GMP/15-SEV-2
Volume 2 of 3

CHEVROLET

Spark Electric Vehicle

GM

SERVICE MANUAL

INCLUDES: Driver Information and Entertainment, Engine/Propulsion, HVAC

2015

DANGER

Danger: In order to reduce the chance of death, personal injury and/or property damage, carefully observe the instructions that follow:

The service manuals of General Motors are intended for use by professional, qualified technicians. Attempting repairs or service without the appropriate training, tools, and equipment could cause death or injury to you or others. This could also damage the vehicle, or cause the vehicle to operate improperly.

Proper vehicle service and repair are important to the safety of the service technician and to the safe, reliable operation of all motor vehicles. If you need to replace a part, use the same part number or an equivalent part. Do not use a replacement part of lesser quality.

The service procedures we recommend and describe in this service manual are effective methods of performing service and repair. Some of the procedures require the use of tools that are designed for specific purposes.

Accordingly, any person who intends to use a replacement part, a service procedure, or a tool that is not recommended by General Motors, must first establish that there is no jeopardy to personal safety or the safe operation of the vehicle.

This manual contains various "Dangers", "Warnings" and "Cautions" that you must observe carefully in order to reduce the risk of personal injury during service or repair. Improper service or repair may damage the vehicle or render the vehicle unsafe. These "Dangers", "Warnings" and "Cautions" are not exhaustive. General Motors can not possibly warn of all the potentially hazardous consequences of your failure to follow these instructions.

This manual covers service procedures to vehicles that are equipped with a Supplemental Inflatable Restraint. Refer to the "Warnings" in Dangers, Warnings and Cautions in Supplemental Inflatable Restraint. Refer to Supplemental Inflatable Restraint component and wiring location views in Supplemental Inflatable Restraint before performing a service on or around Supplemental Inflatable Restraint components or wiring. Failure to follow these "Dangers", "Warnings" and "Cautions" could cause air bag deployment, personal injury, or otherwise unnecessary Supplemental Inflatable Restraint repairs.

In order to help avoid accidental air bag deployment and personal injury, whenever you service a vehicle that requires repair of the Supplemental Inflatable Restraint and another vehicle system, we recommend that you first repair the Supplemental Inflatable Restraint, then go on to the other system.

2015 Chevrolet Spark EV Service Manual

Volume 2

This manual provides information on the diagnosis, the service procedures, the adjustments, and the specifications for the 2015 Chevrolet Spark EV.

The technicians who understand the material in this manual and in the appropriate Dealer Service Bulletins better serve the vehicle owners.

When this manual refers to a brand name, a part number, or a specific tool, you may use an equivalent product in place of the recommended item. All information, illustrations, and specifications in this manual are based on the latest product information available at the time of publication approval. General Motors LLC reserves the right to make changes at any time without notice.

Published by
North American Operations
General Motors LLC
Warren, Michigan 48090

© 2015 GENERAL MOTORS LLC
ALL RIGHTS RESERVED

The information cutoff date is 06/05/15.

LITHO IN U.S.A.

No part of this manual may be reproduced, stored in any retrieval system, or transmitted in any form or by any means including, but not limited to, electronic, mechanical, photocopying, and recording without the prior written permission of General Motors LLC. This applies to all text, illustrations, and tables.

Error and Suggestion Reporting

If you find an error in a GM Service manual, or if you have a suggestion about a GM service manual, we want to hear from you.

When calling, be prepared with the following information:

- Your name
- The name of your dealership
- The phone number of your dealership
- The model year and the vehicle line
- The publication part number, if present
- The vehicle identification number of the vehicle on which you are working
- The service category and page numbers
- Any applicable electronic information element identification numbers
- A descriptive explanation of your concern

The GM service manual phone personnel will respond to your concerns in the following ways:

- By delivering your concern to the author of the information
- By eliciting a response from the author
- By supplying you with an answer to your concerns

For paper manual users: The GM service manual phone personnel will also explain how to send in examples or marked-up pages.

For Electronic Manual users: Be prepared to provide any applicable identification numbers pertaining to the electronic information in question.

The GM service manual comment telephone numbers do not provide technical assistance. For technical assistance, contact your regular technical assistance source.

United States and Canada General Motors Dealer Employees

Please call the following number with your comments: 1-800-828-6860.

You may call Monday through Saturday, 8:00 a.m.– 8:00 p.m. Eastern Time. In order to send a fax, use the following number: 1-248-285-3045.

Canada, French Speaking General Motors Dealer Employees

Please call the following number with your comments: 1-800-503-3222.

You may call Monday through Saturday, 8:00 a.m.– 5:00 p.m. Eastern Time. In order to send a fax, use the following number: 1-248-285-3045.

International English Speaking General Motors Dealer Employees

Please call the following number with your comments: 1-248-285-2590.

You may call Monday through Saturday, 8:00 a.m.– 8:00 p.m. Eastern Time. In order to send a fax, use the following number: 1-248-285-3045.

United States and Canadian Vehicle Owner/Operator

Vehicle owners or operators are encouraged to address their comments and concerns to the applicable Customer Assistance Center. The phone number and address of the Customer Assistance Center are in the Owner's Manual.

Table of Contents

Volume 1

Preface 0-1
Dangers, Warnings, and Cautions 0-3

General Information 1-1
General Information 1-3
Air/Wind Noise 1-30
Maintenance and Lubrication 1-32
Squeaks and Rattles 1-34
Vibration Diagnosis and Correction 1-36
Waterleaks 1-83

Body Hardware and Trim 2-1
Exterior Trim 2-3
Floor Coverings and Headlinings 2-18
Instrument Panel and Console Trim 2-22
Interior Trim and Paneling 2-50

Body Repair 3-1
Bolted Exterior Body Panels and Closures 3-3
Bumpers and Fascias 3-47
Collision Repair 3-68
Frame and Underbody 3-118
Paint and Coatings 3-141
Plastic Panel Information and Repair 3-144

Body Systems 4-1
Fixed and Moveable Windows 4-5
Horns 4-55
Lighting 4-66
Mirrors 4-202
Vehicle Access 4-218
Wipers and Washers 4-286

Brakes 5-1
Antilock Brake System 5-5
Disc Brakes 5-96
Hydraulic Brakes 5-133
Park Brake 5-220

Diagnostic Overview, Starting Point, and Programming 6-1
Programming and Setup 6-3
Vehicle Diagnostic Information 6-20

Driveline/Axle 7-1
Wheel Drive Shafts 7-3

INDEX INDEX-1

Volume 2

Preface 0-1
Dangers, Warnings, and Cautions 0-3

Driver Information and Entertainment 8-1
Cellular, Entertainment, and Navigation 8-3
Displays and Gauges 8-76
Secondary and Configurable Customer Controls 8-102

Engine/Propulsion 9-1
12 V Starting and Charging 9-7
Cruise Control 9-38
Hybrid/EV Controls 9-53
Hybrid/EV Battery Heating and Cooling 9-198
Hybrid/EV Energy Storage 9-347
Plug-In Charging 9-552

HVAC 10-1
Heating, Ventilation, and Air Conditioning 10-3
HVAC - Automatic 10-80

INDEX INDEX-1

Volume 3

Preface 0-1
Dangers, Warnings, and Cautions 0-3

Power and Signal Distribution 11-1
Data Communications 11-5
Power Outlets 11-244
Wiring Systems and Power Management 11-251

Safety and Security 12-1
Immobilizer 12-3
Object Detection and Pedestrian Protection 12-35
Remote Functions 12-54
Seat Belts 12-81
Supplemental Inflatable Restraints 12-100
Theft Deterrent 12-185

Seats 13-1
Seat Hardware, Trim, and Upholstery 13-3
Seat Heating and Cooling 13-27

Steering 14-1
Power Steering 14-3
Steering Wheel and Column 14-24

Suspension 15-1
Front Suspension 15-3
Rear Suspension 15-19
Suspension General Diagnosis 15-28
Tire Pressure Monitoring 15-37
Tires and Wheels 15-48
Wheel Alignment 15-63

Transmission 16-1
Automatic Transmission - 1ET35 16-3
Shift Lock Control 16-98
Transmission Cooling 16-105

INDEX INDEX-1

Section 0

Dangers, Warnings, and Cautions

Dangers, Warnings, and Cautions 0-3
Definition of Danger, Warning, Caution, and Note 0-3
Approved Equipment for Collision Repair Warning 0-3
Assistant Driving Warning 0-3
Batteries Produce Explosive Gases Warning 0-3
Battery Disconnect Warning 0-4
Brake Dust Warning 0-4
Brake Fluid Irritant Warning 0-4
Brake Fluid Warning 0-4
Checking Hot Transmission Fluid through Drain Plug Hole Warning 0-4
Collision Sectioning Warning 0-4
Cracked Window Warning 0-4
Defroster Outlet Warning 0-4
Electric Coolant Fan Warning 0-4
Exhaust Service Warning 0-4
Eye Protection Warning 0-4
Glass and Sheet Metal Handling Warning 0-5
Halogen Bulb Warning 0-5
Hood Hold-Open Device Warning 0-5
Moving Parts and Hot Surfaces Warning 0-5
Parking Brake and Drive Wheels Warning 0-5
Protective Goggles and Glove Warning 0-5
R-1234yf Proper Service Procedures Warning ... 0-5
Radiator Cap Removal Warning 0-5
Relieving Fuel Pressure Warning 0-5
Repair Material Curing Warning 0-5
Road Test Warning 0-5
Safety Glasses and Compressed Air Warning ... 0-5
Safety Glasses Warning 0-5
Sensing and Diagnostic Module Handling Warning 0-6
Sensing and Diagnostic Module Voltage after Ignition is Turned Off Warning 0-6
Servicing the SIR System Warning 0-6
SIR Deployed Inflator Modules Are Hot Warning 0-6
SIR Inflatable Module Deployment Outside Vehicle Warning 0-6
SIR Inflator Module Disposal Warning 0-6
SIR Inflator Module Handling and Storage Warning 0-6
SIR Seatbelt Pretensioner Handling Warning 0-6
SIR Warning 0-7
Torque-to-Yield Fastener Warning 0-7
Work Stall Test Warning 0-7
Air Conditioning Compressor Support Caution ... 0-7
Air in the Power Steering System Caution 0-7
Avoid Damage to Grid Lines Caution 0-7
Belt Dressing Caution 0-7
Brake Caliper Caution 0-7
Brake Fluid Damage to Electrical Connections Caution 0-7
Brake Fluid Effects on Paint and Electrical Components Caution 0-7
Catalytic Converter Movement Caution 0-8
Clearcoat/Ultraviolet Screeners Caution 0-8
Clutch Actuator Cylinder Mounting Sleeve Caution 0-8
Clutch Hydraulic System Lubricant Caution 0-8
Component Fastener Tightening Caution 0-8
Compressed Air Should Not Exceed 98 kPa (14 psi) Caution 0-8
Drive Axle Caution 0-8
Engine Coolant Thermostat Housing Caution 0-8
Engine Lifting Caution 0-8
Engine Mounting Caution 0-8
Exterior Trim Emblem Removal Caution 0-8
Fastener Caution 0-8
Filling the Master Cylinder Caution 0-8
Flex Decoupler Caution 0-8
HVAC Module Drain Tube Caution 0-9
Ignition OFF When Disconnecting Battery Caution 0-9
Installing Hoses without Twists or Bends Caution 0-9
Liftgate Assist Rod Caution 0-9
Power Steering Hose Disconnected Caution 0-9
Refrigerant Pressure During Testing Caution 0-9
Steering Column in Lock Position Caution 0-9
Steering Wheel in the Full Turn Position Caution 0-9
Steering Wheel Straight and Column Locked Caution 0-9
Test Probe Caution 0-9

Three-Way Catalytic Converter Damage Caution 0-10
Torque-to-Yield Fastener Caution 0-10
Using Proper Power Steering Fluid Caution 0-10
Vehicle Lifting and Jacking Caution 0-10
Windshield Installation Caution 0-10

Dangers, Warnings, and Cautions

Definition of Danger, Warning, Caution, and Note

The diagnosis and repair procedures in a GM Service Manual contain both general and specific Dangers, Warnings, Cautions, Notes or Importants. GM is dedicated to the presentation of service information that helps the technician to diagnose and repair the systems necessary for the proper operation of the vehicle, however, certain procedures may present a hazard to the technician if they are not followed in the recommended manner . Dangers, Warnings, Cautions and Notes or Importants are elements designed to prevent these hazards, however, not all hazards can be foreseen. This information is placed at strategic locations within the service manual. This information is designed to prevent the following from occurring:

- Serious bodily injury or death to the technician
- Damage to the vehicle
- Unnecessary vehicle repairs
- Unnecessary component replacement
- Improper repair or replacement of vehicle components.
- Any warning or caution that appears in this service category is referenced from the individual service categories.

DANGER Defined

When encountering a DANGER, you will be asked to take a necessary action or not to take a prohibited action. If a DANGER is not heeded, the following consequences may occur:

- Serious bodily injury or death to the technician
- Serious bodily injury or death to other technicians in the workplace area

WARNING Defined

When encountering a WARNING, you will be asked to take a necessary action or not to take a prohibited action. If a WARNING is not heeded, the following consequences may occur:

- Serious bodily injury to the technician
- Serious bodily injury to other technicians in the workplace area
- Serious bodily injury to the driver and/or passenger(s) of the vehicle, if the vehicle has been improperly repaired

CAUTION Defined

CAUTIONS call special attention to a necessary action or to a prohibited action. If a CAUTION is not heeded, the following consequences may occur:

- Damage to the vehicle
- Unnecessary vehicle repairs
- Unnecessary component replacement
- Improper operation or performance of the system or component under repair
- Damage to any systems or components which are dependent upon the proper operation of the system or component under repair
- Improper operation or performance of any systems or components which are dependent upon the proper operation or performance of the system or component under repair
- Damage to fasteners, basic tools, or special tools
- The leakage of coolant, lubricant, or other vital fluids

NOTE or IMPORTANT Defined

NOTE and IMPORTANT statements emphasize a necessary characteristic of a diagnostic or repair procedure. NOTE or IMPORTANT statements are designed to do the following:

- Clarify a procedure
- Present additional information for accomplishing a procedure
- Give insight into the reason or reasons for performing a procedure in the manner recommended
- Present information that will help to accomplish a procedure in a more effective manner
- Present information that gives the technician the benefit of past experience in accomplishing a procedure with greater ease

Approved Equipment for Collision Repair Warning

Warning: To avoid personal injury when exposed to welding flashes or to galvanized (Zinc Oxide) metal toxic fumes while grinding/cutting on any type of metal or sheet molded compound, you must work in a properly ventilated area, wearing an approved respirator, eye protection , earplugs, welding gloves, and protective clothing.

Assistant Driving Warning

Warning: An assistant should drive the vehicle while the technician checks for the location of the reported condition. Otherwise, personal injury could result.

Batteries Produce Explosive Gases Warning

Warning: Batteries produce explosive gases. Batteries contain corrosive acid. Batteries supply levels of electrical current high enough to cause burns. Therefore, in order to reduce the risk of personal injury while working near a battery, observe the following guidelines:

- ***Always shield your eyes.***
- ***Avoid leaning over the battery whenever possible.***
- ***Do not expose the battery to open flames or sparks.***

- *Do not allow battery acid to contact the eyes or the skin.*
  - *Flush any contacted areas with water immediately and thoroughly.*
  - *Get medical help.*

Battery Disconnect Warning

Warning: Unless directed otherwise, the ignition must be OFF with the key removed, and all electrical loads must be OFF before servicing any electrical component. Disconnect the negative battery cable to prevent an electrical spark should a tool or equipment come in contact with an exposed electrical terminal. Failure to follow these precautions may result in personal injury and/or damage to the vehicle or its components.

For Vehicles equipped with OnStar® (UE1) with Back Up Battery:

The Back Up Battery is a redundant power supply to allow limited OnStar® functionality in the event of a main vehicle battery power disruption to the VCIM (OnStar®module). Do not disconnect the main vehicle battery or remove the OnStar® fuse with the ignition key in any position other than OFF. Retained accessory power should be allowed to time out or be disabled (simply opening the driver door should disable retained accessory power) before disconnecting power. Disconnecting power to the OnStar® module in any way while the ignition is On or with retained accessory power activated may cause activation of the OnStar® Back-Up Battery system and will discharge and permanently damage the back-up battery. Once the Back-Up Battery is activated it will stay on until it has completely discharged. The back-up battery is not rechargeable and once activated the back-up battery must be replaced.

Brake Dust Warning

Warning: Avoid taking the following actions when you service wheel brake parts:

- *Do not grind brake linings.*
- *Do not sand brake linings.*
- *Do not clean wheel brake parts with a dry brush or with compressed air.*

Some models or aftermarket brake parts may contain asbestos fibers which can become airborne in dust. Breathing dust with asbestos fibers may cause serious bodily harm. Use a water-dampened cloth in order to remove any dust on brake parts. Equipment is available commercially in order to perform this washing function. These wet methods prevent fibers from becoming airborne.

Brake Fluid Irritant Warning

Warning: Brake fluid may irritate eyes and skin. In case of contact, take the following actions:

- *Eye contact—rinse thoroughly with water.*
- *Skin contact—wash with soap and water.*
- *If ingested—consult a physician immediately.*

Brake Fluid Warning

Warning: Use only Delco Supreme 11, GM P/N 12377967 (Canadian P/N 992667), or equivalent DOT 3 brake fluid from a clean, sealed container. Do not use fluid from an open container that may be contaminated with water. Improper or contaminated fluid could result in damage to components, or loss of braking, with possible injury.

Checking Hot Transmission Fluid through Drain Plug Hole Warning

Warning: The engine must be running when the transmission fluid fill plug is removed, or excessive fluid loss will occur. Transmission fluid may be hot. Since the actual fluid level is unknown, stand clear when removing the fill plug. Have a container ready to capture any lost fluid. Do not turn the engine off with the fill plug removed, as you can be injured by hot transmission fluid being expelled out of the oil fill opening.

Collision Sectioning Warning

Warning: Sectioning should be performed only in the recommended areas. Failure to do so may compromise the structural integrity of the vehicle and cause personal injury if the vehicle is in a collision.

Cracked Window Warning

Warning: If a window is cracked but still intact, crisscross the window with masking tape in order to reduce the risk of damage or personal injury.

Defroster Outlet Warning

Warning: If broken glass falls into the defroster outlets, it can be blown into the passenger compartment and cause personal injury.

Electric Coolant Fan Warning

Warning: An electric fan under the hood can start up even when the engine is not running and can injure you. Keep hands, clothing and tools away from any underhood electric fan.

Exhaust Service Warning

Warning: In order to avoid being burned, do not service the exhaust system while it is still hot. Service the system when it is cool.

Eye Protection Warning

Warning: Approved safety glasses and gloves should be worn when performing this procedure to reduce the chance of personal injury.

Glass and Sheet Metal Handling Warning

Warning: When working with any type of glass or sheet metal with exposed or rough edges, wear approved safety glasses and gloves in order to reduce the chance of personal injury.

Halogen Bulb Warning

Warning: Halogen bulbs contain gas under pressure. Handling a bulb improperly could cause it to shatter into flying glass fragments. To help avoid personal injury:

- ***Turn off the lamp switch and allow the bulb to cool before changing the bulb.***
- ***Leave the lamp switch OFF until the bulb change is complete.***
- ***Always wear eye protection when changing a halogen bulb.***
- ***Handle the bulb only by its base. Avoid touching the glass.***
- ***Keep dirt and moisture off the bulb.***
- ***Properly dispose of the used bulb.***
- ***Keep halogen bulbs out of the reach of children.***

Hood Hold-Open Device Warning

Warning: When a hood hold open device is being removed or installed, provide alternate support to avoid the possibility of damage to the vehicle or personal injury.

Moving Parts and Hot Surfaces Warning

Warning: Avoid contact with moving parts and hot surfaces while working around a running engine in order to prevent physical injury.

Parking Brake and Drive Wheels Warning

Warning: Apply the parking brake and block the drive wheels before performing this procedure in order to prevent bodily injury.

Protective Goggles and Glove Warning

Warning: Always wear protective goggles and gloves when removing exhaust parts as falling rust and sharp edges from worn exhaust components could result in serious personal injury.

R-1234yf Proper Service Procedures Warning

Warning: For personal safety, proper service procedure and refrigerant handling guidelines reference the applicable SAE standards when servicing vehicles equipped with R-1234yf refrigerant systems. Reference SAE J639, SAE J2845, SAE J2842, SAE J2843 & SAE J2851. Failure to follow these precautions may cause personal injury and/or damage to the vehicle or its components.

Radiator Cap Removal Warning

Warning: To avoid being burned, do not remove the radiator cap or surge tank cap while the engine is hot. The cooling system will release scalding fluid and steam under pressure if radiator cap or surge tank cap is removed while the engine and radiator are still hot.

Relieving Fuel Pressure Warning

Warning: Remove the fuel tank cap and relieve the fuel system pressure before servicing the fuel system in order to reduce the risk of personal injury. After you relieve the fuel system pressure, a small amount of fuel may be released when servicing the fuel lines, the fuel injection pump, or the connections. In order to reduce the risk of personal injury, cover the fuel system components with a shop towel before disconnection. This will catch any fuel that may leak out. Place the towel in an approved container when the disconnection is complete.

Repair Material Curing Warning

Warning: At least 24 hours are required for complete curing of repair material. The repair area should not be physically disturbed until after that time. Insufficient curing of urethane adhesive may allow unrestrained occupants to be ejected from the vehicle resulting in personal injury.

Road Test Warning

Warning: Road test a vehicle under safe conditions and while obeying all traffic laws. Do not attempt any maneuvers that could jeopardize vehicle control. Failure to adhere to these precautions could lead to serious personal injury and vehicle damage.

Safety Glasses and Compressed Air Warning

Warning: Wear safety glasses when using compressed air in order to prevent eye injury.

Safety Glasses Warning

Warning: Wear safety glasses in order to avoid eye damage.

Sensing and Diagnostic Module Handling Warning

Warning: Be careful when you handle a sensing and diagnostic module (SDM). Do not strike or jolt the SDM. Before applying power to the SDM:

- ***Remove any dirt, grease, etc. from the mounting surface***
- ***Position the SDM horizontally on the mounting surface***
- ***Point the arrow on the SDM toward the front of the vehicle***
- ***Tighten all of the SDM fasteners and SDM bracket fasteners to the specified torque value***

Failure to follow the correct procedure could cause air bag deployment, personal injury, or unnecessary SIR system repairs.

Sensing and Diagnostic Module Voltage after Ignition is Turned Off Warning

Warning: The sensing and the diagnosis module (SDM) can maintain sufficient voltage to deploy the airbags and pretensioners for up to 1 minute after the ignition has been turned OFF and the fuse has been removed. If the airbags and pretensioners are not disconnected, do not begin service until one minute has been passed after disconnecting power to the SDM. Failure to do so may cause personal injury.

Servicing the SIR System Warning

Warning: When performing service on or around the SIR components or the SIR wiring, follow the procedures listed below in order to temporarily disable the SIR system. Failure to follow the procedures could result in the following:

- ***Air bag deployment***
- ***Personal injury***
- ***Otherwise unneeded SIR system repairs***

SIR Deployed Inflator Modules Are Hot Warning

Warning: After deployment, the metal surfaces of the SIR component may be very hot. To help avoid a fire or personal injury:

- ***Allow sufficient time for cooling before touching any metal surface of the SIR component.***
- ***Do not place the deployed SIR component near any flammable objects.***

SIR Inflatable Module Deployment Outside Vehicle Warning

Warning: When you are deploying an inflator module for disposal, perform the deployment procedures in the order listed. Failure to follow the procedures in the order listed may result in personal injury.

SIR Inflator Module Disposal Warning

Warning: In order to prevent accidental deployment and the risk of personal injury, do not dispose of an undeployed inflator module as normal shop waste. Undeployed inflator modules contain substances that could cause severe illness or personal injury if their sealed containers are damaged during disposal. Use the following deployment procedures to safely dispose of an undeployed inflator module. Failure to observe the following disposal methods may be a violation of federal, state, or local laws.

SIR Inflator Module Handling and Storage Warning

Warning: When carrying an undeployed inflator module:

- ***Do not carry the inflator module by the wires or connector.***
- ***Make sure the air bag opening points away from you.***

When storing an undeployed inflator module:

- ***Make sure the air bag opening points away from the surface on which the inflator module rests.***
- ***Provide free space for the air bag to expand in case of an accidental deployment.***
- ***When storing a steering column, do not rest the column with the air bag opening facing down and the column vertical. Lay the column on its side.***

Failure to observe these guidelines may result in personal injury.

SIR Seatbelt Pretensioner Handling Warning

Warning: When carrying an undeployed inflatable restraint seat belt retractor pretensioner:

- ***Do not carry the seat belt pretensioner by the seat belt webbing or pigtail connector, if equipped.***
- ***Carry the seat belt pretensioner by the housing, keeping hands and fingers away from the seat belt webbing.***
- ***Make sure the opening, from which the seat belt webbing extends, faces downward and the seat belt webbing hangs freely.***

Failure to observe these guidelines may result in personal injury.

SIR Warning

Warning: This vehicle is equipped with a Supplemental Inflatable Restraint (SIR) System. Failure to follow the correct procedure could cause the following conditions:

- ***Air bag deployment***
- ***Personal injury***
- ***Unnecessary SIR system repairs***

In order to avoid the above conditions, observe the following guidelines:

- ***Refer to Master Electrical Components List in order to determine if you are performing service on or near the SIR components or the SIR wiring.***
- ***If you are performing service on or near the SIR components or the SIR wiring, disable the SIR system. Refer to Disabling the SIR System.***

Torque-to-Yield Fastener Warning

Warning: This vehicle is equipped with torque-to-yield or single use fasteners. Install a NEW torque-to-yield or single use fastener when installing this component. Failure to replace the torque-to-yield or single use fasteners could cause damage to the vehicle, component, or bodily injury.

Work Stall Test Warning

Warning: One or more of the following guidelines may apply when performing specific required tests in the work stall:

- ***When a test requires spinning the drive wheels with the vehicle jacked up, adhere to the following precautions:***
  - ***Do not exceed 56 km/h (35 mph) when spinning one drive wheel with the other drive wheel stopped. This limit is necessary because the speedometer indicates only one-half the actual vehicle speed under these conditions. Personal injury may result from excessive wheel spinning.***
  - ***If all of the drive wheels are spinning at the same speed, do not exceed 112 km/h (70 mph). Personal injury may result from excessive wheel spinning.***
  - ***All persons should stay clear of the rotating components and the balance weight areas in order to avoid possible personal injury.***
  - ***When running an engine in the repair stall for an extended period of time, use care not to overheat the engine and the transmission.***
- ***When a test requires jacking up the vehicle and running with the wheels and brake rotors removed, adhere to the following precautions:***
  - ***Support the suspension at normal ride height.***
  - ***Do not apply the brake with the brake rotors removed.***
  - ***Do not place the transmission in PARK with the drive axles spinning.***
  - ***Turn Off the ignition in order to stop the powertrain components from spinning.***
- ***When running an engine in the work stall, use the exhaust removal system to prevent breathing dangerous gases.***

Air Conditioning Compressor Support Caution

Caution: Ensure the air conditioning compressor is supported by a table or work area sturdy enough to handle the weight. Do not use the hoses to support the compressor. Using the compressor hoses to bear the weight of the compressor may damage the air conditioning compressor/hoses and in turn may cause a refrigerant leak. The hoses are not designed to support the weight of the air conditioning compressor.

Air in the Power Steering System Caution

Caution: If the power steering system has been serviced, an accurate fluid level reading cannot be obtained unless air is bled from the steering system. The air in the fluid may cause pump cavitation noise and may cause pump damage over a period of time.

Avoid Damage to Grid Lines Caution

Caution: If you use a razor blade or other sharp tool in order to remove the adhesives or foreign objects from the inside of the rear window, use the blade carefully. Damage to the grid lines may result.

Belt Dressing Caution

Caution: Do not use belt dressing on the drive belt. Belt dressing causes the breakdown of the composition of the drive belt. Failure to follow this recommendation will damage the drive belt.

Brake Caliper Caution

Caution: Support the caliper with a piece of wire to prevent damage to the brake line.

Brake Fluid Damage to Electrical Connections Caution

Caution: Brake fluid will damage electrical connections and painted surfaces. Use shop cloths, suitable containers, and fender covers to prevent brake fluid from contacting these areas. Always re-seal and wipe off brake fluid containers to prevent spills.

Brake Fluid Effects on Paint and Electrical Components Caution

Caution: Avoid spilling brake fluid onto painted surfaces, electrical connections, wiring, or cables. Brake fluid will damage painted surfaces and cause corrosion to electrical components. If any brake fluid comes in contact with painted surfaces, immediately

flush the area with water. If any brake fluid comes in contact with electrical connections, wiring, or cables, use a clean shop cloth to wipe away the fluid.

Catalytic Converter Movement Caution

Caution: To prevent internal damage to the flexible coupling of the catalytic converter assembly, the converter must be supported. The vertical movement at the rear of the catalytic converter assembly must not exceed 6 degrees up or down.

Clearcoat/Ultraviolet Screeners Caution

Caution: Removing more than 0.5 mils of the clearcoat can result in early paint failure. The clearcoat contains ultraviolet screeners. Do not finesse sand more than what is required to remove the defect.

Clutch Actuator Cylinder Mounting Sleeve Caution

Caution: Use a mounting sleeve when installing the clutch actuator cylinder to the transmission. The transmission input shaft has sharp edges and can damage the clutch actuator cylinder. Failure to follow this caution may cause a leak and damage to the clutch actuator cylinder.

Clutch Hydraulic System Lubricant Caution

Caution: Do not use mineral or paraffin-base oil in the clutch hydraulic system. These fluids may damage the rubber parts in the cylinders.

Component Fastener Tightening Caution

Caution: Replacement components must be the correct part number for the application. Components requiring the use of the thread locking compound, lubricants, corrosion inhibitors, or sealants are identified in the service procedure. Some replacement components may come with these coatings already applied. Do not use these coatings on components unless specified. These coatings can affect the final torque, which may affect the operation of the component. Use the correct torque specification when installing components in order to avoid damage.

Compressed Air Should Not Exceed 98 kPa (14 psi) Caution

Caution: When using compressed air to remove components, air pressure should not exceed 98 kPa (14 psi).

Drive Axle Caution

Caution: Support the lower control arms in the normal horizontal position in order to avoid damage to the drive axles. Do not operate the vehicle in gear with the wheels hanging down at full travel.

Engine Coolant Thermostat Housing Caution

Caution: Use care when performing this procedure. Use of excessive force may damage the coolant thermostat.

Engine Lifting Caution

Caution: When raising or supporting the engine for any reason, do not use a jack under the oil pan, any sheet metal, or the crankshaft pulley. Lifting the engine in an unapproved manner may cause component damage.

Engine Mounting Caution

Caution: Broken engine mountings can cause misalignment of certain drive-train components. Misalignment of drive-train components causes eventual destruction of the drive-train components.

If one engine mount breaks, the rest of the engine mounts will have increased stress put on them. This could cause the rest of the engine mounts to break.

Exterior Trim Emblem Removal Caution

Caution: Use a plastic, flat-bladed tool to prevent paint damage when removing an emblem/name plate.

Fastener Caution

Caution: Use the correct fastener in the correct location. Replacement fasteners must be the correct part number for that application. Do not use paints, lubricants, or corrosion inhibitors on fasteners, or fastener joint surfaces, unless specified. These coatings affect fastener torque and joint clamping force and may damage the fastener. Use the correct tightening sequence and specifications when installing fasteners in order to avoid damage to parts and systems. When using fasteners that are threaded directly into plastic, use extreme care not to strip the mating plastic part(s). Use hand tools only, and do not use any kind of impact or power tools. Fastener should be hand tightened, fully seated, and not stripped.

Filling the Master Cylinder Caution

Caution: When filling the master cylinder, use only Delco Supreme 11, GM P/N 12377967 (Canadian P/N 992667), or equivalent DOT 3 brake fluid. Do not use a container which has been used for petroleum based fluids, or a container which is wet with water. Petroleum based fluids will cause swelling and distortion of rubber parts in the hydraulic brake system, and water will mix with brake fluid, lowering the boiling point. Keep all fluid containers capped to prevent contamination.

Flex Decoupler Caution

Caution: Do not over-flex or damage the flex joint when moving the flex joint from the normal mounting position.

HVAC Module Drain Tube Caution

Caution: Always ensure the HVAC module drain tube is properly installed and secure following a repair. Residual moisture/water can collect inside the HVAC module. The residual moisture or water should not contact electrical modules, electrical connections, wiring, cables or carpeting. Use clean and absorbent shop clothes to protect these components while removing or installing the HVAC module drain tube and/or HVAC module. Moisture/water is a by-product of normal A/C system operation and can result in interior odors or corrosion/damage to electrical components.

Ignition OFF When Disconnecting Battery Caution

Caution: Always turn the ignition OFF when connecting or disconnecting battery cables, battery chargers, or jumper cables. Failing to do so may damage the Powertrain Control Module (PCM) or other electronic components.

Installing Hoses without Twists or Bends Caution

Caution: The inlet and outlet hoses must not be twisted during installation. Do not bend or distort the inlet or outlet hoses to make installation easier. Failure to follow these procedures could result in component damage.

Liftgate Assist Rod Caution

Caution: Apply pressure only at the end of the liftgate/hood assist rod that you are removing or attaching. Do NOT apply pressure to the middle of the rod because damage or bending will result.

Power Steering Hose Disconnected Caution

Caution: Do not start the vehicle with any power steering gear inlet or outlet hoses disconnected. When disconnected, plug or cap all openings of components. Failure to do so could result in contamination or loss of power steering fluid and damage to the system.

Refrigerant Pressure During Testing Caution

Caution: Leak detection shall only be done with the refrigerant that is specified for the system. Do not attempt to increase pressure of the A/C refrigerant system with shop air or another type of refrigerant. Failure to follow the above guidelines could result in damage to the vehicle or its components.

Steering Column in Lock Position Caution

Caution: With wheels of the vehicle facing straight ahead, secure the steering wheel utilizing steering column anti-rotation pin, steering column lock, or a strap to prevent rotation. Locking of the steering column will prevent damage and a possible malfunction of the SIR system. The steering wheel must be secured in position before disconnecting the following components:

- The steering column
- The steering shaft coupling
- The intermediate shaft(s)

After disconnecting these components, do not rotate the steering wheel or move the front tires and wheels. Failure to follow this procedure may cause the SIR coil assembly to become un-centered and cause possible damage to the SIR coil. If you think the SIR coil has became un-centered, refer to your specific SIR coil's centering procedure to re-center SIR Coil.

Steering Wheel in the Full Turn Position Caution

Caution: Do not hold the steering wheel in the full turn position longer than 5 seconds, as damage to the steering pump may result.

Steering Wheel Straight and Column Locked Caution

Caution: With wheels of the vehicle facing straight ahead, secure the steering wheel utilizing steering column anti-rotation pin, steering column lock, or a strap to prevent rotation. Locking of the steering column will prevent damage and a possible malfunction of the SIR system. The steering wheel must be secured in position before disconnecting the following components:

- The steering column
- The intermediate shaft(s)
- The steering gear

After disconnecting these components, do not rotate the steering wheel or move the front tires and wheels. Failure to follow this procedure may cause the SIR coil assembly to become un-centered and cause possible damage to the SIR coil. If you think the SIR coil has became un-centered, refer to your specific SIR coil's centering procedure to re-center SIR Coil.

Test Probe Caution

Caution: Do not insert test equipment probes (DMM etc.) into any connector or fuse block terminal. The diameter of the test probes will deform most terminals. A deformed terminal will cause a poor connection, which will result in a system failure. Always use the J-35616-F GM Approved Terminal Release Tool Kit in order to front probe terminals. Do not use paper clips or other substitutes to probe terminals.

When using the J-35616-F GM Approved Terminal Release Tool Kit , ensure the terminal test adapter choice is the correct size for the connector terminal. Do not visually choose the terminal test adapter because some connector terminal cavities may appear larger than the actual terminal in the cavity. Using a larger terminal test adapter will damage the terminal. Refer to the J-35616-F GM Approved Terminal Release Tool Kit label on the inside of the J-35616-F GM Approved Terminal Release Tool Kit for the correct adapter along with the connector end view for terminal size.

Three-Way Catalytic Converter Damage Caution

Caution: In order to avoid damaging the replacement three-way catalytic converter, correct the engine misfire or mechanical fault before replacing the three-way catalytic converter.

Torque-to-Yield Fastener Caution

Caution: This vehicle is equipped with torque-to-yield or single use fasteners. Install a NEW torque-to-yield or single use fastener when installing this component. Failure to replace the torque-to-yield or single use fastener could cause damage to the vehicle or component.

Using Proper Power Steering Fluid Caution

Caution: When adding fluid or making a complete fluid change, always use the proper power steering fluid. Failure to use the proper fluid will cause hose and seal damage and fluid leaks.

Vehicle Lifting and Jacking Caution

Caution: Perform the following steps before beginning any vehicle lifting or jacking procedure:

- Remove or secure all of the vehicle contents in order to avoid any shifting or any movement that may occur during the vehicle lifting or jacking procedure.
- The lifting equipment or the jacking equipment weight rating must meet or exceed the weight of the vehicle and any vehicle contents.
- The lifting equipment or the jacking equipment must meet the operational standards of the lifting equipment or jacking equipment manufacturer.
- Perform the vehicle lifting or jacking procedure on a clean, hard, dry, level surface.
- Perform the vehicle lifting or jacking procedure only at the identified lift points. DO NOT allow the lifting equipment or jacking equipment to contact any other vehicle components.

Failure to perform the previous steps could result in damage to the lifting equipment or the jacking equipment, the vehicle, and/or the vehicle contents.

Windshield Installation Caution

Caution: Do not use spacers when installing a windshield. The stress caused by the spacers may damage the windshield.

Section 8

Driver Information and Entertainment

Cellular, Entertainment, and Navigation 8-3
Specifications 8-3
Fastener Tightening Specifications 8-3
Schematic and Routing Diagrams 8-3
Radio/Navigation System Schematics 8-4
OnStar/Telematics Schematics 8-6
Cellular Telephone Schematics 8-7
Diagnostic Information and Procedures 8-8
DTC B1025, B1035, B1045, or B1055 8-8
DTC B125A 8-10
DTC B125B 8-12
DTC B125C 8-14
DTC B1271 8-16
DTC B1446 or B1447 8-17
DTC B2455 8-19
DTC B2462 8-21
DTC B2470 8-24
DTC B2476 or B2482 8-26
Symptoms - Cellular Communication 8-28
Symptoms - Entertainment 8-28
Application Malfunction 8-28
Auxiliary Audio Input Malfunction 8-30
Bluetooth Malfunction 8-33
Digital Radio Poor or No Reception 8-34
OnStar Microphone Malfunction 8-36
OnStar Audio Malfunction 8-37
No Global Positioning System (GPS) Reception 8-39
OnStar Button LED Malfunction 8-42
OnStar Call Center Remote Function Requests Malfunction 8-44
OnStar Button Malfunction 8-45
OnStar Steering Wheel Control Functions Malfunction 8-47
Radio Poor Reception 8-47
Speaker Replacement Reference 8-49
Speaker Malfunction 8-49
Unable to Contact OnStar Call Center 8-51
OnStar Voice Recognition Malfunction 8-52
Repair Instructions 8-53
Mobile Telephone Microphone Replacement ... 8-53
Communication Center Call Switch Replacement 8-54
Communication Interface Module Replacement 8-55
Communication Interface Module Battery Replacement 8-56
Radio Replacement 8-57
Multimedia Receptacle Replacement 8-58
Radio Antenna Base Replacement 8-59
Radio Antenna Replacement 8-60
Radio Front Speaker Replacement 8-61
Radio Rear Speaker Replacement 8-62
Radio Control Switch Replacement 8-63
Description and Operation 8-63
OnStar Description and Operation 8-63
Radio/Audio System Description and Operation 8-69
Special Tools and Equipment 8-73
Special Tools (MIT Tool Instructions) 8-74

Displays and Gauges 8-76
Specifications 8-76
Fastener Tightening Specifications 8-76
Ambient Air Temperature Sensor Resistance ... 8-76
Schematic and Routing Diagrams 8-76
Instrument Cluster Schematics 8-77
Driver Information System Schematics 8-78
Audible Warnings Schematics 8-80
Diagnostic Information and Procedures 8-81
DTC B0158 8-81
DTC B0550 8-83
DTC B124F 8-84
Symptoms - Displays and Gauges 8-84
Chime Malfunction 8-85
Driver Information Center Switch Malfunction - DTC B3567 8-86
Instrument Cluster Gauges Malfunction 8-87
Instrument Cluster Display Malfunction 8-88
Leaf Button Malfunction 8-89
Speedometer and/or Odometer Malfunction 8-90
Repair Instructions 8-92
Ambient Air Temperature Gauge Sensor Replacement 8-92
Driver Information Display Switch Replacement 8-93
Information Center Telltale Assembly Replacement 8-94
Instrument Cluster Replacement 8-95

Instrument Cluster Rear Cover Replacement ... 8-96
Battery Charge Indicator Replacement 8-97
Fuel Economy Switch Replacement 8-98
Description and Operation 8-98
Audible Warnings Description and Operation ... 8-98
Driver Information Center (DIC) Description and Operation 8-100
Indicator/Warning Message Description and Operation 8-100
Instrument Cluster Description and Operation 8-101
Secondary and Configurable Customer Controls 8-102
Schematic and Routing Diagrams 8-102
Steering Wheel Secondary/Configurable Control Schematics 8-103
Diagnostic Information and Procedures 8-104
DTC B1405 8-104
DTC B1529 8-106
DTC B3622 8-108
Symptoms - Secondary and Configurable Customer Controls 8-109
Steering Wheel Controls Malfunction 8-110
Description and Operation 8-112
Steering Wheel Controls Description and Operation 8-112

Cellular, Entertainment, and Navigation

Specifications

Fastener Tightening Specifications

Application	Specification	
	Metric	English
Communication Interface Module Battery Fastener	5.5 N•m	49 lb in
Communication Interface Module Fastener	5.5 N•m	49 lb in
Radio Antenna Base Fastener	9 N•m	80 lb in
Radio Rear Speaker Screw	3 N•m	27 lb in

Schematic and Routing Diagrams

Radio/Navigation System Schematics (Power, Ground, Serial Data, Antenna, and Audio Input)

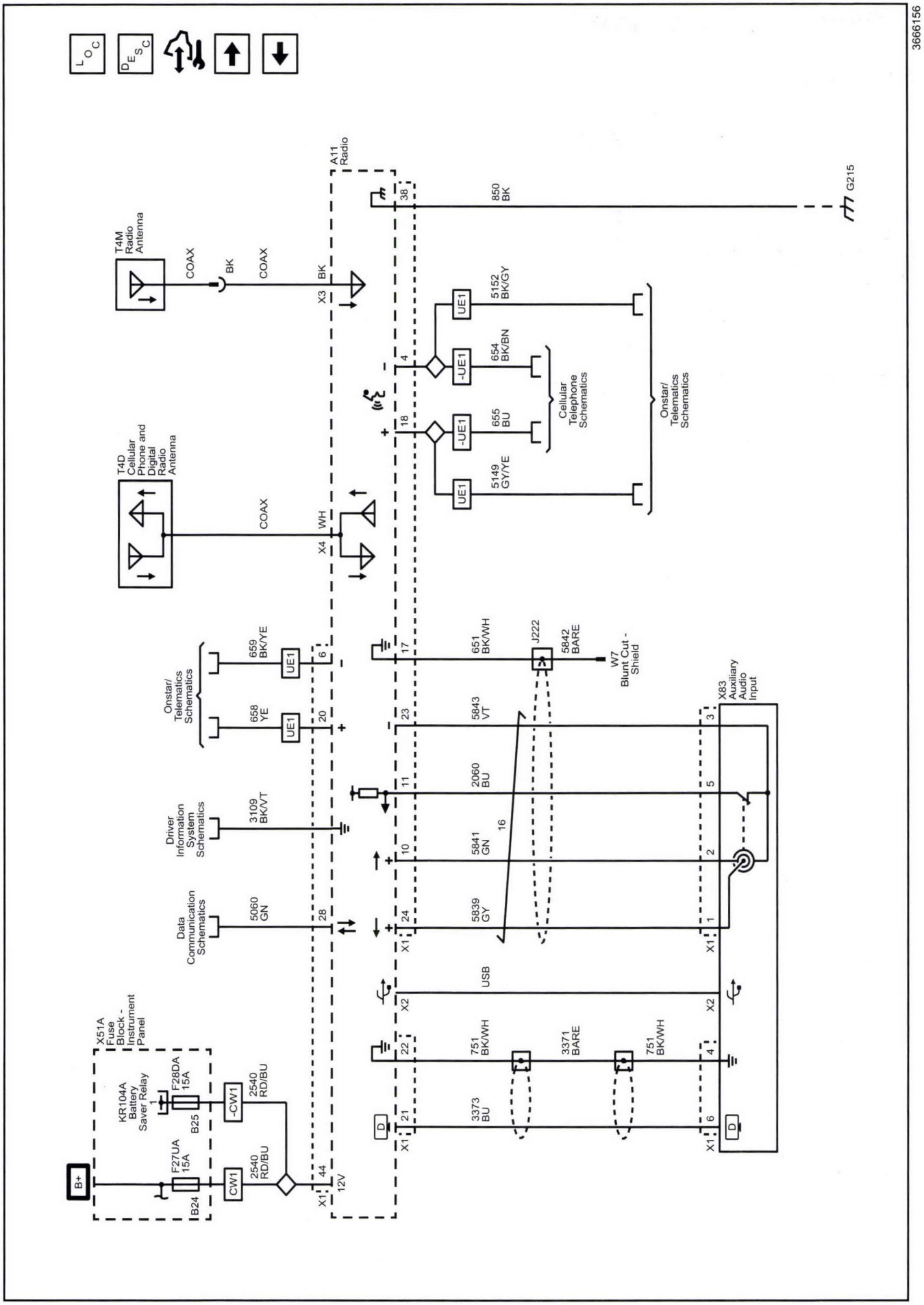

Radio/Navigation System Schematics (Speakers)

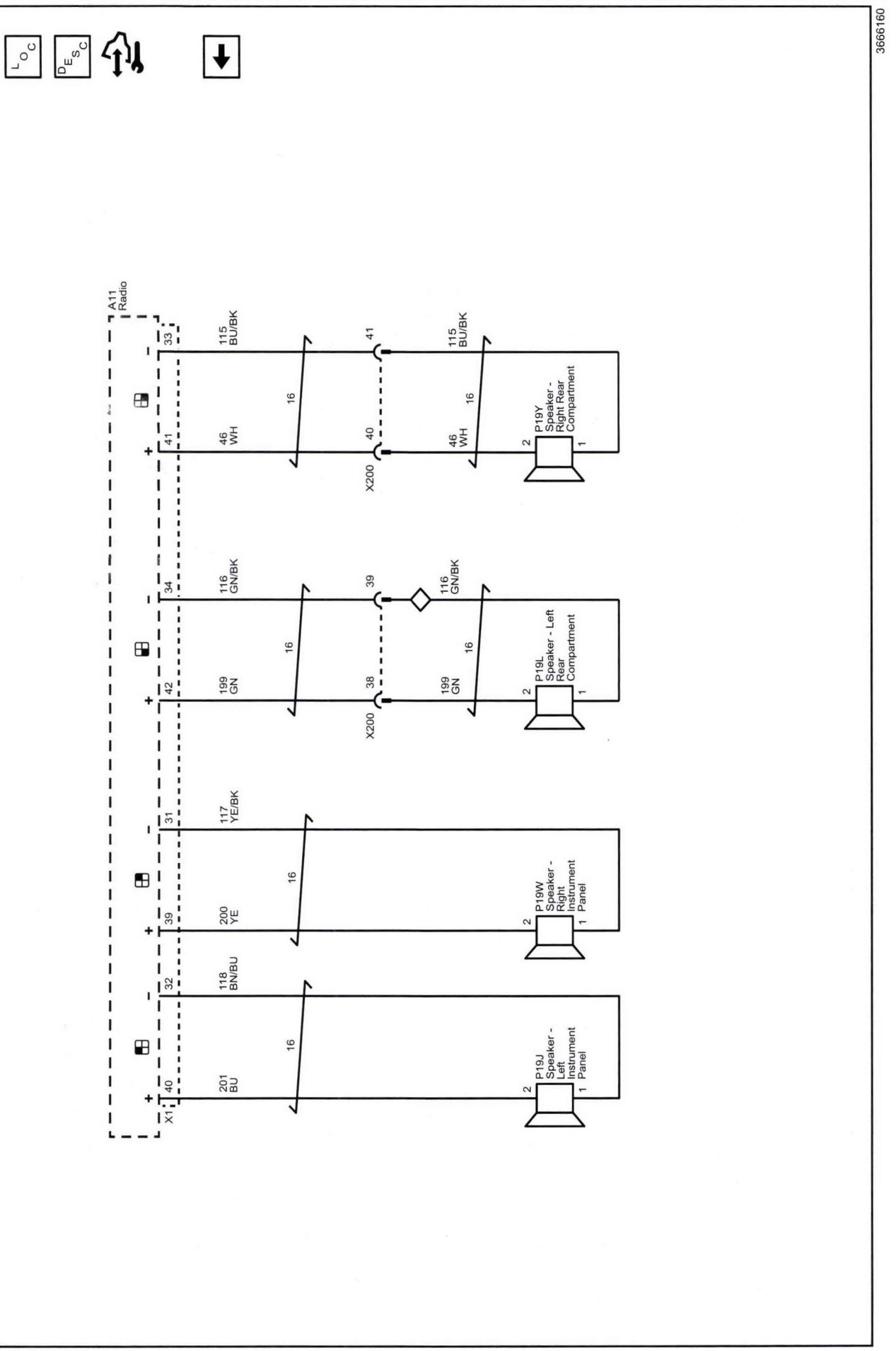

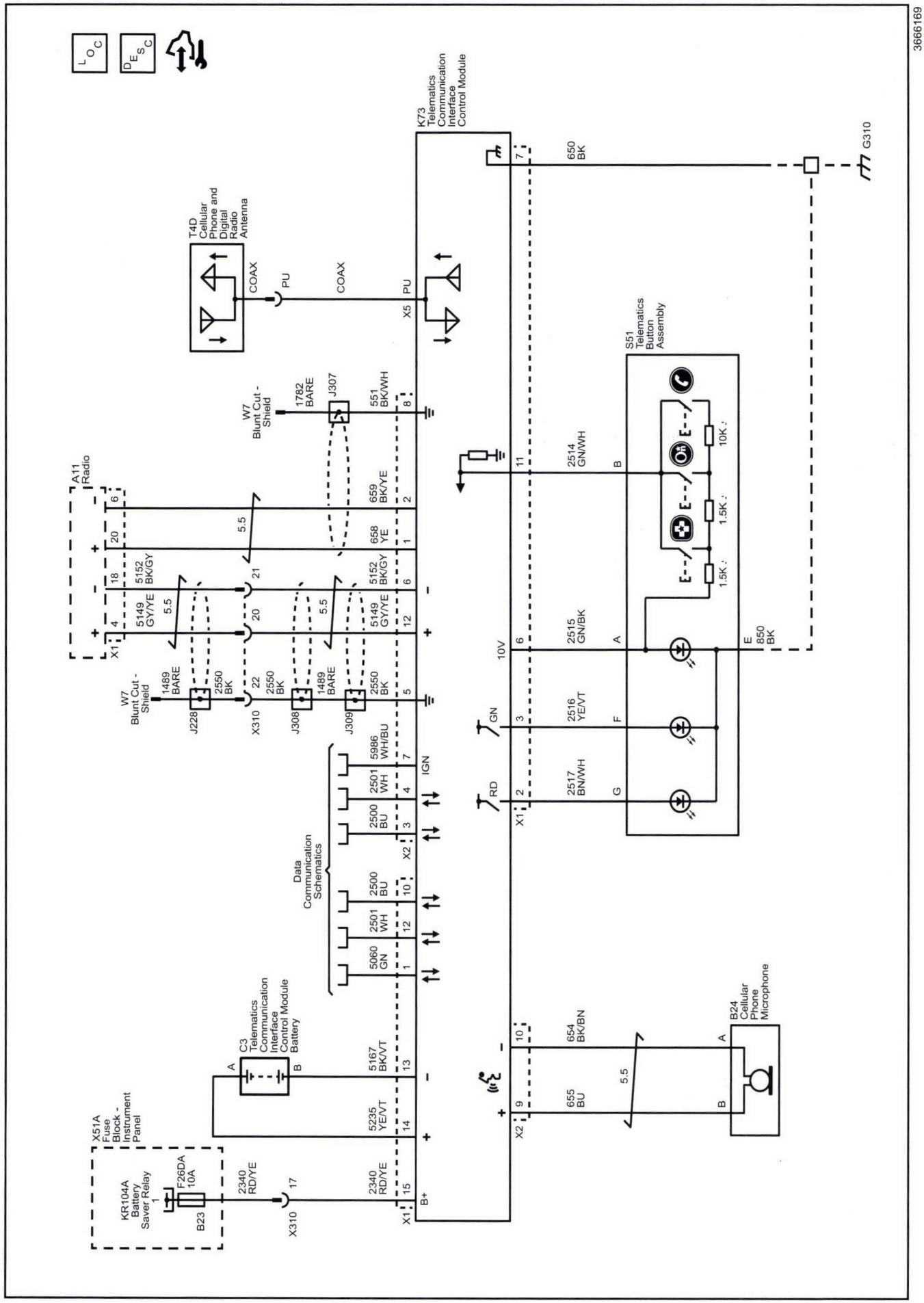
OnStar/Telematics Schematics (OnStar (UE1))
3666169
K73 Telematics Communication Interface Control Module
T4D Cellular Phone and Digital Radio Antenna
A11 Radio
W7 Blunt Cut - Shield
S51 Telematics Button Assembly
B24 Cellular Phone Microphone
C3 Telematics Communication Interface Control Module Battery
X51A Fuse Block - Instrument Panel
KR104A Battery Saver Relay 1
F26DA 10A
B23
G310
E 850 BK
Data Communication Schematics
COAX
PU
10V
IGN
B+

Cellular Telephone Schematics (Cellular Telephone Microphone)

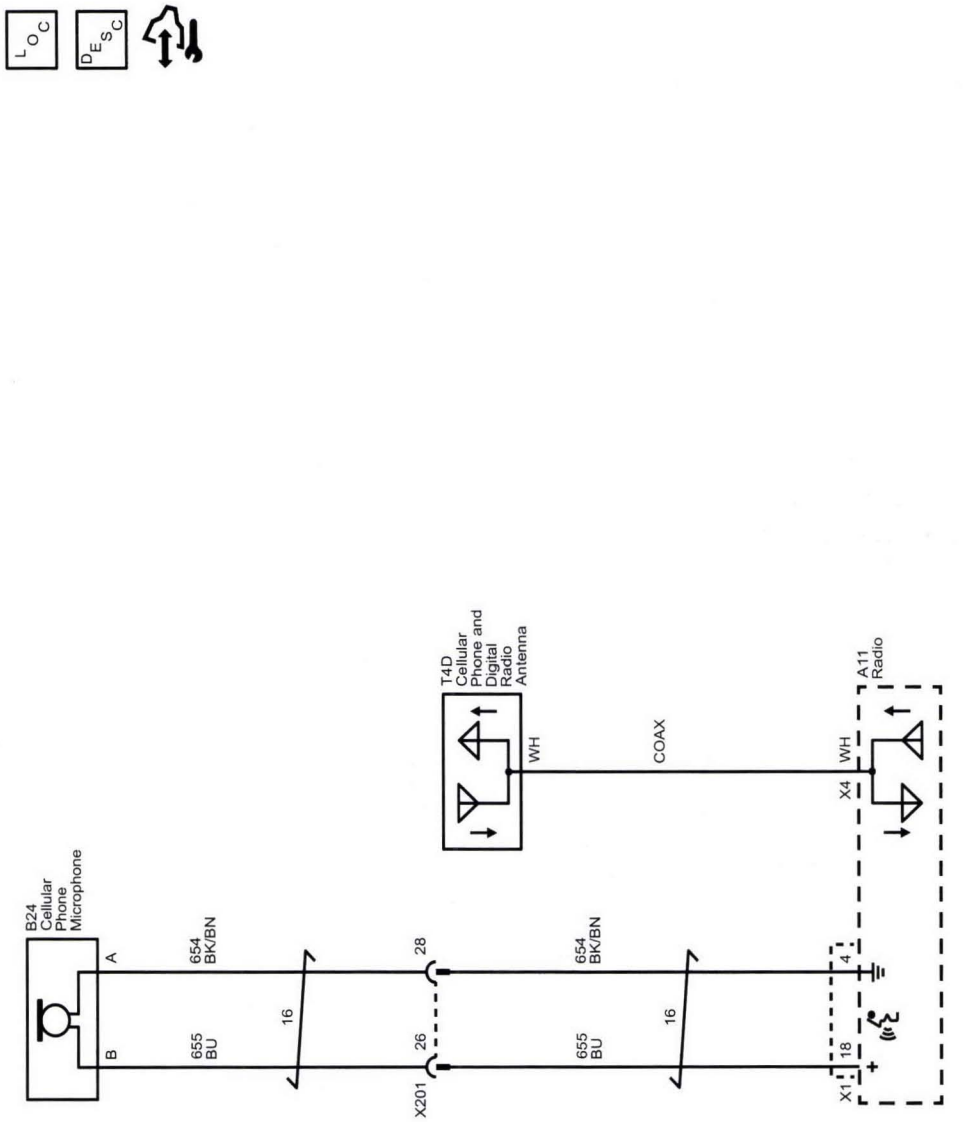

3666171

Diagnostic Information and Procedures

DTC B1025, B1035, B1045, or B1055

Diagnostic Instructions

- Perform the *Diagnostic System Check - Vehicle on page 6-91* prior to using this diagnostic procedure.
- Review *Strategy Based Diagnosis on page 6-83* for an overview of the diagnostic approach.
- *Diagnostic Procedure Instructions on page 6-84* provide an overview of each diagnostic category.

DTC Descriptors

DTC B1025 01: Left Front Audio Output Circuit
DTC B1035 01: Front Audio Output Circuit
DTC B1045 01: Left Rear Audio Output Circuit
DTC B1055 01: Right Rear Audio Output Circuit

For symptom byte information refer to *Symptom Byte List on page 6-117*.

Diagnostic Fault Information

Circuit	Short to Ground	Open/High Resistance	Short to Voltage	Signal Performance
Left Front Audio Signal Circuit	B1025 02*	B1025 04**	B1025 01*	—
Right Front Audio Signal Circuit	B1035 02*	B1035 04**	B1035 01*	—
Left Rear Audio Signal Circuit	B1045 02*	B1045 04**	B1045 01*	—
Right Rear Audio Signal Circuit	B1055 02*	B1055 04**	B1055 01*	—

* Noticeable audio distortion possible.
** No or reduced sound from speaker.

Circuit/System Description

Each of the audio output channel circuits (+) and (-), at the radio and audio amplifier have a DC bias voltage that is approximately one half of battery voltage. When using a DMM, each of the audio output channel circuits will measure approximately 6.5 V DC. The audio being played on the system is produced by a varying AC voltage that is centered around the DC bias voltage on the same circuit. The AC voltage is what causes the speaker cone to move and produce sound. The frequency (Hz) of the AC voltage signal is directly related to the frequency of the input (audio source playing) to the audio system. Both the DC bias voltage and the AC voltage signals are needed for the audio system to properly produce sound.

If equipped with the UW6 option (6 speaker system) the front speaker assemblies are a coaxial dual speaker design. Diagnostics are the same as a single speaker, as internal circuits connect two speakers into one assembly. Internal parts are not serviced separately, it is replaced as an assembly.

Diagnostic Aids

- Improper speaker mounting or loose trim may cause an audible buzz or distortion. Inspect the appropriate speaker and the surrounding interior trim for proper and secure mounting. If the speaker or surrounding interior trim is found to be loose or improperly secured, correctly secure the item.
- When equipped with an amplifier, the radio does not set DTCs for the audio outputs.

Conditions for Running the DTC

- Ignition is ON or in the ACC position
- The system voltage is 9-16 V
- The test is run once during radio wake up

Conditions for Setting the DTC

B1025 01, B1035 01, B1045 01, B1055 01

The radio detects a short to voltage on the specified audio (+) or (–) circuit.

B1025 02, B1035 02, B1045 02, B1055 02

The radio detects a short to ground on the specified audio (+) or (–) circuit.

B1025 04, B1035 04, B1045 04, B1055 04

The radio detects an open on the specified audio (+) or (–) circuit.

Action Taken When the DTC Sets

The radio continues to send the output signal to the speaker signal circuit with the current fault.

Conditions for Clearing the DTC

- A current DTC clears when the conditions for setting the DTC are no longer present and the ignition has been cycled from OFF to ON.
- A history DTC clears after 50 malfunction-free ignition cycles.

Reference Information

Schematic Reference

Radio/Navigation System Schematics on page 8-4

Connector End View Reference

Component Connector End Views on page 11-455

Description and Operation

Radio/Audio System Description and Operation on page 8-69

Electrical Information Reference

- *Circuit Testing on page 11-871*
- *Connector Repairs on page 11-895*
- *Testing for Intermittent Conditions and Poor Connections on page 11-877*
- *Wiring Repairs on page 11-883*

Scan Tool Reference

Control Module References on page 6-3 for scan tool information

Circuit/System Verification

1. Vehicle in Service Mode, A11 Radio ON, mute OFF.
2. Verify clear audio is heard from each speaker, adjusting fade and balance controls to test each speaker individually.

⇒ **If audio is inoperative from one or more speakers, or the audio emitted is not clear.**

Refer to Circuit/System Testing.

⇓ **If clear audio is heard from all speakers.**

3. All OK.

Circuit/System Testing

1. Vehicle OFF, disconnect the harness connector at the appropriate P19 Speaker. Vehicle in Service Mode, A11 Radio ON, mute OFF.
2. Test for 5–7 V between each audio signal circuit terminal 1 and terminal 2 and ground.

⇒ **If less than 5 V**

2.1. Vehicle OFF, disconnect the X1 harness connector at the A11 Radio.

2.2. Test for infinite resistance between the signal circuit and ground.

⇒ If less than infinite resistance, repair the short to ground on the circuit.

⇓ If infinite resistance

2.3. Test for less than 2 Ω in the signal circuit end to end.

⇒ If 2 Ω or greater, repair the open/high resistance in the circuit.

⇒ If less than 2 Ω, replace the A11 Radio.

⇒ **If greater than 7 V**

2.1. Vehicle OFF, disconnect the X1 harness connector at the A11 Radio. Vehicle in Service Mode.

2.2. Test for less than 1 V between the signal circuit and ground.

⇒ If 1 V or greater, repair the short to voltage on the circuit.

⇒ If less than 1 V, replace the A11 Radio.

⇓ **If between 5–7 V**

3. Test or replace the P19 Speaker.

Repair Instructions

Perform the *Diagnostic Repair Verification on page 6-123* after completing the repair.

- *Speaker Replacement Reference on page 8-49*
- *Control Module References on page 6-3* for radio replacement, programming, and setup.

DTC B125A

Diagnostic Instructions

- Perform the *Diagnostic System Check - Vehicle on page 6-91* prior to using this diagnostic procedure.
- Review *Strategy Based Diagnosis on page 6-83* for an overview of the diagnostic approach.
- *Diagnostic Procedure Instructions on page 6-84* provides an overview of each diagnostic category.

DTC Descriptors

DTC B125A 02: Antenna Signal Circuit Short to Ground
DTC B125A 04: Antenna Signal Circuit Open Circuit

Diagnostic Fault Information

Circuit	Short to Ground	Open/High Resistance	Short to Voltage	Signal Performance
Radio Antenna Coax	B125A 02	B125A 04	1	—
Antenna Ground	—	1	—	—
1. May exhibit possible AM/FM interference.				

Circuit/System Description

The AM/FM antenna is part of the multi-band antenna is located on the roof of the vehicle. The radio provides battery voltage to the AM/FM amplifier in the antenna base using the center conductor of the antenna coaxial cable. When a 12 V signal is seen by the amplifier, both AM and FM signals are amplified.

Conditions for Running the DTC

- Vehicle in Service Mode.
- Battery voltage must be between 9–16 V.

Conditions for Setting the DTC

B125A 02

The radio detects a short to ground in the antenna signal circuit center conductor.

B125A 04

The radio detects an open in the antenna signal circuit center conductor.

Action Taken When the DTC Sets

Radio reception may be poor or not available.

Conditions for Clearing the DTC

- The condition responsible for setting the DTC no longer exists.
- A history DTC will clears after 50 consecutive malfunction-free ignition cycles have occurred.

Diagnostic Aids

Poor AM and FM radio reception may be due to multiple influences, some of which may not be vehicle related. Areas which have high RF traffic or block the signal path may cause a degradation in radio reception. Radio reception may also be influenced by items within the vehicle, but not part of the radio system. Such examples are aftermarket electrical accessories or other items which may generate noise in the vehicle electrical system. Aftermarket window tinting, especially when there is a metallic in the film, may reduce radio reception.

AM reception is highly dependent on the antenna amplifier receiving battery voltage from the radio and being properly grounded. The antenna base has a built in antenna amplifier that boosts both AM and FM reception. When the antenna amplifier does not receive power, AM stations may not be received and FM reception will be limited. If the antenna base is not properly grounded, excessive interference in the signal may occur, or reception may be limited.

Reference Information

Schematic Reference

Radio/Navigation System Schematics on page 8-4

Connector End View Reference

Component Connector End Views on page 11-455

Description and Operation

Radio/Audio System Description and Operation on page 8-69

Electrical Information Reference

- *Circuit Testing on page 11-871*
- *Connector Repairs on page 11-895*
- *Testing for Intermittent Conditions and Poor Connections on page 11-877*
- *Wiring Repairs on page 11-883*

Scan Tool Reference

Control Module References on page 6-3 for scan tool information

Circuit/System Verification

1. Vehicle in Service Mode, A11 Radio ON.
2. Verify station reception is normal when tuned to several known good AM and FM stations.

⇒ **If AM or FM reception is poor.**

Refer to Circuit/System Testing

⇓ **If reception is normal**

3. All OK.

Circuit/System Testing

1. Vehicle OFF, disconnect the radio antenna coax cable from the A11 Radio and from the T4G Cellular Phone, Navigation, and Digital Radio Antenna.
2. Verify the antenna coax cable passes the coax cable component test. Refer to Component Testing.

⇒ **If the coax cable does not pass the test**

Replace the antenna coax cable

⇓ **If the coax cable passes the test**

3. Connect the antenna coax cable to the A11 Radio. Vehicle in Service Mode, A11 Radio ON.
4. Verify a test lamp illuminates between the antenna coax cable center terminal and ground at the T4G Cellular Phone, Navigation, and Digital Radio Antenna.

⇒ **If the test lamp does not illuminate**

Replace the A11 Radio.

⇓ **If the test lamp illuminates**

5. Test or replace the T4G Cellular Phone, Navigation, and Digital Radio Antenna.

Component Testing

Caution: Refer to *Test Probe Caution on page 0-9*.

Note: Before testing the coax cable, check the cable exterior for being pinched, cut, damaged, or having loose connections at the components, which can cause reception issues.

To prevent false reading when testing the center coax terminals, use care not to ground the test probe on the outer housing/shield.

Coax Cable Test

1. Vehicle OFF, disconnect the coax cable at both components.
2. Test for less than 5 Ω between coax cable center terminal end to end.

⇒ **If 5 Ω or greater**

Replace the coax cable

⇓ **If less than 5 Ω**

3. Test for less than 5 Ω between the coax cable outer shield end to end.

⇒ **If 5 Ω or greater**

Replace the coax cable

⇓ **If less than 5 Ω**

4. Test for infinite resistance between the coax cable center terminal and the coax cable outer shield.

⇒ **If less than infinite resistance**

Replace the coax cable

⇓ **If infinite resistance**

5. All OK

Repair Instructions

Perform the *Diagnostic Repair Verification on page 6-123* after completing the repair.

- *Radio Antenna Base Replacement on page 8-59*
- *Control Module References on page 6-3* for radio replacement, programming, and setup.

DTC B125B

Diagnostic Instructions

- Perform the *Diagnostic System Check - Vehicle on page 6-91* prior to using this diagnostic procedure.
- Review *Strategy Based Diagnosis on page 6-83* for an overview of the diagnostic approach.
- *Diagnostic Procedure Instructions on page 6-84* provides an overview of each diagnostic category.

DTC Descriptors

DTC B125B 02: Antenna 2 Signal Circuit Short to Ground
DTC B125B 04: Antenna 2 Signal Circuit Open Circuit

Diagnostic Fault Information

Circuit	Short to Ground	Open/High Resistance	Short to Voltage	Signal Performance
Radio Antenna Coax	B125A 02	B125A 04	1	—
Ground	—	1	—	—
1. May exhibit possible AM/FM interference.				

Circuit/System Description

The multi-band antenna is located on the roof of the vehicle. The radio antenna is enabled when the radio is turned on. The radio provides battery voltage to the antenna using the center conductor of the antenna coaxial cable. When a 12 V signal is seen on the center conductor of the antenna coax, the digital signal is amplified.

Conditions for Running the DTC

- Ignition ON.
- Battery voltage must be between 9–16 V.

Conditions for Setting the DTC

B125B 02

The radio detects a short to ground in the antenna signal circuit center conductor.

B125B 04

The radio detects an open in the antenna signal circuit center conductor.

Action Taken When the DTC Sets

Radio reception may be poor or not available.

Conditions for Clearing the DTC

- The condition responsible for setting the DTC no longer exists.
- A history DTC will clears after 50 consecutive malfunction-free ignition cycles have occurred.

Reference Information

Schematic Reference

Radio/Navigation System Schematics on page 8-4

Connector End View Reference

Component Connector End Views on page 11-455

Description and Operation

Radio/Audio System Description and Operation on page 8-69

Electrical Information Reference

- *Circuit Testing on page 11-871*
- *Connector Repairs on page 11-895*
- *Testing for Intermittent Conditions and Poor Connections on page 11-877*
- *Wiring Repairs on page 11-883*

Scan Tool Reference

Control Module References on page 6-3 for scan tool information

Circuit/System Verification

1. Ignition ON, A11 Radio ON. Verify station reception is normal when tuned to several known good digital stations.

⇒ **If digital reception is poor.**

Refer to Circuit/System Testing

⇓ **If reception is normal**

2. All OK.

Circuit/System Testing

1. Ignition OFF, disconnect the radio antenna coax cable from the A11 Radio and from the T4M Radio Antenna.
2. Verify the antenna coax cable passes the coax cable component test. Refer to Component Testing.

⇒ **If the coax cable does not pass the test**

Replace the antenna coax cable

⇓ **If the coax cable passes the test**

3. Connect the radio antenna coax cable to the A11 Radio.
4. Ignition ON, A11 Radio ON.
5. Verify a test lamp illuminates between the antenna coax cable center terminal at the T4M Radio Antenna and chassis ground.

⇒ **If the test lamp does not illuminate**

Replace the A11 Radio.

⇓ **If the test lamp illuminates**

6. Test or replace the T4M Radio Antenna.

Component Testing

Caution: Refer to *Test Probe Caution on page 0-9*.

Note: Before testing the coax cable, check the cable exterior for being pinched, cut, damaged, or having loose connections at the components, which can cause reception issues.

To prevent false reading when testing the center coax terminals, use care not to ground the test probe on the outer housing/shield.

Coax Cable Test

1. Ignition OFF, disconnect the coax cable at both components.
2. Test for less than 5 Ω between coax cable center terminal end to end.

⇒ **If 5 Ω or greater**

Replace the coax cable

⇓ **If less than 5 Ω**

3. Test for less than 5 Ω between the coax cable outer shield end to end.

⇒ **If 5 Ω or greater**

Replace the coax cable

⇓ **If less than 5 Ω**

4. Test for infinite resistance between the coax cable center terminal and the coax cable outer shield.

⇒ **If less than infinite resistance**

Replace the coax cable

⇓ **If infinite resistance**

5. All OK.

Repair Instructions

Perform the *Diagnostic Repair Verification on page 6-123* after completing the repair.

- *Radio Antenna Base Replacement on page 8-59*
- *Control Module References on page 6-3* for radio replacement, programming, and setup.

DTC B125C

Diagnostic Instructions

- Perform the *Diagnostic System Check - Vehicle on page 6-91* prior to using this diagnostic procedure.
- Review *Strategy Based Diagnosis on page 6-83* for an overview of the diagnostic approach.
- *Diagnostic Procedure Instructions on page 6-84* provides an overview of each diagnostic category.

DTC Descriptors

DTC B125C 01: Satellite Antenna Circuit Short to Battery
DTC B125C 02: Satellite Antenna Circuit Short to Ground
DTC B125C 04: Satellite Antenna Circuit Open

Circuit/System Description

The digital radio receiver, located inside the radio, receives digital radio information from the digital radio antenna located on the outside of the vehicle. The digital radio receiver is connected to the digital radio antenna via a shielded coax cable. The digital radio antenna contains an amplifier which is powered by the radio through the coax cable.

Conditions for Running the DTC

This DTC is run every 300 milliseconds.

Conditions for Setting the DTC

The radio detects a circuit fault in the digital radio antenna.

Action Taken When the DTC Sets

The radio displays No XM Signal or Check Antenna.

Conditions for Clearing the DTC

- A current DTC clears when the condition for setting the DTC is no longer present.
- A history DTC clears after 100 malfunction-free ignition cycles.

Diagnostic Aids

The digital radio antenna requires a clear line of sight to the sky to operate properly. Reception may be limited, intermittent, or unavailable inside structures.

Reference Information

Schematic Reference

Radio/Navigation System Schematics on page 8-4

Connector End View Reference

Component Connector End Views on page 11-455

Description and Operation

Radio/Audio System Description and Operation on page 8-69

Electrical Information Reference

- *Circuit Testing on page 11-871*
- *Connector Repairs on page 11-895*
- *Testing for Intermittent Conditions and Poor Connections on page 11-877*
- *Wiring Repairs on page 11-883*

Special Tools

EL-48028 Digital Radio Test Antenna

Circuit/System Verification

1. With the vehicle outside in an area with an unobstructed view of the southern sky, tune to XM.
2. Verify DTC B125C is not set as current and the No XM Signal message is not displayed on the radio.

⇒ **If DTC B125C is set as current or the No XM Signal message is displayed.**

Refer to Circuit/System Testing.

⇓ **If DTC B125C is not set as current and the No XM Signal message is not displayed.**

3. All OK.

Circuit/System Testing

1. Vehicle OFF, disconnect the digital radio antenna coax cable from the A11 Radio. Connect the *EL-48028* Digital Radio Test Antenna to the radio and place on the roof of the vehicle.
2. Vehicle in Service Mode, radio tuned to XM channel 1.
3. Verify DTC B125C is not set as current and XM reception is improved.

⇒ **If DTC B125C is set as current or XM reception is not improved**

Replace the A11 Radio.

⇓ **If DTC B125C is not set as current and XM reception is improved**

4. Vehicle OFF, disconnect the digital radio antenna coax cable from the T4G Cellular Phone, Navigation, and Digital Radio Antenna.

5. Verify the digital radio antenna coax cable passes the coax cable component test. Refer to Component Testing.

⇒ **If the coax cable does not pass the test**

Replace the antenna coax cable

⇓ **If the coax cable passes the test**

6. Test or replace the T4G Cellular Phone, Navigation, and Digital Radio Antenna.

Component Testing

Caution: Refer to *Test Probe Caution on page 0-9*.

Note: Before testing the coax cable, check the cable exterior for being pinched, cut, damaged, or having loose connections at the components, which can cause reception issues.

To prevent false reading when testing the center coax terminals, use care not to ground the test probe on the outer housing/shield.

Coax Cable Test

1. Vehicle OFF, disconnect the coax cable at both components.
2. Test for less than 5 Ω between coax cable center terminal end to end.

⇒ **If 5 Ω or greater**

Replace the coax cable

⇓ **If less than 5 Ω**

3. Test for less than 5 Ω between the coax cable outer shield end to end.

⇒ **If 5 Ω or greater**

Replace the coax cable

⇓ **If less than 5 Ω**

4. Test for infinite resistance between the coax cable center terminal and the coax cable outer shield.

⇒ **If less than infinite resistance**

Replace the coax cable

⇓ **If infinite resistance**

5. All OK

Repair Instructions

Perform the *Diagnostic Repair Verification on page 6-123* after completing the repair.

- *Radio Antenna Base Replacement on page 8-59*
- *Control Module References on page 6-3* for radio replacement, programming, and setup.

DTC B1271

Diagnostic Instructions

- Perform the *Diagnostic System Check - Vehicle on page 6-91* prior to using this diagnostic procedure.
- Review *Strategy Based Diagnosis on page 6-83* for an overview of the diagnostic approach.
- *Diagnostic Procedure Instructions on page 6-84* provides an overview of each diagnostic category.

DTC Descriptor

DTC B1271 00: Theft Protection Active

Circuit/System Description

When the radio is initially installed in the vehicle, the radio receives VIN information via serial data. The radio stores a portion of the VIN and compares this sequence to the VIN information received each time the radio powers on. The VIN in the radio is a single one-time learn.

The radio theft deterrent system is intended to disable or limit radio functionality if incorrect vehicle information is received by the radio. The radio disables functionality if the VIN information received by the radio does not match the VIN information that has been learned by the radio. This DTC is generated by the module when the Theft Protection is activated.

Conditions for Running the DTC

This DTC test runs when the radio changes from OFF to ON.

Conditions for Setting the DTC

The radio has learned a correct VIN sequence and the VIN information received via serial data does NOT match the learned VIN sequence.

Action Taken When the DTC Sets

The radio may be disabled or have limited functionality. The radio display will indicate that theft protection is active.

Conditions for Clearing the DTC

The radio receives the correct VIN information via serial data.

Diagnostic Aids

A possible cause of incorrect VIN info could be the radio was originally installed in another vehicle.

Reference Information

Schematic Reference

Radio/Navigation System Schematics on page 8-4

Connector End View Reference

Component Connector End Views on page 11-455

Description and Operation

Radio/Audio System Description and Operation on page 8-69

Electrical Information Reference

- *Circuit Testing on page 11-871*
- *Connector Repairs on page 11-895*
- *Testing for Intermittent Conditions and Poor Connections on page 11-877*
- *Wiring Repairs on page 11-883*

Scan Tool Reference

Control Module References on page 6-3 for scan tool information

Circuit/System Verification

1. Vehicle in Service Mode, radio ON.
2. Verify DTC B1271 is not set.

⇒ **If DTC B1271 is set**

Replace the A11 Radio.

⇓ **If DTC B1271 is not set**

3. All OK.

Repair Instructions

Perform the *Diagnostic Repair Verification on page 6-123* after completing the repair.

Control Module References on page 6-3 for radio replacement, programming, and setup.

DTC B1446 or B1447

Diagnostic Instructions

- Perform the *Diagnostic System Check - Vehicle on page 6-91* prior to using this diagnostic procedure.
- Review *Strategy Based Diagnosis on page 6-83* for an overview of the diagnostic approach.
- *Diagnostic Procedure Instructions on page 6-84* provides an overview of each diagnostic category.

DTC Descriptors

DTC B1446: Replace Backup Power Source Below Minimum Threshold

DTC B1447: Backup Power Source Open Circuit

For symptom byte information refer to *Symptom Byte List on page 6-117*

Diagnostic Fault Information

Circuit	Short to Ground	Open/High Resistance	Short to Voltage	Signal Performance
Backup Battery B+	B1447 03	B1447 04	—	—
Backup Battery Low Reference	B1447 03	B1447 04	—	—

Circuit/System Description

The backup power source provides voltage to the telematics communication interface control module , to be able to successfully place a call in the event of a main battery disconnect during a collision event.

Conditions for Running the DTC

B1446 03

- Ignition is ON.
- System voltage is between 9.5 and 15.5 V.
- DTC B1447 is not set.

B1447 04

- Ignition is ON.
- System voltage is between 9.5 and 15.5 V.
- The above conditions are present for greater than 10 s.

Conditions for Setting the DTC

B1446 03

The telematics communication interface control module detects that the backup power source voltage has dropped below the minimum threshold value.

B1447 04

The telematics communication interface control module detects no voltage from the backup power source.

Action Taken When the DTC Sets

B1446 03

The OnStar® status LED turns red.

B1447 04

- The OnStar® status LED turns red.
- The telematics communication interface control module will be unable to place a call in the event of a main battery disconnect during a collision event.

Conditions for Clearing the DTC

- A current DTC B1446 will clear when the telematics communication interface control module detects the voltage of the backup power source is above the minimum threshold value.
- A current DTC B1447 will clear when the telematics communication interface control module detects voltage from the backup power source.
- A history DTC clears after 50 malfunction-free ignition cycles.

Diagnostic Aids

- Shorting the backup power source positive voltage circuit to the backup power source ground circuit or chassis ground will activate the internal circuit protection of the backup power source, rendering the backup power source inoperative.
- DTC B1447 may set if the K73 Telematics Communication Interface Control Module has been incorrectly disconnected or serviced. When disconnecting the K73 Telematics Communication Interface Control Module , disconnect the harness connector X1 at the K73 Telematics Communication Interface Control Module prior to disconnecting any other harness connectors. This will ensure the backup power source is preserved when voltage is removed from the K73 Telematics Communication Interface Control Module .

Reference Information

Schematic Reference

OnStar/Telematics Schematics on page 8-6

Connector End View Reference

Component Connector End Views on page 11-455

Description and Operation

OnStar Description and Operation on page 8-63

Electrical Information Reference

- *Testing for Intermittent Conditions and Poor Connections on page 11-877*
- *Circuit Testing on page 11-871*
- *Wiring Repairs on page 11-883*
- *Connector Repairs on page 11-895*

Circuit/System Testing

1. Ignition OFF and all vehicle systems OFF, disconnect the X1 harness connector at the K73 Telematics Communication Interface Control Module. It may take up to 2 minutes for all vehicle systems to power down.
2. Test for greater than 9.5 V between the B+ circuit terminal 14 and the low reference circuit terminal 13.

⇒ **If 9.5 V or less**

Test or replace the C3 Telematics Communication Interface Control Module Battery.

⇓ **If greater than 9.5 V**

3. Replace the K73 Telematics Communication Interface Control Module .

Repair Instructions

Perform the *Diagnostic Repair Verification on page 6-123* after completing the repair.

- *Communication Interface Module Battery Replacement on page 8-56*
- *Control Module References on page 6-3* for telematics communication interface control module replacement, programming and setup.

DTC B2455

Diagnostic Instructions

- Perform the *Diagnostic System Check - Vehicle on page 6-91* prior to using this diagnostic procedure.
- Review *Strategy Based Diagnosis on page 6-83* for an overview of the diagnostic approach.
- *Diagnostic Procedure Instructions on page 6-84* provide an overview of each diagnostic category.

DTC Descriptors

DTC B2455 02: Cellular Phone Microphone Circuit Short to Ground
DTC B2455 04: Cellular Phone Microphone Circuit Open/High Resistance

Diagnostic Fault Information

Circuit	Short to Ground	Open/High Resistance	Short to Voltage	Signal Performance
Signal Terminal B	B2455 02	B2455 04	—	—
Low Reference Terminal A	—	B2455 04	B2455 04	—

Circuit/System Description

The telematics communication interface control module provides the cellular phone microphone with a supplied voltage on the cellular phone microphone signal circuit. When the microphone is in use, voice data from the user is sent back to the telematics communication interface control module on the cellular microphone low reference circuit.

Conditions for Running the DTC

- The ignition must be in the RUN or ACC position.
- The system voltage is at least 9.5 V and no more than 15.5 V.
- All the above conditions are present for greater than 10 s.

Conditions for Setting the DTC

B2455 02

The telematics communication interface control module detects a short to ground in the cellular phone microphone signal circuit for 10 s or greater.

B2455 04

The following conditions will set this DTC:

- The telematics communication interface control module detects an open/high resistance in the cellular phone microphone signal circuit for 10 s or greater.
- The telematics communication interface control module detects an open/high resistance in the microphone low reference circuit for 10 s or greater.

Action Taken When the DTC Sets

- The OnStar® status LED turns red.
- The telematics communication interface control module will not receive a signal from the cellular phone microphone.
- Calls can be placed but the caller cannot be heard.

Conditions for Clearing the DTC

- The condition responsible for setting the DTC no longer exists.
- A history DTC will clear once 50 consecutive malfunction-free ignition cycles have occurred.

Reference Information

Schematic Reference

OnStar/Telematics Schematics on page 8-6

Connector End View Reference

Component Connector End Views on page 11-455

Description and Operation

OnStar Description and Operation on page 8-63

Electrical Information Reference

- *Circuit Testing on page 11-871*
- *Connector Repairs on page 11-895*
- *Testing for Intermittent Conditions and Poor Connections on page 11-877*
- *Wiring Repairs on page 11-883*

Scan Tool Reference

Control Module References on page 6-3 for scan tool information

Circuit/System Testing

1. Ignition OFF, disconnect the harness connector at the B24 Cellular Phone Microphone, ignition ON.
2. Test for 8.0-10.5 V between the signal circuit terminal B and ground.

⇒ **If less than 8.0 V**

2.1. Ignition OFF, disconnect the X2 harness connector at the K73 Telematics Communication Interface Control Module.

2.2. Test for infinite resistance between the signal circuit and ground.

⇒ If less than infinite resistance, repair the short to ground in the circuit.

⇓ If infinite resistance

2.3. Test for less than 2 Ω in the signal circuit end to end.

⇒ If 2 Ω or greater, repair the open/high resistance in the circuit.

⇒ If less than 2 Ω, replace the K73 Telematics Communication Interface Control Module.

⇒ **If greater than 10.5 V**

2.1. Ignition OFF, disconnect the X2 harness connector at the K73 Telematics Communication Interface Control Module, ignition ON.

2.2. Test for less than 1 V between the signal circuit and ground.

⇒ If 1 V or greater, repair the short to voltage on the circuit.

⇓ If less than 1 V, replace the K73 Telematics Communication Interface Control Module.

⇓ **If between 8.0-10.5 V**

3. Test for less than 1 V between the low reference circuit terminal A and ground.

⇒ **If greater than 1 V**

3.1. Ignition OFF, disconnect the X2 harness connector at the K73 Telematics Communication Interface Control Module, ignition ON.

3.2. Test for less than 1 V between the low reference circuit and ground.

⇒ If 1 V or greater, repair the short to voltage in the circuit.

⇒ If less than 1 V, replace the K73 Telematics Communication Interface Control Module.

⇓ **If less than 1 V**

4. Test for greater than 8 V between the signal circuit terminal B and the low reference circuit terminal A.

⇒ **If less than 8 V**

4.1. Ignition OFF, disconnect the X2 harness connector at the K73 Telematics Communication Interface Control Module.

4.2. Test for infinite resistance between the low reference circuit and ground.

⇒ If less than infinite resistance, repair the short to ground in the circuit.

⇓ If infinite resistance

4.3. Test for less than 2 Ω in the signal circuit end to end.

⇒ If 2 Ω or greater, repair the open/high resistance in the circuit.

⇒ If less than 2 Ω, replace the vehicle K73 Telematics Communication Interface Control Module.

⇒ **If greater than 8 V**

5. Test or replace the B24 Cellular Phone Microphone.

Repair Instructions

Perform the *Diagnostic Repair Verification on page 6-123* after completing the repair.

- *Mobile Telephone Microphone Replacement on page 8-53*
- *Control Module References on page 6-3* for control module replacement, programming and setup.

DTC B2462

Diagnostic Instructions

- Perform the *Diagnostic System Check - Vehicle on page 6-91* prior to using this diagnostic procedure.
- Review *Strategy Based Diagnosis on page 6-83* for an overview of the diagnostic approach.
- *Diagnostic Procedure Instructions on page 6-84* provides an overview of each diagnostic category.

DTC Descriptors

DTC B2462 02: Global Positioning System Short to Ground

DTC B2462 04: Global Positioning System Open

Circuit/System Description

The navigation antenna is connected to the Telematics Communication Interface Control Module. The module supplies 5 V to the antenna to power the internal amplifier through the center conductor of the antenna coax cable.

When the vehicle is equipped with the optional navigation system, a Navigation Antenna Signal Splitter is installed to distribute the navigation signal to both the Telematics Communication Interface Control Module and the navigation radio. The radio supplies 5 V through the coax cable to power the Navigation Antenna Signal Splitter.

Conditions for Running the DTC

- Radio On.
- System voltage is greater than 9 V and less than 16 V.
- The navigation system/telematics communication interface control module tests the GPS antenna every 10 s.

Conditions for Setting the DTC

B2462 02

The telematics communication interface control module detects a short to ground on the GPS antenna signal circuit.

B2462 04

The telematics communication interface control module detects a open/high resistance on the GPS antenna signal circuit.

Action Taken When the DTC Sets

- The telematics communication interface control module uses the last reported position and the vehicle speed signal to calculate the vehicle position.
- Route guidance may be inaccurate.
- Turn by turn navigation may be inaccurate or inoperative.

Conditions for Clearing the DTC

- The condition responsible for setting the DTC no longer exists.
- A history DTC will clear once 50 consecutive malifunction–free ignition cycles have occurred.

Diagnostic Aids

- The scan tool Telematics Communication Interface Control Module GPS signal parameter will display a Yes or No dependent upon whether or not the module sees an increment of the seconds transmitted by GPS signals to the Telematics Communication Interface Control Module. Upon entering this screen, the GPS signal title will initially display Yes, regardless of the presence of time increment, for at least 2 seconds, while the algorithm in the scan tool determines the status of the clock. If increment is found, Yes is continually displayed. If the clock remains static, No is displayed. The scan tool looks for increment every second, regardless of current display.
- Inaccurate or aged GPS position concerns which are no longer present may have been due to the temporary loss of GPS signal reception by the vehicle. Conditions such as tunnels or parking structures will restrict the cellular phone and navigation antenna from a clear view of the satellites in the sky and may have caused this temporary data loss.
- The GPS requires a clear line of sight to the sky to operate properly. In most cases the GPS will not have reception near tall buildings or inside structures.

Reference Information

Schematic Reference

- *OnStar/Telematics Schematics on page 8-6*
- *Radio/Navigation System Schematics on page 8-4*

Connector End View Reference

Component Connector End Views on page 11-455

Description and Operation

- *OnStar Description and Operation on page 8-63*
- *Radio/Audio System Description and Operation on page 8-69*

Electrical Information Reference

- *Circuit Testing on page 11-871*
- *Connector Repairs on page 11-895*

- *Testing for Intermittent Conditions and Poor Connections on page 11-877*
- *Wiring Repairs on page 11-883*

Scan Tool Reference

Control Module References on page 6-3 for scan tool information

Special Tools

EL-49903 OnStar Antenna Diagnostic Tool Kit

Circuit/System Verification

Note: The following verification requires the vehicle to be outside with an unobstructed view of the southern sky. Allow 5 minutes after turning the ignition ON for the vehicle to acquire the GPS satellites signal.

1. Ignition ON.
2. Verify that DTC B2462 is not set in the Telematics Communication Interface Control Module.

⇒ **If DTC B2462 is set in the Telematics Communication Interface Control Module and the vehicle is not equipped with a navigation system**

Refer to Circuit/System Testing Without Navigation System.

⇒ **If DTC B2462 is set in the Telematics Communication Interface Control Module and the vehicle is equipped with a navigation system**

Refer to Circuit/System Testing With Navigation System.

⇓ **If DTC B2462 is not set in the Telematics Communication Interface Control Module**

3. Verify an OnStar advisor can locate the vehicle after performing a blue button press.

⇒ **If the advisor can not locate the vehicle and the vehicle is not equipped with a navigation system**

Refer to Circuit/System Testing Without Navigation System

⇒ **If the advisor can not locate the vehicle and the vehicle is equipped with a navigation system**

Refer to Circuit/System Testing With Navigation System.

⇓ **If the advisor can locate the vehicle**

4. Verify DTC B2462 is not set in the radio.

⇒ **If DTC B2462 is set in the radio**

Refer to Circuit/System Testing With Navigation System – Step 9.

⇓ **If DTC B2462 is not set in the radio**

5. Verify that the NO GPS symbol/message is not displayed on the radio.

⇒ **If the NO GPS symbol/message is displayed**

Refer to Circuit/System Testing With Navigation System – Step 9.

⇓ **If the NO GPS symbol/message is not displayed**

6. All OK.

Circuit/System Testing

without Navigation System

Note: You must perform the Circuit/System Verification before proceeding with Circuit/System Testing.

1. Ignition OFF, disconnect the GPS and cellular coax cable connector at the K73 Telematics Communication Interface Control Module.
2. Attach the EL-49903–1 OnStar test antenna to the EL-49903–5 combiner. Using the EL-49903–6 brown –F coax cable attach the combiner to the K73 Telematics Communication Interface Control Module. Place the test antenna on the roof of the vehicle, ignition ON.
3. Verify DTC B2462 is not set or that the OnStar advisor can locate the vehicle.

⇒ **If DTC B2462 is set or the advisor can not locate the vehicle**

Replace the K73 Telematics Communication Interface Control Module.

⇓ **If DTC B2462 is not set or the advisor can locate the vehicle**

4. Test the coax cable between the K73 Telematics Communication Interface Control Module and the T4G Cellular Phone, Navigation, and Digital Radio Antenna. Refer to component testing.

⇒ **If the coax cable does not pass the test**

Replace the coax cable.

⇓ **If the coax cable passes the test**

5. Test or replace the T4G Cellular Phone, Navigation, and Digital Radio Antenna.

with Navigation System

Note: You must perform the Circuit/System Verification before proceeding with Circuit/System Testing.

1. Ignition OFF, disconnect the T4G Cellular Phone, Navigation, and Digital Radio Antenna coax cable at the T15 Navigation Antenna Signal Splitter.
2. Attach the EL-49903–1 OnStar test antenna to the EL-49903–5 combiner. Using the EL-49903–7 grey – G coax cable attach the combiner to the T15 Navigation Antenna Signal Splitter. Place the test antenna on the roof of the vehicle, ignition ON.

3. Verify DTC B2462 is not set or that the OnStar advisor can locate the vehicle.

⇒ **If DTC B2462 is not set or the advisor can locate the vehicle**

3.1. Test the coax cable between the T15 Navigation Antenna Signal Splitter and the T4G Cellular Phone, Navigation, and Digital Radio Antenna. Refer to Component Testing.

⇒ If the coax cable does not pass the test

Replace the coax cable.

⇓ If the coax cable passes the test

3.2. Replace the T4G cellular phone, navigation and digital radio antenna.

⇓ **If DTC B2462 is set or if the advisor can not locate the vehicle**

4. Ignition OFF, disconnect the GPS and cellular coax cable connector at the K73 Telematics Communication Interface Control Module.
5. Attach the EL-49903–1 OnStar test antenna to the EL-49903–5 combiner. Using the EL-49903–6 brown –F coax cable attach the combiner to the K73 Telematics Communication Interface Control Module. Place the test antenna on the roof of the vehicle, ignition ON.
6. Verify DTC B2462 is not set or that the OnStar advisor can locate the vehicle.

⇒ **If DTC B2462 is set or the advisor can not locate the vehicle.**

Replace the K73 Telematics Communication Interface Control Module.

⇓ **If DTC B2462 is not set or the advisor can locate the vehicle.**

7. Ignition OFF.
8. Test the coax cable between the T15 Navigation Antenna Signal Splitter and the K73 Telematics Communication Interface Control Module. Refer to Component Testing.

⇒ **If the coax cable does not pass the test.**

Replace the coax cable.

⇓ **If the coax cable passes the test.**

9. Ignition OFF, disconnect the GPS coax cable at the A11 Radio.
10. Attach the EL-49903–1 OnStar test antenna to the A11 Radio and place the test antenna on the roof of the vehicle.
11. Ignition ON.
12. Verify DTC B2462 is not set or that the NO GPS symbol/message is not displayed on the radio.

⇒ **If DTC B2462 is set or the NO GPS symbol/ message is displayed**

Replace the A11 Radio

⇓ **If DTC B2462 is not set or if the NO GPS symbol/message is not displayed.**

13. Ignition OFF.
14. Test the coax cable between the T15 Navigation Antenna Signal Splitter and the A11 Radio. Refer to Component Testing.

⇒ **If the coax cable does not pass the test.**

Replace the coax cable.

⇓ **If the coax cable passes the test.**

15. Test or replace the T15 Navigation Antenna Signal Splitter.

Component Testing

Caution: Refer to *Test Probe Caution on page 0-9*.

Note:

- Before testing the coax cable, check the cable exterior for being pinched, cut, damaged, or having loose connections at the components, which can cause reception issues.
- To prevent false reading when testing the center coax terminals, use care not to ground the test probe on the outer housing/shield.
- The vehicle may be equipped with sectioned coax. Test each section and replace only the faulty section, not the entire length of coax.

Coax Cable Test

1. Ignition OFF, disconnect the coax cable at both components.
2. Test for less than 5 Ω between the coax cable center terminal end to end.

⇒ **If 5 Ω or greater**

Replace the coax cable.

⇓ **If less than 5 Ω**

3. Test for greater than 5 Ω between the coax cable outer shield end to end.

⇒ **If 5 Ω or greater**

Replace the coax cable.

⇓ **If less than 5 Ω**

4. Test for infinite resistance between the coax cable center terminal and the coax cable outer shield.

⇒ **If less than infinite resistance**

Replace the coax cable.

⇓ **If infinite resistance**

5. All OK.

Repair Instructions

Perform the *Diagnostic Repair Verification on page 6-123* after completing the repair.

- *Radio Antenna Base Replacement on page 8-59*
- *Control Module References on page 6-3* for radio or telematics communication interface control module replacement, programming, and setup

DTC B2470

Diagnostic Instructions

- Perform the *Diagnostic System Check - Vehicle on page 6-91* prior to using this diagnostic procedure.
- Review *Strategy Based Diagnosis on page 6-83* for an overview of the diagnostic approach.
- *Diagnostic Procedure Instructions on page 6-84* provides an overview of each diagnostic category.

DTC Descriptors

DTC B2470 02: Cellular Phone Antenna Circuit Malfunction Short to Ground

DTC B2470 04: Cellular Phone Antenna Circuit Malfunction Open Circuit

Circuit/System Description

The primary cellular phone antenna element is connected to the telematics communication interface control module (violet connector) via a shielded coaxial cable. Cellular communication takes place on both the primary cellular antenna signal circuit and the GPS/ secondary cellular antenna signal circuit. This diagnostic only applies to the primary cellular antenna signal circuit. Internal to the antenna on the cellular antenna signal circuit resistance is used to apply a load, which the telematics communication interface control module uses to detect the presence of the antenna.

Conditions for Running the DTC

- Ignition in the RUN or ACC position.
- System voltage is between 9.5 V and 15.5 V.
- The above conditions are present for greater than 1 s.

Conditions for Setting the DTC

B2470 02

The telematics communication interface control module detects a short to ground on the primary cellular antenna signal circuit.

B2470 04

- The telematics communication interface control module detects an open or high resistance on the primary cellular antenna signal circuit.
- The above conditions are present for greater than 1 s.

Action Taken When the DTC Sets

The OnStar® status LED turns red.

Conditions for Clearing the DTC

- The telematics communication interface control module detects the presence of a cellular antenna.
- A history DTC clears after 50 malfunction-free ignition cycles.

Reference Information

Schematic Reference

OnStar/Telematics Schematics on page 8-6

Connector End View Reference

Component Connector End Views on page 11-455

Description and Operation

OnStar Description and Operation on page 8-63

Electrical Information Reference

- *Circuit Testing on page 11-871*
- *Connector Repairs on page 11-895*
- *Testing for Intermittent Conditions and Poor Connections on page 11-877*
- *Wiring Repairs on page 11-883*

Scan Tool Reference

Control Module References on page 6-3 for scan tool information

Special Tools

EL-49903-1 Test Antenna Navn-Cell Comn

Circuit/System Testing

Note:

- The vehicle may be equipped with sectioned coax. Test each section and replace only the faulty section, not the entire length of coax.
- The following verification requires the vehicle to be outside with an unobstructed view of the southern sky. Allow 5 min after turning the ignition ON for the GPS satellites to acquire vehicle signal.

1. Ignition OFF and all vehicle systems OFF, disconnect the violet primary cellular coax cable connector at the K73 Telematics Communication Interface Control Module. It may take up to 2 min for all vehicle systems to power down.
2. Using the *EL-49903-1* Test Antenna Navn-Cell Comn connect the violet coax cable to the K73 Telematics Communication Interface Control Module. Place the test antenna on the roof of the vehicle, ignition ON.

3. Verify the DTC does not set or a call can be completed to the OnStar Call Center while operating the vehicle within the conditions for running the DTC.

⇒ **If the DTC sets or a call can not be completed to the OnStar Call Center**

Replace the K73 Telematics Communications Interface Control Module.

⇓ **If the DTC does not set or a call can be completed to the OnStar Call Center**

4. Ignition OFF.
5. Disconnect the *EL-49903-1* Test Antenna Navn-Cell Comn from the K73 Telematics Communication Interface Control Module
6. Test the coax cable. Refer to Component Testing.

⇒ **If the coax cable does not pass the test**

Replace the coax cable.

⇓ **If the coax cable passes the test**

7. Test or replace the T4G Cellular Phone, Navigation, and Digital Radio Antenna.

Component Testing

Caution: Refer to *Test Probe Caution on page 0-9*

Note:

- Before testing the coax cable, check the cable exterior for being pinched, cut, damaged, or having loose connections at the components, which can cause reception issues.
- To prevent false readings when testing the center coax terminals, use care not to ground the test probe on the outer housing/shield.

Coax Cable Test

1. Test for less than 5 Ω between the coax cable center terminal end to end.

⇒ **If 5 Ω or greater**

Replace the coax cable.

⇓ **If less than 5 Ω**

2. Test for greater than 5 Ω between the coax cable outer shield end to end.

⇒ **If 5 Ω or greater**

Replace the coax cable.

⇓ **If less than 5 Ω**

3. Test for infinite resistance between the coax cable center terminal and the coax cable outer shield.

⇒ **If less than infinite resistance**

Replace the coax cable.

⇓ **If infinite resistance**

4. All OK.

Repair Instructions

Perform the *Diagnostic Repair Verification on page 6-123* after completing the repair procedure.

- *Radio Antenna Base Replacement on page 8-59*
- *Control Module References on page 6-3* for telematics communication interface control module replacement, setup, and programming

DTC B2476 or B2482

Diagnostic Instructions

- Perform the *Diagnostic System Check - Vehicle on page 6-91* prior to using this diagnostic procedure.
- Review *Strategy Based Diagnosis on page 6-83* for an overview of the diagnostic approach.
- *Diagnostic Procedure Instructions on page 6-84* provides an overview of each diagnostic category.

DTC Descriptors

DTC B2476 04: Cellular Phone Select Service Switch Open

DTC B2476 59: Cellular Phone Select Service Switch Protection Time-out

DTC B2482 00: Cellular Phone Select Service Switch Range/Performance

Diagnostic Fault Information

Circuit	Short to Ground	Open/High Resistance	Short to Voltage	Signal Performance
10 V Reference	1	B2476 04	B2476 04	—
Signal	1	1	B2476 59	B2476 59, B2482 00
Ground	—	B2476 04	—	—
1. OnStar® Buttons Inoperative				

Circuit/System Description

The OnStar® button assembly consists of 3 buttons: Call/Answer, OnStar® Call Center, and OnStar® Emergency. The telematics communication interface control module supplies the OnStar® button assembly with 10 V via the 10 V reference circuit. Each of the buttons, when pressed, completes the circuit across a resistor or set of resistors allowing a specific voltage to be returned to the telematics communication interface control module over the signal circuit. Depending upon the voltage range returned, the telematics communication interface control module is able to identify which button has been pressed.

Conditions for Running the DTC

- Ignition ON.
- Battery voltage must be between 9–16 V.

Conditions for Setting the DTC

B2476 04

The telematics communication interface control module detects a short to voltage or an open/high resistance on the 10 V reference circuit.

B2482 and B2476 59

The telematics communication interface control module detects a valid signal on the keypad signal circuit for longer than 15 s. If one of the OnStar® buttons is held or stuck for 15 s or greater, the telematics communication interface control module will set this DTC.

Action Taken When the DTC Sets

- The OnStar® status LED turns red.
- No calls can be placed.
- The telematics communication interface control module will ignore all inputs from the OnStar® button assembly.

Conditions for Clearing the DTC

- The condition responsible for setting the DTC no longer exists.
- A history DTC will clear once 50 consecutive malfunction-free ignition cycles have occurred.

Reference Information

Schematic Reference

OnStar/Telematics Schematics on page 8-6

Connector End View Reference

Component Connector End Views on page 11-455

Description and Operation

OnStar Description and Operation on page 8-63

Electrical Information Reference

- *Circuit Testing on page 11-871*
- *Connector Repairs on page 11-895*
- *Testing for Intermittent Conditions and Poor Connections on page 11-877*
- *Wiring Repairs on page 11-883*

Scan Tool Reference

Control Module References on page 6-3 for scan tool information

Circuit/System Verification

Note: Contact the OnStar® Call Center first before pressing the emergency button in order to notify them of the test.

1. Ignition ON.
2. Verify that each button of the S51 Telematics Button Assembly operates normally by pressing each button individually.

⇒ **If none of the buttons operate normally**

Refer to Circuit/System Testing

⇒ **If some, but not all, of the buttons operate normally**

Test or replace the A10 Inside Rearview Mirror

⇓ **If all of the buttons operate normally**

3. All OK.

Circuit/System Testing

1. Ignition OFF and all vehicle systems OFF, disconnect the harness connector at the A10 Inside Rearview Mirror. It may take up to 2 min for all vehicle systems to power down.
2. Test for less than 10 Ω between the ground circuit terminal 5 and ground.

⇒ **If 10 Ω or greater**

2.1. Ignition OFF.

2.2. Test for less than 2 Ω in the ground circuit end to end.

⇒ If 2 Ω or greater, repair the open/high resistance in the circuit.

⇒ If less than 2 Ω, repair the open/high resistance in the ground connection.

⇓ **If less than 10 Ω**

3. Ignition ON.
4. Test for 8.0–10.5 V between the 10 V reference circuit terminal 4 and ground.

⇒ **If less than 8.0 V**

4.1. Ignition OFF, disconnect the harness connector at the K73 Telematics Communication Interface Control Module.

4.2. Test for infinite resistance between the 10 V reference circuit and ground.

⇒ If less than infinite resistance, repair the short to ground on the circuit.

⇓ If infinite resistance

4.3. Test for less than 2 Ω in the 10 V reference circuit end to end.

⇒ If 2 Ω or greater, repair the open/high resistance in the circuit.

⇒ If less than 2 Ω, replace the K73 Telematics Communication Interface Control Module.

⇒ **If greater than 10.5 V**

4.1. Ignition OFF, disconnect the harness connector at the K73 Telematics Communication Interface Control Module, ignition ON.

4.2. Test for less than 1 V between the 10 V reference circuit and ground.

⇒ If 1 V or greater, repair the short to voltage on the circuit.

⇒ If less than 1 V, replace the K73 Telematics Communication Interface Control Module.

⇓ **If between 8.0–10.5 V**

5. Ignition OFF and all vehicle systems OFF.
6. Test for 500–900 Ω between the signal circuit terminal 3 and ground.

⇒ **If less than 500 Ω**

6.1. Disconnect the X1 harness connector at the K73 Telematics Communication Interface Control Module.

6.2. Test for infinite resistance between the signal circuit and ground.

⇒ If less than infinite resistance, repair the short to ground on the circuit.

⇒ If infinite resistance, replace the K73 Telematics Communication Interface Control Module.

⇒ **If greater than 900 Ω**

6.1. Disconnect the X1 harness connector at the K73 Telematics Communication Interface Control Module, ignition ON.

6.2. Test for less than 1 V between the signal circuit and ground.

⇒ If 1 V or greater, repair the short to voltage on the circuit.

⇓ If less than 1 V

6.3. Ignition OFF.

6.4. Test for less than 2 Ω in the signal circuit end to end.

⇒ If 2 Ω or greater, repair the open/high resistance in the circuit.

⇒ If less than 2 Ω, replace the K73 Telematics Communication Interface Control Module.

⇓ **If between 500–900 Ω**

7. Test or replace the A10 Inside Rearview Mirror.

Repair Instructions

Perform the *Diagnostic Repair Verification on page 6-123* after completing the repair.

- *Inside Rearview Mirror Replacement on page 4-215*
- *Control Module References on page 6-3* for telematics communication interface control module replacement, programming, and setup.

Symptoms - Cellular Communication

Note: The following steps must be completed before using the symptom table.

1. Perform the *Diagnostic System Check - Vehicle on page 6-91* before using the Symptom Tables in order to verify that all of the following are true:
   - There are no DTCs set.
   - The control modules can communicate via the serial data link.
2. Review the system operation in order to familiarize yourself with the system functions. Refer to *OnStar Description and Operation on page 8-63*.

Visual/Physical Inspection

- Inspect for aftermarket devices which could affect the operation of the OnStar System. Refer to *Checking Aftermarket Accessories on page 11-871*.
- Inspect for easily accessible or visible system components for obvious damage or conditions which could cause the symptom.

Intermittent

Faulty electrical connections or wiring may be the cause of intermittent conditions. Refer to *Testing for Intermittent Conditions and Poor Connections on page 11-877*.

Symptom List

Refer to a symptom diagnostic procedure from the following list in order to diagnose the symptom:

- *No Global Positioning System (GPS) Reception on page 8-39*
- *OnStar Microphone Malfunction on page 8-36*
- *OnStar Audio Malfunction on page 8-37*
- *OnStar Button LED Malfunction on page 8-42*
- *OnStar Call Center Remote Function Requests Malfunction on page 8-44*
- *OnStar Button Malfunction on page 8-45*
- *Unable to Contact OnStar Call Center on page 8-51*
- *OnStar Voice Recognition Malfunction on page 8-52*
- *OnStar Steering Wheel Control Functions Malfunction on page 8-47*

Symptoms - Entertainment

Important: The following steps must be completed before using the symptom table.

1. Perform the *Diagnostic System Check - Vehicle on page 6-91* before using the Symptom Tables in order to verify that all of the following are true:
   - There are no DTCs set.
   - The control modules can communicate via the serial data link.
2. Review the system operation in order to familiarize yourself with the system functions. Refer to *Radio/ Audio System Description and Operation on page 8-69*.

Visual/Physical Inspection

- Inspect for aftermarket devices which could affect the operation of the Radio/Audio System. Refer to *Checking Aftermarket Accessories on page 11-871*.
- Inspect for easily accessible or visible system components for obvious damage or conditions which could cause the symptom.

Intermittent

Faulty electrical connections or wiring may be the cause of intermittent conditions. Refer to *Testing for Intermittent Conditions and Poor Connections on page 11-877*.

Symptom List

Refer to a symptom diagnostic procedure from the following list in order to diagnose the symptom:

- *Application Malfunction on page 8-28*
- *Auxiliary Audio Input Malfunction on page 8-30*
- *Bluetooth Malfunction on page 8-33*
- *Digital Radio Poor or No Reception on page 8-34*
- *Radio Poor Reception on page 8-47*
- *Speaker Malfunction on page 8-49*

Application Malfunction

Diagnostic Instructions

- Perform the *Diagnostic System Check - Vehicle on page 6-91* prior to using this diagnostic procedure.
- Review *Strategy Based Diagnosis on page 6-83* for an overview of the diagnostic approach.
- *Diagnostic Procedure Instructions on page 6-84* provide an overview of each diagnostic category.

Circuit/System Description

The term application refers to any piece of software that works on a system (hardware) that is being operated by it's own software. Applications are typically small software programs which uses the hardware to perform a specific task, as opposed to operating the entire system.

Diagnostic Aids

- For an application to be used, it must be installed on both the vehicle infotainment system and a compatible mobile device.
- The application must work correctly on the device to work with the vehicle infotainment system.
- The user may be required to log-in to the application on the mobile device before using the application from the vehicle controls.
- Applications use the mobile device and connection to a service provider to operate. Connection quality issues, or service provider data transmission issues can give the appearance of a vehicle malfunction.
- The device must be connected to the system. this may be done wirelessly via Bluetooth ®, or via the vehicle USB port.

When a mobile device is connected via Bluetooth®, some or all of the device controls may be unavailable from the radio controls. This varies dependant upon the device being used. Refer to the vehicle owners manual, supplements, and the device manufacturers information for information on devices, control, and operation.

Refer to the device manufacturers information for the preferred connection method.

- The device must be unlocked, and any additional applications should be closed.
- If the device has any sound enhancement features such as noise reduction or echo control, these features should be turned off.
- A low battery condition in the mobile device may not allow the device to connect to the system, or can create communication issues with the device. Verify the device battery state of charge and re-charge or replace as needed.
- If a 'Please See Device' or similar type error message is displayed, this may indicate the device has lost it's connection to the vehicle, or the device has lost it's external data connection.
- If a cable is used for connection, attempt to connect the device using a different cable; cables can deteriorate over time or become damaged.

Reference Information

Schematic Reference

Radio/Navigation System Schematics on page 8-4

Connector End View Reference

Component Connector End Views on page 11-455

Description and Operation

Radio/Audio System Description and Operation on page 8-69

Electrical Information Reference

- *Circuit Testing on page 11-871*
- *Connector Repairs on page 11-895*
- *Testing for Intermittent Conditions and Poor Connections on page 11-877*
- *Wiring Repairs on page 11-883*

Scan Tool Reference

Control Module References on page 6-3 for scan tool information

Circuit/System Verification

1. Verify the application is installed on the mobile device and is up to date.

⇒ **If the application is not installed or is not up to date.**

Install or update the application on the device.

⇓ **If the application is installed on the mobile device and is up to date**

2. Verify the application operates correctly on the mobile device.

⇒ **If the application is not operating correctly on the mobile device.**

Refer to the application website

⇓ **If the application is operating correctly on the mobile device.**

3. Verify the radio calibrations are current.

⇒ **If the radio calibrations are not current**

Reprogram the radio and re-evaluate the concern.

⇓ **If no update calibrations are available**

4. Verify the application is installed on the radio and is up to date.

⇒ **If the application is not installed or is not up to date.**

Install or update the application on the radio.

⇓ **If the application is installed on the radio and is up to date**

5. Vehicle in Service Mode, radio ON, connect the mobile device to the infotainment system. Refer to the owners manual for information on the preferred connection method for the device.

⇒ **If the mobile device cannot connect to the vehicle infotainment system.**

- If unable to connect via Bluetooth, refer to *Bluetooth Malfunction on page 8-33*.
- If unable to connect via USB, refer to *Auxiliary Audio Input Malfunction on page 8-30*.

⇓ **If the mobile device connects to the vehicle infotainment system.**

6. Launch the application.
7. Verify the applications operates properly with the vehicle infotainment system.

⇒ **If the application does not function properly**

Refer to diagnostic aids.

⇓ **If the application functions properly**

8. All OK.

Repair Instructions

Perform the *Diagnostic Repair Verification on page 6-123* after completing the diagnostic procedure.

Control Module References on page 6-3 for radio replacement, setup, and programming

Auxiliary Audio Input Malfunction

Diagnostic Instructions

- Perform the *Diagnostic System Check - Vehicle on page 6-91* prior to using this diagnostic procedure.
- Review *Strategy Based Diagnosis on page 6-83* for an overview of the diagnostic approach.
- *Diagnostic Procedure Instructions on page 6-84* provide an overview of each diagnostic category.

Diagnostic Fault Information

Circuit	Short to Ground	Open/High Resistance	Short to Voltage	Signal Performance
Auxiliary Audio Common Signal	—	6	—	—
Auxiliary Detection Signal	5	6	—	—
Left Auxiliary Audio Signal	2	2	2, 4	—
Right Auxiliary Audio Signal	3	3	3, 4	—
USB Cable	1	1	1	—

1. USB port Inoperative
2. No left side audio from device connected to AUX jack
3. No right side audio from device connected to AUX jack
4. Noticeable distortion may be present in affected audio channel
5. Radio does not detect auxiliary device connection, AUX not available as input selection
6. AUX always available as an input selection, with or without auxiliary device connected

Circuit/System Description

Auxiliary Audio Input Jack

The 3.5 mm auxiliary audio input jack is located in the I/P. All circuits from the auxiliary jack are connected directly to the radio. Audio signals from the device are sent to the radio from the auxiliary input jack via the left, right, and common audio signal circuits.

The infotainment system may also have an additional auxiliary audio input jack available on the radio face. This input interfaces internally with the radio, no external circuits are involved.

When a portable audio playback device is connected to an auxiliary jack, an internal switch detects the connection and the radio will switch to AUX as the audio source.

USB Port

The vehicle may be equipped with a USB port in the I/P. This port allows USB connectivity to the infotainment system from portable media players or a USB storage device (memory stick/flash drive). When a device is connected to the USB port, the system detects the device and switches to USB as the audio source. Once connected, the device can be controlled from the radio controls.

The USB port is connected to the radio via a standard USB cable. Mini type USB connectors are used to connect the cable at the USB port and at the radio. Standard USB male to female connections are typically used for connecting USB cables together where an in-line connection is required. An in-line cable connection is typically found between the console and I/P harness.

Not all portable media player devices are compatible. Refer to the owner's manual for information on USB devices, control, and operation.

Diagnostic Aids

Auxiliary Audio Input Jack

- When a device is first connected to the 3.5 mm (1/8 in) input jack the infotainment system automatically switches to that device. If an auxiliary device has already been connected, press the AUX or CD/AUX button to select the device.
- If the system detects the device, but the audio is not heard or is not clear, attempt to connect the device using a different cable; cables can deteriorate over time or become damaged.
- Playback of an audio device that is connected to the 3.5 mm jack can only be controlled using the controls on the device.
- The volume control on the device may need to be adjusted to ensure sufficient playback volume through the infotainment system.

USB

- When a device is first connected to the USB port, the infotainment system automatically switches to that device. If an auxiliary device has already been connected, press the AUX or CD/AUX button to select the device.
- A low battery condition in a portable media player may not allow the device to connect to the system, or can create communication issues with the device. Verify the device battery state of charge and re-charge or replace as needed.
- Connect the device directly to the USB port if possible. Only use a cable if it is required to connect the device. The use of extension cables can cause communication issues.
- If a cable is required for connection, attempt to connect the device using a different cable; cables can deteriorate over time or become damaged.
- Attempt audio playback from multiple USB devices when diagnosing USB concerns. Device compatibility can vary based on vehicle equipment. If the infotainment system is capable of operating any USB type device, the cause of the concern is not with the vehicle system. The inoperative device(s) may be incompatible or contain no recognized media types.
- If a 'Device Not Supported' or similar type error message is displayed, this indicates the system has connected to the device but cannot communicate with it properly. This does not indicate an issue with the vehicle system. The device may be incompatible, may require a 'reset', or may require an update to its software/firmware.
- If a 'No Supported Data Found' or similar type error message is displayed, this indicates the system has connected to the device and is communicating, but cannot find any compatible files/data. This does not indicate an issue with the vehicle system. Verify the device contains compatible media/file types.
- Poor connections or damaged USB cables can cause intermittent or no operation of USB devices. Inspect connectors, terminals, and cables for damage and replace components as necessary. Ensure all USB inline connections and connections at components are fully seated and connector position retainers/locks are secure.

Reference Information

Schematic Reference

Radio/Navigation System Schematics on page 8-4

Connector End View Reference

Component Connector End Views on page 11-455

Description and Operation

Radio/Audio System Description and Operation on page 8-69

Electrical Information Reference

- *Circuit Testing on page 11-871*
- *Connector Repairs on page 11-895*
- *Testing for Intermittent Conditions and Poor Connections on page 11-877*
- *Wiring Repairs on page 11-883*

Scan Tool Reference

Control Module References on page 6-3 for scan tool information

Special Tools

- *EL-50334-20* Multi-Media Interface Tester (MIT)
- *EL-50334-50* USB Cable and Adapter Kit

Circuit/System Verification

Auxiliary Audio Input Jack - Console

1. Verify no DTCs are present.

⇒ **If any DTCs are present**

Refer to *Diagnostic Trouble Code (DTC) List - Vehicle on page 6-92*.

⇓ **If no DTCs are present**

2. Vehicle in Service Mode, radio ON.
3. Verify the infotainment system switches to AUX as the audio source with the *EL-50334-20* Multi-Media Interface Tester (MIT) connected to the auxiliary audio input jack.

⇒ **If the infotainment system does not switch to AUX as the audio source**

Refer to Circuit/System Testing – Auxiliary Audio Input Jack.

⇓ **If the infotainment system switches to AUX as the audio source**

4. Verify the audio from the *EL-50334-20* Multi-Media Interface Tester (MIT) is heard through the vehicle infotainment system while operating the test tool to begin audio playback.

⇒ **If audio is not heard from the test tool**

Refer to Circuit/System Testing – Auxiliary Audio Input Jack

⇓ **If audio is heard from the test tool**

5. All OK

Auxiliary Audio Input Jack - Radio (If Equipped)

1. Verify no DTCs are present.

⇒ **If any DTCs are present**

Refer to *Diagnostic Trouble Code (DTC) List - Vehicle on page 6-92*.

⇓ **If no DTCs are present**

2. Vehicle in Service Mode, radio ON.
3. Verify the infotainment system switches to AUX as the audio source with the *EL-50334-20* Multi-Media Interface Tester (MIT) connected to the auxiliary audio input jack.

⇒ **If the infotainment system does not switch to AUX as the audio source**

Replace the A11 Radio.

⇓ **If the infotainment system switches to AUX as the audio source**

4. Verify the audio from the *EL-50334-20* Multi-Media Interface Tester (MIT) is heard through the vehicle infotainment system while operating the test tool to begin audio playback.

⇒ **If audio is not heard from the test tool**

Replace the A11 Radio.

⇓ **If audio is heard from the test tool**

5. All OK.

USB Port

1. Verify no DTCs are present.

⇒ **If any DTCs are present**

Refer to *Diagnostic Trouble Code (DTC) List - Vehicle on page 6-92*.

⇓ **If no DTCs are present**

2. Vehicle in Service Mode, radio ON.
3. Verify the infotainment system switches to USB as the audio source with the *EL-50334-20* Multi-Media Interface Tester (MIT) connected to the USB port.

⇒ **If the infotainment system does not switch to USB as the audio source**

Refer to Circuit/System Testing – USB Port.

⇓ **If the infotainment system switches to USB as the audio source**

4. Verify the audio from the *EL-50334-20* Multi-Media Interface Tester (MIT) is heard through the vehicle infotainment system while operating the system to play audio from the test tool.

⇒ **If audio is not heard from the test tool**

Refer to Circuit/System Testing – USB Port.

⇓ **If audio is heard from the test tool**

5. All OK.

Circuit/System Testing

Auxiliary Audio Input Jack

1. Vehicle OFF, disconnect the X1 harness connector at the X83 Auxiliary Audio Input. Vehicle in Service Mode, radio ON.
2. Test for 2.5–3.5 V between the signal circuit terminal 5 and ground.

⇒ **If less than 2.5 V**

2.1. Vehicle OFF, disconnect the X1 harness connector at the A11 Radio.

2.2. Test for infinite resistance between the signal circuit and ground.

⇒ If less than infinite resistance, repair the short to ground on the circuit.

⇓ If infinite resistance

2.3. Test for less than 2 Ω in the signal circuit end to end

⇒ If 2 Ω or greater, repair the open/high resistance in the circuit.

⇒ If less than 2 Ω, replace the A11 Radio.

⇒ **If greater than 3.5 V**

2.1. Vehicle OFF, disconnect the X1 harness connector at the A11 Radio, Vehicle in Service Mode.

2.2. Test for less than 1 V between the signal circuit and ground.

⇒ If 1 V or greater, repair the short to voltage on the circuit.

⇒ If less than 1 V, replace the A11 Radio.

⇓ **If between 2.5–3.5 V**

3. Test for less than 1 V between the signal circuits listed below and ground:
   - Left auxiliary audio signal circuit terminal 1
   - Right auxiliary audio signal circuit terminal 2
   - Auxiliary audio common signal circuit terminal 3

⇒ **If 1 V greater**

3.1. Vehicle OFF, disconnect the X1 harness connector at the A11 Radio. Vehicle in Service Mode.

3.2. Test for less than 1 V between the signal circuit and ground.

⇒ If 1 V or greater, repair the short to voltage on the circuit.

⇒ If less than 1 V, replace the A11 Radio.

⇓ **If less than 1 V**

4. Vehicle OFF, disconnect the X1 harness connector at the A11 Radio.
5. Test for infinite resistance between the signal circuits listed below and ground:
   - Auxiliary audio common signal circuit terminal 23
   - Left auxiliary audio signal circuit terminal 24
   - Right auxiliary audio signal circuit terminal 10

⇒ **If less than infinite resistance**

Repair the short to ground on the circuit.

⇓ **If infinite resistance**

6. Test for less than 5 Ω between the signal circuit terminals listed below:
   - A11 Radio terminal 24 X1 and the X83 Auxiliary Audio Input terminal 1 X1
   - A11 Radio terminal 10 X1 and the X83 Auxiliary Audio Input terminal 2 X1
   - A11 Radio terminal 23 X1 and the X83 Auxiliary Audio Input terminal 3 X1

⇒ **If 5 Ω greater**

Repair the open/high resistance in the circuit.

⇓ **If less than 5 Ω**

7. Replace the X83 Auxiliary Audio Input. Connect all harness connectors.
8. Connect and operate the *EL-50334-20* Multi-Media Interface Tester (MIT).

9. Verify the audio from the test tool is heard through the vehicle infotainment system.

⇒ **If audio is not heard from the test tool**

Replace the A11 Radio.

⇓ **If audio is heard from the test tool**

10. All OK.

USB Port

1. Vehicle OFF, disconnect the USB cable connection at the A11 Radio.

   Note: USB cables and adapters for the following tests are found in the *EL-50334-50* USB Cable and Adapter Kit.

2. Connect the EL-50334-2 Type A female to Mini B male USB Cable to the A11 Radio.
3. Connect the *EL-50334-20* Multi-Media Interface Tester (MIT) to the EL-50334-2 cable. Vehicle in Service Mode, radio ON
4. Verify the infotainment system switches to USB as the audio source.

⇒ **If the infotainment system does not switch to USB as the audio source**

Replace the A11 Radio.

⇓ **If the infotainment system switches to USB as the audio source**

5. Vehicle OFF, connect the vehicle USB cable to the A11 Radio. Disconnect the USB cable at the X83 Auxiliary Audio Input.

   Note: The EL-50334–4 adapter may be required for the following test.

6. Connect the *EL-50334-20* Multi-Media Interface Tester (MIT) to the vehicle USB cable. Vehicle in Service Mode, radio ON.
7. Verify the infotainment system switches to USB as the audio source.

⇒ **If the infotainment system does not switch to USB as the audio source**

Replace the USB cable assembly.

⇓ **If the infotainment system switches to USB as the audio source**

8. Test or replace the X83 Auxiliary Audio Input.

Repair Instructions

Perform the *Diagnostic Repair Verification on page 6-123* after completing the repair.

- *Multimedia Receptacle Replacement on page 8-58*
- *Control Module References on page 6-3* for radio replacement, programming, and setup.

Bluetooth Malfunction

Diagnostic Instructions

- Perform the *Diagnostic System Check - Vehicle on page 6-91* prior to using this diagnostic procedure.
- Review *Strategy Based Diagnosis on page 6-83* for an overview of the diagnostic approach.
- *Diagnostic Procedure Instructions on page 6-84* provide an overview of each diagnostic category.

Circuit/System Description

The Bluetooth ® antenna is internal to the telematics communication interface control module and is used to send and receive signals from a Bluetooth ® enabled cellular phone. The antenna utilizes no cabling and is not external to the vehicle.

In order to use hands-free calling, the cellular phone must be paired to the vehicle. Up to five devices can be paired to the vehicle at one time, but only one can be connected at any given time. To pair a phone, the customer must know how to operate the Bluetooth ® functionality of their phone. The pairing process must only be done one time for each phone, unless that phone's information is deleted. For safety reasons, the pairing process is disabled while the vehicle is moving.

Diagnostic Aids

- The purpose of this diagnostic is to verify the ability of the telematics communication interface control module to pair to a Bluetooth ® device.
- Before performing this test, verify compatibility of the cellular phone(s) the customer is attempting to use with the vehicle. Based on the cellular phone's service provider and the manufacturer's implementation of Bluetooth ®, not all phones support all available Bluetooth ® functionality. A vehicle and feature compatibility list will be provided via the GM Bluetooth ® website: http://www.onstar.com/web/Bluetooth/
- If the vehicle passes the following tests and a compatible device is being used, the concern may be due to a device malfunction or an incomplete/improper pairing attempt.
- A Bluetooth ® test tool or equivalent can also be used to verify the ability of the customers cellular phone(s) to pair with another device.

Schematic Reference

OnStar/Telematics Schematics on page 8-6

Connector End View Reference

Component Connector End Views on page 11-455

Description and Operation

OnStar Description and Operation on page 8-63

Electrical Information Reference

- *Circuit Testing on page 11-871*
- *Connector Repairs on page 11-895*
- *Testing for Intermittent Conditions and Poor Connections on page 11-877*
- *Wiring Repairs on page 11-883*

Scan Tool Reference

Control Module References on page 6-3 for scan tool information

Special Tools

EL-50334-20 Multi-Media Interface Tester (Multi-Media Interface Tool)

Circuit/System Verification

1. Vehicle in Service Mode.
2. Verify the infotainment system successfully pairs with the Multi-Media Interface Tool.

Note: The Multi-Media Interface Tool can be used to test either cellular phone or streaming audio functions. Refer to the tool instructions, and perform the appropriate test(s) related to the customers concern in the following steps.

⇒ **If the infotainment system does not successfully pair with the Multi-Media Interface Tool.**

2.1. Replace the Bluetooth® Antenna.

2.2. Verify the infotainment system successfully pairs with the Multi-Media Interface Tool.

⇒ If the infotainment system does not successfully pair with the Multi-Media Interface Tool, replace the K73 Telematics Communication Interface Control Module.

⇓ If the infotainment system successfully pairs with the Multi-Media Interface Tool.

2.3. All OK.

⇓ **If the infotainment system successfully pairs with the Multi-Media Interface Tool.**

3. All OK.

Repair Instructions

Perform the *Diagnostic Repair Verification on page 6-123* after completing the repair procedure.

Control Module References on page 6-3 for telematics communication interface control module replacement, programming, and setup.

Digital Radio Poor or No Reception

Diagnostic Instructions

- Perform the *Diagnostic System Check - Vehicle on page 6-91* prior to using this diagnostic procedure.
- Review *Strategy Based Diagnosis on page 6-83* for an overview of the diagnostic approach.
- *Diagnostic Procedure Instructions on page 6-84* provides an overview of each diagnostic category.

DTC Descriptors

DTC B125C 01: Satellite Antenna Circuit Short to Battery
DTC B125C 02: Satellite Antenna Circuit Short to Ground
DTC B125C 04: Satellite Antenna Circuit Open

Circuit/System Description

The digital radio receiver, located inside the radio, receives digital radio information from the digital radio antenna located on the outside of the vehicle. The digital radio receiver is connected to the digital radio antenna via a shielded coax cable. The digital radio antenna contains an amplifier which is powered by the radio through the coax cable.

Conditions for Running the DTC

This DTC is run every 300 milliseconds.

Conditions for Setting the DTC

The radio detects a circuit fault in the digital radio antenna.

Action Taken When the DTC Sets

The radio displays No XM Signal or Check Antenna.

Conditions for Clearing the DTC

- A current DTC clears when the condition for setting the DTC is no longer present.
- A history DTC clears after 100 malfunction-free ignition cycles.

Diagnostic Aids

The digital radio antenna requires a clear line of sight to the sky to operate properly. Reception may be limited, intermittent, or unavailable inside structures.

Reference Information

Schematic Reference

Radio/Navigation System Schematics on page 8-4

Connector End View Reference

Component Connector End Views on page 11-455

Description and Operation

Radio/Audio System Description and Operation on page 8-69

Electrical Information Reference

- *Circuit Testing on page 11-871*
- *Connector Repairs on page 11-895*
- *Testing for Intermittent Conditions and Poor Connections on page 11-877*
- *Wiring Repairs on page 11-883*

Special Tools

EL-48028 Digital Radio Test Antenna

Circuit/System Verification

1. With the vehicle outside in an area with an unobstructed view of the southern sky, tune to XM.
2. Verify DTC B125C is not set as current and the No XM Signal message is not displayed on the radio.

⇒ **If DTC B125C is set as current or the No XM Signal message is displayed.**

Refer to Circuit/System Testing.

⇓ **If DTC B125C is not set as current and the No XM Signal message is not displayed.**

3. All OK.

Circuit/System Testing

1. Vehicle OFF, disconnect the digital radio antenna coax cable from the A11 Radio. Connect the *EL-48028* Digital Radio Test Antenna to the radio and place on the roof of the vehicle.
2. Vehicle in Service Mode, radio tuned to XM channel 1.
3. Verify DTC B125C is not set as current and XM reception is improved.

⇒ **If DTC B125C is set as current or XM reception is not improved**

Replace the A11 Radio.

⇓ **If DTC B125C is not set as current and XM reception is improved**

4. Vehicle OFF, disconnect the digital radio antenna coax cable from the T4G Cellular Phone, Navigation, and Digital Radio Antenna.
5. Verify the digital radio antenna coax cable passes the coax cable component test. Refer to Component Testing.

⇒ **If the coax cable does not pass the test**

Replace the antenna coax cable

⇓ **If the coax cable passes the test**

6. Test or replace the T4G Cellular Phone, Navigation, and Digital Radio Antenna.

Component Testing

Caution: Refer to *Test Probe Caution on page 0-9*.

Note: Before testing the coax cable, check the cable exterior for being pinched, cut, damaged, or having loose connections at the components, which can cause reception issues.

To prevent false reading when testing the center coax terminals, use care not to ground the test probe on the outer housing/shield.

Coax Cable Test

1. Vehicle OFF, disconnect the coax cable at both components.
2. Test for less than 5 Ω between coax cable center terminal end to end.

⇒ **If 5 Ω or greater**

Replace the coax cable

⇓ **If less than 5 Ω**

3. Test for less than 5 Ω between the coax cable outer shield end to end.

⇒ **If 5 Ω or greater**

Replace the coax cable

⇓ **If less than 5 Ω**

4. Test for infinite resistance between the coax cable center terminal and the coax cable outer shield.

⇒ **If less than infinite resistance**

Replace the coax cable

⇓ **If infinite resistance**

5. All OK

Repair Instructions

Perform the *Diagnostic Repair Verification on page 6-123* after completing the repair.

- *Radio Antenna Base Replacement on page 8-59*
- *Control Module References on page 6-3* for radio replacement, programming, and setup.

OnStar Microphone Malfunction

Diagnostic Instructions

- Perform the *Diagnostic System Check - Vehicle on page 6-91* prior to using this diagnostic procedure.
- Review *Strategy Based Diagnosis on page 6-83* for an overview of the diagnostic approach.
- *Diagnostic Procedure Instructions on page 6-84* provides an overview of each diagnostic category.

Diagnostic Fault Information

Circuit	Short to Ground	Open/High Resistance	Short to Voltage	Signal Performance
Signal Terminal 9 X2	B2455 02	B2455 04	B2455 04	—
Signal Terminal 10 X2	B2455 02	B2455 04	B2455 04	—

Circuit/System Description

The telematics communication interface control module provides the Cellular Phone Microphone with a supplied voltage on the cellular phone microphone signal circuit. When the cellular phone microphone is in use, voice data from the user is sent back to the telematics communication interface control module on the signal circuit.

Reference Information

Schematic Reference

OnStar/Telematics Schematics on page 8-6

Connector End View Reference

Component Connector End Views on page 11-455

Description and Operation

OnStar Description and Operation on page 8-63

Electrical Information Reference

- *Circuit Testing on page 11-871*
- *Connector Repairs on page 11-895*
- *Testing for Intermittent Conditions and Poor Connections on page 11-877*
- *Wiring Repairs on page 11-883*

Scan Tool Reference

Control Module References on page 6-3 for scan tool information

Circuit/System Verification

1. Ignition ON.
2. Verify that DTC B2455 is not set.

⇒ **If DTC B2455 is set**

Refer to *DTC B2455 on page 8-19*.

⇓ **If DTC B2455 is not set**

3. Verify that a successful OnStar voice command can be made.

⇒ **If your voice can not be heard clearly.**

Refer to Circuit/System Testing – Microphone Malfunction.

⇓ **If your voice can be heard clearly**

4. All OK.

Circuit/System Testing

Microphone Malfunction

1. Ignition OFF, disconnect the harness connector at the B24 Cellular Phone Microphone, ignition ON.
2. Test for 8.0-10.5 V between the signal circuit terminal B and ground.

⇒ **If less than 8.0 V**

2.1. Ignition OFF, disconnect the X2 harness connector at the K73 Telematics Communication Interface Control Module.

2.2. Test for infinite resistance between the signal circuit and ground.

⇒ If less than infinite resistance, repair the short to ground in the circuit.

⇓ If infinite resistance

2.3. Test for less than 2 Ω in the signal circuit end to end.

⇒ If 2 Ω or greater, repair the open/high resistance in the circuit.

⇒ If less than 2 Ω, replace the vehicle K73 Telematics Communication Interface Control Module.

⇒ **If greater than 10.5 V**

2.1. Ignition OFF, disconnect the X2 harness connector at the K73 Telematics Communication Interface Control Module, ignition ON.

2.2. Test for less than 1 V between the signal circuit and ground.

⇒ If 1 V or greater, repair the short to voltage on the circuit.

⇓ If less than 1 V, replace the K73 Telematics Communication Interface Control Module.

⇓ **If between 8.0-10.5 V**

3. Test for less than 1 V between the signal circuit terminal A and ground.

⇒ **If greater than 1 V**

3.1. Ignition OFF, disconnect the X2 harness connector at the K73 Telematics Communication Interface Control Module, ignition ON.

3.2. Test for less than 1 V between the signal circuit and ground.

⇒ If 1 V or greater, repair the short to voltage in the circuit.

⇒ If less than 1 V, repair the K73 Telematics Communication Interface Control Module.

⇓ **If less than 1 V**

4. Test for greater than 8 V between the signal circuit terminal B and the signal circuit terminal A.

⇒ **If less than 8 V**

4.1. Ignition OFF, disconnect the X2 harness connector at the K73 Telematics Communication Interface Control Module.

4.2. Test for infinite resistance between the signal circuit and ground.

⇒ If less than infinite resistance, repair the short to ground in the circuit.

⇓ If infinite resistance

4.3. Test for less than 2 Ω in the signal circuit end to end.

⇒ If 2 Ω or greater, repair the open/high resistance in the circuit.

⇒ If less than 2 Ω, replace the vehicle K73 Telematics Communication Interface Control Module.

⇓ **If greater than 9 V**

5. Test or replace the B24 Cellular Phone Microphone.

Repair Instructions

Perform the *Diagnostic Repair Verification on page 6-123* after completing the repair procedure.

- *Mobile Telephone Microphone Replacement on page 8-53*
- *Control Module References on page 6-3* for radio or telematics communication interface control module replacement, programming, and setup.

OnStar Audio Malfunction

Diagnostic Instructions

- Perform the *Diagnostic System Check - Vehicle on page 6-91* prior to using this diagnostic procedure.
- Review *Strategy Based Diagnosis on page 6-83* for an overview of the diagnostic approach.
- *Diagnostic Procedure Instructions on page 6-84* provides an overview of each diagnostic category.

Diagnostic Fault Information

Circuit	Short to Ground	Open/High Resistance	Short to Voltage	Signal Performance
Audio High Signal terminal 1	1	1	1	—
Audio Low Signal terminal 2	1	1	1	—
1. No (or Noisy) OnStar® Audio				

Circuit/System Description

When an OnStar® keypress is made, a serial data message is sent to the audio system to mute all radio functions and output OnStar® originated audio. After the audio system is muted, the telematics communication interface control module transmits signals to the audio system on the audio signal and audio common circuits.

Reference Information

Schematic Reference

- *OnStar/Telematics Schematics on page 8-6*
- *Radio/Navigation System Schematics on page 8-4*

Connector End View Reference

Component Connector End Views on page 11-455

Description and Operation

OnStar Description and Operation on page 8-63

Electrical Information Reference

- *Circuit Testing on page 11-871*
- *Connector Repairs on page 11-895*
- *Testing for Intermittent Conditions and Poor Connections on page 11-877*
- *Wiring Repairs on page 11-883*

Scan Tool Reference

Control Module References on page 6-3 for scan tool information

Circuit/System Verification

1. Ignition ON, radio ON.
2. Verify that audio is heard clearly through all speaker channels when tuning radio to a known good station.

⇒ **If audio is not heard clearly**

Refer to *Speaker Malfunction on page 8-49*

⇓ **If audio is heard clearly**

3. Verify that the Connecting to OnStar® message is heard clearly through the audio system when the OnStar® blue button is pressed.

⇒ **If OnStar message is noisy or distorted**

Refer to Circuit/System Testing

⇓ **If OnStar message is heard clearly**

4. All OK.

Circuit/System Testing

1. Ignition OFF and all vehicle systems OFF, disconnect the X2 harness connector at the K73 Telematics Communication Interface Control Module, ignition ON.
2. Test for less than 4 V between each of the signal circuits listed below and ground:
   - Terminal 1
   - Terminal 2

⇒ **If 4 V or greater**

2.1. Ignition OFF, disconnect the X1 harness connector at the A11 Radio, ignition ON.

2.2. Test for less than 1 V between the signal circuits and ground.

⇒ If greater than 1 V, repair the short to voltage on the circuit.

⇒ If less then 1 V, replace the A11 Radio.

⇓ **If less than 4 V**

3. Ignition OFF.
4. Test for infinite resistance between each of the signal circuits listed below and ground:
   - Terminal 1
   - Terminal 2

⇒ **If less than infinite resistance**

Repair the short to ground on the circuit.

⇓ **If infinite resistance**

5. Disconnect the X1 harness connector at the A11 Radio.
6. Test for less than 2 Ω in each of the signal circuits listed below end to end:
   - K73 Telematics Communication Interface Control Module Terminal 1 X2
   - K73 Telematics Communication Interface Control Module Terminal 2 X2

⇒ **If 2 Ω or greater**

Repair the open/high resistance on the circuit.

⇓ **If less than 2 Ω**

7. Replace the K73 Telematics Communication Interface Control Module.
8. Verify that the Connecting to OnStar® message is heard clearly through the audio system when the OnStar® blue button is pressed.

⇒ **If audio is not heard clearly**

Replace the A11 Radio.

⇓ **If audio is heard clearly**

9. All OK.

Repair Instructions

Perform the *Diagnostic Repair Verification on page 6-123* after completing the repair.

Control Module References on page 6-3 for radio or telematics communication interface control module replacement, programming, and setup.

No Global Positioning System (GPS) Reception

Diagnostic Instructions

- Perform the *Diagnostic System Check - Vehicle on page 6-91* prior to using this diagnostic procedure.
- Review *Strategy Based Diagnosis on page 6-83* for an overview of the diagnostic approach.
- *Diagnostic Procedure Instructions on page 6-84* provides an overview of each diagnostic category.

DTC Descriptors

DTC B2462 02: Global Positioning System Short to Ground

DTC B2462 04: Global Positioning System Open

Circuit/System Description

The navigation antenna is connected to the Telematics Communication Interface Control Module. The module supplies 5 V to the antenna to power the internal amplifier through the center conductor of the antenna coax cable.

When the vehicle is equipped with the optional navigation system, a Navigation Antenna Signal Splitter is installed to distribute the navigation signal to both the Telematics Communication Interface Control Module and the navigation radio. The radio supplies 5 V through the coax cable to power the Navigation Antenna Signal Splitter.

Conditions for Running the DTC

- Radio On.
- System voltage is greater than 9 V and less than 16 V.
- The navigation system/telematics communication interface control module tests the GPS antenna every 10 s.

Conditions for Setting the DTC

B2462 02

The telematics communication interface control module detects a short to ground on the GPS antenna signal circuit.

B2462 04

The telematics communication interface control module detects a open/high resistance on the GPS antenna signal circuit.

Action Taken When the DTC Sets

- The telematics communication interface control module uses the last reported position and the vehicle speed signal to calculate the vehicle position.
- Route guidance may be inaccurate.
- Turn by turn navigation may be inaccurate or inoperative.

Conditions for Clearing the DTC

- The condition responsible for setting the DTC no longer exists.
- A history DTC will clear once 50 consecutive malifunction–free ignition cycles have occurred.

Diagnostic Aids

- The scan tool Telematics Communication Interface Control Module GPS signal parameter will display a Yes or No dependent upon whether or not the module sees an increment of the seconds transmitted by GPS signals to the Telematics Communication Interface Control Module. Upon entering this screen, the GPS signal title will initially display Yes, regardless of the presence of time increment, for at least 2 seconds, while the algorithm in the scan tool determines the status of the clock. If increment is found, Yes is continually displayed. If the clock remains static, No is displayed. The scan tool looks for increment every second, regardless of current display.
- Inaccurate or aged GPS position concerns which are no longer present may have been due to the temporary loss of GPS signal reception by the vehicle. Conditions such as tunnels or parking structures will restrict the cellular phone and navigation antenna from a clear view of the satellites in the sky and may have caused this temporary data loss.
- The GPS requires a clear line of sight to the sky to operate properly. In most cases the GPS will not have reception near tall buildings or inside structures.

Reference Information

Schematic Reference

- *OnStar/Telematics Schematics on page 8-6*
- *Radio/Navigation System Schematics on page 8-4*

Connector End View Reference

Component Connector End Views on page 11-455

Description and Operation

- *OnStar Description and Operation on page 8-63*
- *Radio/Audio System Description and Operation on page 8-69*

Electrical Information Reference

- *Circuit Testing on page 11-871*
- *Connector Repairs on page 11-895*
- *Testing for Intermittent Conditions and Poor Connections on page 11-877*
- *Wiring Repairs on page 11-883*

Scan Tool Reference

Control Module References on page 6-3 for scan tool information

Special Tools

EL-49903 OnStar Antenna Diagnostic Tool Kit

Circuit/System Verification

Note: The following verification requires the vehicle to be outside with an unobstructed view of the southern sky. Allow 5 minutes after turning the ignition ON for the vehicle to acquire the GPS satellites signal.

1. Ignition ON.
2. Verify that DTC B2462 is not set in the Telematics Communication Interface Control Module.

⇒ **If DTC B2462 is set in the Telematics Communication Interface Control Module and the vehicle is not equipped with a navigation system**

Refer to Circuit/System Testing Without Navigation System.

⇒ **If DTC B2462 is set in the Telematics Communication Interface Control Module and the vehicle is equipped with a navigation system**

Refer to Circuit/System Testing With Navigation System.

⇓ **If DTC B2462 is not set in the Telematics Communication Interface Control Module**

3. Verify an OnStar advisor can locate the vehicle after performing a blue button press.

⇒ **If the advisor can not locate the vehicle and the vehicle is not equipped with a navigation system**

Refer to Circuit/System Testing Without Navigation System

⇒ **If the advisor can not locate the vehicle and the vehicle is equipped with a navigation system**

Refer to Circuit/System Testing With Navigation System.

⇓ **If the advisor can locate the vehicle**

4. Verify DTC B2462 is not set in the radio.

⇒ **If DTC B2462 is set in the radio**

Refer to Circuit/System Testing With Navigation System – Step 9.

⇓ **If DTC B2462 is not set in the radio**

5. Verify that the NO GPS symbol/message is not displayed on the radio.

⇒ **If the NO GPS symbol/message is displayed**

Refer to Circuit/System Testing With Navigation System – Step 9.

⇓ **If the NO GPS symbol/message is not displayed**

6. All OK.

Circuit/System Testing

without Navigation System

Note: You must perform the Circuit/System Verification before proceeding with Circuit/System Testing.

1. Ignition OFF, disconnect the GPS and cellular coax cable connector at the K73 Telematics Communication Interface Control Module.
2. Attach the EL-49903–1 OnStar test antenna to the EL-49903–5 combiner. Using the EL-49903–6 brown –F coax cable attach the combiner to the K73 Telematics Communication Interface Control Module. Place the test antenna on the roof of the vehicle, ignition ON.
3. Verify DTC B2462 is not set or that the OnStar advisor can locate the vehicle.

⇒ **If DTC B2462 is set or the advisor can not locate the vehicle**

Replace the K73 Telematics Communication Interface Control Module.

⇓ **If DTC B2462 is not set or the advisor can locate the vehicle**

4. Test the coax cable between the K73 Telematics Communication Interface Control Module and the T4G Cellular Phone, Navigation, and Digital Radio Antenna. Refer to component testing.

⇒ **If the coax cable does not pass the test**

Replace the coax cable.

⇓ **If the coax cable passes the test**

5. Test or replace the T4G Cellular Phone, Navigation, and Digital Radio Antenna.

with Navigation System

Note: You must perform the Circuit/System Verification before proceeding with Circuit/System Testing.

1. Ignition OFF, disconnect the T4G Cellular Phone, Navigation, and Digital Radio Antenna coax cable at the T15 Navigation Antenna Signal Splitter.
2. Attach the EL-49903–1 OnStar test antenna to the EL-49903–5 combiner. Using the EL-49903–7 grey – G coax cable attach the combiner to the T15 Navigation Antenna Signal Splitter. Place the test antenna on the roof of the vehicle, ignition ON.

3. Verify DTC B2462 is not set or that the OnStar advisor can locate the vehicle.

⇒ **If DTC B2462 is not set or the advisor can locate the vehicle**

3.1. Test the coax cable between the T15 Navigation Antenna Signal Splitter and the T4G Cellular Phone, Navigation, and Digital Radio Antenna. Refer to Component Testing.

⇒ If the coax cable does not pass the test

Replace the coax cable.

⇓ If the coax cable passes the test

3.2. Replace the T4G cellular phone, navigation and digital radio antenna.

⇓ **If DTC B2462 is set or if the advisor can not locate the vehicle**

4. Ignition OFF, disconnect the GPS and cellular coax cable connector at the K73 Telematics Communication Interface Control Module.
5. Attach the EL-49903–1 OnStar test antenna to the EL-49903–5 combiner. Using the EL-49903–6 brown –F coax cable attach the combiner to the K73 Telematics Communication Interface Control Module. Place the test antenna on the roof of the vehicle, ignition ON.
6. Verify DTC B2462 is not set or that the OnStar advisor can locate the vehicle.

⇒ **If DTC B2462 is set or the advisor can not locate the vehicle.**

Replace the K73 Telematics Communication Interface Control Module.

⇓ **If DTC B2462 is not set or the advisor can locate the vehicle.**

7. Ignition OFF.
8. Test the coax cable between the T15 Navigation Antenna Signal Splitter and the K73 Telematics Communication Interface Control Module. Refer to Component Testing.

⇒ **If the coax cable does not pass the test.**

Replace the coax cable.

⇓ **If the coax cable passes the test.**

9. Ignition OFF, disconnect the GPS coax cable at the A11 Radio.
10. Attach the EL-49903–1 OnStar test antenna to the A11 Radio and place the test antenna on the roof of the vehicle.
11. Ignition ON.
12. Verify DTC B2462 is not set or that the NO GPS symbol/message is not displayed on the radio.

⇒ **If DTC B2462 is set or the NO GPS symbol/ message is displayed**

Replace the A11 Radio

⇓ **If DTC B2462 is not set or if the NO GPS symbol/message is not displayed.**

13. Ignition OFF.
14. Test the coax cable between the T15 Navigation Antenna Signal Splitter and the A11 Radio. Refer to Component Testing.

⇒ **If the coax cable does not pass the test.**

Replace the coax cable.

⇓ **If the coax cable passes the test.**

15. Test or replace the T15 Navigation Antenna Signal Splitter.

Component Testing

Caution: Refer to *Test Probe Caution on page 0-9*.

Note:

- Before testing the coax cable, check the cable exterior for being pinched, cut, damaged, or having loose connections at the components, which can cause reception issues.
- To prevent false reading when testing the center coax terminals, use care not to ground the test probe on the outer housing/shield.
- The vehicle may be equipped with sectioned coax. Test each section and replace only the faulty section, not the entire length of coax.

Coax Cable Test

1. Ignition OFF, disconnect the coax cable at both components.
2. Test for less than 5 Ω between the coax cable center terminal end to end.

⇒ **If 5 Ω or greater**

Replace the coax cable.

⇓ **If less than 5 Ω**

3. Test for greater than 5 Ω between the coax cable outer shield end to end.

⇒ **If 5 Ω or greater**

Replace the coax cable.

⇓ **If less than 5 Ω**

4. Test for infinite resistance between the coax cable center terminal and the coax cable outer shield.

⇒ **If less than infinite resistance**

Replace the coax cable.

⇓ **If infinite resistance**

5. All OK.

Repair Instructions

Perform the *Diagnostic Repair Verification on page 6-123* after completing the repair.

- *Radio Antenna Base Replacement on page 8-59*
- *Control Module References on page 6-3* for radio or telematics communication interface control module replacement, programming, and setup

OnStar Button LED Malfunction

Diagnostic Instructions

- Perform the *Diagnostic System Check - Vehicle on page 6-91* prior to using this diagnostic procedure.
- Review *Strategy Based Diagnosis on page 6-83* for an overview of the diagnostic approach.
- *Diagnostic Procedure Instructions on page 6-84* provides an overview of each diagnostic category.

DTC Descriptors

DTC B2476 04: Cellular Phone Select Service Switch Open

DTC B2476 59: Cellular Phone Select Service Switch Protection Time-out

DTC B2482 00: Cellular Phone Select Service Switch Range/Performance

Diagnostic Fault Information

Circuit	Short to Ground	Open/High Resistance	Short to Voltage	Signal Performance
10 V Reference	B2476 04	B2476 04	B2476 04	—
Control Terminal 6	1	1	2	—
Control Terminal 7	1	1	2	—
Signal Terminal 3	B2476 04	B2476 04	B2476 59	B2476 59, B2482 00
Ground	—	B2476 04	—	—
1. OnStar® LED Inoperative 2. LED Illuminated At All Times				

Circuit Description

The OnStar® status LEDs are located in the inside rearview mirror telematic button assembly. The green LED is illuminated when the system is ON and operating normally. When the green LED is green and flashing, it is an indication that a call is in progress. When the red LED is illuminated, a system malfunction is present. In the event there is a system malfunction and the OnStar® system is still able to make a call, the LED will flash red during the call. The OnStar® LEDs are controlled by the telematics communication interface control module via the keypad green LED control circuit and the keypad red LED control circuit.

Conditions for Running the DTC

- Ignition ON.
- Battery voltage must be between 9–16 V.

Conditions for Setting the DTC

B2476 04

The telematics communication interface control module detects a short to voltage or an open/high resistance on the keypad 10 V reference circuit.

B2482 and B2476 59

The telematics communication interface control module detects a valid signal on the keypad signal circuit for longer than 15 s. If one of the OnStar® buttons is held or stuck for 15 s or greater, the telematics communication interface control module will set this DTC.

Action Taken When the DTC Sets

- The OnStar® status LED turns red.
- No calls can be placed.
- The telematics communication interface control module will ignore all inputs from the OnStar® button assembly.

Conditions for Clearing the DTC

- The condition responsible for setting the DTC no longer exists.
- A history DTC will clear once 50 consecutive malfunction-free ignition cycles have occurred.

Reference Information

Schematic Reference

OnStar/Telematics Schematics on page 8-6

Connector End View Reference

Component Connector End Views on page 11-455

Description and Operation

OnStar Description and Operation on page 8-63

Electrical Information Reference

- *Circuit Testing on page 11-871*
- *Connector Repairs on page 11-895*
- *Testing for Intermittent Conditions and Poor Connections on page 11-877*
- *Wiring Repairs on page 11-883*

Scan Tool Reference

Control Module References on page 6-3 for scan tool information

Circuit/System Verification

Note: If the green LED is off with the ignition ON and the LED does not function when commanded with the scan tool, contact the OnStar Center to confirm the vehicle has a current subscription.

1. Ignition ON.
2. Verify no DTC are set.

⇒ **If any DTC are set**

Refer to *Diagnostic Trouble Code (DTC) List - Vehicle on page 6-92*

⇓ **If no DTC are set**

3. Verify that the green LED turns ON and OFF when commanding the Green Indicator ON and OFF with a scan tool.

⇒ **If the green LED does not turn ON and OFF**

Refer to Circuit/System Testing – Green LED Test

⇓ **If the green LED turns ON and OFF**

4. Verify that the red LED turns ON and OFF when commanding the Red Indicator ON and OFF with a scan tool.

⇒ **If the red LED does not turn ON and OFF**

Refer to Circuit/System Testing – Red LED Test

⇓ **If the red LED turns ON and OFF**

5. All OK.

Circuit/System Testing

Green LED Test

1. Ignition OFF, and all vehicle systems OFF, disconnect the harness connector at the A10 Inside Rearview Mirror. It may take up to 2 min for all vehicle systems to power down. Doors closed, courtesy lamps OFF.
2. Test for less than 10 Ω between the ground circuit terminal 5 and ground.

⇒ **If 10 Ω or greater**

2.1. Ignition OFF.

2.2. Test for less than 2 Ω in the ground circuit end to end.

⇒ If 2 Ω or greater, repair the open/high resistance in the circuit.

⇒ If less than 2 Ω, repair the open/high resistance in the ground connection.

⇓ **If less than 10 Ω**

3. Ignition ON.
4. Test for less than 1 V between the control circuit terminal 6 and ground while commanding the Green Indicator OFF with a scan tool.

⇒ **If 1 V or greater**

4.1. Ignition OFF, disconnect the X1 harness connector at the K73 Telematics Communication Interface Control Module, ignition ON.

4.2. Test for less than 1 V between the control circuit terminal 6 and ground.

⇒ If 1 V or greater, repair the short to voltage on the circuit.

⇒ If less than 1 V, replace the K73 Telematics Communication Interface Control Module.

⇓ **If less than 1 V**

5. Test for greater than 8 V between the control circuit terminal 6 and ground while commanding the Green Indicator ON with a scan tool.

⇒ **If 8 V or less**

5.1. Ignition OFF, disconnect the X1 harness connector at the K73 Telematics Communication Interface Control Module.

5.2. Test for infinite resistance between the control circuit terminal 6 and ground.

⇒ If less than infinite resistance, repair the short to ground on the circuit.

⇓ If infinite resistance

5.3. Test for less than 2 Ω in the control circuit end to end.

⇒ If 2 Ω or greater, repair the open/high resistance in the circuit.

⇒ If less than 2 Ω, replace the K73 Telematics Communication Interface Control Module.

⇓ **If greater than 8 V**

6. Test or replace the A10 Inside Rearview Mirror.

Red LED Test

1. Ignition OFF, and all vehicle systems OFF, disconnect the harness connector at the A10 Inside Rearview Mirror. It may take up to 2 min for all vehicle systems to power down. Doors closed, courtesy lamps OFF.
2. Test for less than 10 Ω between the ground circuit terminal 5 and ground.

⇒ **If 10 Ω or greater**

2.1. Ignition OFF.

2.2. Test for less than 2 Ω in the ground circuit end to end.

⇒ If 2 Ω or greater, repair the open/high resistance in the circuit.

⇒ If less than 2 Ω, repair the open/high resistance in the ground connection.

⇓ **If less than 10 Ω**

3. Ignition ON.

4. Test for less than 1 V between the control circuit terminal 7 and ground while commanding the Red Indicator OFF with a scan tool.

⇒ **If 1 V or greater**

4.1. Ignition OFF, disconnect the X1 harness connector at the K73 Telematics Communication Interface Control Module, ignition ON.

4.2. Test for less than 1 V between the control circuit terminal 7 and ground.

⇒ If 1 V or greater, repair the short to voltage on the circuit.

⇒ If less than 1 V, replace the K73 Telematics Communication Interface Control Module.

⇓ **If less than 1 V**

5. Test for greater than 8 V between the control circuit terminal 7 and ground while commanding the Red Indicator ON with a scan tool.

⇒ **If 8 V or less**

5.1. Ignition OFF, disconnect the X1 harness connector at the K73 Telematics Communication Interface Control Module.

5.2. Test for infinite resistance between the control circuit terminal 7 and ground.

⇒ If less than infinite resistance, repair the short to ground on the circuit.

⇓ If infinite resistance

5.3. Test for less than 2 Ω in the control circuit end to end.

⇒ If 2 Ω or greater, repair the open/high resistance in the circuit.

⇒ If less than 2 Ω, replace the K73 Telematics Communication Interface Control Module.

⇓ **If greater than 8 V**

6. Test or replace the A10 Inside Rearview Mirror.

Repair Instructions

Perform the *Diagnostic Repair Verification on page 6-123* after completing the repair.

- *Inside Rearview Mirror Replacement on page 4-215*
- *Control Module References on page 6-3* for telematics communication interface control module replacement, programming and setup.

OnStar Call Center Remote Function Requests Malfunction

Diagnostic Instructions

- Perform the *Diagnostic System Check - Vehicle on page 6-91* prior to using this diagnostic procedure.
- Review *Strategy Based Diagnosis on page 6-83* for an overview of the diagnostic approach.
- *Diagnostic Procedure Instructions on page 6-84* provides an overview of each diagnostic category.

Circuit/System Description

The telematics communication interface control module has the capability of commanding the horn, initiating door lock/unlock, or operating the exterior lamps using the serial data circuits. These functions are commanded by the OnStar® Call Center per a customer request.

Diagnostic Aids

The customer concern may have been due to a lack of cellular service in a given area, or a failure in the National Cellular Network infrastructure that has since been corrected.

Reference Information

Schematic Reference

OnStar/Telematics Schematics on page 8-6

Connector End View Reference

Component Connector End Views on page 11-455

Description and Operation

OnStar Description and Operation on page 8-63

Electrical Information Reference

- *Circuit Testing on page 11-871*
- *Connector Repairs on page 11-895*
- *Testing for Intermittent Conditions and Poor Connections on page 11-877*
- *Wiring Repairs on page 11-883*

Scan Tool Reference

Control Module References on page 6-3 for scan tool information

Circuit/System Verification

Note:

- It is necessary to inform the OnStar® Call Center advisor that this call is for vehicle diagnostic purposes.
- It is necessary to have the vehicle in an open outside area where a cellular call can be successfully placed and GPS data can be received from satellites.

1. Ignition ON.
2. Verify that the horn, lights, and the door locks on the vehicle operate properly.

⇒ **If an applicable vehicle system does not operate properly**

Refer to *Diagnostic System Check - Vehicle on page 6-91*.

⇓ **If all applicable vehicle systems operate properly**

3. Verify that a call can be successfully placed to the OnStar Call Center by pressing the blue OnStar button.

⇒ **If unable to contact the OnStar® call center**

Refer to *Unable to Contact OnStar Call Center on page 8-51*

⇓ **If able to contact the OnStar Call Center**

4. Verify with the OnStar advisor that all remote functions (door locks, lights, and horn) work.

⇒ **If the remote functions do not operate when requested**

Replace the K73 Telematics Communication Interface Control Module

⇓ **If the remote functions operate when requested**

5. All OK.

Repair Instructions

Perform the *Diagnostic Repair Verification on page 6-123* after completing the repair.

Control Module References on page 6-3 for telematics communication interface control module replacement, programming and setup.

OnStar Button Malfunction

Diagnostic Instructions

- Perform the *Diagnostic System Check - Vehicle on page 6-91* prior to using this diagnostic procedure.
- Review *Strategy Based Diagnosis on page 6-83* for an overview of the diagnostic approach.
- *Diagnostic Procedure Instructions on page 6-84* provides an overview of each diagnostic category.

DTC Descriptors

DTC B2476 04: Cellular Phone Select Service Switch Open

DTC B2476 59: Cellular Phone Select Service Switch Protection Time-out

DTC B2482 00: Cellular Phone Select Service Switch Range/Performance

Diagnostic Fault Information

Circuit	Short to Ground	Open/High Resistance	Short to Voltage	Signal Performance
10 V Reference	B2476 04	B2476 04	B2476 04	—
Signal Terminal 3	B2476 04	B2476 04	B2476 59	B2476 59, B2482 00
Ground	—	B2476 04	—	—

Circuit/System Description

The OnStar® button assembly consists of 3 buttons: Call/Answer, OnStar® Call Center, and OnStar® Emergency. The telematics communication interface control module supplies the OnStar® button assembly with 10 V via the 10 V reference circuit . Each of the buttons, when pressed, completes the circuit across a resistor allowing a specific voltage to be returned to the telematics communication interface control module over the keypad signal circuit. Depending upon the voltage range returned, the telematics communication interface control module is able to identify which button has been activated.

Conditions for Running the DTC

- Ignition ON.
- Battery voltage must be between 9–16 V.

Conditions for Setting the DTC

B2476 04

The telematics communication interface control module detects a short to voltage or an open/high resistance on the keypad 10 V reference circuit.

B2482 and B2476 59

The telematics communication interface control module detects a valid signal on the keypad signal circuit for longer than 15 s. If one of the OnStar® buttons is held or stuck for 15 s or greater, the telematics communication interface control module will set this DTC.

Action Taken When the DTC Sets

- The OnStar® status LED turns red.
- No calls can be placed.
- The telematics communication interface control module will ignore all inputs from the OnStar® button assembly.

Conditions for Clearing the DTC

- The condition responsible for setting the DTC no longer exists.
- A history DTC will clear once 50 consecutive malfunction-free ignition cycles have occurred.

Reference Information

Schematic Reference

OnStar/Telematics Schematics on page 8-6

Connector End View Reference

Component Connector End Views on page 11-455

Description and Operation

OnStar Description and Operation on page 8-63

Electrical Information Reference

- *Circuit Testing on page 11-871*
- *Connector Repairs on page 11-895*
- *Testing for Intermittent Conditions and Poor Connections on page 11-877*
- *Wiring Repairs on page 11-883*

Scan Tool Reference

Control Module References on page 6-3 for scan tool information

Circuit/System Verification

Note: Contact the OnStar® Call Center first before pressing the emergency button in order to notify them of the test.

1. Ignition ON.
2. Verify no DTCs are set.

⇒ **If any DTCs are set**

Diagnostic Trouble Code (DTC) List - Vehicle on page 6-92

⇓ **If no DTCs are set**

3. Verify that each button of the S51 Telematics Button Assembly operates normally by pressing each button individually.

⇒ **If none of the buttons operate normally**

Refer to Circuit/System Testing.

⇒ **If some, but not all, of the buttons operate normally**

Test or replace the A10 Inside Rearview Mirror.

⇓ **If all of the buttons operate normally**

4. All OK.

Circuit/System Testing

1. Ignition OFF and all vehicle systems OFF, disconnect the harness connector at the A10 Inside Rearview Mirror. It may take up to 2 min for all vehicle systems to power down.
2. Test for less than 10 Ω between the ground circuit terminal 5 and ground.

⇒ **If 10 Ω or greater**

2.1. Ignition OFF.

2.2. Test for less than 2 Ω in the ground circuit end to end.

⇒ If 2 Ω or greater, repair the open/high resistance in the circuit.

⇒ If less than 2 Ω, repair the open/high resistance in the ground connection.

⇓ **If less than 10 Ω**

3. Ignition ON.
4. Test for 8.0–10.5 V between the 10 V reference circuit terminal 4 and ground.

⇒ **If less than 8.0 V**

4.1. Ignition OFF, disconnect the harness connector at the K73 Telematics Communication Interface Control Module.

4.2. Test for infinite resistance between the 10 V reference circuit and ground.

⇒ If less than infinite resistance, repair the short to ground on the circuit.

⇓ If infinite resistance

4.3. Test for less than 2 Ω in the 10 V reference circuit end to end.

⇒ If 2 Ω or greater, repair the open/high resistance in the circuit.

⇒ If less than 2 Ω, replace the K73 Telematics Communication Interface Control Module.

⇒ **If greater than 10.5 V**

4.1. Ignition OFF, disconnect the harness connector at the K73 Telematics Communication Interface Control Module, ignition ON.

4.2. Test for less than 1 V between the 10 V reference circuit and ground.

⇒ If 1 V or greater, repair the short to voltage on the circuit.

⇒ If less than 1 V, replace the K73 Telematics Communication Interface Control Module.

⇓ **If between 8.0–10.5 V**

5. Ignition OFF.
6. Test for 500–900 Ω between the signal circuit terminal 3 and ground.

⇒ **If less than 500 Ω**

6.1. Disconnect the X1 harness connector at the K73 Telematics Communication Interface Control Module.

6.2. Test for infinite resistance between the signal circuit and ground.

⇒ If less than infinite resistance, repair the short to ground on the circuit.

⇒ If infinite resistance, replace the K73 Telematics Communication Interface Control Module.

⇒ **If greater than 900 Ω**

6.1. Disconnect the X1 harness connector at the K73 Telematics Communication Interface Control Module, ignition ON.

6.2. Test for less than 1 V between the signal circuit and ground.

⇒ If 1 V or greater, repair the short to voltage on the circuit.

⇓ If less than 1 V

6.3. Ignition OFF.

6.4. Test for less than 2 Ω in the signal circuit end to end.

⇒ If 2 Ω or greater, repair the open/high resistance in the circuit.

⇒ If less than 2 Ω, replace the K73 Telematics Communication Interface Control Module.

⇓ **If between 500–900 Ω**

7. Test or replace the A10 Inside Rearview Mirror.

Repair Instructions

Perform the *Diagnostic Repair Verification on page 6-123* after completing the repair.

- *Inside Rearview Mirror Replacement on page 4-215*
- *Control Module References on page 6-3* for telematics communication interface control module replacement, programming and setup.

OnStar Steering Wheel Control Functions Malfunction

Some vehicles equipped with the OnStar® system have the capability of accessing voice mailboxes and other automated phone systems by means of the steering wheel controls, while the OnStar® Personal Calling feature is in use. If the "Talk" or "Mute" button (depending upon the vehicle) on the steering wheel controls is depressed during an OnStar® Personal Calling call, the telematics communication interface control module receives the message on the serial data bus from either the radio or body control module. This message is interpreted as a request to turn any spoken numbers into dual tone multi-frequency tones to be delivered over the airwaves to the phone system the user is communicating with. Complete instructions for operation of these features can be found in the information provided to the customer with the OnStar® system.

The steering wheel controls are a resistor network that consist of multiple momentary contact switches and a series of resistors. The switches and resistor network are arranged so that each switch has a different resistance value. When a switch is pressed, a voltage drop occurs in the resistor network, which produces a specific voltage value unique to the switch selected, to be interpreted by either the radio or BCM. In the event the OnStar® steering wheel control functions are inoperative, technicians should refer to *Steering Wheel Controls Malfunction on page 8-110*, to begin diagnosis of the steering wheel control concern.

Radio Poor Reception

Diagnostic Instructions

- Perform the *Diagnostic System Check - Vehicle on page 6-91* prior to using this diagnostic procedure.
- Review *Strategy Based Diagnosis on page 6-83* for an overview of the diagnostic approach.
- *Diagnostic Procedure Instructions on page 6-84* provides an overview of each diagnostic category.

DTC Descriptors

DTC B125A 02: Antenna Signal Circuit Short to Ground

DTC B125A 04: Antenna Signal Circuit Open Circuit

Diagnostic Fault Information

Circuit	Short to Ground	Open/High Resistance	Short to Voltage	Signal Performance
Radio Antenna Coax	B125A 02	B125A 04	1	—
Antenna Ground	—	1	—	—
1. May exhibit possible AM/FM interference.				

Circuit/System Description

The AM/FM antenna is part of the multi-band antenna is located on the roof of the vehicle. The radio provides battery voltage to the AM/FM amplifier in the antenna base using the center conductor of the antenna coaxial cable. When a 12 V signal is seen by the amplifier, both AM and FM signals are amplified.

Conditions for Running the DTC

- Vehicle in Service Mode.
- Battery voltage must be between 9–16 V.

Conditions for Setting the DTC

B125A 02

The radio detects a short to ground in the antenna signal circuit center conductor.

B125A 04

The radio detects an open in the antenna signal circuit center conductor.

Action Taken When the DTC Sets

Radio reception may be poor or not available.

Conditions for Clearing the DTC

- The condition responsible for setting the DTC no longer exists.
- A history DTC will clears after 50 consecutive malfunction-free ignition cycles have occurred.

Diagnostic Aids

Poor AM and FM radio reception may be due to multiple influences, some of which may not be vehicle related. Areas which have high RF traffic or block the signal path may cause a degradation in radio reception. Radio reception may also be influenced by items within the vehicle, but not part of the radio system. Such examples are aftermarket electrical accessories or other items which may generate noise in the vehicle electrical system. Aftermarket window tinting, especially when there is a metallic in the film, may reduce radio reception.

AM reception is highly dependent on the antenna amplifier receiving battery voltage from the radio and being properly grounded. The antenna base has a built in antenna amplifier that boosts both AM and FM reception. When the antenna amplifier does not receive power, AM stations may not be received and FM reception will be limited. If the antenna base is not properly grounded, excessive interference in the signal may occur, or reception may be limited.

Reference Information

Schematic Reference

Radio/Navigation System Schematics on page 8-4

Connector End View Reference

Component Connector End Views on page 11-455

Description and Operation

Radio/Audio System Description and Operation on page 8-69

Electrical Information Reference

- *Circuit Testing on page 11-871*
- *Connector Repairs on page 11-895*
- *Testing for Intermittent Conditions and Poor Connections on page 11-877*
- *Wiring Repairs on page 11-883*

Scan Tool Reference

Control Module References on page 6-3 for scan tool information

Circuit/System Verification

1. Vehicle in Service Mode, A11 Radio ON.
2. Verify station reception is normal when tuned to several known good AM and FM stations.

⇒ **If AM or FM reception is poor.**

Refer to Circuit/System Testing

⇓ **If reception is normal**

3. All OK.

Circuit/System Testing

1. Vehicle OFF, disconnect the radio antenna coax cable from the A11 Radio and from the T4G Cellular Phone, Navigation, and Digital Radio Antenna.
2. Verify the antenna coax cable passes the coax cable component test. Refer to Component Testing.

⇒ **If the coax cable does not pass the test**

Replace the antenna coax cable

⇓ **If the coax cable passes the test**

3. Connect the antenna coax cable to the A11 Radio. Vehicle in Service Mode, A11 Radio ON.
4. Verify a test lamp illuminates between the antenna coax cable center terminal and ground at the T4G Cellular Phone, Navigation, and Digital Radio Antenna.

⇒ **If the test lamp does not illuminate**

Replace the A11 Radio.

⇓ **If the test lamp illuminates**

5. Test or replace the T4G Cellular Phone, Navigation, and Digital Radio Antenna.

Component Testing

Caution: Refer to *Test Probe Caution on page 0-9*.

Note: Before testing the coax cable, check the cable exterior for being pinched, cut, damaged, or having loose connections at the components, which can cause reception issues.

To prevent false reading when testing the center coax terminals, use care not to ground the test probe on the outer housing/shield.

Coax Cable Test

1. Vehicle OFF, disconnect the coax cable at both components.
2. Test for less than 5 Ω between coax cable center terminal end to end.

⇒ **If 5 Ω or greater**

Replace the coax cable

⇓ **If less than 5 Ω**

3. Test for less than 5 Ω between the coax cable outer shield end to end.

⇒ **If 5 Ω or greater**

Replace the coax cable

⇓ **If less than 5 Ω**

4. Test for infinite resistance between the coax cable center terminal and the coax cable outer shield.

⇒ **If less than infinite resistance**

Replace the coax cable

⇓ **If infinite resistance**

5. All OK

Repair Instructions

Perform the *Diagnostic Repair Verification on page 6-123* after completing the repair.

- *Radio Antenna Base Replacement on page 8-59*
- *Control Module References on page 6-3* for radio replacement, programming, and setup.

Speaker Replacement Reference

Component	Repair Instruction
Front Door Speaker	*Radio Front Speaker Replacement on page 8-61*
Rear Door Speaker	*Radio Rear Speaker Replacement on page 8-62*

Speaker Malfunction

Diagnostic Instructions

- Perform the *Diagnostic System Check - Vehicle on page 6-91* prior to using this diagnostic procedure.
- Review *Strategy Based Diagnosis on page 6-83* for an overview of the diagnostic approach.
- *Diagnostic Procedure Instructions on page 6-84* provides an overview of each diagnostic category.

Diagnostic Fault Information

Circuit	Short to Ground	Open/High Resistance	Short to Voltage	Signal Performance
Left Front Speaker Output (+) Signal	B1025 02, 1	B1025 04, 1	B1025 01, 1, 2	—
Left Front Speaker Output (-) Signal	B1025 02, 1	B1025 04, 1	B1025 01, 1, 2	—
Right Front Speaker Output (+) Signal	B1035 02, 1	B1035 04, 1	B1035 01, 1, 2	—
Right Front Speaker Output (-) Signal	B1035 02, 1	B1035 04, 1	B1035 01, 1, 2	—
Left Rear Speaker Output (+) Signal	B1045 02, 1	B1045 04, 1	B1045 01, 1, 2	—
Left Rear Speaker Output (-) Signal	B1045 02, 1	B1045 04, 1	B1045 01, 1, 2	—
Right Rear Speaker Output (+) Signal	B1055 02, 1	B1055 04, 1	B1055 01, 1, 2	—
Right Rear Speaker Output (-) Signal	B1055 02, 1	B1055 04, 1	B1055 01, 1, 2	—

1. No or reduced audio from speaker(s) on the affected audio circuit.
2. Noticeable audio distortion may be present.

Circuit/System Description

Each of the audio output channel circuits (+) and (−), at the radio have a DC bias voltage that is approximately one half of battery voltage. When using a DMM, each of the audio output channel circuits will measure approximately 6.5 V DC. The audio being played on the system is produced by a varying AC voltage that is centered around the DC bias voltage on the same circuit. The AC voltage is what causes the speaker cone to move and produce sound. The frequency (Hz) of the AC voltage signal is directly related to the frequency of the input (audio source playing) to the audio system. Both the DC bias voltage and the AC voltage signals are needed for the audio system to properly produce sound.

If equipped with the UW6 option (6 speaker system) the front speaker assemblies are a coaxial dual speaker design. Diagnostics are the same as a single speaker, as internal circuits connect two speakers into one assembly. Internal parts are not serviced separately, it is replaced as an assembly.

Diagnostic Aids

- Improper speaker mounting or loose trim may cause an audible buzz or distortion. Inspect the appropriate speaker and the surrounding interior trim for proper and secure mounting.
- The EL-50334-6 Audio System Diagnostic CD contains audio tracks that can be used to duplicate and isolate such concerns. Tracks 11 and 12 contain audio sweep tones for testing for speaker and grill rattles.

- The test tones on the CD may be copied to a USB drive or other device to use during testing.
- If the speaker or surrounding interior trim is found to be loose or improperly secured, correctly secure the item.

Reference Information

Schematic Reference

Radio/Navigation System Schematics on page 8-4

Connector End View Reference

Component Connector End Views on page 11-455

Description and Operation

Radio/Audio System Description and Operation on page 8-69

Electrical Information Reference

- *Circuit Testing on page 11-871*
- *Connector Repairs on page 11-895*
- *Testing for Intermittent Conditions and Poor Connections on page 11-877*
- *Wiring Repairs on page 11-883*

Scan Tool Reference

Control Module References on page 6-3 for scan tool information

Special Tools

EL-50334-50 USB Cable and Adapter Kit

Circuit/System Verification

1. Vehicle in Service Mode, A11 Radio ON, mute OFF.
2. Verify clear audio is heard from each speaker, adjusting fade and balance controls to test each speaker individually.

⇒ **If audio is inoperative from one or more speakers, or the audio emitted is not clear**

Refer to Circuit/System Testing.

⇓ **If clear audio is heard from all speakers**

3. All OK.

Circuit/System Testing

1. Vehicle OFF, disconnect the harness connector at the appropriate P19 Speaker. Vehicle in Service Mode, radio ON, mute OFF.
2. Test for 5–7 V between each audio signal circuit terminal 1 and terminal 2 and ground.

⇒ **If less than 5 V**

2.1. Vehicle OFF, disconnect the X1 harness connector at the A11 Radio.

2.2. Test for infinite resistance between the signal circuit and ground.

⇒ If less than infinite resistance, repair the short to ground on the circuit.

⇓ If infinite resistance

2.3. Test for less than 2 Ω in the signal circuit end to end.

⇒ If 2 Ω or greater, repair the open/high resistance in the circuit.

⇒ If less than 2 Ω, replace the A11 Radio.

⇒ **If greater than 7 V**

2.1. Vehicle OFF, disconnect the X1 harness connector at the A11 Radio. Vehicle in Service Mode.

2.2. Test for less than 1 V between the signal circuit and ground.

⇒ If 1 V or greater, repair the short to voltage on the circuit.

⇒ If less than 1 V, replace the A11 Radio.

⇓ **If between 5–7 V**

Note: In the following tests, audio signal frequencies (Hz) will be tested. To prevent misdiagnosis, the door chime must be OFF during testing. Ensure the driver door latch is closed during testing.

3. Insert the EL-50334-6 Audio Test CD from the *EL-50334-50* USB cable and adapter kit. Play track number three (50 Hz bass test tone) from the test CD.
4. Test for 49–51 Hz AC between each signal circuit terminal 1 and terminal 2 and ground.

⇒ **If not between 49–51 Hz AC**

Replace the A11 Radio.

⇓ **If between 49–51 Hz AC**

5. Test or replace the P19 Speaker.

Repair Instructions

Perform the *Diagnostic Repair Verification on page 6-123* after completing the repair.

- *Speaker Replacement Reference on page 8-49*
- *Control Module References on page 6-3* for radio replacement, programming, and setup

Unable to Contact OnStar Call Center

Diagnostic Instructions

- Perform the *Diagnostic System Check - Vehicle on page 6-91* prior to using this diagnostic procedure.
- Review *Strategy Based Diagnosis on page 6-83* for an overview of the diagnostic approach.
- *Diagnostic Procedure Instructions on page 6-84* provides an overview of each diagnostic category.

Circuit/System Description

The telematics communication interface control module is a cellular device that allows the user to communicate data and voice signals over the national cellular network. When an OnStar keypress is made, the telematics communication interface control module activates and connects the system to the cellular carriers communication system by interacting with the national cellular infrastructure. The module sends and receives all cellular communications over the cellular phone and navigation antenna and cellular antenna coax.

Diagnostic Aids

- The customer concern may have been due to a lack of cellular service in a given area. A failure in the National Cellular Network infrastructure at the time of the customers failed connection that has since been repaired may also have been the cause.
- If an OnStar® emergency call is able to successfully connect the vehicle to the OnStar® Call Center when an OnStar® Call Center button press is not, there may be a failure in the ability of the OnStar® system in the vehicle to be recognized by the local cellular carrier.
- If the prompt "OnStar® request ended" is heard, without pressing the white dot button at the end of the OnStar® keypress, the OnStar® system at one time has made a successful cellular connection, but was unable to complete the call.
- It is important to have the vehicle in an open outside area where a cellular call can be successfully placed and GPS data can be received from satellites.

Reference Information

Schematic Reference

OnStar/Telematics Schematics on page 8-6

Connector End View Reference

Component Connector End Views on page 11-455

Description and Operation

OnStar Description and Operation on page 8-63

Electrical Information Reference

- *Circuit Testing on page 11-871*
- *Connector Repairs on page 11-895*
- *Testing for Intermittent Conditions and Poor Connections on page 11-877*
- *Wiring Repairs on page 11-883*

Scan Tool Reference

Control Module References on page 6-3 for scan tool information

Special Tools

EL-49903 GM OnStar Antenna Diagnostic Tool Kit

Circuit/System Verification

Note: The following verification requires the vehicle to be outside with an unobstructed view of the southern sky. Allow 5 minutes after turning the ignition ON for the GPS satellites to acquire vehicle signal.

1. Vehicle in Service Mode.
2. Verify that DTC B2470 is not set.

⇒ **If DTC B2470 is set**

Refer to *DTC B2470 on page 8-24*

⇓ **If DTC B2470 is not set**

3. Verify that a call can be successfully placed to the OnStar Call Center by pressing the blue OnStar button.

⇒ **If unable to connect with the OnStar Call Center.**

Refer to Circuit/System Testing

⇓ **If able to connect with the OnStar Call Center**

4. All OK.

Circuit/System Testing

Note:

- The vehicle may be equipped with sectioned coax. Test each section and replace only the faulty section, not the entire length of coax.
- The following verification requires the vehicle to be outside with an unobstructed view of the southern sky. Allow 5 min after turning the Vehicle in Service Mode for the GPS satellites to acquire vehicle signal.

1. Vehicle OFF and all vehicle systems OFF, disconnect the GPS and cellular coax cable connector at the K73 telematics communications interface control module.
2. Using the EL-49903–3 kit (EL-49903–5 adapter and EL-49903–4 coax cable), connect the *EL-49903* GM OnStar antenna diagnostic tool kit to the K73 Telematics Communication Interface Control Module. Place the test antenna on the roof of the vehicle.
3. Vehicle in Service Mode.
4. Verify the DTC does not set while operating the vehicle within the conditions for running the DTC.

⇒ **If the DTC sets**

Replace the K73 telematics communications interface control module.

⇓ **If the DTC does not set**

5. Vehicle OFF, Disconnect the *EL-49903* GM OnStar antenna diagnostic tool kit from the K73 Telematics Communication Interface Control Module.
6. Connect the coax cable to the K73 Telematics Communication Interface Control Module.
7. Vehicle in Service Mode.
8. Test for 4.5–5.5 V between the coax cable center conductor and the outer shield.

⇒ **If less than 4.5 V**

8.1. Vehicle OFF.

8.2. Test the coax cable. Refer to Component Testing.

⇒ If the coax cable does not pass the test, replace the coax cable.

⇒ If the coax cable passes the test, test or replace the K73 Telematics Communications Interface Control Module.

⇒ **If greater than 5.5 V**

9. Test or replace the T4G Cellular Phone, Navigation, and Digital Radio Antenna.

Component Testing

Caution: Refer to *Test Probe Caution on page 0-9*

Note: Before testing the coax cable, check the cable exterior for being pinched, cut, damaged, or having loose connections at the components, which can cause reception issues.

To prevent false readings when testing the center coax terminals, use care not to ground the test probe on the outer housing/shield.

Coax Cable Test

1. Vehicle OFF, disconnect the coax cable at both components.
2. Test for less than 5 Ω between the coax cable center terminal end to end.

⇒ **If 5 Ω or greater**

Replace the coax cable.

⇓ **If less than 5 Ω**

3. Test for greater than 5 Ω between the coax cable outer shield end to end.

⇒ **If 5 Ω or greater**

Replace the coax cable.

⇓ **If less than 5 Ω**

4. Test for infinite resistance between the coax cable center terminal and the coax cable outer shield.

⇒ **If less than infinite resistance**

Replace the coax cable.

⇓ **If infinite resistance**

5. All OK.

Repair Instructions

Perform the *Diagnostic Repair Verification on page 6-123* after completing the repair procedure.

- *Radio Antenna Base Replacement on page 8-59*
- *Control Module References on page 6-3* for telematics communication interface control module replacement, programming and setup

OnStar Voice Recognition Malfunction

Diagnostic Instructions

- Perform the *Diagnostic System Check - Vehicle on page 6-91* prior to using this diagnostic procedure.
- Review *Strategy Based Diagnosis on page 6-83* for an overview of the diagnostic approach.
- *Diagnostic Procedure Instructions on page 6-84* provides an overview of each diagnostic category.

Circuit/System Description

The telematics communication interface control module is capable of interpreting voice commands received over the cellular microphone circuit. Speech recognition allows the user to speak to one computer in the vehicle, and one reached over the cellular communication network. The module attempts to understand the users command, and responds by speaking back, or by taking the appropriate action, e.g. dialing the phone.

Reference Information

Schematic Reference

OnStar/Telematics Schematics on page 8-6

Connector End View Reference

Component Connector End Views on page 11-455

Description and Operation

OnStar Description and Operation on page 8-63

Electrical Information Reference

- *Circuit Testing on page 11-871*
- *Connector Repairs on page 11-895*
- *Testing for Intermittent Conditions and Poor Connections on page 11-877*
- *Wiring Repairs on page 11-883*

Circuit/System Verification

Note:

- It is necessary to have the vehicle in an open outside area where a cellular call can be successfully placed and GPS data can be received from satellites.
- The vehicle should be located in a quiet area.

1. Ignition ON, press the blue OnStar Call button.
2. Verify that your voice is heard clearly by the OnStar Call center.

⇒ **If your voice can not be heard clearly**

Refer to *OnStar Microphone Malfunction on page 8-36*

⇓ **If your voice can be heard clearly**

3. Verify that the system responds appropriately to all voice commands by pressing the voice command button and attempting to operate the system using multiple voice commands.

⇒ **If the OnStar system does not respond to any voice commands**

Replace the K73 Telematics Communication Interface Control Module

⇒ **If the OnStar system responds to some, but not all voice commands**

Refer to *OnStar Description and Operation on page 8-63* for tips on proper pronunciation

⇓ **If the OnStar system responds to all voice commands**

4. All OK.

Repair Instructions

Perform the *Diagnostic Repair Verification on page 6-123* after completing the repair procedure.

Control Module References on page 6-3 for telematics communication interface control module replacement, programming, and setup.

Repair Instructions

Mobile Telephone Microphone Replacement

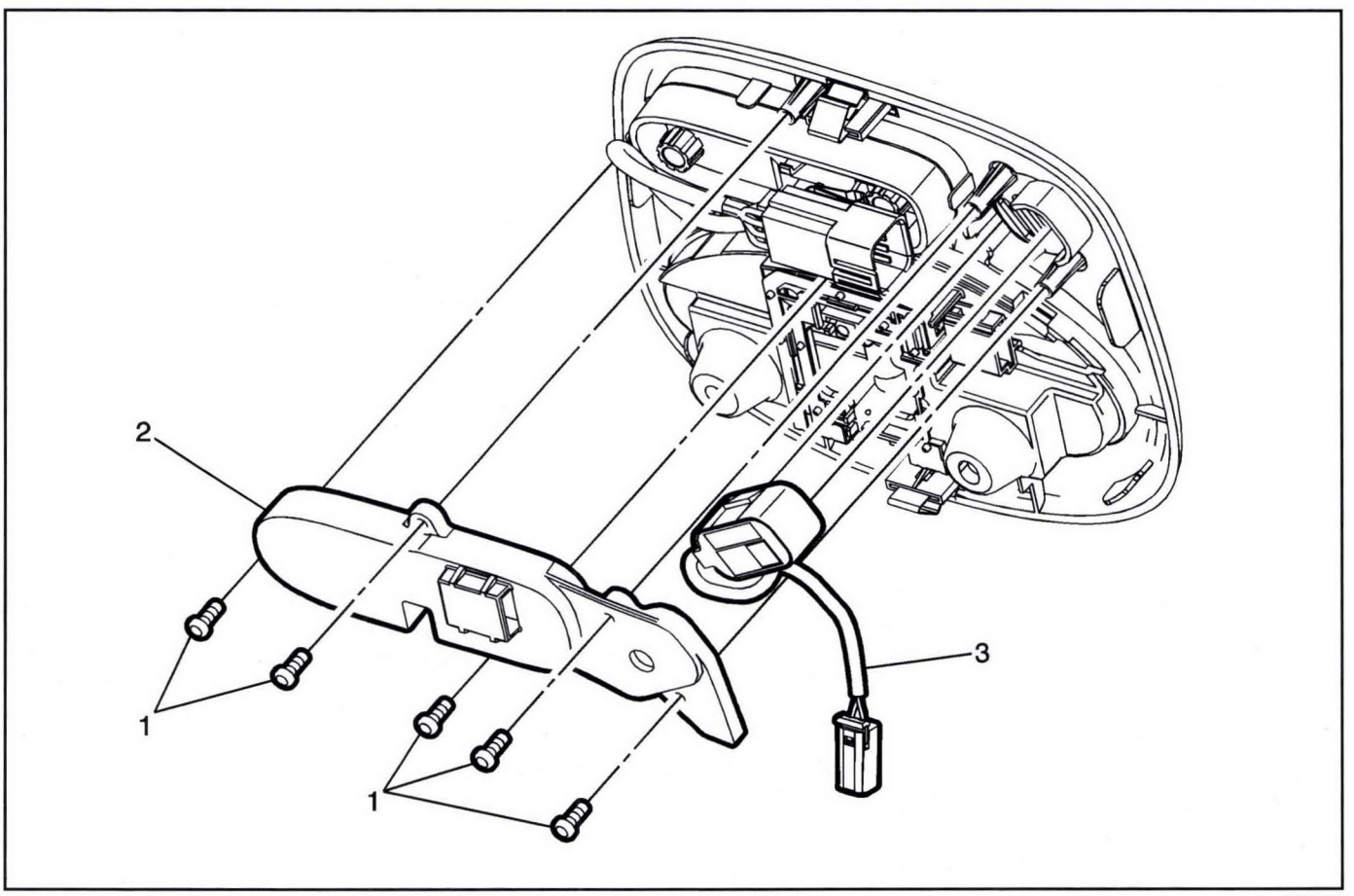

3212597

Mobile Telephone Microphone Replacement

Callout	Component Name
Preliminary Procedure Remove the center courtesy lamp. Refer to *Center Courtesy Lamp Replacement (North America) on page 4-174* or *Center Courtesy Lamp Replacement (Europe, Korea) on page 4-175*.	
1	Dome Lamp Housing Fasteners (Qty: 5) **Caution:** Refer to *Fastener Caution on page 0-8*.
2	Dome Lamp Housing
3	Mobile Telephone Microphone

Communication Center Call Switch Replacement

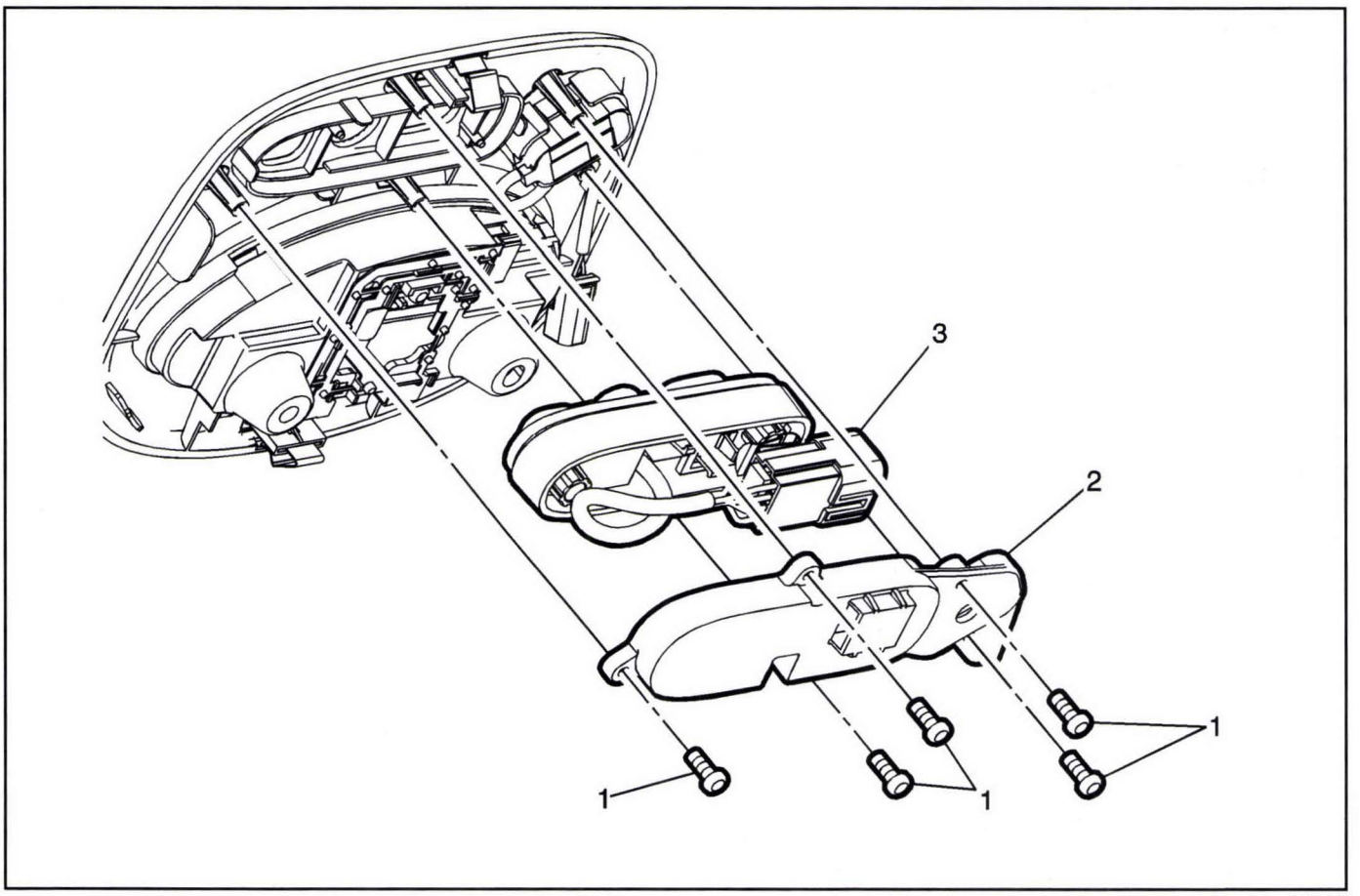

3212595

Communication Center Call Switch Replacement

Callout	Component Name
Preliminary Procedure Remove the center courtesy lamp. Refer to *Center Courtesy Lamp Replacement (North America) on page 4-174* or *Center Courtesy Lamp Replacement (Europe, Korea) on page 4-175*.	
1	Dome Lamp Housing Fasteners (Qty: 5) **Caution:** Refer to *Fastener Caution on page 0-8*.
2	Dome Lamp Housing
3	Communication Center Call Switch

Communication Interface Module Replacement

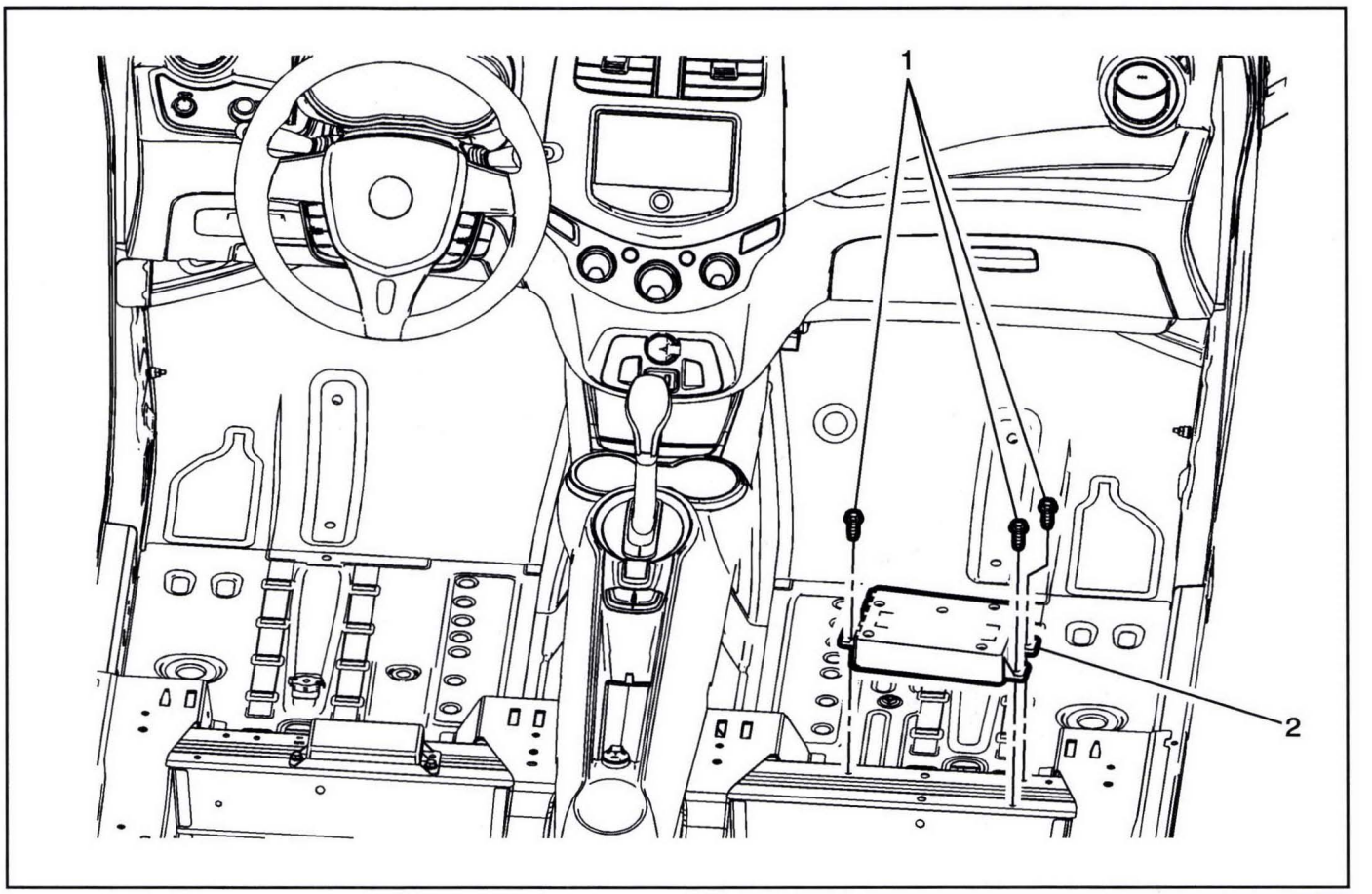

3212642

Communication Interface Module Replacement

Callout	Component Name
Warning: Refer to Battery Disconnect Warning on page 0-4.	
Preliminary Procedures 1. Disconnect the battery negative cable. 2. Remove passenger front seat. Refer to *Driver or Passenger Seat Removal and Installation on page 13-3.*	
1	Communication Interface Module Fastener (Qty: 3) **Caution:** Refer to *Fastener Caution on page 0-8.* **Tighten** 5.5 N•m (49 lb in)
2	Communication Interface Module **Procedure** Disconnect the electrical connector.

Communication Interface Module Battery Replacement

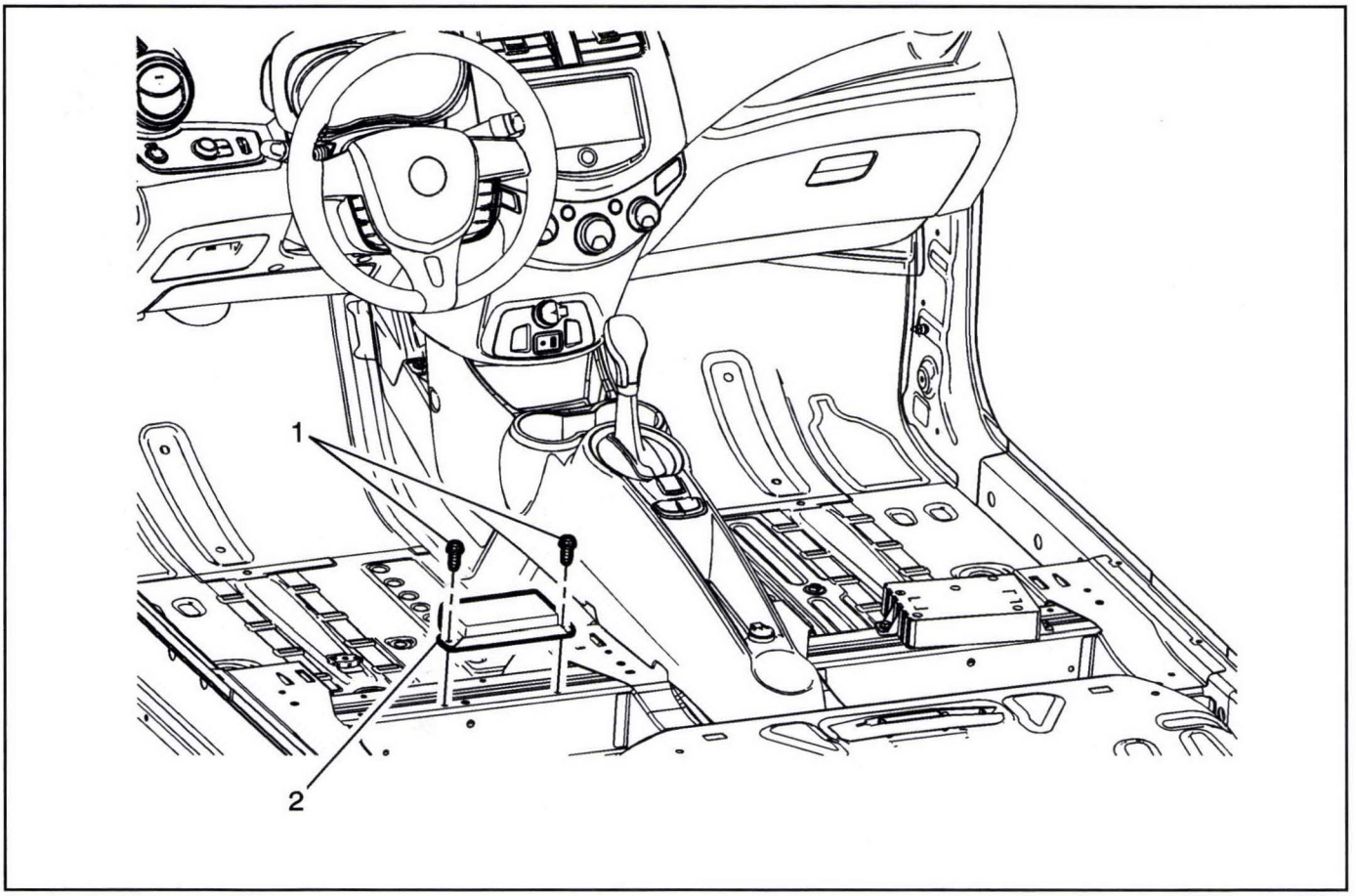

3212640

Communication Interface Module Battery Replacement

Callout	Component Name
	Warning: Refer to Battery Disconnect Warning on page 0-4. **Preliminary Procedures** 1. Disconnect the battery negative cable. 2. Remove driver front seat. Refer to *Driver or Passenger Seat Removal and Installation on page 13-3*.
1	Communication Interface Module Battery Fastener (Qty: 2) **Caution:** Refer to *Fastener Caution on page 0-8*. **Tighten** 5.5 N•m (49 lb in)
2	Communication Interface Module Battery **Procedure** Disconnect the electrical connector.

Radio Replacement

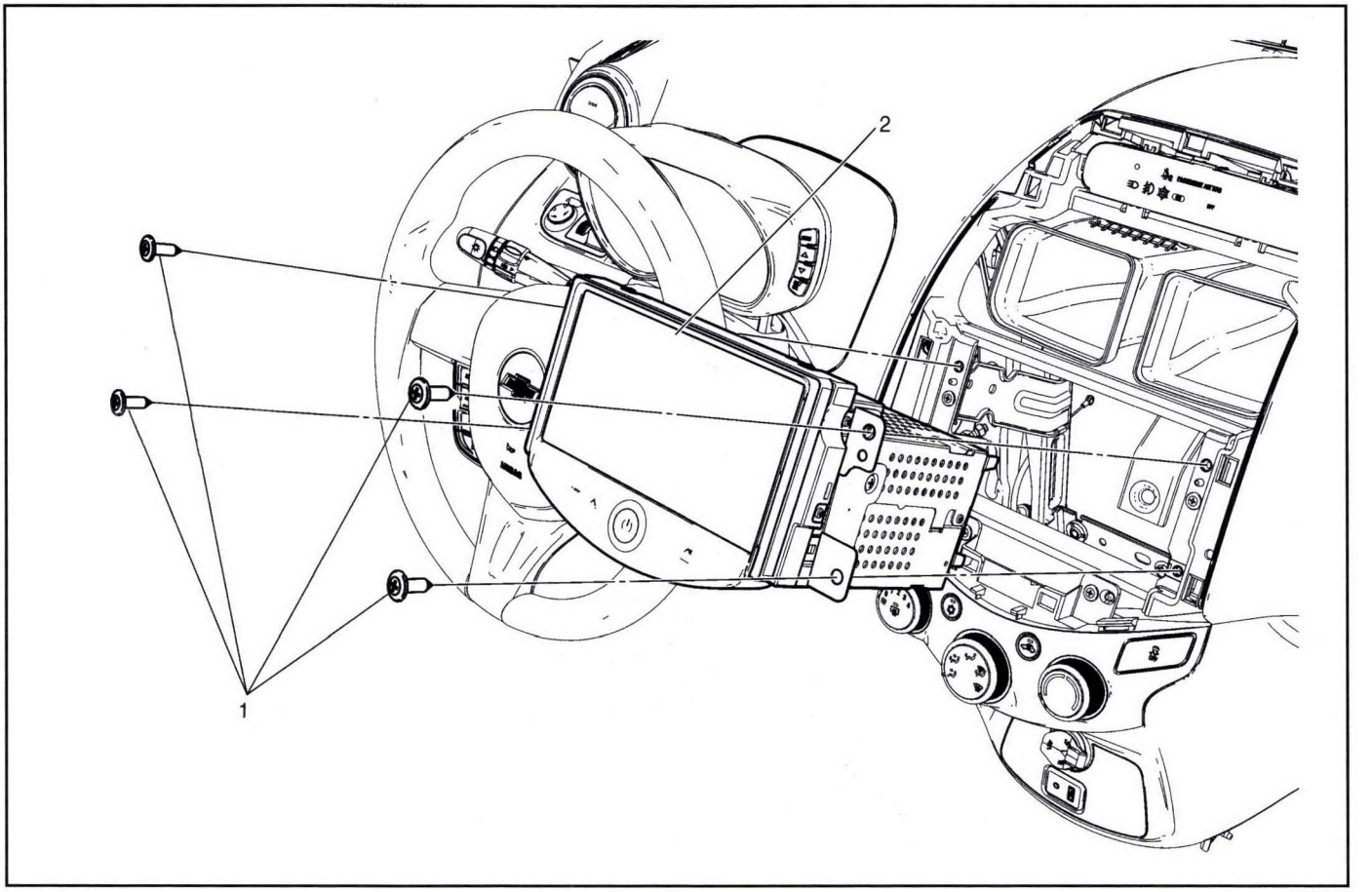

2754773

Radio Replacement

Callout	Component Name
Preliminary Procedure Remove the instrument panel center trim plate applique. Refer to *Instrument Panel Center Trim Plate Applique Replacement on page 2-25*.	
1	Radio Fasteners (Qty: 4) **Caution:** Refer to *Fastener Caution on page 0-8*.
2	Radio **Procedure** 1. Disconnect the electrical connections. 2. For programming and set up information, refer to *Control Module References on page 6-3*.

Multimedia Receptacle Replacement

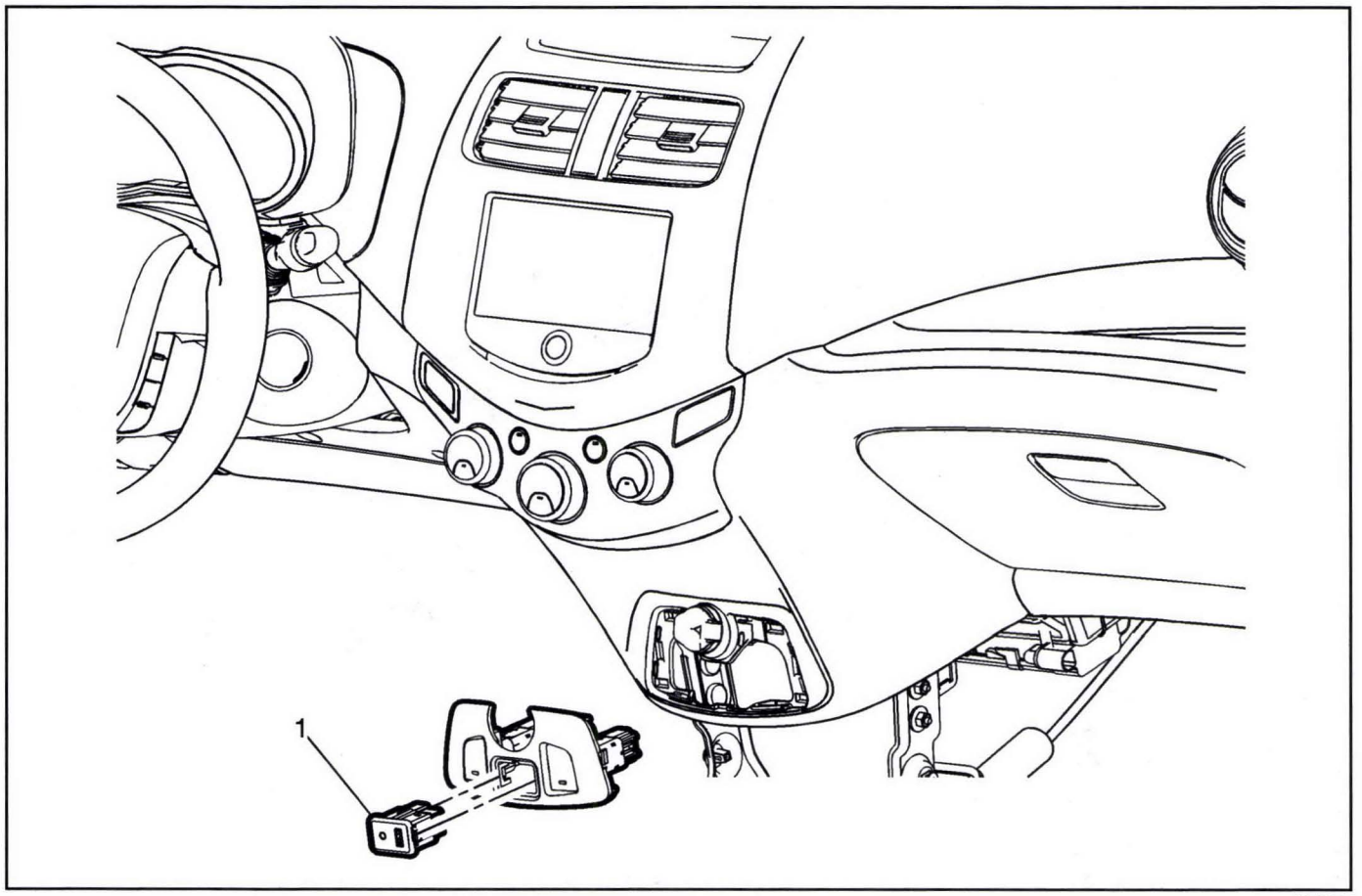

3212601

Multimedia Receptacle Replacement

Callout	Component Name
Preliminary Procedure Remove the front seat heater switch bezel. Refer to *Front Seat Heater Switch Bezel Replacement on page 2-42*.	
1	Multimedia Receptacle **Procedures** 1. Use a flat-bladed tool to release the switch from the mount plate. 2. Disconnect the electrical connector from the switch assembly.

Radio Antenna Base Replacement

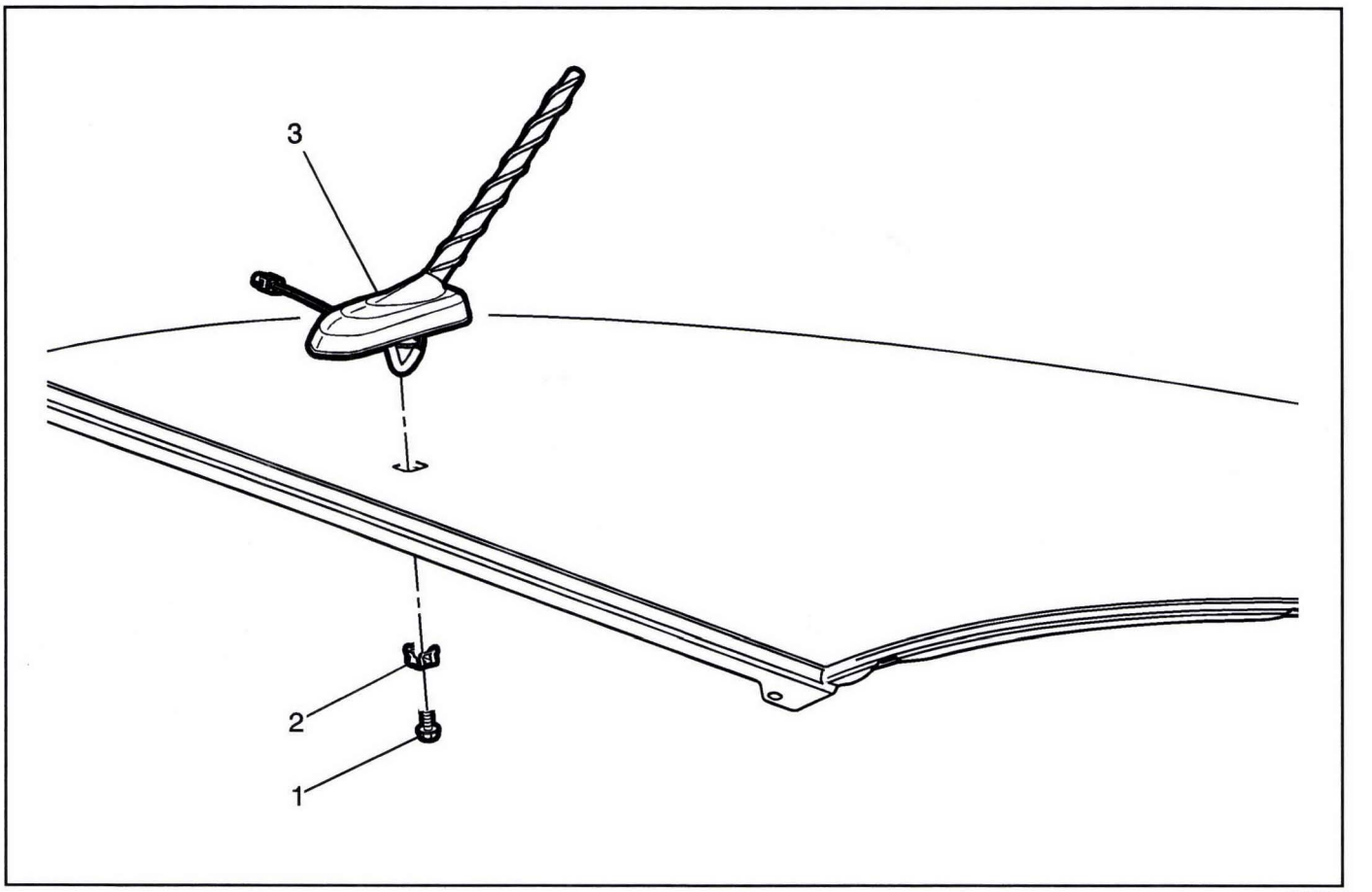

3212600

Radio Antenna Base Replacement

Callout	Component Name
Preliminary Procedures Remove the center courtesy lamp. Refer to *Center Courtesy Lamp Replacement (North America) on page 4-174* or *Center Courtesy Lamp Replacement (Europe, Korea) on page 4-175*.	
1	Radio Antenna Base Fastener **Caution:** Refer to *Fastener Caution on page 0-8*. **Tighten** 9 N•m (80 lb in)
2	Radio Antenna Base Retainer
3	Radio Antenna Base **Procedure** 1. Disconnect electrical connector. 2. Remove the antenna base from the roof panel.

Radio Antenna Replacement

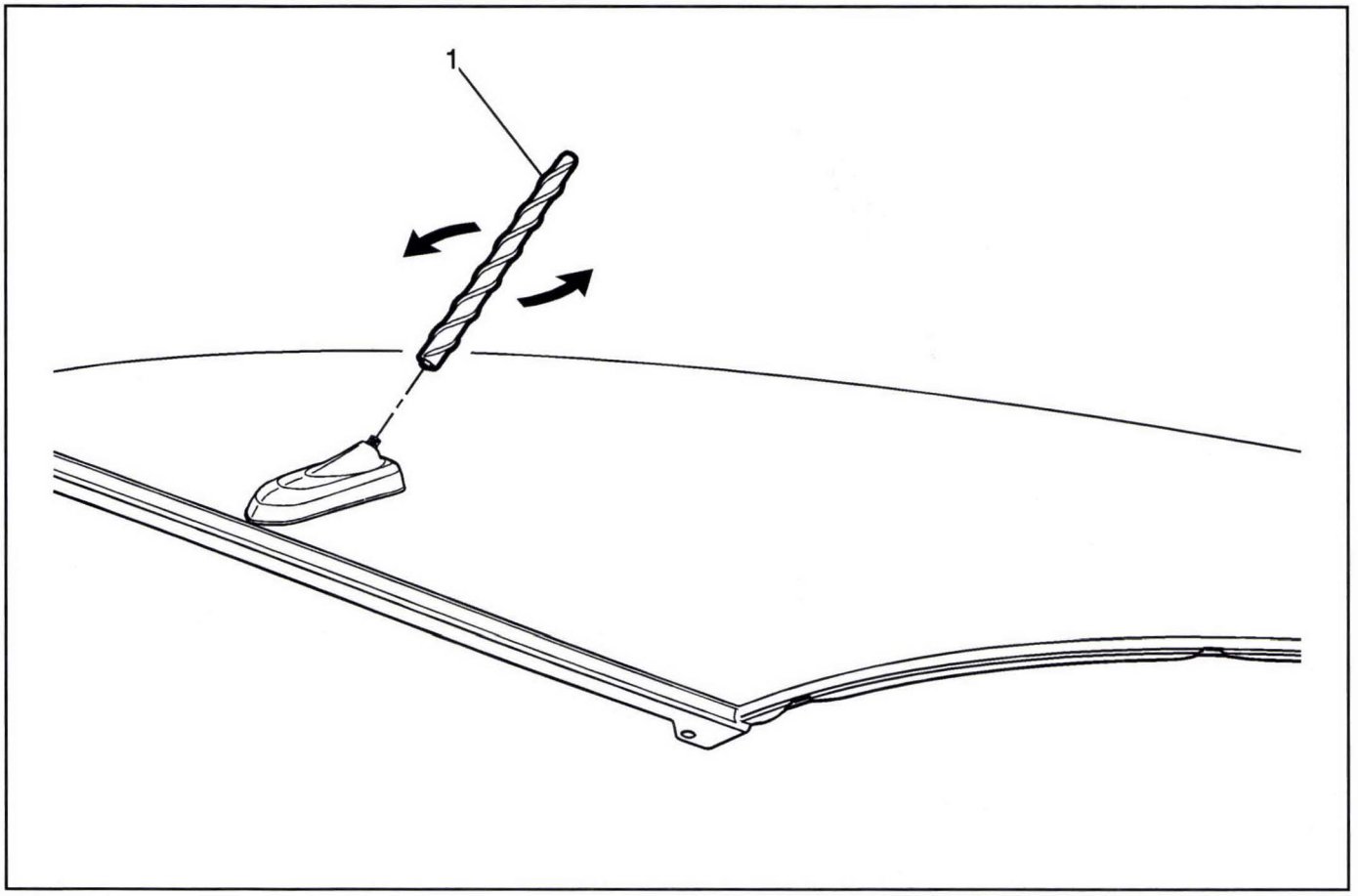

3212599

Radio Antenna Replacement

Callout	Component Name
1	Radio Antenna **Procedure** Rotate the mast counterclockwise in order to release the mast from the antenna base.

Radio Front Speaker Replacement

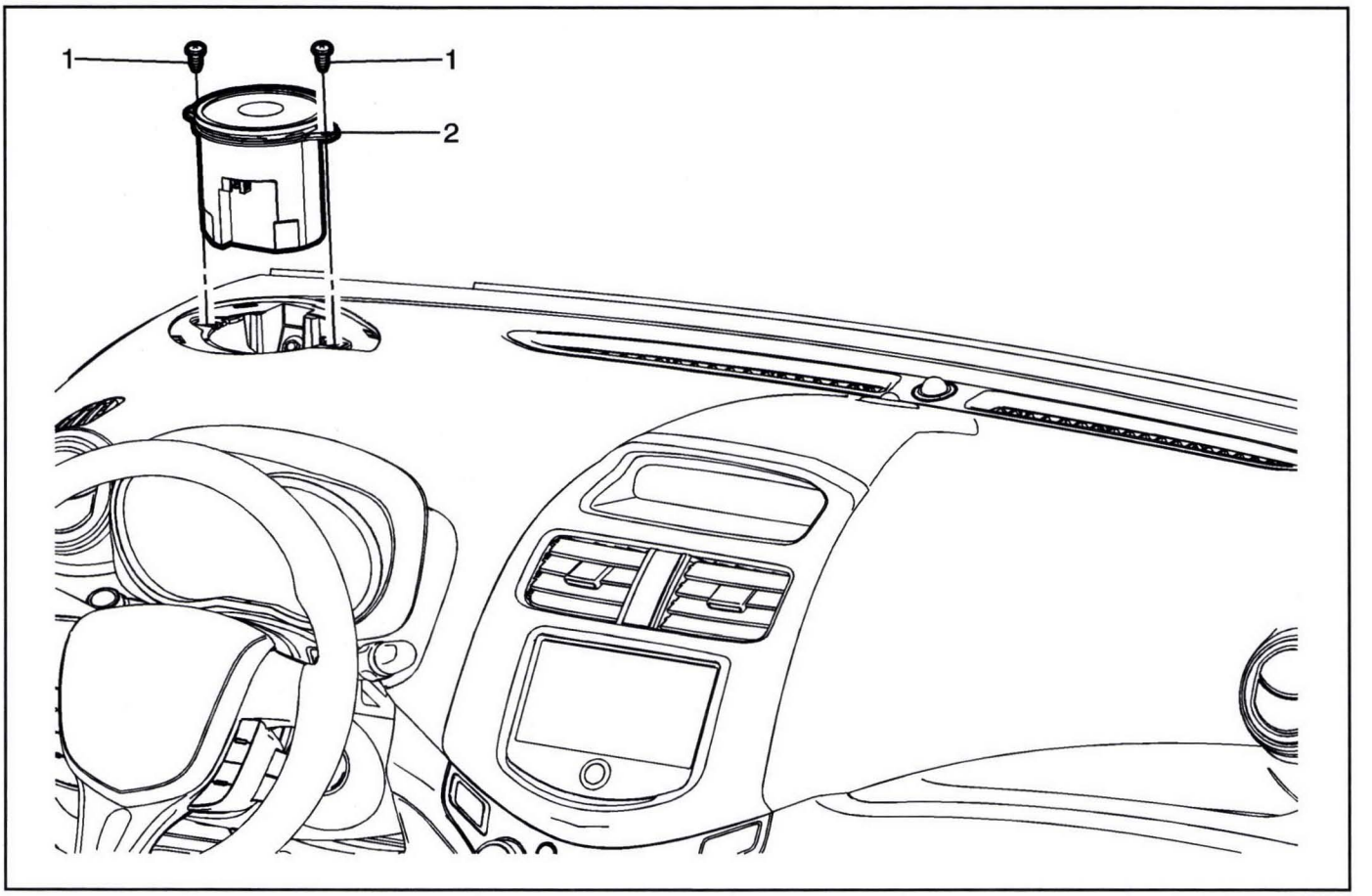

3212584

Radio Front Speaker Replacement

Callout	Component Name
Preliminary Procedure Remove the instrument panel trim pad radio speaker opening cover. Refer to *Instrument Panel Trim Pad Radio Speaker Opening Cover Replacement on page 2-38*.	
1	Radio Front Speaker Fastener (Qty: 2) **Caution:** Refer to *Fastener Caution on page 0-8*.
2	Radio Front Speaker **Procedure** Disconnect the electrical connector.

Radio Rear Speaker Replacement

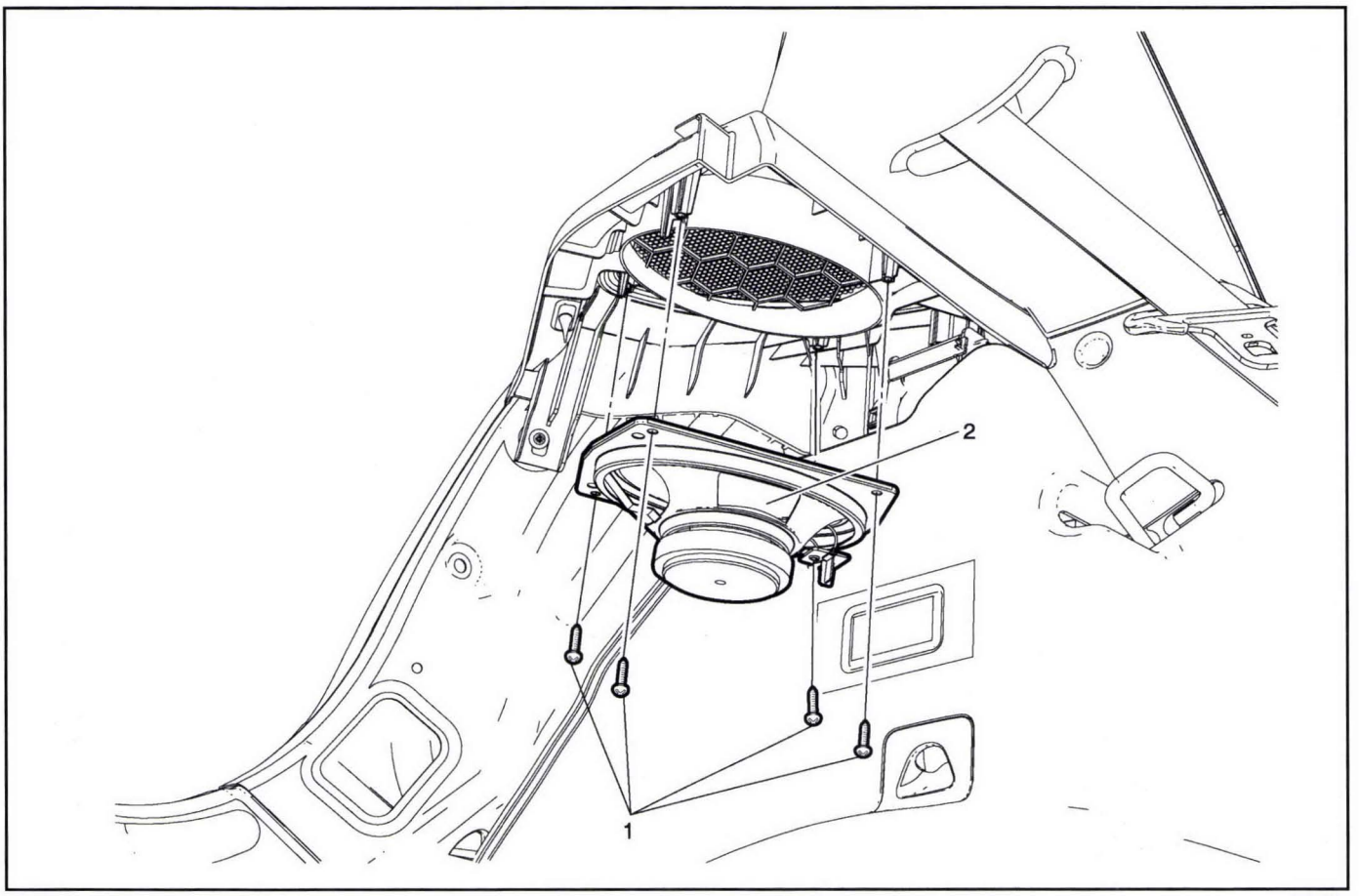

2327696

Radio Rear Speaker Replacement

Callout	Component Name
1	Radio Rear Speaker Screw (Qty: 4) **Caution:** Refer to *Fastener Caution on page 0-8.* **Tighten** 3 N•m (27 lb in)
2	Radio Rear Quarter Trim Panel Speaker

Radio Control Switch Replacement

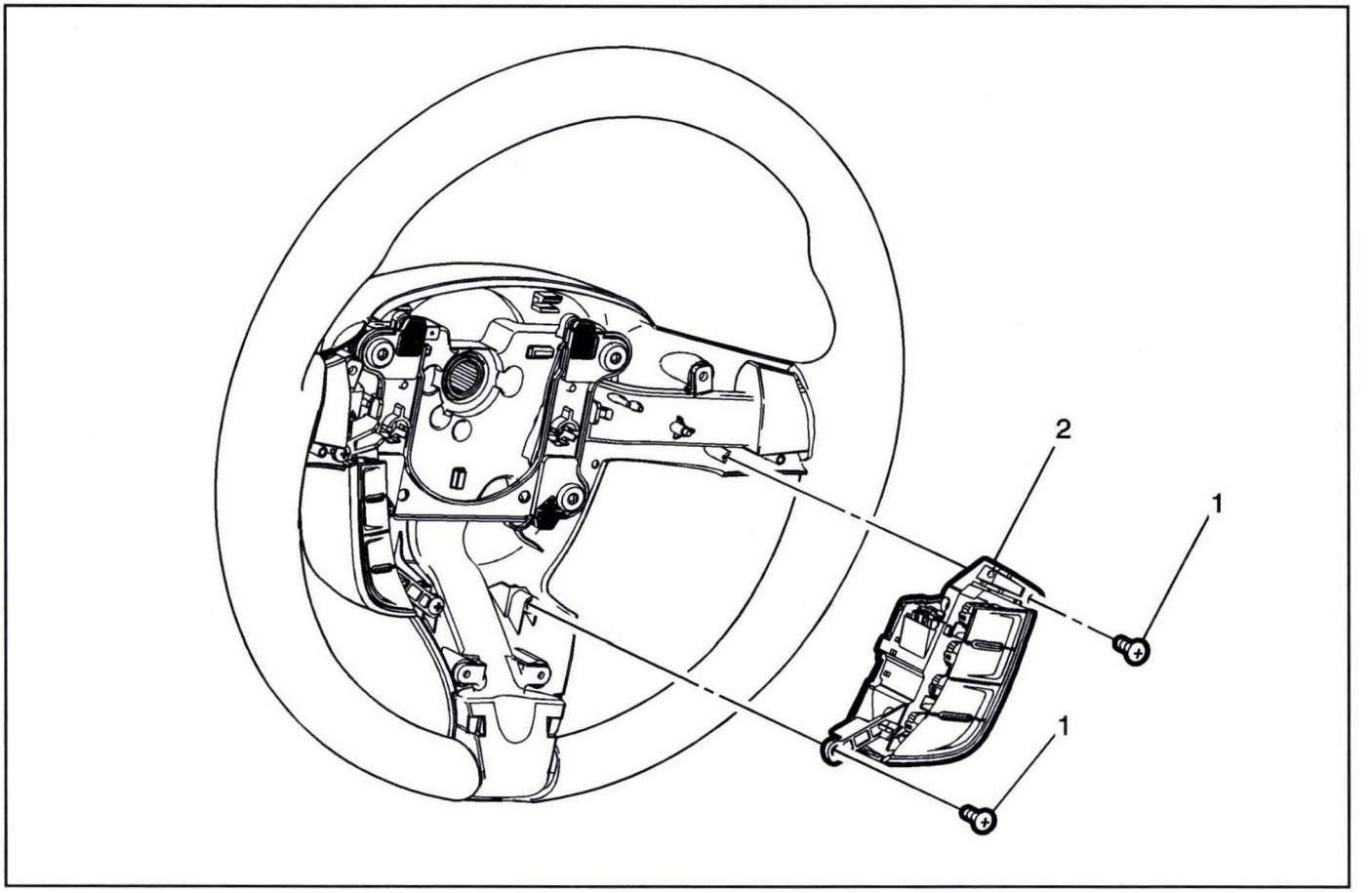

3212604

Radio Control Switch Replacement

Callout	Component Name
Preliminary Procedure Remove the steering wheel spoke lower cover. Refer to *Steering Wheel Spoke Lower Cover Replacement on page 14-33*.	
1	Radio Control Switch Fasteners (Qty: 2) **Caution:** Refer to *Fastener Caution on page 0-8*.
2	Radio Control Switch

Description and Operation

OnStar Description and Operation

This OnStar® system consists of the following components:

- Telematics communication interface control module
- OnStar® three button assembly
- Microphone
- Cellular antenna
- Navigation antenna
- Bluetooth® antenna (If equipped)
- Back up battery (If equipped)
- WiFi Hotspot (If equipped)
- TTY (Teletypewriter)

This system also interfaces with the factory installed vehicle audio system.

Onstar Block Diagram

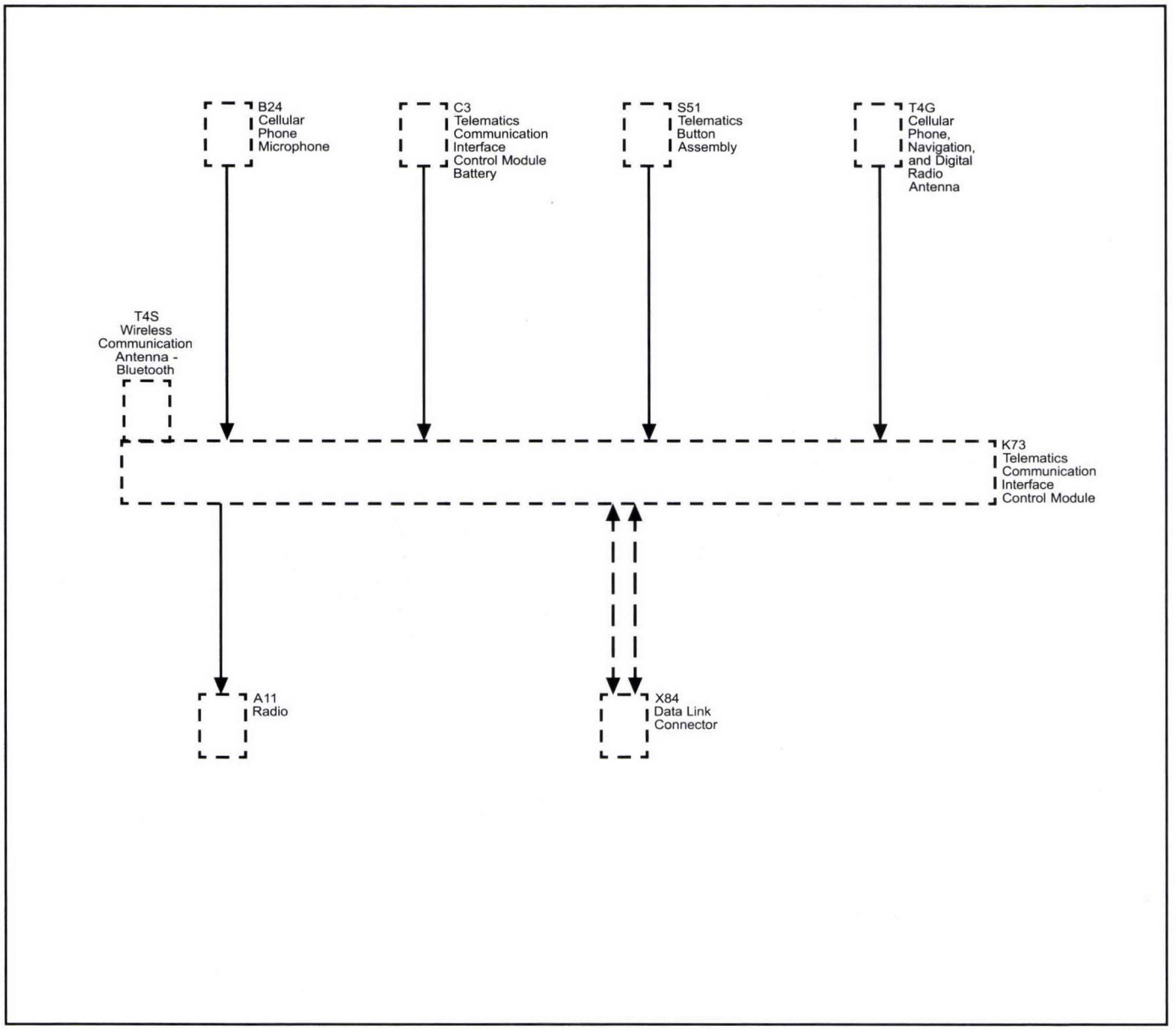

3627470

Telematics Communication Interface Control Module

The OnStar Generation 10 system uses Global System for Mobile Communication (GSM) to communicate data and voice signals over the national cellular network. The module may also have the ability to act as a Wireless Local Area Network (WLAN) Wi-Fi hotspot similar to a home wireless router. The module houses an internal WLAN antenna enabling hotspot connectivity and streaming high speed media to the entertainment system. The module also may enable Teletypewriter (TTY) and be capable of Bluetooth communication utilizing an internal antenna. The module is capable of up to 4G LTE speeds and houses 2 technology systems, one to process Global Positioning System (GPS) data, and another for cellular information. The module sends and receives all cellular communications over two cellular antennas and cellular antenna coax cables.

The OnStar Gen 10 system has two antenna inputs, a primary cellular signal and a combined GPS/secondary cellular signal. The OnStar® system uses the Unitied States Global Positioning System (GPS) signals to provide location on demand. GPS is a space-based satellite navigation system that provides location and time information in all weather conditions, anywhere on or near Earth where there is an unobstructed line of sight to four or more GPS satellites.

The module also has the capability of activating certain features such as, the horn, remote engine starting, initiating door lock/unlock, or activating the exterior lamps using the serial data circuits. These functions can be commanded by the OnStar® Call Center per a customer request or mobile device app depending on vehicle and customer subscription.

Dedicated circuits are used to connect the telematics communication interface control module to a microphone, the button assembly, radio, and if

equipped the Back Up Battery (BUB). The telematics communication interface control module communicates with the rest of the vehicle over the serial data bus.

Power is provided by a dedicated, fused B+ circuit. Ground is provided through the vehicle wiring harness attached to the module. The power mode state is determined by the telematics communication interface control module through serial data messaging.

OnStar® Three Button Assembly

- The OnStar® button assembly may be part of the rearview mirror, or a separate, stand alone unit. The button assembly is comprised of 3 buttons or 3 capacitive touch buttons and status LED's or an error indicator. The buttons are defined as follows:
  - The answer/end button, which is black with a white phone icon or a white driver figure seated with voice signals near its face, allows the user to answer and end calls or initiate speech recognition.
  - The blue OnStar® call center button, which displays the OnStar® logo, allows the user to connect to the OnStar® call center.
  - The emergency button, which displays white letters "SOS" with red background, sends a high priority emergency call to the OnStar® call center when pressed.

If the LED does not illuminate, this may indicate that the customers OnStar® subscription is not active or has expired. Push the blue OnStar button to connect to an advisor who can then verify the account status.

The telematics communication interface control module supplies 10 volts to the OnStar® button assembly on the keypad supply voltage circuit. When pressed, each button completes a circuit across a resistor allowing a specific voltage to be returned to the telematics communication interface control module on the keypad signal circuit. Depending upon the voltage range returned the telematics communication interface control module is able to identify which button has been pressed.

The OnStar® status LED or error indicator is located near the buttons. The LED is green when the system is ON and operating normally. When any indicator is illuminated and flashing, it is an indication that a call is in progress. When the LED is red, this indicates a system malfunction is present. In the event there is a system malfunction and the OnStar® system is still able to make a call, the LED will flash red during the call.

Each LED or error indicator is controlled by either the telematics communication interface control module over dedicated LED signal circuits or by low speed GM LAN serial data depending on the inside rearview mirror option. Ground for the LED is provided by the wiring harness attached to the button assembly.

Secondary OnStar® Controls

Some vehicles may have an additional button that when pushed can engage the OnStar® system. The button may be a symbol of a face with sound waves, or may say MUTE, or be a symbol of a radio speaker with a slash through it.

By engaging the OnStar® system with this feature, the user can interact with the system by use of voice commands. A complete list of these commands is supplied in the information provided to the customer. If the information is not available for reference, at any command prompt the user can say "HELP" and the telematics communication interface control module will return an audible list of available commands.

OnStar® Microphone

The cellular microphone can be part of the rearview mirror assembly, or a stand-alone unit in the headliner or roof console. In either case, the telematics communication interface control module supplies approximately 10V to the microphone on the cellular microphone signal circuit. The microphone modifies the 10V depending on the volume and voice being detected. A cellular microphone low reference circuit or a drain wire provides a ground for the microphone. The microphone signal circuits pass through the telematics communication interface control module to support entertainment voice recognition.

Cellular and GPS Antennas

The combination antenna will have any of the following antenna elements when equipped with OnStar:

- Primary cellular element
- Secondary cellular element
- GPS element
- Digital radio element
- AM/FM element

The Gen 10 OnStar® system uses 2 cellular antenna elements to send and receive cellular data, the primary cellular element and the secondary cellular element. The primary cellular signal is carried by a coax cable that connects the antenna directly to the telematics communication interface control module. Details of the secondary cellular signal are further described below.

The GPS antenna element is used to collect the signals of the orbiting GPS satellites. Within the antenna is housed a low noise amplifier that allows for a more broad and precise reception of this data. Also housed within the antenna is circuitry to combine the GPS signal and the secondary cellular signal. Without navigation, the combination GPS/secondary cellular signal is carried by a coax cable that connects directly to the telematics communication interface control module. The cable also provides a path for DC current for powering the antenna. With navigation, the combination GPS/secondary cellular signal is carried by a coax cable that connects to the navigation signal splitter. The splitter supplies the GPS signal to the navigation/entertainment system and the GPS/cellular signal to the telematics communication interface control module.

The digital radio element collects digital radio signals from two satellites and where necessary terrestrial repeaters. The digital radio signal is carried by a coax cable and connected to the digital radio receiver. Refer to Radio/Audio System Description and Operation for further details.

The radio signal is sent from a broadcast station and is then received by the AM/FM radio antenna element. The AM/FM radio signal is carried by a coax cable and is connected to the radio. Refer to Radio/Audio System Description and Operation for further details.

OnStar® RemoteLink

OnStar® RemoteLink is a mobile app to link mobile devices to a vehicle for limited diagnostics and feature controls. After downloading the app and registering the device, vehicle owners with an eligible vehicle can use their mobile devices to access real-time data from their vehicle and perform specific commands remotely.

All communication between the app and the vehicle is powered by OnStar's® advanced connected vehicle technology. An active OnStar® account as well as a valid OnStar® username and password are required to use the app. The remote commands must be enabled by logging into the user's OnStar® account prior to using the app. Refer to the owners manual for available vehicle data and control features.

Compass Heading

The telematics communication interface module has a compass feature to calculate vehicle direction which is displayed via the instrument panel cluster or designated display. The compass heading is determined by dead reckoning until the GPS 3d fix is established. The dead reckoning is accomplished by using the yaw rate sensors and wheel ticks to determine heading changes from a GPS known heading. The GPS 3d fix heading is determined by the deferential of two locations. If "CAL" is displayed on the Instrument Panel Cluster or designated display refer to the owners manual for steps to calibrate the compass.

Bluetooth® (If Equipped)

Bluetooth® wireless technology is a short-range communications technology intended to replace the cables connecting portable and/or fixed devices while maintaining high levels of security. Only vehicles with steering wheel controls will have Bluetooth® functionality. In order to utilize the vehicle's Bluetooth® system, a Bluetooth® equipped cellular phone is required.

The Bluetooth® antenna is internal to the telematics communication interface control module, radio or human machine interface module and is used to send and receive signals from a Bluetooth® enabled cellular phone. The available features and functions are determined by the software within the device being used and the telematics communication interface control module. The operating range of the signal from the vehicle is approximately 30 feet. Note that the operating range is dependent upon the cellular phone being used and battery level of the phone.

With Bluetooth® technology customers can experience hands-free calling as their Bluetooth® capable cellular phones are wirelessly connected to the vehicle. It will allow customers to place and receive calls using the steering wheel controls and voice recognition. The vehicle audio system will allow you to listen to your call through the vehicle speakers and adjust volume through steering wheel or radio controls.

Not all Bluetooth® cellular phones are guaranteed to work with the vehicle's Bluetooth® system. Based on the cellular phone's service provider and the manufacturer's implementation of Bluetooth®, not all phones support all available Bluetooth® functionality. Bluetooth® enabled cellular phones will be tested for vehicle compatibility and a feature compatibility list will be provided via the GM Bluetooth® website: http://www.gm.com/vc/bluetooth/

Bluetooth® Features Supported

The following is a list of features supported by the Bluetooth® system. Note that not all devices will support all of the listed functions.

- Automatic reconnection – highest priority phone will automatically be connected to vehicle when vehicle ignition is on
- Hands-free dialing- via digits, redial, name tags (phone number saved to a nametag via voice recognition)
- Answering a call
- Ending a call
- Mute a Call
- Rejecting a call – ignore an incoming call
- Call Waiting
- Three-way Calling – initiated from hands-free system
- Send Number During a Call – this is used when calling a menu-driven phone system
- Transfer a Call – transfer call from vehicle to cellular phone and visa versa
- Voice Pass-Thru – allow access to the voice recognition commands on the cellular phone

Pairing a Bluetooth® Cellular Phone to the Vehicle

In order to use hands-free calling, the cellular phone must be paired to the vehicle. Up to five devices can be paired to the vehicle at one time, but only one can be connected at any given time. To pair a phone, the customer must know how to operate the Bluetooth® functionality of their phone. The pairing process must only be done one time for each phone, unless that phone's information is deleted. The system will always generate a password and will provide that password if the device you are pairing does not support Secure Simple Pairing (SSP). If the device being paired does support SSP the system will not provide the password and automatically pair the device. For safety reasons, the pairing process is disabled while the vehicle is moving.

Once the Bluetooth® cellular phone has been paired with vehicle, it will automatically connect to the vehicle when the ignition is on and the device is on. When more than one paired phone is in the vehicle, the phone with the highest priority will be connected. If the cellular phone is in use while getting into the vehicle, the phone can be switched to hands-free mode with the press of a button. In addition, a call in progress can be transferred from the vehicle hands-free mode to the phone to continue the call as the customer exits the vehicle.

Complete pairing instructions are provided in the Vehicle Owners Manual.

Back-up Battery (If Equipped)

Important: Do not disconnect the main vehicle battery or remove the OnStar® fuse with the ignition key in any position other than OFF. Disconnecting power to the OnStar® module in any way while the ignition is ON or with retained accessory power activated may cause activation of the OnStar® Back-Up Battery. This action is per design as the back-up battery is designed to provide power to the telematics communication interface control module so an emergency notification call can be made after an event where the main battery is disabled. Once the Back-Up Battery is activated it will stay on until the power is restored back to the telematics communication interface control module. The telematics communication interface control module naturally chooses the main supply voltage as it's default supply, but if the main supply is removed or lost for any reason the OnStar® module will use the Back-Up Battery as a power supply as long as the default supply can not be detected. The back-up battery is not rechargeable and once discharged below 9.5 volts the back-up battery must be replaced.

Certain OnStar® equipped vehicles may also be equipped with a back-up battery. The back-up battery is a non-rechargeable, lithium battery intended to provide an auxiliary power source for the telematics communication interface control module in the event where power from the main vehicle battery is lost.

The back-up battery is intended to have a limited life span of approximately 4 years and is designed to maintain an open circuit voltage between 16 V and 9 V throughout this period. This allows the battery to power the basic functions of the telematics communication interface control module for least one 200 second (5 minute) call at the end of the 4 year span, should the main vehicle battery be lost. In the case of a vehicle losing vehicle battery power, OnStar will switch over to the backup battery based on an internal algorithm. It will look for an air-bag deploy, or near-deploy, messages from the SDM. If there are no messages the OnStar module will stay wake for a few minutes longer and monitor the buttons in the mirror. If not pressed, the modules will power down and shut off completely.

The back-up battery is connected to the telematics communication interface control module through the back-up battery positive voltage circuit and back-up battery ground circuit and is protected from a short circuit by means of an internal fuse. In the event the back-up battery, battery positive voltage circuit is shorted to the back-up battery ground circuit or chassis ground, the fuse will open and render the back-up battery permanently inoperable. The status of the back-up battery and its associated wiring is monitored by the telematics communication interface control module.

WiFi Hotspot

The telematics communication interface control module acts as a Wireless Local Area Network (WLAN) WiFi hotspot router and uses direct 4G LTE connectivity to the internet. It has the ability to connect up to 7 devices at one time. A data plan is required and when purchased, a security default password is established. There are several ways to change the SSID or password, by placing a call to the OnStar Call Center, by using the Gen 10 mobile app or through the scan tool.

The system utilizes a secure autoconnect feature between the telematics communication interface control module and the radio/HMI. No user interaction is required, it is always available and ready to connect to a dedicated in car device. The ignition must be in Run, Accessory or RAP for WiFi to operate.

Audio System Interface

When the OnStar® requires audio output, a serial data message is sent to the audio system to mute all radio functions and transmit OnStar® originated audio. The OnStar® audio is transmitted to the vehicle audio system by a dedicated signal circuit and a low reference circuit.

The audio system will mute and an audible ring will be heard though the speakers if the vehicle receives a call with the radio ON.

On some vehicles, the HVAC blower speed may be reduced when the OnStar® system is active to aid in reducing interior noise. When the system is no longer active, the blower speed will return to its previous setting.

OnStar® Sleep Cycle

The OnStar® system uses a unique sleep cycle to allow the system to receive cellular calls while the ignition is in the OFF position and retained accessory power mode has ended. This cycle enables the telematics communication interface control module to perform remote functions, such as door unlock, as commanded over the air by the OnStar® Call Center, and to continue to maintain an acceptable level of battery electrical drain.

The OnStar® system uses 4 states of readiness, depending upon the type of cellular market the vehicle is in when the ignition is put into the OFF state:

- High power
- Low power
- Sleep
- Digital standby

The high power state is in effect whenever the ignition is in the ON or RUN position, or retained accessory power is enabled, and the OnStar® system is sending or receiving calls or when the system is performing a remote function.

The low power state is in effect when the OnStar® system is idle with the ignition in the ON or RUN position, or with retained accessory power enabled.

The sleep state is entered after the vehicle has been shut off and the retained accessory power has timed out while in an analog cellular area. At a predetermined time recorded within the telematics communication interface control module, the system re-enters the low power state to listen for a call from the OnStar® Call Center for 1 minute. After this interval, the system will again return to the sleep state for 9 minutes. If a call is sent during the 1 minute interval, the OnStar® system will receive the call and immediately go into the high power mode to perform any requested functions. If no call is received during the 1 minute interval, the system will go back into the sleep mode for another 9 minutes.

This process will continue for up to 48 hours, after which the OnStar® system will turn off until the ignition is turned to the ON or RUN position.

The digital standby power state is entered after the vehicle has been shut off and the retained accessory power has timed out while in a digital cellular area. When in digital standby mode, the OnStar® module is able to perform all remote functions as commanded by an OnStar® advisor at any time, for a continuous 120 hours. After 120 hours, the OnStar® module will go into sleep mode until a wake up signal from the vehicle is seen by the telematics communication interface control module. If the OnStar module loses the digital cellular signal it will revert to analog mode and follow the standard sleep state (9 minutes OFF, 1 minute standby) based on the time of the GPS signals, this will continue until a digital cellular signal is again received.

If the OnStar® system loses battery power while the system is in a standby or sleep mode, the system will remain OFF until battery power is restored and the ignition is turned to the ON or RUN position.

Features

OnStar® Personal Calling

The hands free, OnStar® personal calling cellular phone feature is an additional feature of the OnStar® system. This feature is embedded within the telematics communication interface control module; however it must be activated by an OnStar® advisor. OnStar® personal calling operates similar to most hand held cellular phones in that the availability for its usage is based on minutes or units. The customer must have a current OnStar® subscription, as this feature cannot be utilized without it. To use OnStar® personal calling, the customer must also purchase units (minutes) as outlined in the owners guide provided with the OnStar® system. Units begin to deplete, 1 unit is equal to 1 minute, as the customer makes outbound phone calls, answers inbound phone calls, or while connected to the OnStar® virtual advisor. In addition, units may also have an expiration date, depending upon the type of units purchased.

Customers have the ability to store telephone numbers within the module, referenced by a nametag for the convenience of frequently dialed numbers. After storing a nametag, the user can dial this number by initiating the OnStar® personal calling feature, speaking the word "call," and repeating the nametag assigned.

Turn by Turn Navigation

Turn by Turn Navigation allows the driver to contact OnStar® to obtain directions for driving from a current location to a desired location. The Turn by Turn Navigation system stores your planned route and continually checks your position along that route, when you deviate from the planned route, the system will recognize this and prompt the driver with verbal prompts for how to proceed. The driver then responds verbally to direct the system to continue the current routing or to recalculate the route because of a missed turn.

Advisor Record Feature

The Advisor Record Feature allows the user to store any information given during a call with an OnStar® Advisor. Recording is activated by pressing the blue OnStar button during a call; pressing the button a second time stops the recording. The stored information can be played back by pressing the phone button on the three button assembly and using the voice command “Advisor Playback”.

Teletypewriter (TTY) Users

OnStar has the ability to communicate to deaf, hard-of-hearing, or speech-impaired customers while in the vehicle. The available dealer-installed TTY system can provide in-vehicle access to all of the OnStar services, except Virtual Advisor and OnStar Turn-by-Turn Navigation.

Deactivated OnStar® Accounts

In the event a customer has not renewed their OnStar® account after expiration or the account was never activated, OnStar® will make a discrete cellular call to the vehicle to deactivate the OnStar® system. Before taking this action, customers are notified that the OnStar® system in their vehicle will be deactivated unless they elect to renew the account. After the OnStar® account has been deactivated, customers will experience the following:

- The OnStar® status LED will not illuminate.
- The OnStar® system will NOT attempt to connect to the OnStar® Call Center in the event of a collision or if the vehicle's front air bags deploy for any other reason.
- An emergency button press will play a demo message indicating the service has been deactivated.
- An OnStar® Call Center button press will connect the customer with a dedicated sales team who can sell an OnStar® subscription and reactivate the vehicle. Depending on the type of OnStar® hardware in the vehicle, the customer may first hear a demonstration message stating there is no current OnStar® subscription for the vehicle, and directing the customer what to do to activate services.
- OnStar® personal calling will not be available, as this feature requires the customer to have a current OnStar® account. Attempts to use this feature may result in cellular connection failure messages and the inability to connect to the number dialed.

Certain vehicles that have never had an active OnStar® account, or that have been deactivated, may be unable to establish a connection with the OnStar® Call Center. When normal published diagnostic procedures do not indicate a possible cause for the no connect concern, the vehicle may have been deactivated. For deactivated vehicles, a no connect response should be considered normal operation. Further diagnosis and subsequent repair is only necessary should the customer elect to become an active OnStar® subscriber or renew the account subscription.

OnStar® Cellular, GPS, and Diagnostic Limitations

The proper operation of the OnStar® System is dependent on several elements outside the components integrated into the vehicle. These include the National Cellular Network Infrastructure, the cellular telephone carriers within the network, and the GPS.

The cellular operation of the OnStar® system may be inhibited by factors such as the users range from an analog or digital cellular tower, the state of the cellular carrier's equipment, and the location where the call is placed. Making an OnStar® key press in areas that lack sufficient cellular coverage or have a temporary equipment failure will result in either the inability of a call to complete with a data transfer or the complete inability to connect to the OnStar® Call Center. The OnStar® system may also experience connection issues if the identification numbers for the module, station identification number, electronic serial number or manufacturers electronic ID, are not recognized by the cellular carriers local signal receiving towers.

The satellites that orbit earth providing the OnStar system with GPS data have almost no failures associated with them. In the event of a no GPS concern, the failure will likely lie with the inability of the system to gain GPS signals because of its location, i.e. in a parking structure, hardware failure, or being mistaken with an OnStar® call which has reached the Call Center without vehicle data.

During diagnostic testing of the OnStar® system, the technician should ensure the vehicle is located in an area that has a clear unobstructed view of the open sky, and preferably, an area where analog or digital cellular calls have been successfully placed. These areas can be found by successfully making an OnStar® keypress in a known good OnStar® equipped vehicle and confirming success with the OnStar® Call Center advisor. Such places can be used as a permanent reference for future OnStar® testing.

Mobile Identification Number and Mobile Directory Number

The telematics communication interface control module utilizes 2 numbers for cellular device identification, call routing and connection, a mobile identification number and a mobile directory number. The mobile identification number represents the number used by the cellular carrier for call routing purposes while the mobile directory number represents the number dialed to reach the cellular device.

Operation of the OnStar® Speech Recognition Systems

OnStar® users communicate with 2 speech recognition systems. Speech recognition allows the user to speak to one computer in the vehicle, and one reached over a phone line. The computer tries to understand the users command, and responds by speaking back, or by taking the appropriate action, e.g. dialing the phone.

- Personal Calling uses a speech recognition system that resides in the vehicle. When the user presses the phone button, the system states, Ready, and listens for the user's command. The user can speak commands to control the hands-free phone.
- Virtual advisor is a remote speech recognition system that the caller can access by making a phone call. The user connects to virtual advisor by requesting it during personal calling use. The user is then transferred to the virtual advisor server and talks to it via a cellular connection.

The OnStar® speech recognition systems use speech technology that is designed to understand a wide range of American English speakers. Although there is no one right way to speak English, the system will work best when users try to modify their pronunciation should they encounter difficulty. Users who do not obtain good results are advised to try the tips and workarounds found in the Infotainment System Manual or the Owners Manual.

Radio/Audio System Description and Operation

The entertainment system on this vehicle may have several different configurations available to it. To determine the specific configuration of the vehicle, please see the Service Parts ID Label, and refer to *RPO Code List on page 1-13*.

Each item in the list below represents topics covered in detail below.

- Radio Circuit Operation
- Antenna System
- Radio Reception
- Digital Radio Receiver (If equipped)
- Speaker Operation
- Theft Deterrent
- OnStar ®
- Auxiliary Audio Input Jack
- USB Port (if equipped)
- Bluetooth ® (If equipped)
- Applications (if equipped)
- Steering Wheel Controls (If equipped)
- Speed Controlled Volume (SCV) (If equipped)

Radio/Audio Block Diagram

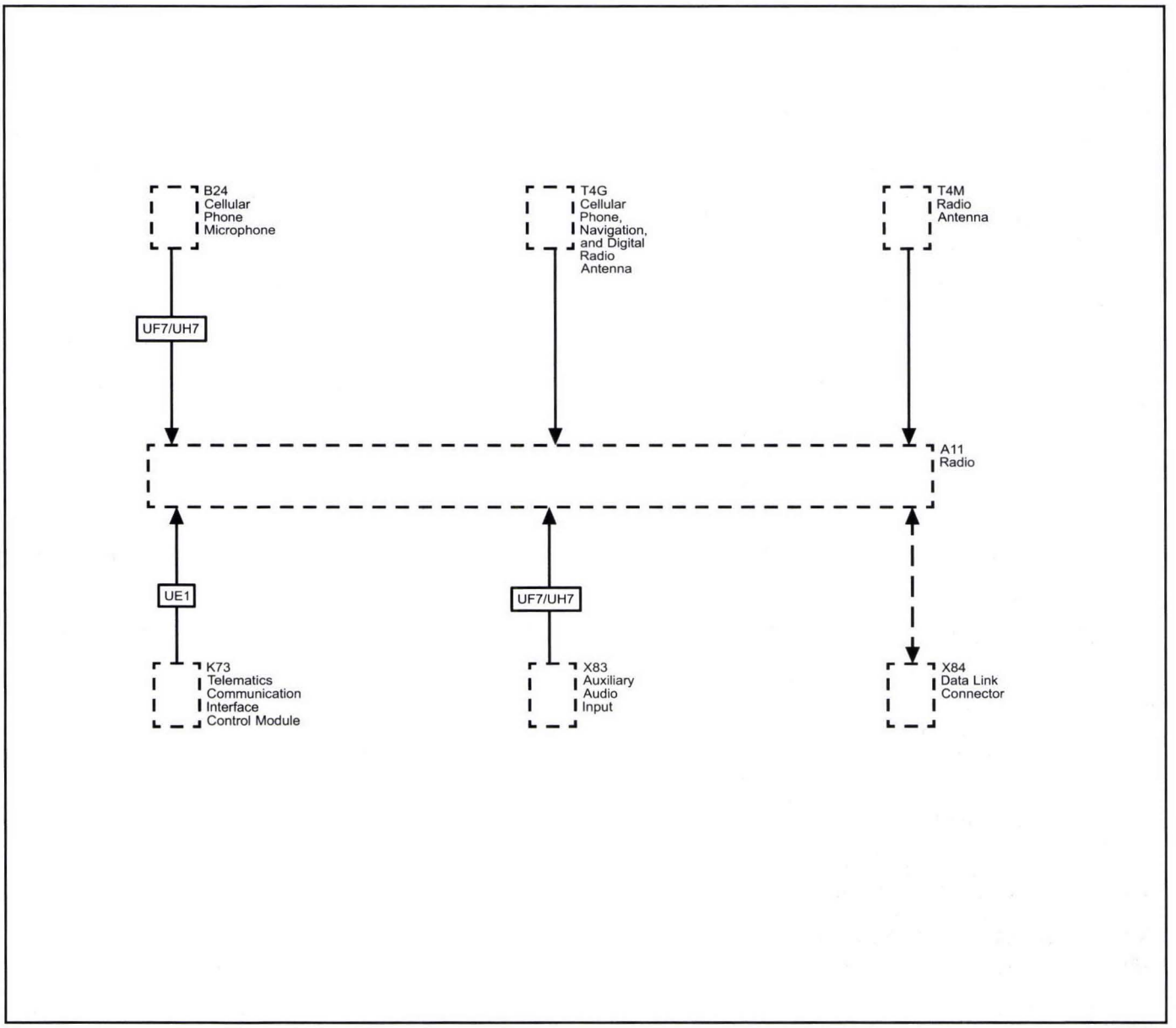

3666064

Radio Circuit Operation

Radio Power

The radio does not use a discrete ignition feed circuit for power moding. The power mode master provides the system power mode to the radio via serial data messages. The power mode master determines the system power mode by processing power mode information from ignition switch inputs. Serial data power modes supported by the radio are OFF, ACCESSORY, RUN, and CRANK REQUEST.

Radio Grounds

The vehicle harness provides a ground for the radio circuits. The radio may also be case grounded.

Radio Data Link Communication

The radio communicates with other modules via serial data.

Radio Audio Outputs

Each of the audio output channel circuits (+) and (-), at the radio have a DC bias voltage that is approximately one half of battery voltage. The audio being played on the system is produced by a varying AC voltage that is centered around the DC bias voltage on the same circuit. The AC voltage is what causes the speaker cone to move and produce sound. The frequency (Hz) of the AC voltage signal is directly related to the frequency of the input (audio source playing) to the audio system. Both the DC bias voltage and the AC voltage signals are needed for the audio system to properly produce sound.

Remote Enable Output

The remote enable circuit is a discrete 12 V signal supplied to infotainment system components when the radio is producing audio, needs the front display on, needs video entertainment system components on, or needs to produce chimes. This signal is used to

control the power state of the components. There is no output on radio the remote enable circuit when the vehicle is in the CRANK powermode, this is to minimize current consumption from the attached modules and also to avoid audio pops during crank events.

Antenna System

Multi-Band Antenna

The multi-band antenna is located on the roof of the vehicle. Keep this antenna clear of snow and ice build up for clear reception. If the vehicle has a sunroof, the performance of the system may be affected if the sunroof is open. Loading items onto the roof of the vehicle can interfere with the performance of the system, ensure the multi-band antenna is not obstructed.

The radio antenna is enabled when the radio is turned on. The radio provides battery voltage to the antenna using the center conductor of the antenna coaxial cable. This DC voltage does not affect the incoming radio signal. When a 12 V signal is seen by the antenna on the center conductor of the antenna coax, both AM and FM signals are amplified.

Radio Reception

AM/FM Radio Signal

The radio signal is sent from a broadcast station and is then received by an antenna. The strength of the signal received depends on the following:

- The power output (wattage) of the broadcasting station
- The location of the vehicle (or receiver) relative to the broadcast tower.
- Height of the broadcast antenna
- Height of the receiving antenna
- Obstacles between the tower and the receiver
- Atmospheric conditions
- What band (AM or FM) the station is broadcasting
- Type of antenna and the ground plane

Radio Data System (RDS)

The RDS feature is available only on FM stations that broadcast RDS information. This system relies upon receiving specific information from these stations and only works when the information is available. While the radio is tuned to an FM-RDS station, the station name or call letters display. RDS data is carried in what is known as a "subcarrier". A subcarrier is a frequency that the FM broadcaster is authorized to use to send data that is not audible in the main audio program.

RDS functions will only work with FM broadcast stations that are broadcasting RDS data. Not all FM Broadcast stations broadcast RDS data or offer all of the RDS services.

The information displayed is dependent upon the information broadcast by the particular station. The information may vary greatly between stations. RDS functions may not work properly when reception is weak, reception is of poor quality, or RDS is not implemented properly by the FM Broadcaster. In some cases, a radio station broadcasting incorrect information may cause the RDS features of the radio to appear to work improperly.

With RDS, the radio can do the following:

- Display text information such as: station identification, type of programming, and general information (artist and song title, station messages, call in phone numbers, etc.).
- Seek to stations broadcasting the selected type of programming
- Receive announcements concerning local and national emergencies
- Receive alert warnings of local or national emergencies. When an alert announcement comes on the current radio station, ALERT! displays. You will hear the announcement, even if the volume is low or a CD is playing. If a CD is playing, play stops during the announcement. Alert announcements cannot be turned off. ALERT! is not affected by tests of the emergency broadcast system. This feature is not supported by all RDS stations.

Digital Radio Receiver (if equipped)

The XM satellite radio is integrated into the radio. XM satellite radio provides digital radio reception. The XM signal is broadcast from two satellites and, where necessary, terrestrial repeaters. The high power satellites allow the antenna to receive the XM signal even when foliage and other partial obstructions block the antennas view of the satellite. Terrestrial repeaters are used in dense urban areas. These repeaters will receive the satellite signal and re-broadcast them at much higher power levels in order to ensure reception in areas with densely packed tall buildings. A service fee is required in order to receive the XM service.

Speaker Operation

Speakers turn electrical energy into mechanical energy to move air, using a permanent magnet and an electromagnet. The electromagnet is energized when the radio or amplifier (if equipped) delivers current to the voice coil on the speaker. The voice coil will form a north and south pole that will cause the voice coil and the speaker cone to move in relation to the permanent magnet. The current delivered to the speaker is rapidly changing alternating current (A/C). This causes the speaker cone to move in two directions producing sound.

Theft Deterrent

The radio theft deterrent system is intended to disable or limit radio functionality if incorrect vehicle information is received by the radio. The radio disables functionality if the VIN information received by the radio does not match the VIN information that has been learned by the radio. The radio receives this information via serial data. A possible cause of incorrect VIN info could be the radio was originally installed in another vehicle.

The radio has the following theft operating modes as part of the theft deterrent system:

- Normal Mode: The radio has learned a correct VIN sequence and the VIN information received via serial data matches the learned VIN sequence. In this mode the radio has full functionality.
- No VIN Mode: The radio has not received or learned a correct VIN sequence. In this mode the radio has limited functionality.
- Theft Detected Mode: The radio has learned a correct VIN sequence and the VIN information received via serial data does NOT match the learned VIN sequence. In this mode the radio may be disabled or have limited functionality. The radio display will indicate that theft protection is active.

OnStar ® (If equipped)

When OnStar is activated, a serial data message is sent to the radio that activates a software program. When the software begins its process, the fade goes to the front, Bass and Treble are set to the mid range, the outputs are mono, and the audio source is OnStar. OnStar takes priority over any other audio source. All of these actions are preset values stored in the radio.

For additional OnStar information, refer to *OnStar Description and Operation on page 8-63*.

Auxiliary Audio Input Jack

The infotainment system has a 3.5mm (1/8 in.) auxiliary audio input jack available on the face of the radio. This input interfaces internally with the radio, no external circuits are involved.

The infotainment system may also have an additional auxiliary audio input jack located in the instrument panel compartment. Audio signals from the device are sent to the radio from the auxiliary jack via the left, right, and common audio signal circuits.

When a portable audio playback device is connected to the auxiliary jack, an internal switch detects the connection and the radio will switch to AUX as the audio source.

- When a device is first connected to the 3.5mm (1/8 in.) input jack the infotainment system automatically switches to that device. If an auxiliary device has already been connected, press the AUX or CD/AUX button to select the device.
- Playback of an audio device that is connected to the 3.5mm jack can only be controlled using the controls on the device.
- The volume control on the device may need to be adjusted to ensure sufficient playback volume through the infotainment system.

USB Port (if equipped)

The infotainment system may have a USB connector located in the instrument panel compartment. The USB connector interfaces directly with the radio. The USB connector supports both USB standards 1.1 and 2.0.

USB supported devices:

- USB Flash Sticks (Thumb Drives)
- Portable USB Hard Drives
- Portable Digital Media Players (iPOD®, ZUNE®, etc.)

Depending on the USB device, some devices may not be recognized, or some features/functions may not be able to be controlled with the radio controls. USB HUB devices are not supported.

Bluetooth ® (If Equipped)

Bluetooth ® wireless technology is a short-range communications technology intended to replace the cables connecting portable and/or fixed devices while maintaining high levels of security. The operating range of the signal is approximately 30 feet.

The available features and functions are determined by the type of device and the software within the devices being used. For a feature or function to operate, it must be supported in both devices.

The first connection between devices is established through a process called pairing. In order to pair two devices, a password (passkey) has to be exchanged between the two devices. One device will generate the password, the other device accepts the password to complete the process. Once the devices are paired, future connections between the devices will occur automatically when the devices are on and within range of each other.

The Bluetooth ® hardware is internal to the radio. The radio supports streaming of data (music, voice, information) from cellular phones and other mobile devices that support those features. The radio may also be capable of interfacing with cellular phones for hands-free features.

- The device must be paired to the radio to use the available Bluetooth ® feature(s). The pairing process must only be performed once for each device, unless that device's information is deleted.
- Up to five devices can be paired to the system, but only one can be connected at any given time.
- Streaming Audio allows playing music from the mobile device wirelessly. Music stored on the mobile device can be viewed and controlled from the display.
- To stream audio from a mobile device, the device must be unlocked, and any additional applications should be closed.

Refer to the vehicle owners manual, supplements, and the device manufacturers information for pairing instructions.

Applications (If equipped)

When the system is equipped with Bluetooth ®, the system may be capable of using applications, commonly referred to as apps.

The term application refers to any piece of software that works on a system (hardware) that is being operated by it's own software. Applications are typically small

software programs which uses the hardware to perform a specific task, as opposed to operating the entire system.

- For an application to be used, it must be installed on both the vehicle infotainment system and a compatible mobile device.
- The device must be connected to the system. this may be done wirelessly via Bluetooth ®, or via the vehicle USB port. Refer to the device manufacturers information for the proper connection method.
- When the device is connected, the application on the radio is used to remotely access and control the application on the mobile device.
- The application must work correctly on the device to work with the vehicle infotainment system.
- The user may be required to log-in to the application on the mobile device before using the application from the vehicle controls.
- Using applications will use the device's data plan.
- The device must be unlocked, and any additional applications should be closed.

Refer to the owner's manual and supplements for information on mobile devices, control, and operation.

Steering Wheel Controls (If equipped)

Some audio functions are available using the steering wheel controls. The steering wheel controls duplicate the function of the primary controls available on the radio.

For additional information on steering wheel controls, refer to *Steering Wheel Controls Description and Operation on page 8-112*.

Speed Compensated Volume (If equipped)

With Speed Controlled Volume (SCV), the audio system will adjust automatically to make up for road and wind noise as you drive, by increasing the volume as vehicle speed increases. To use SCV, set the volume at the desired level, and then select either Low, Medium, or High. To turn SCV off, select the Off screen button.

Special Tools and Equipment

Illustration	Tool Number/Description
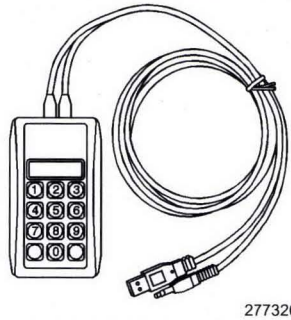 2773268	EL–50334–20 Multi-Media Interface Tester (MIT)

Illustration	Tool Number/Description
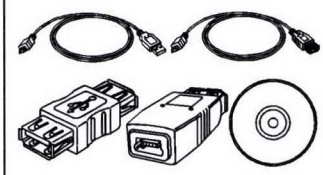 2551420	EL–50334–50 USB Cable and Adapter Kit
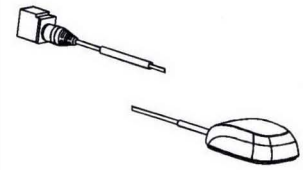 1709512	EL-48028 Digital Radio Test Antenna
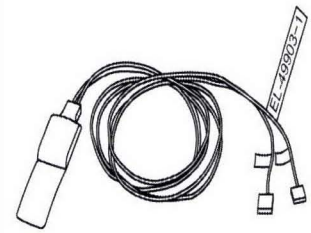 4037602	EL-49903–1 Test Antenna, Navn-Cell Comn

Illustration	Tool Number/Description
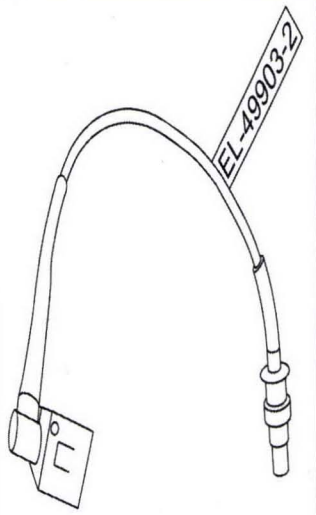 4037603	EL-49903–2 Adapter Cable-UHF RT Angle
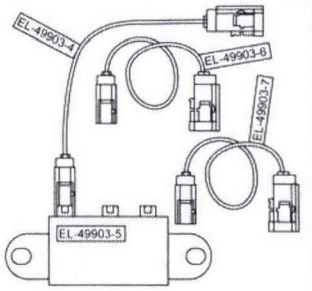 4037604	EL-49903–3A Combiner Kit, Test Antenna
3705639	EL-50334–12 Infotainment Test Cable – RSE
3705640	EL-50334–13 Infotainment Test Cable – RSE Splitter

Illustration	Tool Number/Description
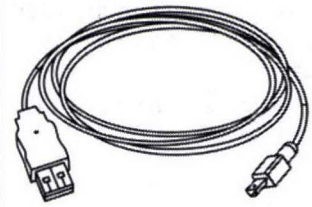 3705642	EL-50334–14 Infotainment Test Cable

Special Tools (MIT Tool Instructions)

Bluetooth Pairing for Vehicles with Radio RPO: UF7

Either reset the pin code on the radio to 0000, or go under Device Info on the radio and see what the pin code is (to enter it later on the MIT).

1. Turn the BT discoverable ON in the radio Bluetooth settings.
2. Press Pair Device on radio (DO NOT PRESS SEARCH BLUETOOTH DEVICES ON THE RADIO).
3. Press the Pair button on the MIT.
4. When the three LED lights begin flashing on the MIT, enter the pin code (either 0000 if you reset it to that or what the radio pin code was).
5. MIT will then automatically connect with the radio and should show "MIT Connected" message.

   Make test call and the audio streaming test.

Holden Radio Bluetooth Pairing Instructions

1. Using the radio controls, place the radio into “Discoverable Mode”.
2. Place the MIT into Bluetooth mode by pressing TEST SELECTOR until the Bluetooth LED is illuminated.
3. With the MIT in Bluetooth mode Press and Release the #1 button (the Bluetooth LED will begin to slowly blink).
4. Now Press and release the PAIR/CALL button on the MIT (the Bluetooth LED will begin to blink a little faster).
5. On the radio Enter the PASSKEY when prompted: (press “0000” then Press “OK”).
6. The MIT and radio will PAIR and CONNECT (the Bluetooth LED will be Fast Flashing).
7. Use as regular MIT at this point.

For all other Radios

Testing the Bluetooth Function

1. Verify connection of the MIT to the USB port.
2. Press and release the TEST SELECTOR button until the Bluetooth LED illuminates.
3. Disable all other Bluetooth devices present in the vehicle (ie. cell phones, laptops, etc.).

Standard Bluetooth Pairing/Bonding

1. Use the vehicle controls to place the radio into Bluetooth Pairing mode. The vehicle will prompt you with a security code.
2. Press and release the PAIR/CALL button. The Bluetooth LED will blink slowly while preparing to have a security code entered.
3. Wait for the all three LEDs to blink confirming it is ready to have the security code entered.
4. Enter the code with the MIT keypad and hit ENTER.
5. The Bluetooth LED will blink slowly while pairing/bonding and move to a quick flash once paired/bonded.

   The vehicle should confirm pairing/bonding is complete.

Streaming Audio

1. Confirm pairing/bonding is complete – the Bluetooth LED will be in a quick flash mode.
2. On some radios the MIT automatically begins streaming audio via A2DP. The audio playback will confirm that the Bluetooth connection using streaming and the audio is working correctly.
3. On other radios you will need to select Bluetooth Audio from the Source menu to verify Audio Streaming.
4. Audio playback confirms that the Bluetooth connection using Streaming Audio is working correctly.
5. Placing a test call will temporarily stop the streaming audio function, but upon disconnection of that test call,

   the streaming audio from the MIT will resume.

To Place a Test Call

1. Confirm pairing/bonding is complete – the Bluetooth LED will be in a quick flash mode. If the vehicle is equipped with streaming audio, and the radio is set to play a Bluetooth audio file, the streaming audio playback will be audible.
2. Press and release PAIR/CALL button to place a test call. Streaming audio will be temporarily turned off.
3. Use the vehicle controls to answer the call.

   Note: If the call is not answered within several rings, the MIT's audio files will not transmit, even though an active call is occurring.

4. Audio playback confirms that the Bluetooth connectivity is working correctly.

   Note: The MIT will remain paired/bonded when the call is ended by the vehicle. To re-test the call function, place the MIT in Bluetooth mode and press and release the Pair button to reconnect. When testing is completed, delete MIT from the audio system before returning the vehicle to the customer.

5. Use the vehicle controls to end the call. If applicable, streaming audio will resume.

Testing the AUX/Line-In Function

1. Verify connection of the MIT as stated above.
2. Press and release the TEST SELECTOR button until the MIT AUX LED illuminates.
3. Use the vehicle controls to put the audio system into Audio (Line-In) mode.
4. Audio playback confirms that the audio input is working correctly.

Testing the USB Function

1. Verify connection of the MIT as stated above.
2. Press and release the TEST SELECTOR button until the MIT USB LED illuminates.
3. Use the vehicle controls to put the audio system into USB mode.

   Note: Volume levels may vary dependent upon vehicle audio system.

4. Audio playback confirms that the USB is working correctly.

Troubleshooting Guide

If the MIT unit is still not working properly after following the below troubleshooting, the unit is malfunctioning and should be repaired or replaced.

Unit not Working

- Verify the MIT is powered on correctly as indicated by the green Power LED.
- If Power LED is not illuminated, verify USB power source is working properly.
- If USB power adapter is being used to power the MIT, check and, if necessary, replace the fuse in adapter.

Problem with Aux/Line-In Test

- Verify Aux/Line- In test cable is inserted properly into the vehicle audio input jack. Verify the MIT is in Aux/Line-In mode as indicated by the red AUX LED.
- Verify the vehicle audio system is in Auxiliary or Line-in mode. Verify the vehicle audio system volume is turned up and not in mute mode.

Problem with USB Test

- Verify MIT is in USB mode as indicated by the red USB LED. Verify the vehicle audio system is in USB mode.
- Verify the vehicle audio system volume is turned up and not in mute mode.

Problem with Bluetooth Pairing

- Delete previous devices stored in the device list of the radio and the pair the MIT
- Remove USB cable, and then reconnect to reset the MIT. Carefully follow the bonding instructions for the correct Passkey procedure.

Problem with Bluetooth Test Call Audio

- Verify the MIT is paired with the vehicle. This is indicated by the quick flashing Bluetooth LED.
- Audio system should have indicated the MIT is bonded.

Displays and Gauges

Specifications

Fastener Tightening Specifications

Application	Specification	
	Metric	English
Instrument Cluster Nut	10 N•m	89 lb in

Ambient Air Temperature Sensor Resistance

Temperature		Ambient Air Temp Sensor	Ambient Air Temp Sensor (Min)	Ambient Air Temp Sensor (Max)
°C	°F	(kΩ)	(kΩ)	(kΩ)
−40	−40	169.4	158.46	181.19
−30	−22	88.74	83.39	94.47
−20	−4	48.58	47.19	50.02
−10	14	27.67	26.93	28.44
0	32	16.33	15.92	16.75
10	50	9.95	9.71	10.19
20	68	6.24	6.1	6.38
30	86	4.02	3.94	4.11
40	104	2.66	2.61	2.71
50	122	1.8	1.73	1.87
60	140	1.24	1.2	1.29

Schematic and Routing Diagrams

Instrument Cluster Schematics (Power, Ground, Data Communication and Indicators)

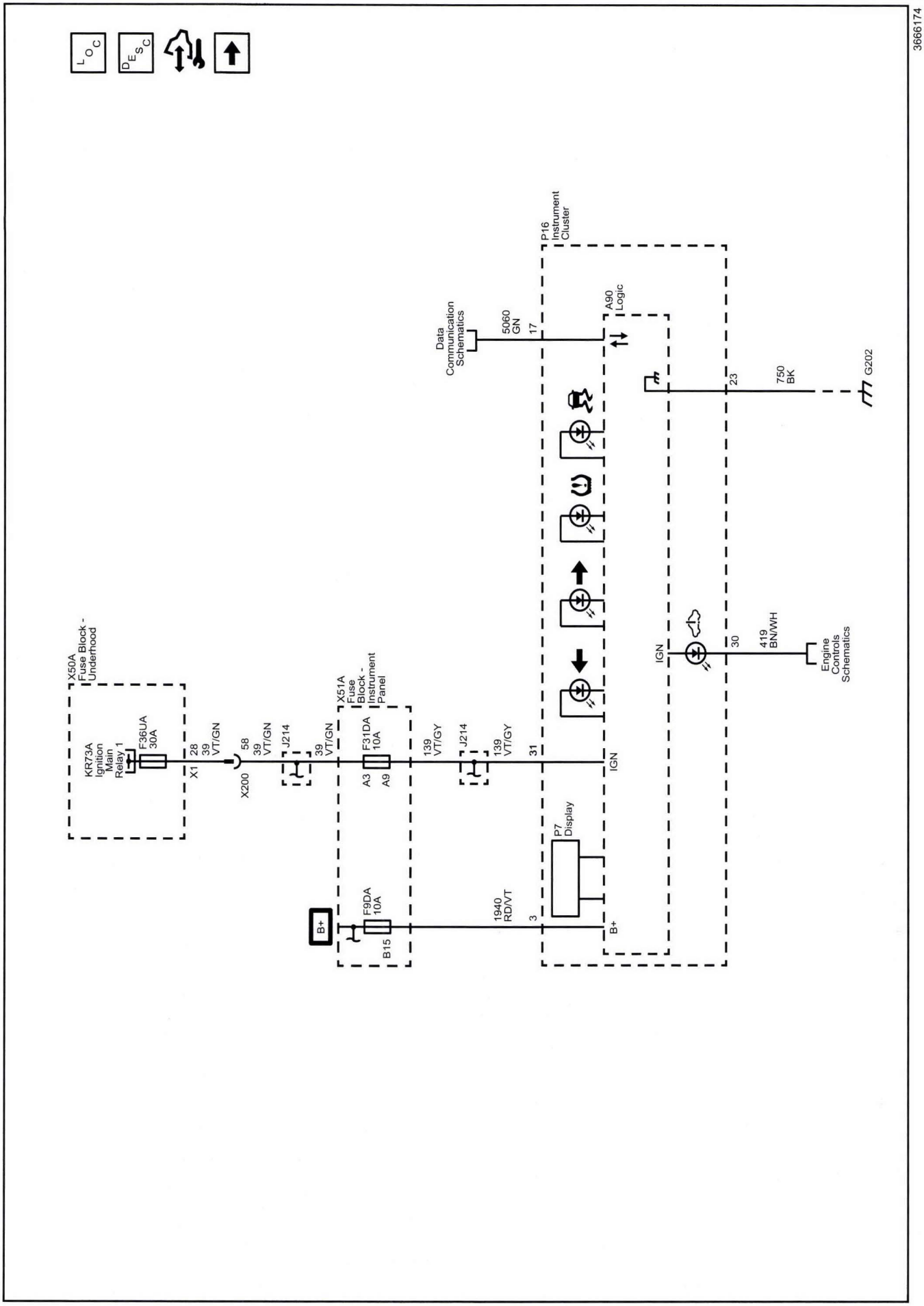

Driver Information System Schematics (Driver Information Center)

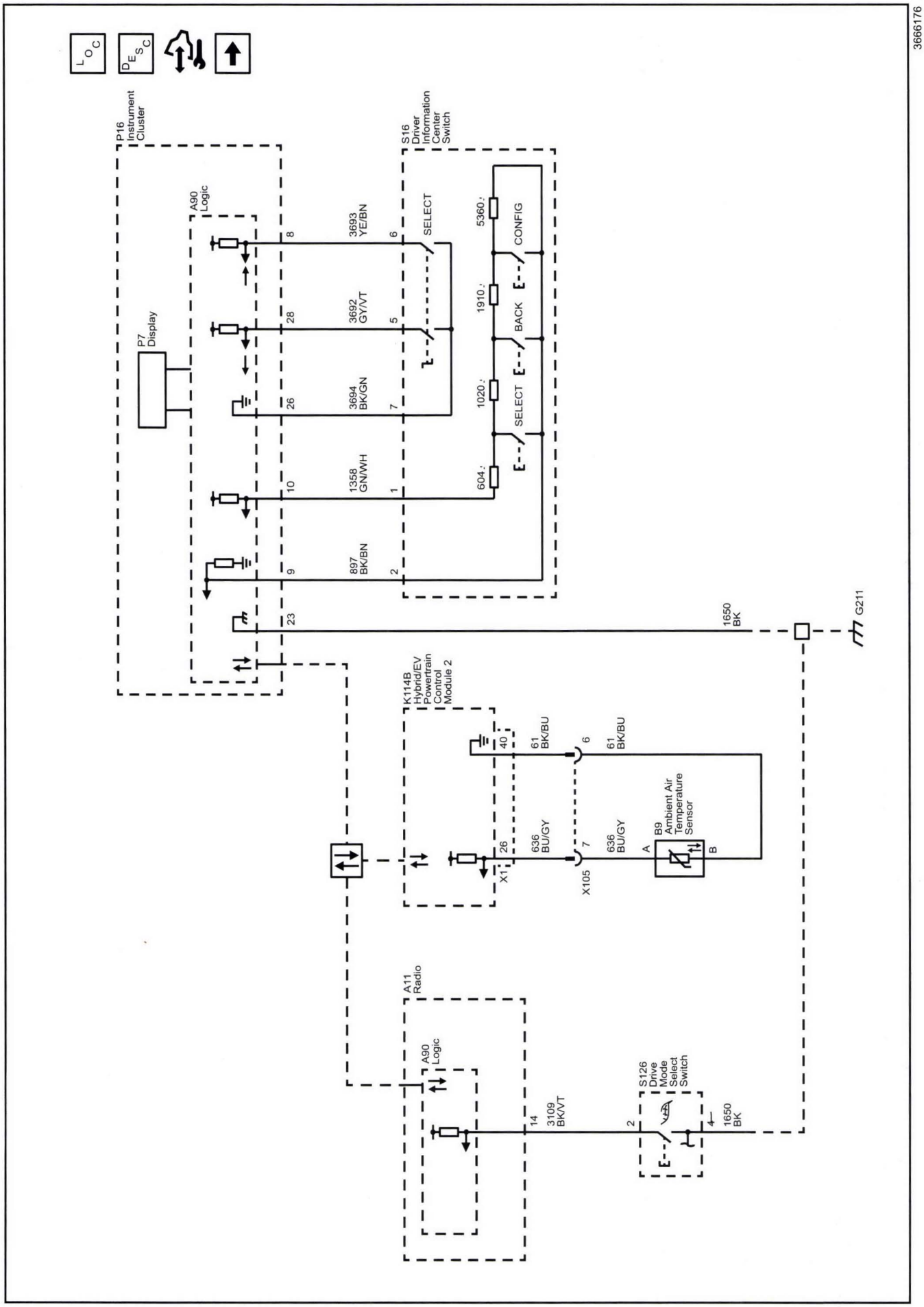

Driver Information System Schematics (Message Center)

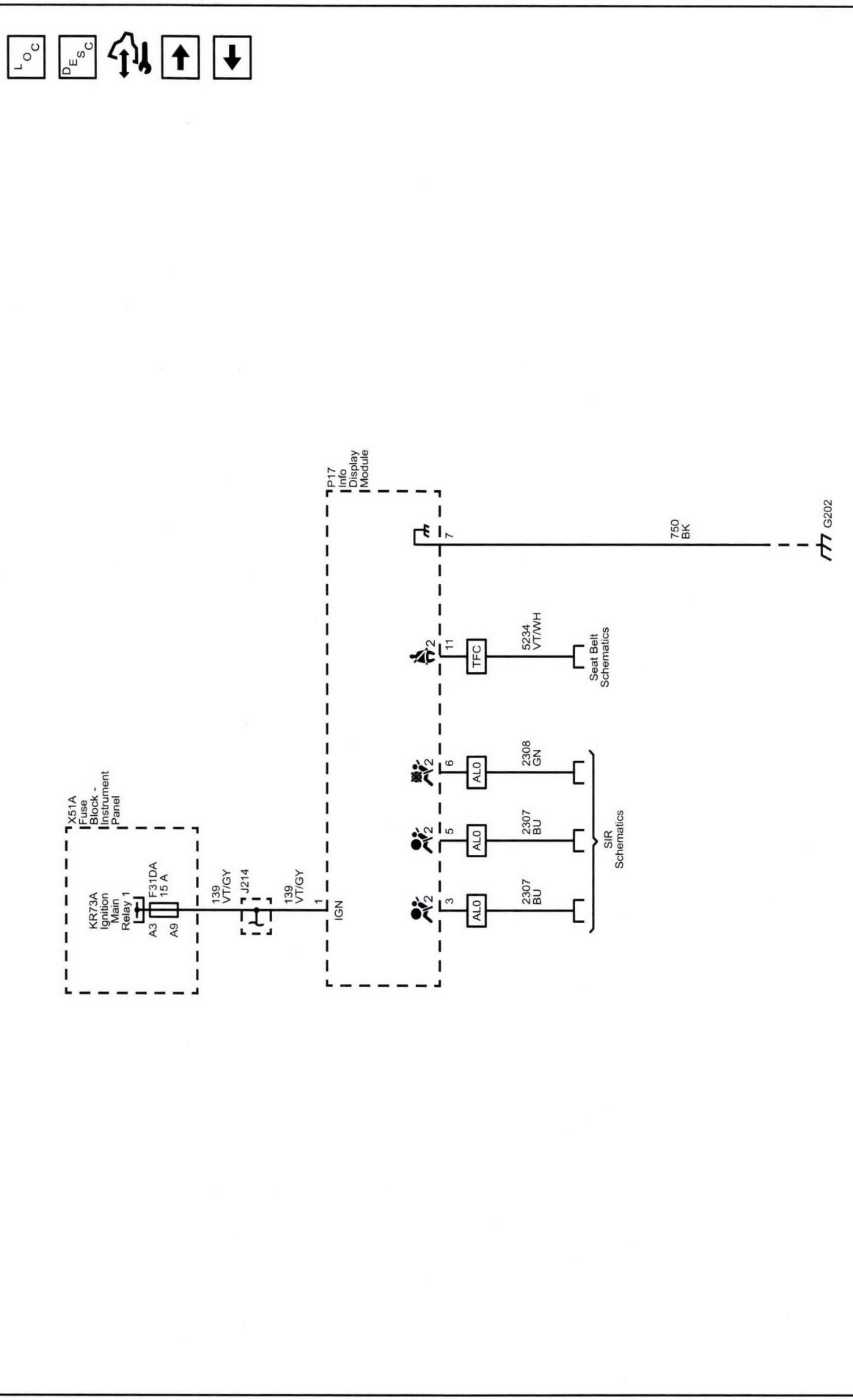

Audible Warnings Schematics (Audible Warnings)

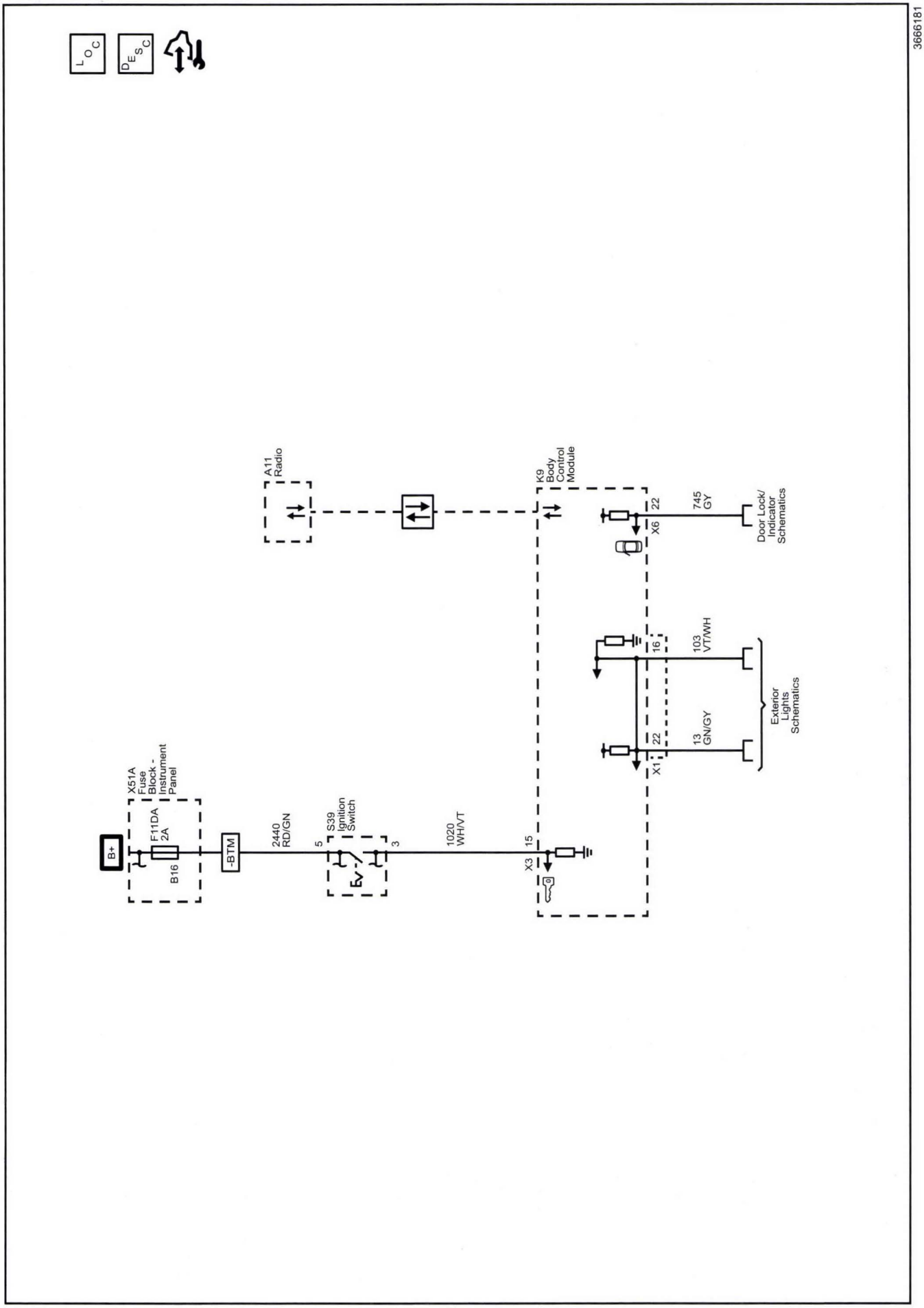

Diagnostic Information and Procedures

DTC B0158

Diagnostic Instructions

- Perform the *Diagnostic System Check - Vehicle on page 6-91* prior to using this diagnostic procedure.
- Review *Strategy Based Diagnosis on page 6-83* for an overview of the diagnostic approach.
- *Diagnostic Procedure Instructions on page 6-84* provides an overview of each diagnostic category.

DTC Descriptors

DTC B0158 02: Ambient Air Temperature Sensor Circuit Short to Ground
DTC B0158 05: Ambient Air Temperature Sensor Circuit High Voltage/Open

Diagnostic Fault Information

Circuit	Short to Ground	Open/High Resistance	Short to Voltage	Signal Performance
Ambient Air Temperature Sensor Signal	B0158 02	B0158 05	B0158 05	—
Low Reference	—	B0158 05	B0158 05	—

Circuit/System Description

The Hybrid Powertrain Control Module 2 monitors the ambient air temperature sensor with a low reference circuit and 5 V signal circuit. The Hybrid Powertrain Control Module 2 monitors the voltage drop across the sensor, which is proportional to temperature. When the ambient air temperatures are cold, the resistance of the sensor is high and the voltage signals are high. When the ambient air temperatures are hot, the resistance of the sensors is low and the voltage signals are low. The Hybrid Powertrain Control Module 2 sends the ambient air temperature signal to the Instrument Cluster via serial data. The Instrument Cluster displays the temperature on the driver information center.

Conditions for Running the DTC

The system voltage is between 9–16 V.

Conditions for Setting the DTC

B0158 02

The instrument cluster detects the sensor signal circuit is more than 88°C (190°F).

B0158 05

The instrument cluster detects the sensor signal circuit is less than −40°C (−40°F).

Action Taken When the DTC Sets

The Instrument Cluster uses a default air temperature value for further calculations. The driver information center displays no ambient air temperature information.

Conditions for Clearing the DTC

The DTC will become history if the instrument cluster no longer detects a malfunction.

Reference Information

Schematic Reference

Driver Information System Schematics on page 8-78

Connector End View Reference

Component Connector End Views on page 11-455

Description and Operation

- *Instrument Cluster Description and Operation on page 8-101*
- *Driver Information Center (DIC) Description and Operation on page 8-100*

Electrical Information Reference

- *Circuit Testing on page 11-871*
- *Connector Repairs on page 11-895*
- *Testing for Intermittent Conditions and Poor Connections on page 11-877*
- *Wiring Repairs on page 11-883*

Scan Tool Reference

Control Module References on page 6-3 for scan tool information

Circuit/System Verification

1. Vehicle in Service Mode.
2. Verify no other Instrument Cluster or Hybrid Powertrain Control Module 2 DTCs are present.

⇒ **If other DTCs are present**

Refer to *Diagnostic Trouble Code (DTC) List - Vehicle on page 6-92*

⇓ **If no other DTCs are present**

3. Verify the Instrument Cluster scan tool Ambient Air Temperature parameter between −40°C (−40°F) to +88°C (+190°F) and changes with air temperature changes.

⇒ **If parameter is not between −40°C (−40°F) to +88°C (+190°F) or does not change with air temperature changes**

Replace the P16 Instrument Cluster.

⇓ **If parameter is between −40°C (−40°F) to +88°C (+190°F) and changes with air temperature changes**

4. Verify the Hybrid Powertrain Control Module 2 scan tool Ambient Air Temperature parameter between −40°C (−40°F) to +88°C (+190°F) and changes with air temperature changes.

⇒ **If parameter is not between −40°C (−40°F) to +88°C (+190°F) or changes with air temperature changes**

Refer to Circuit/System Testing.

⇓ **If parameter is between −40°C (−40°F) to +88°C (+190°F) and changes with air temperature changes**

5. All OK.

Circuit/System Testing

Note: Circuit/System Verification must be performed before proceeding with Circuit/System Testing.

1. Vehicle OFF and all vehicle systems OFF, disconnect the harness connector at the B9 Ambient Air Temperature Sensor. It may take up to 2 minutes for all vehicle systems to power down.
2. Test for less than 10 Ω between the low reference circuit terminal B and ground.

⇒ **If 10 Ω or greater**

2.1. Disconnect the harness connector at the K114B Hybrid/EV Powertrain Control Module 2.

2.2. Test for less than 2 Ω in the low reference circuit end to end.

⇒ If 2 Ω or greater, repair the open/high resistance in the circuit.

⇒ If less than 2 Ω, replace the K114B Hybrid/EV Powertrain Control Module 2.

⇓ **If less than 10 Ω**

3. Vehicle in Service Mode.
4. Test for less than 1 V between the low reference circuit terminal B and ground.

⇒ **If 1 V or greater**

Repair the short to voltage on the circuit.

⇓ **If less than 1 V**

5. Verify the scan tool Ambient Air Temperature parameter is greater than 98%.

⇒ **If 98% or less**

5.1. Vehicle OFF, disconnect the harness connector at the K114B Hybrid/EV Powertrain Control Module 2.

5.2. Test for infinite resistance between the signal circuit and ground.

⇒ If less than infinite resistance, repair the short to ground on the circuit.

⇒ If infinite resistance, replace the K114B Hybrid/EV Powertrain Control Module 2.

⇓ **If greater than 98%**

6. Install a 3 A fused jumper wire between the signal circuit terminal A and the low reference circuit terminal B.
7. Verify the scan tool Ambient Air Temperature parameter is less than 8%.

⇒ **If 8% or greater**

7.1. Vehicle OFF, disconnect the harness connector at the K114B Hybrid/EV Powertrain Control Module 2, vehicle in Service Mode.

7.2. Test for less than 1 V between the signal circuit and ground.

⇒ If 1 V or greater, repair the short to voltage on the circuit.

⇓ If less than 1 V

7.3. Test for less than 2 Ω in the signal circuit end to end.

⇒ If 2 Ω or greater, repair the open/high resistance in the circuit.

⇒ If less than 2 Ω, replace the K114B Hybrid/EV Powertrain Control Module 2.

⇓ **If less than 8%**

8. Test or replace the B9 Ambient Air Temperature Sensor.

Component Testing

Static Test

1. Test the B9 Ambient Air Temperature Sensor by varying the sensor temperature while monitoring the sensor resistance.
2. Compare the readings with the *Ambient Air Temperature Sensor Resistance on page 8-76*

⇒ **If not within the specified range**

Replace the B9 Ambient Air Temperature Sensor.

⇓ **If within specified range**

3. All OK.

Repair Instructions

Perform the *Diagnostic Repair Verification on page 6-123* after completing the repair.

- *Control Module References on page 6-3* for module replacement, programming, and setup

DTC B0550

Diagnostic Instructions

- Perform the *Diagnostic System Check - Vehicle on page 6-91* prior to using this diagnostic procedure.
- Review *Strategy Based Diagnosis on page 6-83* for an overview of the diagnostic approach.
- *Diagnostic Procedure Instructions on page 6-84* provides an overview of each diagnostic category.

DTC Descriptor

DTC B0550 32: Odometer Circuit General Memory Malfunction

Circuit/System Description

The instrument cluster is equipped with odometers that indicate the distance traveled by the vehicle. One type of odometer is the season odometer where the traveled distance can not be reset by the driver. This information is also stored in the body control module (BCM). In addition to storing the season odometer value for the vehicle, the instrument cluster and the BCM store the VIN. Software checks are performed to ensure these modules, and their stored season odometer information, can not be moved or transferred between different vehicles.

Conditions for Running the DTC

The vehicle is ON.

Conditions for Setting the DTC

The BCM has detected an internal memory malfunction.

Action Taken When the DTC Sets

DTC B0550 32 is stored in the BCM memory.

Conditions for Clearing the DTC

The BCM no longer detects a malfunction.

Reference Information

Schematic Reference

Instrument Cluster Schematics on page 8-77

Connector End View Reference

Component Connector End Views on page 11-455

Description and Operation

Driver Information Center (DIC) Description and Operation on page 8-100

Electrical Information Reference

- *Circuit Testing on page 11-871*
- *Connector Repairs on page 11-895*
- *Testing for Intermittent Conditions and Poor Connections on page 11-877*
- *Wiring Repairs on page 11-883*

Scan Tool Reference

Control Module References on page 6-3 for scan tool information

Circuit/System Verification

1. Vehicle in Service Mode.
2. Verify DTC B0550 32 is not set.

⇒ **If DTC B0550 32 is set**

2.1. Program the K9 Body Control Module.

2.2. Verify the DTC does not set.

⇒ If the DTC sets, replace the K9 Body Control Module

⇓ If the DTC does not set

2.3. All OK.

⇓ **If DTC B0550 32 is not set**

3. All OK

Repair Instructions

Perform the *Diagnostic Repair Verification on page 6-123* after completing the repair.

Control Module References on page 6-3 for BCM replacement, programming and setup

DTC B124F

Diagnostic Instructions

- Perform the *Diagnostic System Check - Vehicle on page 6-91* prior to using this diagnostic procedure.
- Review *Strategy Based Diagnosis on page 6-83* for an overview of the diagnostic approach.
- *Diagnostic Procedure Instructions on page 6-84* provides an overview of each diagnostic category.

DTC Descriptor

DTC B124F 41: MOST Programming Failure Files Not Available
DTC B124F 42: MOST Programming Failure Not Programmed
DTC B124F 44: MOST Programming Failure Security Access Not Activated
DTC B124F 4A: MOST Programming Failure Security Checksum Error

Circuit/System Description

The instrument cluster can communicate with other devices on a Media Oriented Systems Transport (MOST) protocol and through the USB port. Software checks are performed to ensure the internal MOST circuitry is operating properly.

Conditions for Running the DTC

The Vehicle is ON or in Service Mode.

Conditions for Setting the DTC

The Instrument Cluster has detected an internal memory malfunction.

Action Taken When the DTC Sets

The DTC is stored in the Instrument Cluster memory.

Conditions for Clearing the DTC

The Instrument Cluster no longer detects a malfunction.

Reference Information

Schematic Reference

Instrument Cluster Schematics on page 8-77

Connector End View Reference

Component Connector End Views on page 11-455

Description and Operation

Instrument Cluster Description and Operation on page 8-101

Electrical Information Reference

- *Circuit Testing on page 11-871*
- *Connector Repairs on page 11-895*
- *Testing for Intermittent Conditions and Poor Connections on page 11-877*
- *Wiring Repairs on page 11-883*

Scan Tool Reference

Control Module References on page 6-3 for scan tool information

Circuit/System Verification

1. Vehicle in Service Mode.
2. Verify DTC B124F is not set.

⇒ **If the DTC is set**

2.1. Program the P16 Instrument Cluster.
2.2. Verify the DTC is not set.

⇒ If the DTC is set, replace P16 Instrument Cluster.

⇓ If the DTC is not set

2.3. All OK.

⇓ **If the DTC is not set**

3. All OK

Repair Instructions

Perform the *Diagnostic Repair Verification on page 6-123* after completing the repair.

Control Module References on page 6-3 for Instrument Cluster replacement, programming and setup

Symptoms - Displays and Gauges

Note: The following steps must be completed before using the symptom diagnostic tables.

1. Before using the symptom diagnostic tables, perform the *Diagnostic System Check - Vehicle on page 6-91*.
2. Review the system operation in order to understand the system functions. Refer to the following description and operations:
   - *Instrument Cluster Description and Operation on page 8-101*
   - *Indicator/Warning Message Description and Operation on page 8-100*
   - *Driver Information Center (DIC) Description and Operation on page 8-100*
   - *Audible Warnings Description and Operation on page 8-98*

Visual/Physical Inspection

- Inspect for aftermarket devices which can affect the operation of the instrument panel cluster or the audible warning systems. Refer to *Checking Aftermarket Accessories on page 11-871*.
- Inspect the accessible system components or the visible system components for obvious damage or for obvious conditions which can cause the symptom.
- Inspect for the proper fluid levels.

Intermittent

Faulty electrical connections or wiring may be the cause of intermittent conditions. Refer to *Testing for Intermittent Conditions and Poor Connections on page 11-877*.

Symptom List

Refer to a symptom diagnostic procedure from the following list in order to diagnose the symptom:

Gauges and Odometer

- *Instrument Cluster Display Malfunction on page 8-88*
- *Instrument Cluster Gauges Malfunction on page 8-87*
- *Speedometer and/or Odometer Malfunction on page 8-90*

Indicators

- *Leaf Button Malfunction on page 8-89*

Driver Information Center

Driver Information Center Switch Malfunction - DTC B3567 on page 8-86

Audible Warnings

Chime Malfunction on page 8-85

Chime Malfunction

Diagnostic Instructions

- Perform the *Diagnostic System Check - Vehicle on page 6-91* prior to using this diagnostic procedure.
- Review *Strategy Based Diagnosis on page 6-83* for an overview of the diagnostic approach.
- *Diagnostic Procedure Instructions on page 6-84* provides an overview of each diagnostic category.

Circuit/System Description

The radio generates the audible warnings. The instrument cluster, the body control module (BCM), the inflatable restraint sensing and diagnostic module (SDM) or the object alarm module request audible warnings via Low Speed CAN-Bus signals.

Reference Information

Schematic Reference

Audible Warnings Schematics on page 8-80

Connector End View Reference

Component Connector End Views on page 11-455

Description and Operation

Audible Warnings Description and Operation on page 8-98

Electrical Information Reference

- *Circuit Testing on page 11-871*
- *Connector Repairs on page 11-895*
- *Testing for Intermittent Conditions and Poor Connections on page 11-877*
- *Wiring Repairs on page 11-883*

Scan Tool Reference

Control Module References on page 6-3 for scan tool information

Circuit/System Verification

Note: Before performing this diagnostics, make sure no indicators are illuminated after the instrument cluster performs a lamp test. If any indicators are illuminated after the bulb test, perform the indicator diagnostics before this diagnostics.

1. Vehicle in Service Mode.
2. Verify all the radio speakers operate by adjust the radio balance and fade to each speaker.

⇒ **If any speaker does not operate properly**

Refer to *Speaker Malfunction on page 8-49*.

⇓ **If the speakers operate properly**

3. Verify the scan tool Driver Seat Belt Status and Passenger Seat Belt Status parameters are Buckled when both front seat belts are buckled.

⇒ **If not Buckled**

Refer to *Seat Belt Indicator Malfunction - Driver on page 12-87*.

⇓ **If buckled**

4. Verify the scan tool Headlamp On Switch parameter is Inactive when the headlamps are OFF.

⇒ **If not Inactive**

Refer to *Headlamps Malfunction on page 4-150*.

⇓ **If Inactive**

5. Verify the scan tool Park Lamps Switch parameter is Inactive when the park lamp switch is OFF.

⇒ **If not Inactive**

Refer to *Park, License, and/or Tail Lamps Malfunction on page 4-160*.

⇓ **If Inactive**

6. Verify the scan tool Left Turn Signal Switch and Right Turn Signal Switch parameters are Inactive while the turn signal switch is OFF.

⇒ **If not Inactive**

Refer to *Turn Signal Lamps and/or Indicators Malfunction on page 4-167*.

⇓ **If Inactive**

7. Verify the scan tool Park Brake Switch parameter is Inactive when the park brake is OFF.

⇒ **If not Inactive**

Refer to *Park Brake System Diagnosis on page 5-245*.

⇓ **If Inactive**

8. Verify that all scan tool parameters listed below are Inactive when all the doors are closed.
   - Driver Door Ajar Switch
   - Passenger Door Ajar Switch
   - Left Rear Door Ajar Switch
   - Right Rear Door Ajar Switch

⇒ **If not Inactive**

Refer to *Door Ajar Indicator Malfunction on page 4-240*.

⇓ **If Inactive**

9. All OK

Repair Instructions

Perform the *Diagnostic Repair Verification on page 6-123* after completing the repair.

Control Module References on page 6-3 for BCM or Radio replacement, programming and setup

---

Driver Information Center Switch Malfunction - DTC B3567

Diagnostic Instructions

- Perform the *Diagnostic System Check - Vehicle on page 6-91* prior to using this diagnostic procedure.
- Review *Strategy Based Diagnosis on page 6-83* for an overview of the diagnostic approach.
- *Diagnostic Procedure Instructions on page 6-84* provides an overview of each diagnostic category.

DTC Descriptors

DTC B3567 01: Info Display Select Switch Circuit Short to Battery
DTC B3567 02: Info Display Select Switch Circuit Short to Ground
DTC B3567 04: Info Display Select Switch Circuit Open
DTC B3567 59: Info Display Select Switch Circuit Protection Time-Out

Circuit/System Description

The driver information center switch is a multiplexed switch. The Select, Back, and Config buttons are a series of momentary contact switches that connect a series of resistors in a resistor ladder format. The Select, Back, and Config buttons utilize a 12 V signal and the instrument cluster determines which button is pressed by the voltage drop across the resistors when the button is pressed.

Conditions for Running the DTC

- The ignition is in OFF, ACCESSORY or RUN position.
- The system voltage is between 9–16 V.

Conditions for Setting the DTC

B3567 01

The instrument cluster detects that the driver information center switch signal circuit is shorted to battery.

B3567 02

The instrument cluster detects that the driver information center switch signal circuit is shorted to ground.

B3567 04

The instrument cluster detects that the driver information center switch signal circuit is open.

B3567 59

The instrument cluster detects that the driver information center switch is stuck.

Action Taken When the DTC Sets

The instrument cluster ignores the driver information center switch inputs.

Conditions for Clearing the DTC

The DTC will become history if the instrument cluster no longer detects a malfunction.

Reference Information

Schematic Reference

Instrument Cluster Schematics on page 8-77

Connector End View Reference

Component Connector End Views on page 11-455

Description and Operation

Driver Information Center (DIC) Description and Operation on page 8-100

Electrical Information Reference

- *Circuit Testing on page 11-871*
- *Connector Repairs on page 11-895*
- *Testing for Intermittent Conditions and Poor Connections on page 11-877*
- *Wiring Repairs on page 11-883*

Scan Tool Reference

Control Module References on page 6-3 for scan tool information

Circuit/System Verification

1. Vehicle in Service Mode.
2. Verify the driver information center functions changes when pressing the Select, Back, and Config switch.

⇒ **If the driver information center does not change**

Refer to Circuit/System Testing.

⇓ **If the driver information center changes**

3. All OK.

Circuit/System Testing

Note: Circuit/System Verification must be performed before proceeding with Circuit/System Testing.

1. Vehicle OFF, disconnect the harness connector at the S16 driver information center switch.
2. Test for less than 10 Ω between the low reference circuit terminal 2 and ground.

⇒ **If 10 Ω or greater**

2.1. Ignition OFF, disconnect the harness connector at the P16 Instrument Cluster.

2.2. Test for less than 2 Ω in the low reference circuit end to end.

⇒ If 2 Ω or greater, repair the open/high resistance in the circuit.

⇒ If less than 2 Ω, replace the P16 Instrument Cluster.

⇓ **If less than 10 Ω**

3. Vehicle ON.
4. Test for less than 1 V between the low reference circuit terminal 2 and ground.

⇒ If 1 V or greater, repair the short to voltage on the circuit.

⇓ If less than 1 V

5. Test for 10–12 V between the signal S16 Driver Information Center Switch signal circuit terminal 1 and ground.

⇒ **If less than 10 V**

5.1. Ignition OFF, disconnect the harness connector at the P16 Instrument Cluster.

5.2. Test for infinite resistance between the signal circuit and ground.

⇒ If less than infinite resistance, repair the short to ground on the circuit.

⇓ If infinite resistance

5.3. Test for less than 2 Ω in the signal circuit end to end.

⇒ If 2 Ω or greater, repair the open/high resistance in the circuit.

⇒ If less than 2 Ω, replace the P16 Instrument Cluster.

⇒ **If greater than 12 V**

5.1. Ignition OFF, disconnect the harness connector at the P16 Instrument Cluster, ignition ON.

5.2. Test for less than 1 V between the signal circuit and ground.

⇒ If 1 V or greater, repair the short to voltage on the circuit.

⇒ If less than 1 V, replace the P16 Instrument Cluster.

⇓ **If between 10–12 V**

6. Test or replace the S16 Driver Information Center Switch.

Repair Instructions

Perform the *Diagnostic Repair Verification on page 6-123* after completing the diagnostic procedure.

- *Driver Information Display Switch Replacement on page 8-93*
- *Control Module References on page 6-3* for instrument cluster replacement, programming and setup

Instrument Cluster Gauges Malfunction

Diagnostic Instructions

- Perform the *Diagnostic System Check - Vehicle on page 6-91* prior to using this diagnostic procedure.
- Review *Strategy Based Diagnosis on page 6-83* for an overview of the diagnostic approach.
- *Diagnostic Procedure Instructions on page 6-84* provides an overview of each diagnostic category.

Circuit/System Description

The instrument cluster displays vehicle information such as vehicle speed based on information from the engine control module (ECM). The ECM sends information via serial data to the body control module (BCM). The BCM then sends the information via serial

data to the instrument cluster to display the vehicle speed and the distance travelled, either in kilometers or miles, based on the vehicle requirements.

Reference Information

Schematic Reference

Instrument Cluster Schematics on page 8-77

Connector End View Reference

Component Connector End Views on page 11-455

Description and Operation

Instrument Cluster Description and Operation on page 8-101

Electrical Information Reference

- *Circuit Testing on page 11-871*
- *Connector Repairs on page 11-895*
- *Testing for Intermittent Conditions and Poor Connections on page 11-877*
- *Wiring Repairs on page 11-883*

Scan Tool Reference

Control Module References on page 6-3 for scan tool information

Circuit/System Verification

1. Vehicle in Service Mode.
2. Verify all gauge segments illuminate when performing the Driver Information Center Segments test with the scan tool.

⇒ **If any gauge segments do not illuminate**

Replace the P16 instrument cluster

⇓ **If all gauge segments illuminate**

3. Drive the vehicle.
4. Verify the gauge values match the values on the scan tool.

⇒ **If the values do not match**

Reprogram the P16 Instrument Cluster.

4.1. Drive the vehicle.

4.2. Verify the gauge values match the values on the scan tool.

⇒ If the values do not match

Replace the P16 Instrument Cluster.

⇓ **If the values match**

5. Replace the K20 Engine Control Module.

Repair Instructions

Perform the *Diagnostic Repair Verification on page 6-123* after completing the repair.

Control Module References on page 6-3 for Instrument Custer or ECM replacement, programming and setup

Instrument Cluster Display Malfunction

Diagnostic Instructions

- Perform the *Diagnostic System Check - Vehicle on page 6-91* prior to using this diagnostic procedure.
- Review *Strategy Based Diagnosis on page 6-83* for an overview of the diagnostic approach.
- *Diagnostic Procedure Instructions on page 6-84* provides an overview of each diagnostic category.

Circuit/System Description

The instrument cluster displays vehicle information like vehicle speed based on the information from the engine control module (ECM). The ECM sends information via serial data to the body control module (BCM). The BCM then sends the information via serial data to the instrument cluster to display vehicle speed and the distance travelled, either in kilometers or miles, based on the vehicle requirements.

Reference Information

Schematic Reference

Instrument Cluster Schematics on page 8-77

Connector End View Reference

Component Connector End Views on page 11-455

Description and Operation

Instrument Cluster Description and Operation on page 8-101

Electrical Information Reference

- *Circuit Testing on page 11-871*
- *Connector Repairs on page 11-895*
- *Testing for Intermittent Conditions and Poor Connections on page 11-877*
- *Wiring Repairs on page 11-883*

Scan Tool Reference

Control Module References on page 6-3 for scan tool information

Circuit/System Verification

1. Vehicle in Service Mode.
2. Verify all gauge segments illuminate when performing the Instrument Cluster Initialization test with the scan tool.

⇒ **If the instrument cluster does not perform the initialization test sequence**

Replace the P16 Instrument Cluster.

⇓ **If the instrument cluster performs the initialization test sequence**

3. Verify all segments illuminate White, Blue, Green, Red, Black and Off when performing the Driver Information Center Segments test with the scan tool.

⇒ **If any segments do not illuminate**

Replace the P16 Instrument Cluster.

⇓ **If all segments illuminate**

4. All OK.

Repair Instructions

Perform the *Diagnostic Repair Verification on page 6-123* after completing the repair.

Control Module References on page 6-3 for Instrument Cluster replacement, programming and setup

Leaf Button Malfunction

Diagnostic Instructions

- Perform the *Diagnostic System Check - Vehicle on page 6-91* prior to using this diagnostic procedure.
- Review *Strategy Based Diagnosis on page 6-83* for an overview of the diagnostic approach.
- *Diagnostic Procedure Instructions on page 6-84* provides an overview of each diagnostic category.

Circuit/System Description

The Leaf button is located in the Radio/HVAC Controls assembly and is used to change between the Power Flow, Charging, and Energy Information views of the Info Display Module.

The Radio/HVAC Controls provides 5 volts to the Leaf button. The Leaf button is a momentary contact switch that pulls the signal low to ground when pushed. When the Radio/HVAC Controls sees the Leaf button transition, it sends the request via serial data to the Info Display Module.

Reference Information

Schematic Reference

Driver Information System Schematics on page 8-78

Connector End View Reference

Component Connector End Views on page 11-455

Description and Operation

Driver Information Center (DIC) Description and Operation on page 8-100

Electrical Information Reference

- *Circuit Testing on page 11-871*
- *Connector Repairs on page 11-895*
- *Testing for Intermittent Conditions and Poor Connections on page 11-877*
- *Wiring Repairs on page 11-883*

Scan Tool Reference

Control Module References on page 6-3 for scan tool information

Circuit/System Verification

1. Vehicle ON.
2. Verify the Info Display Module display changes when pressing the Leaf button.

⇒ **If the Info Display Module display does not change**

Refer to Circuit/System Testing

⇓ **If the Info Display Module display changes**

3. All OK.

Circuit/System Testing

Note: Circuit/System Verification must be performed before proceeding with Circuit/System Testing.

1. Vehicle OFF, disconnect the harness connector at the S126 Drive Mode Select Switch, vehicle ON.
2. Test for 4.8–5.2 V between the signal circuit terminal 2 and ground.

⇒ **If less than 4.8 V**

2.1. Vehicle OFF, disconnect the harness connector at the A20 Radio/HVAC Controls.

2.2. Test for infinite resistance between the signal circuit and ground.

⇒ If less than infinite resistance, repair the short to ground on the circuit.

⇓ If infinite resistance

2.3. Test for less than 2 Ω in the signal circuit end to end.

⇒ If 2 Ω or greater, repair the open/high resistance in the circuit.

⇒ If less than 2 Ω, replace the A20 Radio/HVAC Controls.

⇒ **If greater than 5.2 V**

2.1. Vehicle OFF, disconnect the harness connector at the A20 Radio/HVAC Controls, vehicle ON.

2.2. Test for less than 1 V between the signal circuit and ground.

⇒ If 1 V or greater, repair the short to voltage on the circuit.

⇒ If less than 1 V, replace the A20 Radio/HVAC Controls.

⇓ **If between 4.8–5.2 V**

3. Test for less than 10 Ω between the ground circuit terminal 4 and ground.

⇒ **If 10 Ω or greater**

Repair the open/high resistance in the circuit

⇓ **If less than 10 Ω**

4. Replace the S126 Drive Mode Select Switch.

Repair Instructions

Perform the *Diagnostic Repair Verification on page 6-123* after completing the repair.

- *Control Module References on page 6-3* for the Radio/HVAC Controls or Drive Mode Select Switch (part of Radio/HVAC Controls) replacement, programming and setup

Speedometer and/or Odometer Malfunction

Diagnostic Instructions

- Perform the *Diagnostic System Check - Vehicle on page 6-91* prior to using this diagnostic procedure.
- Review *Strategy Based Diagnosis on page 6-83* for an overview of the diagnostic approach.
- *Diagnostic Procedure Instructions on page 6-84* provides an overview of each diagnostic category.

Circuit/System Description

The instrument cluster displays the engine coolant temperature, fuel level, vehicle speed and the engine speed based on the information from the engine control module (ECM). The ECM sends information via serial data to the body control module (BCM). The BCM then sends the information via serial data to the instrument cluster to display the engine coolant temperature, fuel level, the engine speed, the vehicle speed and the distance travelled, either in kilometers or miles, based on the vehicle requirements. The instrument cluster will display dashes when its VIN does not match the VIN received from the BCM.

Diagnostic Aids

If the VIN mismatch is corrected the odometer will once again be displayed in the instrument cluster. If the vehicle is driven for a calibrated distance with a VIN mismatch, it will cause the instrument cluster odometer to enter into an error mode and lock itself. When this occurs the dashes will remain on the display even after correcting the VIN mismatch. The vehicle odometer status data display on the scan tool can be used to identify a locked odometer. The only way to unlock the instrument cluster (clear the dashes from the display) is to perform an SPS programming event. Failure to follow the diagnostic and programming procedures may result in either an improper odometer value or a module replacement.

Reference Information

Schematic Reference

Instrument Cluster Schematics on page 8-77

Connector End View Reference

Component Connector End Views on page 11-455

Description and Operation

Instrument Cluster Description and Operation on page 8-101

Electrical Information Reference

- *Circuit Testing on page 11-871*
- *Connector Repairs on page 11-895*
- *Testing for Intermittent Conditions and Poor Connections on page 11-877*
- *Wiring Repairs on page 11-883*

Scan Tool Reference

Control Module References on page 6-3 for scan tool information

Circuit/System Verification

1. Vehicle in Service Mode.
2. Verify all gauge segments illuminate when performing the Driver Information Center Segments test with the scan tool.

⇒ **If any gauge segments do not illuminate**

Replace the P16 instrument cluster

⇓ **If all gauge segments illuminate**

3. Drive the vehicle.
4. Verify the displayed Instrument Cluster speedometer value matches the vehicle speed parameter on the scan tool.

⇒ **If the values do not match**

Replace the P16 Instrument Cluster.

⇓ **If the values match**

5. Verify the odometer display and the displayed distance counts up while driving the vehicle.

⇒ **If the odometer displays only "——" (dashes)**

Refer to Circuit/System Testing.

⇒ **If the odometer display does not count up**

Replace the P16 Instrument Cluster.

⇓ **If speedometer sweeps and displays the correct value, and the odometer display counts up**

6. All OK.

Circuit/System Testing

Note:

- Circuit/System Verification must be performed before proceeding with Circuit/System Testing.
- If there are multiple modules not original to the vehicle and are not new correctly configured service parts, SPS may not be able to proper read or recover the vehicle odometer value. Follow government rules and documentation (including vehicle identification) regarding inaccurate/ unknown odometer values.

Correcting VIN mismatch: Instrument Cluster is Showing "——" (Dashes) odometer is still unlocked

1. Verify the scan tool Odometer Status parameter is Unlocked.

⇒ **If the reading is Locked**

Refer to correcting VIN mismatch – odometer locked.

⇓ **If the reading is Unlocked**

2. Verify the scan tool BCM VIN parameter matches the vehicle's VIN placard.

⇒ **If the VIN does not match**

Reprogram the BCM, then proceed to Step 3.

⇓ **If the VIN matches**

3. Verify the scan tool Instrument Cluster VIN parameter matches the vehicle's VIN placard.

⇒ **If the VIN does not match**

Reprogram the instrument cluster. Then proceed with step 4.

⇓ **If the VIN matches**

4. Vehicle in Service Mode.
5. Verify the instrument cluster is displaying the correct value.

⇓ **If the instrument cluster is still displaying "——" (dashes)**

Replace the P16 Instrument Cluster.

6. All OK.

Correcting VIN mismatch: Instrument Cluster is Showing "——" (Dashes) odometer is locked

1. Verify the scan tool Odometer Status parameter is Locked.

⇒ **If the reading is Unlocked**

Refer to Correcting VIN mismatch – odometer unlocked.

⇓ **If the reading is Locked**

2. Verify the scan tool Instrument Cluster VIN parameter matches the vehicle's VIN placard.

⇒ **If the VIN does not match**

Reprogram the Instrument Cluster. Then proceed with step 3.

⇓ **If the VIN matches**

3. Perform the BCM setup procedure in SPS.
4. Vehicle in Service Mode.
5. Verify the instrument cluster is displaying the correct value.

⇒ **If the instrument cluster is still displaying "——" (dashes)**

Replace the P16 Instrument Cluster.

⇓ **If instrument cluster is displaying the correct value**

6. All OK.

Repair Instructions

Perform the *Diagnostic Repair Verification on page 6-123* after completing the repair.

Control Module References on page 6-3 for Instrument Cluster, BCM or ECM replacement, programming and setup

Repair Instructions

Ambient Air Temperature Gauge Sensor Replacement

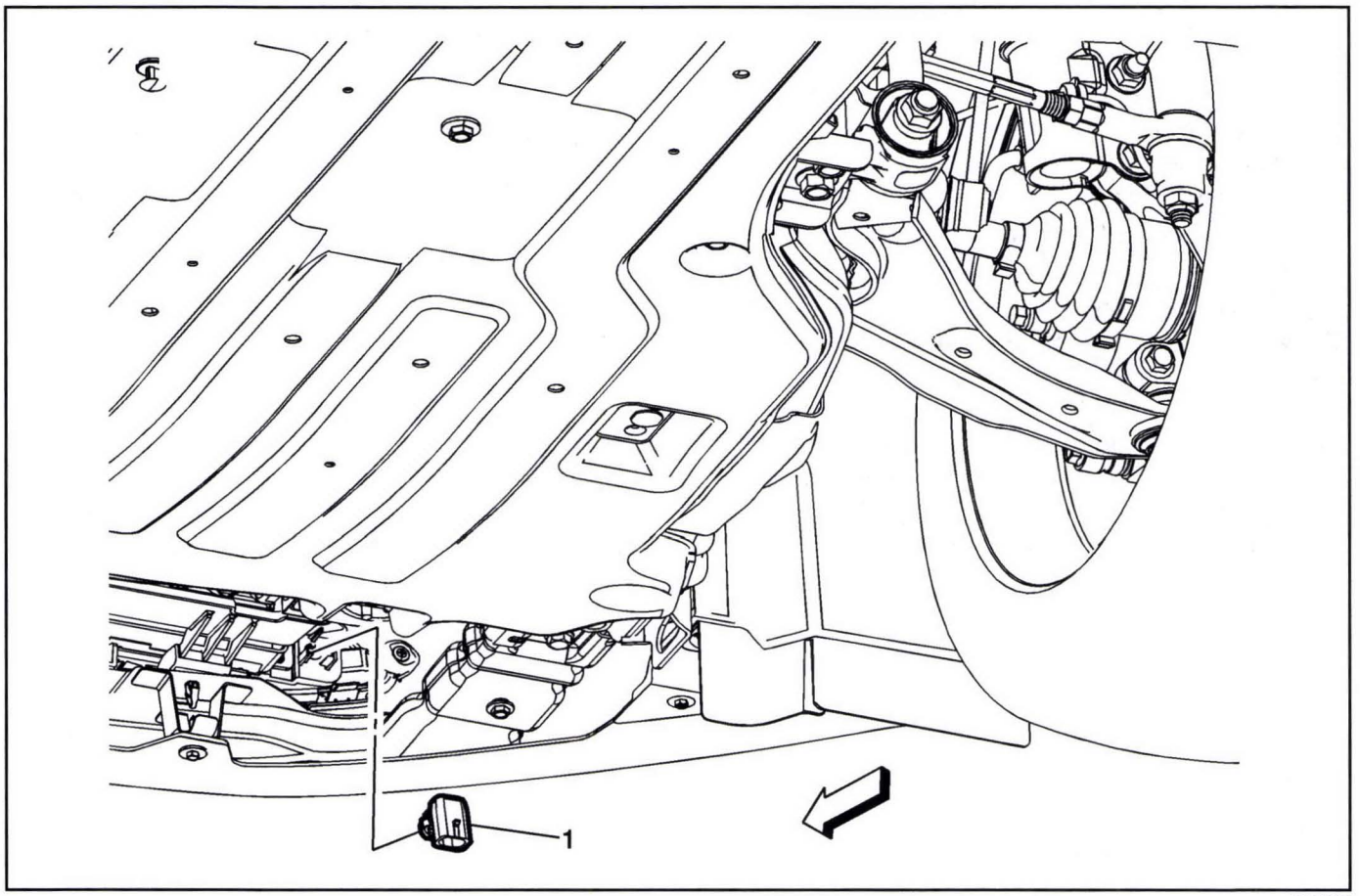

3211700

Ambient Air Temperature Gauge Sensor Replacement

Callout	Component Name
Preliminary Procedures 1. Lift the vehicle. Refer to *Lifting and Jacking the Vehicle on page 1-27*. 2. Remove the front compartment air deflector. Refer to *Front Compartment Air Deflector Replacement on page 3-125*.	
1	Ambient Air Temperature Gauge Sensor **Procedure** Disconnect the ambient air temperature gauge sensor connector.

Driver Information Display Switch Replacement

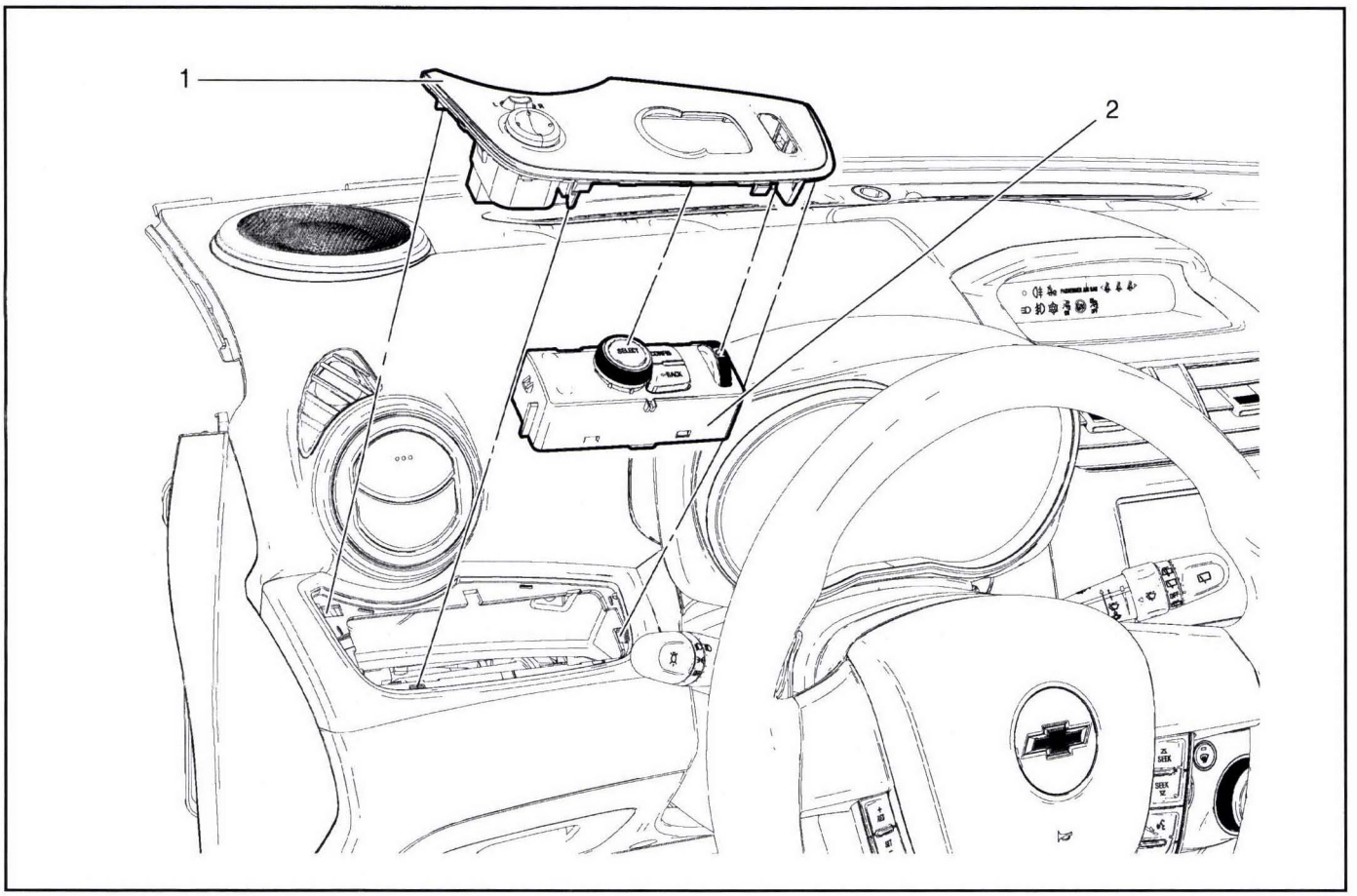

3417573

Driver Information Display Switch Replacement

Callout	Component Name
1	Outside Rearview Mirror Remote Control Switch **Procedure** 1. Disconnect the electrical connections. 2. Use a flat bladed plastic trim tool to aid in the removal from the instrument trim panel applique.
2	Driver Information Display Switch **Procedure** Release the tabs on the switch to remove from the outside rearview mirror control switch.

Information Center Telltale Assembly Replacement

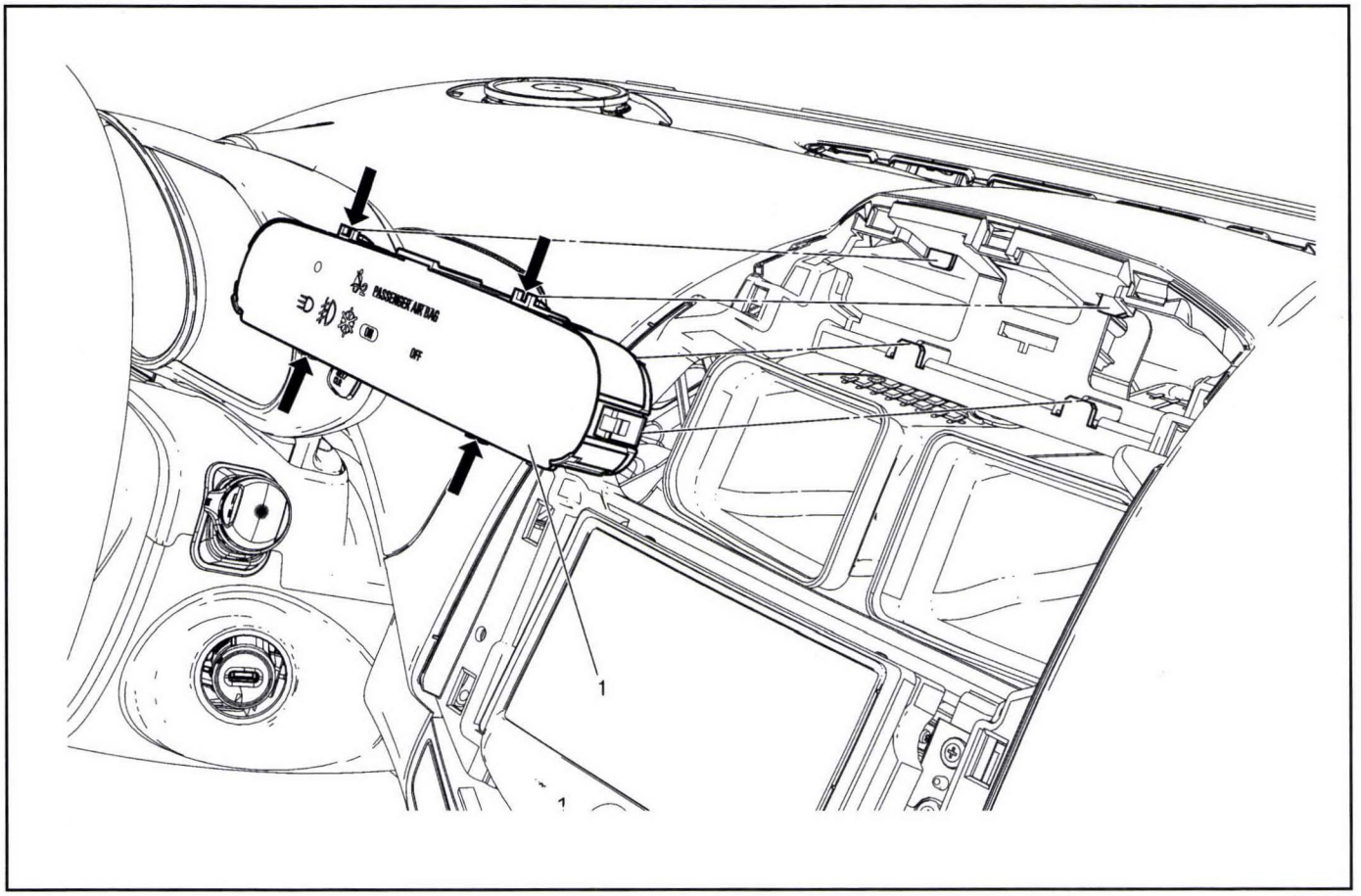

2754780

Information Center Telltale Assembly Replacement

Callout	Component Name
Preliminary Procedure Remove the instrument panel center trim plate applique. Refer to *Instrument Panel Center Trim Plate Applique Replacement on page 2-25*.	
1	Driver Information Center Telltale Assembly **Procedure** 1. Carefully disengage the retainer clips. 2. Disconnect electrical connection.

Instrument Cluster Replacement

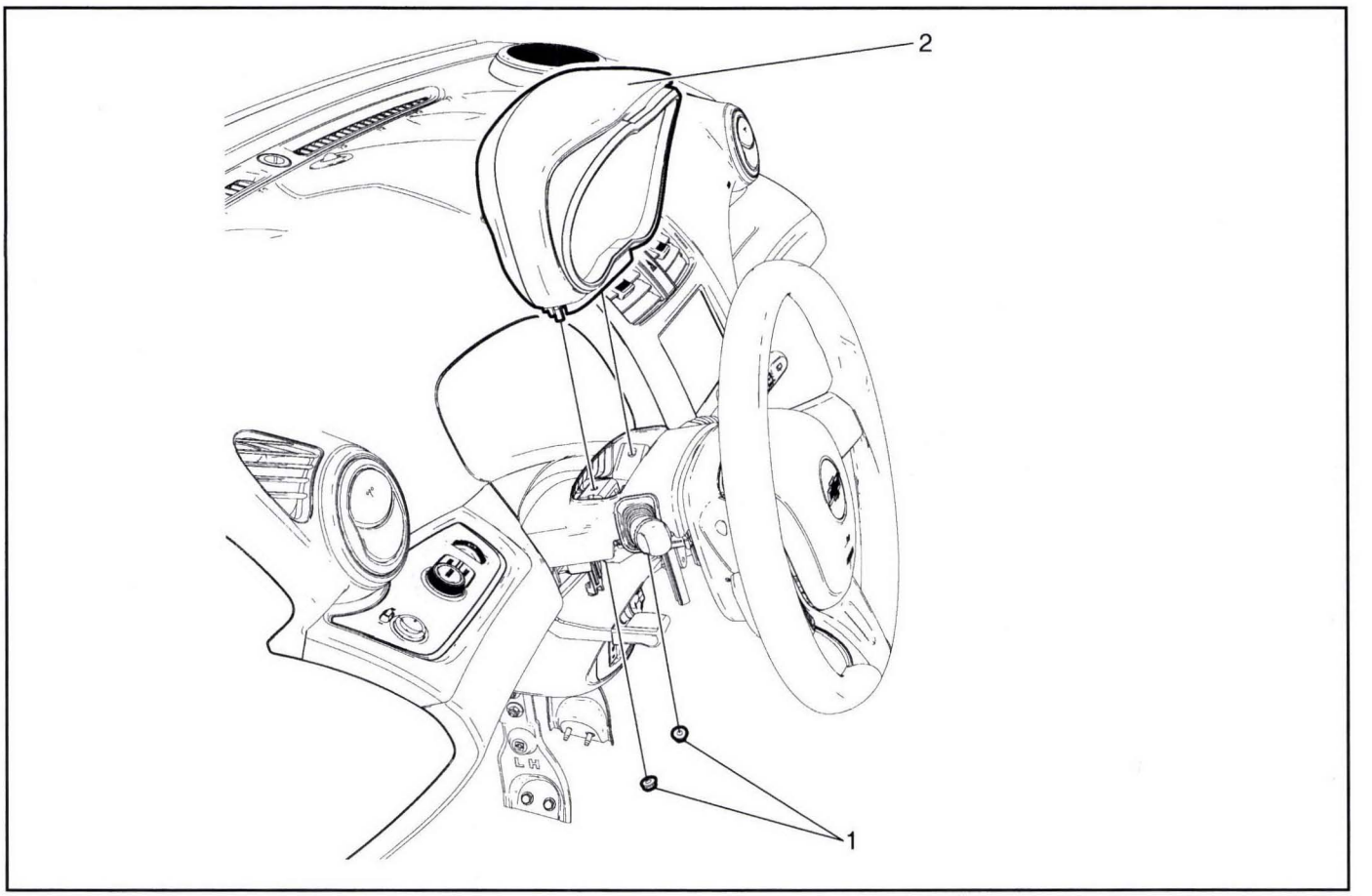

2963112

Instrument Cluster Replacement

Callout	Component Name
Preliminary Procedures 1. Remove the instrument cluster rear cover. Refer to *Instrument Cluster Rear Cover Replacement on page 8-96*. 2. Remove the steering column lower trim cover. Refer to *Steering Column Lower Trim Cover Replacement on page 14-30*.	
1	Instrument Cluster Nut (Qty: 2) **Caution:** Refer to *Fastener Caution on page 0-8*. **Tighten** 10 N•m (89 lb in)
2	Instrument Cluster **Procedure** 1. Disconnect the electrical connector. 2. Refer to *Control Module References on page 6-3* for programming and set up information.

Instrument Cluster Rear Cover Replacement

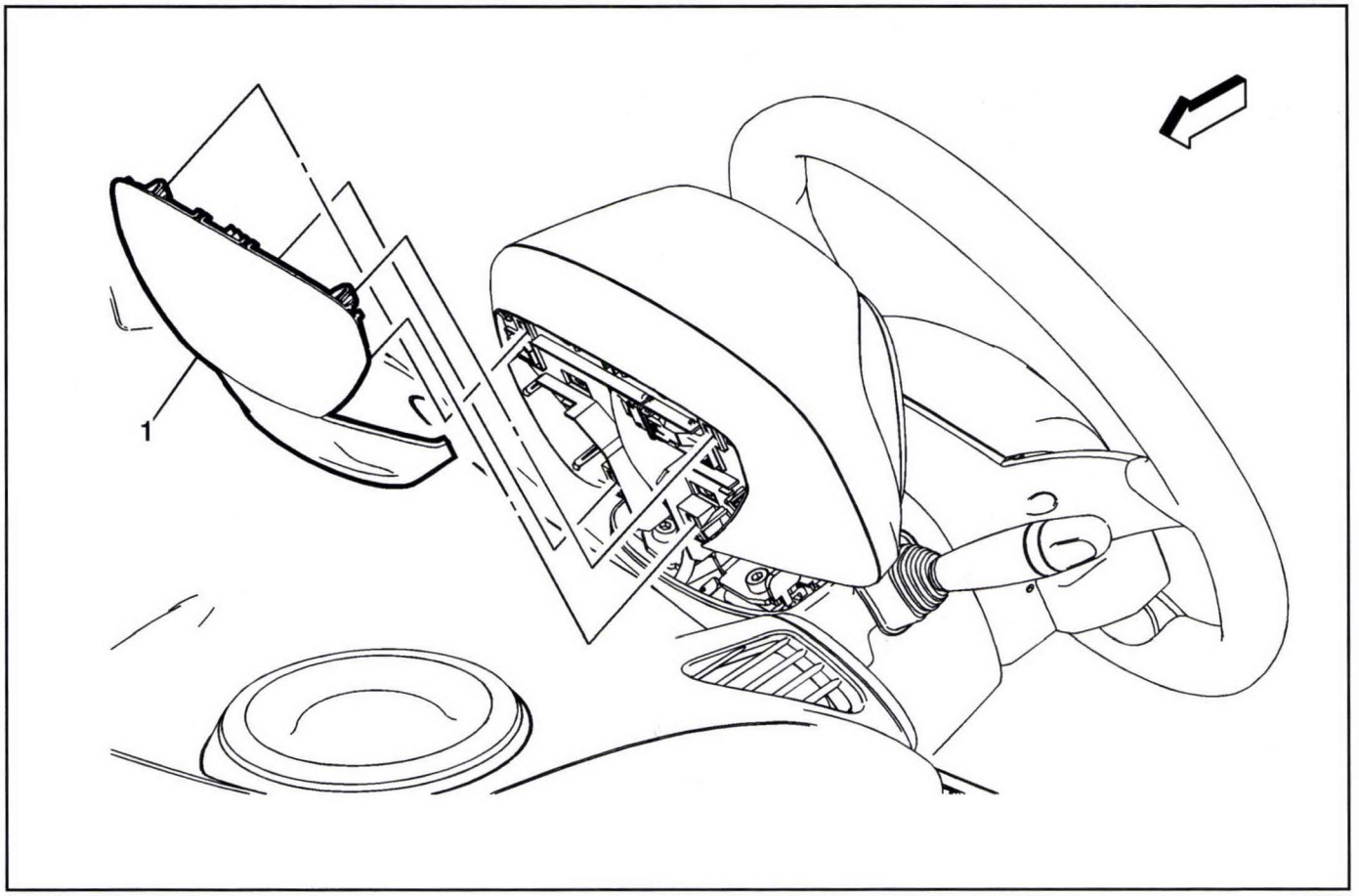

2963109

Instrument Cluster Rear Cover Replacement

Callout	Component Name
1	Instrument Cluster Rear Cover **Procedure** Use a flat bladed plastic trim tool to aid in the removal of the rear cover from the instrument cluster assembly.

Battery Charge Indicator Replacement

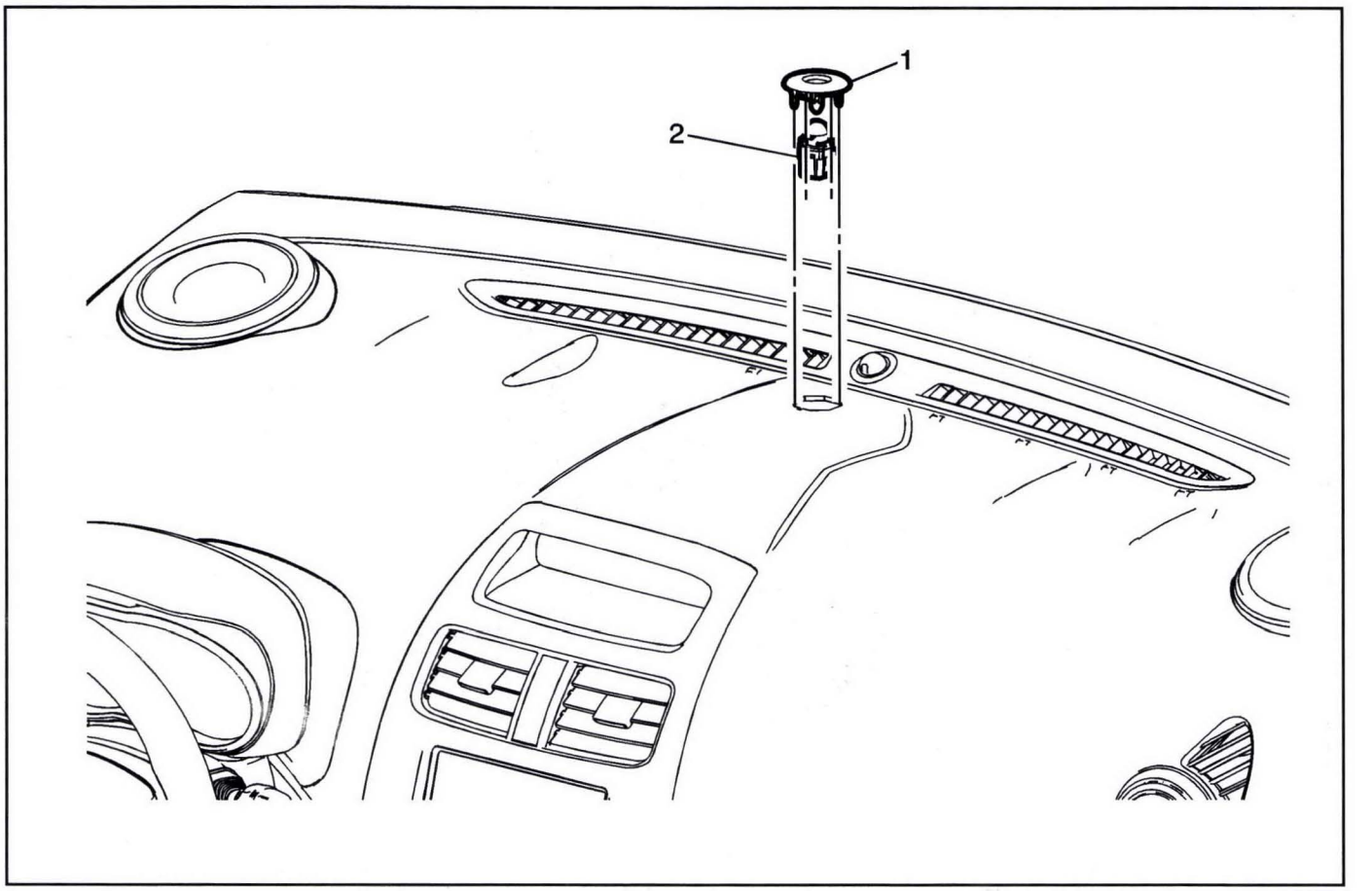

3213931

Battery Charge Indicator Replacement

Callout	Component Name
1	Electronic Suspension Switch Bezel **Procedure** Using a small flat bladed tool, gently disengage tabs on bezel.
2	Battery Charge Indicator **Procedure** 1. Twist indicator to release from bezel. 2. Disconnect electrical connector.

Fuel Economy Switch Replacement

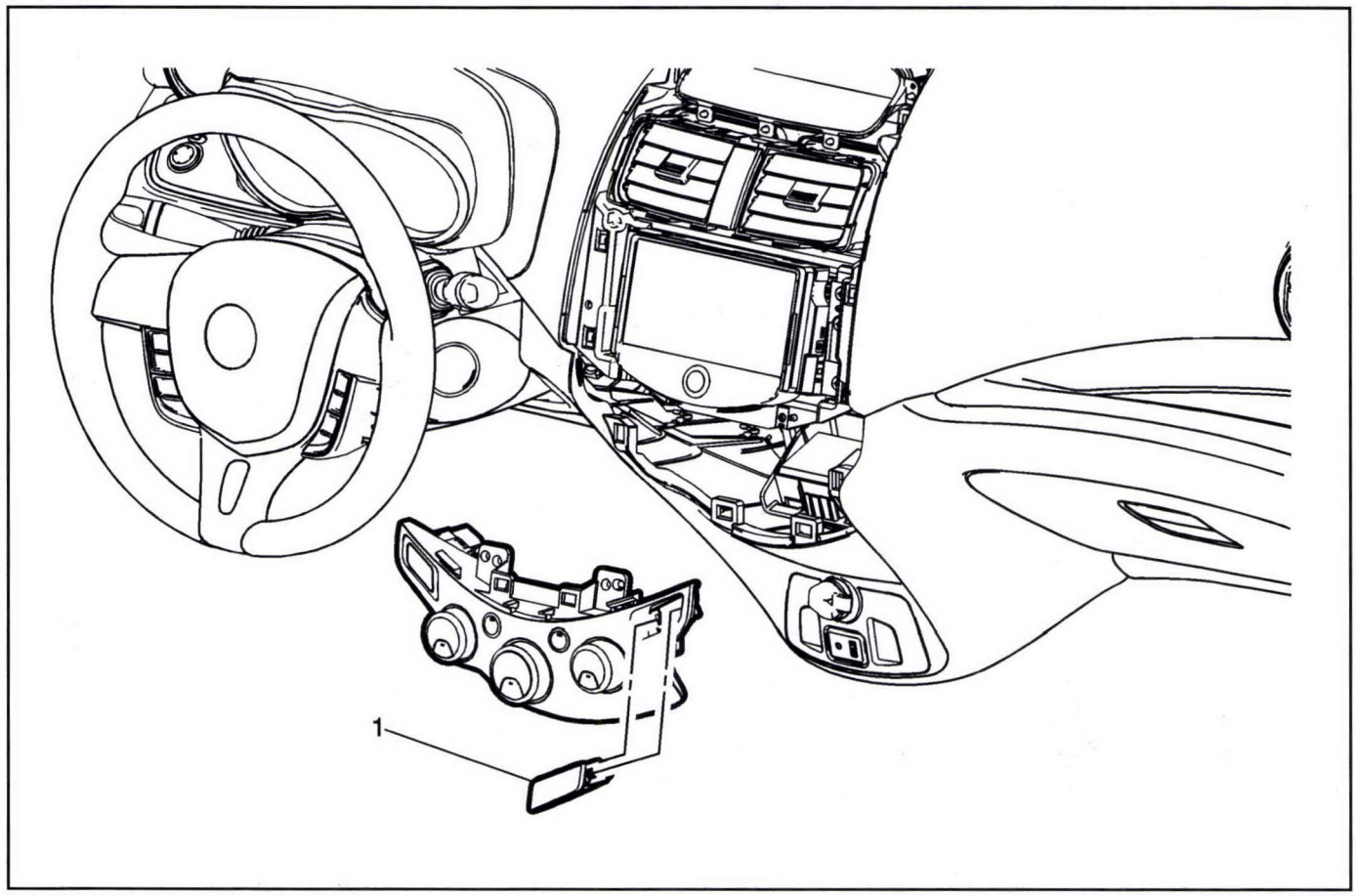

3212613

Fuel Economy Switch Replacement

Callout	Component Name
Preliminary Procedure Remove the auxiliary heater and air conditioning control. Refer to *Auxiliary Heater and Air Conditioning Control Replacement on page 10-135.*	
1	Fuel Economy Indicator Switch **Procedure** Depress tabs on switch to remove from the control.

Description and Operation

Audible Warnings Description and Operation

The audible warnings alert the driver of a system concern or a critical vehicle condition. The radio generates the audible warnings through the speakers. The radio receives audible warning requests via the serial data circuit. If the radio receives multiple audible warning requests, the warning with the highest priority sounds first. On vehicles without a radio, a chime module generates the audible warnings and receives audible warning requests via the serial data circuit.

Either the radio or the chime module is the chime producer. The following lists the audible warning sounds:

1. Single pulse gong
2. Multiple pulse gong
3. Single pulse beep
4. Multiple pulse beep
5. Click
6. Clack

Auto Stop Mode

The chime producer activates when the vehicle comes to a stop (vehicle is running and engine is off) and the driver or passenger door is opened as requested by the body control module.

Fasten Safety Belt Warning

The chime producer activates the fasten safety belt audible warning as requested by the body control module (BCM). The BCM sends a serial data message to the chime producer indicating the chime as a multiple gong. The fasten safety belt warning sounds and the fasten safety belt indicator illuminates when the following occurs:

- The ignition switch transitions to ON.
- The inflatable restraint sensing and diagnostic module (SDM) detects that the drivers seat belt is not buckled and the signal is low. The SDM sends a serial data message to the BCM indicating the seat belt status. The instrument cluster receives a serial data message from the BCM indicating the driver seat belt status.

If the seat belt is buckled when the ignition is turned ON, the chime does not sound. If the seat belt is buckled while the chime is sounding, the chime stops. If the seat belt is unbuckled after the initial transition to ON, the chime does not sound.

Lights On Warning

The chime producer activates the lights on warning as requested by the BCM. The BCM sends a serial data message to the chime producer indicating the chime as a multiple gong. The lights on warning sounds when the following occurs:

- The ignition is OFF.
- The BCM determines that the driver door is open and the signal circuit is low.
- The BCM determines that the headlamp switch is in the park or head position.

Brake Warning

The chime producer activates the brake audible warning as requested by multiple control modules. The BCM, electronic brake control module or the parking brake control module sends a serial data message to the chime producer indicating the chime as a multiple gong. The brake warning sounds and the BRAKE indicator illuminates when the following occurs:

- The ignition is ON.
- The vehicle speed is greater than 8 km/h (4.9 mph). The instrument cluster receives a serial data message from the engine control module (ECM) indicating the vehicle speed.
- The BCM determines that the parking brake is engaged and the signal circuit is low.
- The brake fluid is low.

Door Ajar Warning

The chime producer activates the door ajar audible warning as requested by the BCM. The BCM sends a serial data message to the chime producer indicating the chime frequency of a medium rate and continuous duration. The door ajar warning sounds and the appropriate door ajar indicator illuminates in the driver information center when the following occurs:

- The BCM determines that a door (driver door, passenger door, left rear door, right rear door) is open and the signal circuit is low. The instrument cluster also receives a serial data message from the BCM indicating the door ajar status.
- The vehicle is not in PARK. The BCM receives a serial data message from the ECM/BCM indicating the gear position.

Object Detection

The chime producer activates the object detection audible warning as requested by the object alarm module. When an object is within the measuring range of the sensor, the ultrasonic pulse is reflected and is received by the sending or a neighboring sensor. The sensor converts this signal into a voltage signal and sends this signal to the object alarm module. The object alarm module evaluates the received sensor signals. As soon as an object is within the measuring range, the object alarm module sends a message via CAN-Bus to the chime producer in order to give out the acoustic distance signal. The measuring range is between 30–120 cm (11.81–47.24 in). From a distance of 120 cm (47.24 in), the acoustic signal is active. The frequency of the beep sound increases with decreasing distance. From a distance less than 30 cm (11.81 in), the sound becomes continuous.

Additional Warnings

The following warnings have an associated instrument cluster indicator or driver information center message:

- Turn Signal Indicators – The chime producer activates the audible warning as requested by the BCM. The chime produces two different chimes, one when the turn signal turns off and another when the turn signal turns on.
- Vehicle Overspeed Message – The chime producer activates the audible warning as requested by the BCM. The BCM sends a serial data message to the chime producer.
- Fuel Level Low Message – The chime producer activates the audible warning as requested by the BCM. The BCM sends a serial data message to the chime producer.
- Oil Pressure Indicator – The chime producer activates the audible warning as requested by the BCM. The BCM sends a serial data message to the chime producer.
- Park Assist Fault Clean Rear Bumper Message – The chime producer activates the audible warning as requested by the BCM. The BCM sends a serial data message to the chime producer.
- Tire Pressure Low Indicator – The chime producer activates the audible warning as requested by the BCM. The BCM sends a serial data message to the chime producer.

Refer to *Indicator/Warning Message Description and Operation on page 8-100*.

Driver Information Center (DIC) Description and Operation

The Driver Information Center display is in the instrument cluster. The Driver Information Center displays information about the vehicle. It also displays warning messages if a system problem is detected. For more information on Indicators and Warning messages, refer to *Indicator/Warning Message Description and Operation on page 8-100*.

There are 3 switch functions for the driver information center:

- CONFIG: Press to select either the Simple or Enhanced instrument cluster configuration display.
- BACK: Press to return to the previous screen, exit a screen, or return to the main menu. Press BACK to minimize the DIC menu display.
- SELECT: Press the center of the knob to select the highlighted item. Turn the knob to scroll through the menu items.

Menu

Turn the SELECT knob to scroll through the possible menus. Press the center of the SELECT knob when a menu is highlighted to enter that menu. The possible Driver Information Center menu's are:

- Trip A
- Trip B
- Tire Pressure
- Vehicle Messages
- Units
- Tutorial Mode

Trip A and Trip B

The trip displays show fuel used and distance traveled since the last trip reset.

Reset the trip data by pressing and holding the SELECT button when either Trip A or Trip B is displayed.

Outside Air Temperature

The outside air temperature can be accessed through the driver information center Trip/Fuel switch function. The driver information center shows the outside air temperature as a damped value. The time and rate of the temperature update is based on an algorithm in the instrument cluster. Factors such as last temperature reading, current temperature reading, length of time the vehicle was off, current vehicle speed, and the distance driven effect when the displayed temperature is updated. To get the vehicle to display the most accurate temperature faster, drive the vehicle. Constant moving traffic will update the display to the correct temperature more quickly than stop and go traffic.

Tire Pressure

The display will show a vehicle with the approximate pressures of all four tires. Tire pressure is displayed in either kilopascal (kPa) or in pounds per square inch (psi).

If a low or high tire pressure is detected, a message is displayed advising to check the tire pressure in the specified tire.

Vehicle Messages

Turn the SELECT knob to scroll through any active warning messages. Press SELECT to review the messages.

Units

Turn the SELECT knob to change the unit display to METRIC or US when the display is active. Press SELECT to confirm the setting. This will change the displays on the cluster and DIC to either metric or English (US) measurements.

Tutorial Mode

Select this menu item to view a screen that explains some of the unique features of the cluster.

Language

The driver information center is capable of displaying in different languages, corresponding to the radio language settings. The instrument cluster receives a GMLAN message with language information from the radio. This message is only sent one time, after a new language is selected. To set the language, see the owners manual.

Indicator/Warning Message Description and Operation

Indicator LIGHT ON

Refer to the owner's manual for the descriptions and explanations of all indicator lights.

For diagnosis and repair information related to an indicator light, refer to the System Diagnosis and the Description of Operation that the message relates to.

Message Displayed

Refer to the owner's manual for descriptions and explanations of all messages displayed.

For diagnosis and repair information related to a displayed message, refer to the System Diagnosis and the Description of Operation that the message relates to.

CHANGE TIMING BELT MESSAGE

The Instrument Cluster monitors the odometer mileage to determine when timing belt (if equipped) replacement may be necessary. After the vehicle has accumulated approximately 100,000 miles (160,000 kilometers), the Instrument Cluster may display the CHANGE TIMING BELT message. After the engine timing belt has been replaced, reset the CHANGE TIMING BELT message by locating and removing the fuses that supply power to the Instrument Cluster for two minutes.

Transmission Shift Lever Position Indicator

The Transmission Shift Lever Position Indicator (if equipped) is located on the center console and indicates the current transmission shift lever position. The Transmission Shift Lever Position Indicator receives power and ground and is controlled by the Body Control Module (BCM) via serial data. The Transmission Control Module determines transmission

shift lever position based on signals from the Transmission Internal Mode Switch and sends the shift lever position information to the BCM via serial data.

Instrument Cluster Description and Operation

Displays Test

The instrument cluster displays a preview of information that includes electric range, charging, odometer, and battery status. This happens when the driver door is first opened, and following the welcome animation before starting the vehicle.

A CHARGING OVERRIDE/INTERRUPTION OCCURRED message may display on the lower left of the screen to indicate that a charging override or interruption has occurred due to:

- Override of charging settings by vehicle owner via OnStar.
- Unintended interruption of AC power at the vehicle's charge port.
- Interruption of charging by the utility company via OnStar as authorized by vehicle owner.

Refer to the owners manual for a complete list of vehicle charging status screen messages.

Indicators and Warning Messages

Refer to *Indicator/Warning Message Description and Operation on page 8-100*.

Battery and Driver Efficiency Gauges

Refer to the owner's manual for descriptions and explanations of Battery and Driver Efficiency Gauges.

Speedometer

The instrument cluster displays the vehicle speed based on the information from the ECM. The ECM sends the vehicle speed information via a High Speed CAN-Bus signal to the BCM. The BCM then sends the vehicle speed information via a Low Speed CAN-Bus signal to the instrument cluster in order to display the vehicle speed, either in kilometers or miles, based on the vehicle requirements. The speedometer defaults to 0 km/h (0 MPH) if:

- The BCM detects a loss of serial data communications with the ECM.
- The instrument cluster detects a loss of serial data communications with the BCM.

Odometer

The instrument cluster displays the vehicle odometer in the driver information center. The ECM send a distance rolling count message on GMLAN to the body control module (BCM). The BCM uses this information to calculate the vehicle odometer. This odometer value is then sent to the instrument cluster on GMLAN. The instrument cluster does not calculate the odometer. The odometer displays miles or kilometers as selected in the Units menu.

The odometer value is stored in multiple modules. The instrument cluster is a secondary storage module for the odometer, while the BCM is the primary storage and accumulator.

In addition to storing the odometer value for the vehicle, the instrument cluster and the BCM store the VIN. Software checks are performed to ensure these modules, and their stored odometer information, can not be move or transferred between different vehicles.

If the VINs do not match, the instrument cluster will go into an error mode and display "——" (dashes). If the VIN mismatch exists over a calibrated distance, the instrument cluster will "lock" the odometer display and only show dashes, even if the VIN mismatch is subsequently correct. The only way to clear or "unlock" the instrument cluster is to perform a BCM programming event using SPS.

Compass

The vehicle may have a compass display on the Driver Information Center. The compass receives its heading and other information from the Global Positioning System (GPS) antenna. If applicable, the GPS antenna is located with the telematics communication interface control module.

Driver Information Center Display

In the lower middle of the instrument cluster, an additional display is installed. Its task is to give additional information, such as an odometer or error codes. This part of the instrument cluster is available in 4 different variants, mostly depending on the assembled engine. For further information refer to *Driver Information Center (DIC) Description and Operation on page 8-100*.

Secondary and Configurable Customer Controls

Schematic and Routing Diagrams

Steering Wheel Secondary/Configurable Control Schematics (Steering Wheel Secondary/Configurable Control)

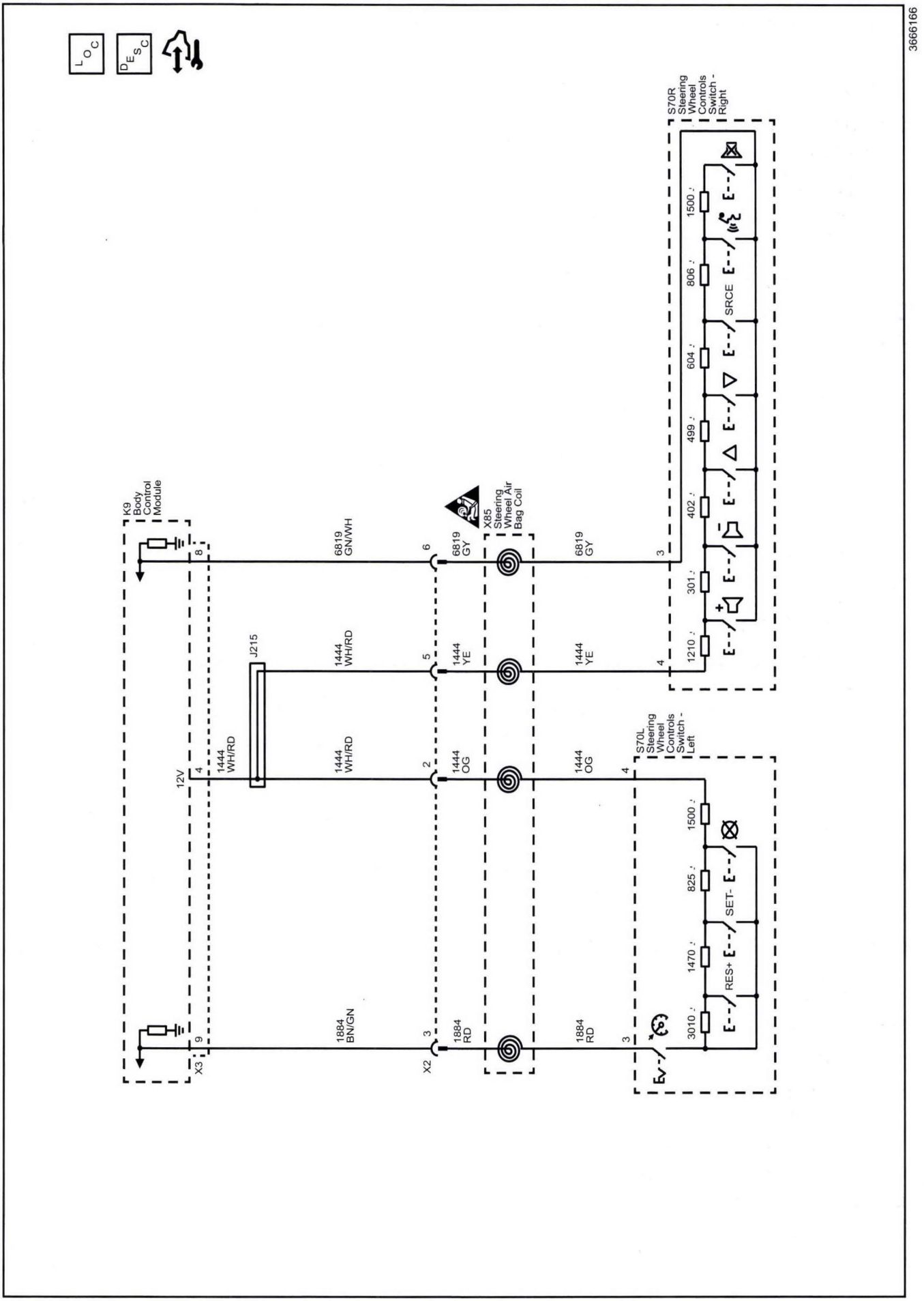

Diagnostic Information and Procedures

DTC B1405

Diagnostic Instructions

- Perform the *Diagnostic System Check - Vehicle on page 6-91* prior to using this diagnostic procedure.
- Review *Strategy Based Diagnosis on page 6-83* for an overview of the diagnostic approach.
- *Diagnostic Procedure Instructions on page 6-84* provides an overview of each diagnostic category.

DTC Descriptors

DTC B1405: Control Module Voltage Reference Output 2 Circuit

For symptom byte information refer to *Symptom Byte List on page 6-117*.

Diagnostic Fault Information

Electrical DTCs

Circuit	Short to Ground	Open/High Resistance	Short to Voltage	Signal Performance
12 V Reference	B1529 03, B1405 03	1	B1529 07	B1529 07
Signal	1	1	B3622 07	—
1. Steering Wheel Controls Inoperative				

Circuit/System Description

The body control module (BCM) monitors the system voltage to make sure that the voltage stays within the proper range. Damage to components and/or incorrect operation can occur when the voltage is out of range.

Conditions for Running the DTC

- Battery voltage is between 9–16 V.
- Vehicle in Service Mode.

Conditions for Setting the DTC

The BCM detects a low/high voltage on the control circuit.

Conditions for Clearing the DTC

- The condition responsible for setting the DTC no longer exists.

Reference Information

Schematic Reference

Steering Wheel Secondary/Configurable Control Schematics on page 8-103

Connector End View Reference

Component Connector End Views on page 11-455

Description and Operation

Steering Wheel Controls Description and Operation on page 8-112

Electrical Information Reference

- *Circuit Testing on page 11-871*
- *Connector Repairs on page 11-895*
- *Testing for Intermittent Conditions and Poor Connections on page 11-877*
- *Wiring Repairs on page 11-883*

Scan Tool Reference

Control Module References on page 6-3 for scan tool information

Circuit/System Testing

1. Vehicle OFF and all vehicle systems OFF, disconnect the harness connector at the S70R Steering Wheel Controls Switch – Right, vehicle ON.
2. Test for 11.8–12.2 V between the reference voltage circuit terminal 4 and ground.

⇒ **If less than 11.8 V**

2.1. Vehicle OFF, disconnect the harness connector at the K9 body control module.

2.2. Test for infinite resistance between the reference voltage circuit and ground.

⇒ If less than infinite resistance, repair the short to ground on the circuit.

⇓ If infinite resistance

2.3. Test for less than 2 Ω in the reference voltage circuit end to end.

⇒ If 2 Ω or greater, repair the open/high resistance in the circuit.

⇒ If less than 2 Ω, replace the K9 body control module.

⇒ **If greater than 12.2 V**

2.1. Vehicle OFF, disconnect the harness connector at the K9 body control module, vehicle ON.

2.2. Test for less than 1 V between the reference voltage circuit and ground.

⇒ If 1 V or greater, repair the short to voltage on the circuit.

⇒ If less than 1 V, replace the K9 body control module.

⇓ **If between 11.8–12.2 V**

3. Test for 11.8–12.2 V between the reference voltage circuit terminal 4 and signal circuit terminal 3.

⇒ **If not between 11.8–12.2 V**

3.1. Vehicle OFF, disconnect the harness connector at the K9 body control module.

3.2. Test for less than 1 V between the signal circuit and ground.

⇒ If 1 V or greater, repair the short to voltage on the circuit.

⇓ If less than 1 V

3.3. Test for less than 2 Ω in the signal circuit end to end.

⇒ If 2 Ω or greater, repair the open/high resistance in the circuit.

⇒ If less than 2 Ω replace the K9 body control module.

⇓ **If between 11.8–12.2 V**

4. Vehicle OFF, disconnect the harness connector at the K9 body control module.
5. Test for infinite resistance between the signal circuit terminal 3 and ground.

⇒ **If less than infinite resistance**

Repair the short to ground on the circuit.

⇓ **If infinite resistance**

6. Test or replace the S70R Steering Wheel Controls Switch – Right.

Component Testing

1. Vehicle OFF, disconnect the harness connector at the S70R Steering Wheel Controls Switch – Right.
2. Test the resistance between the signal terminal 3 and the reference voltage terminal 4 while pressing the appropriate steering wheel controls switch button listed below:

⇒ **If not the specified value**

Replace the S70R Steering Wheel Controls Switch – Right.

⇓ **If the specified value**

3. All OK

Function Switch	Minimum Resistance Value	Maximum Resistance Value
Hang Up-Mute	5.0 kΩ	5.5 kΩ
Telephone Switch	3.6 kΩ	4 kΩ
Arrow Down	2.2 kΩ	2.6 kΩ
Arrow Up	1.7 kΩ	2 kΩ
Volume Down	1.4 kΩ	1.6 kΩ
Volume Up	1.1 kΩ	1.3 kΩ
No Switch Pressed	Infinite	Infinite

Repair Instructions

Perform the *Diagnostic Repair Verification on page 6-123* after completing the repair.

Control Module References on page 6-3 for BCM replacement, programming and setup

DTC B1529

Diagnostic Instructions

- Perform the *Diagnostic System Check - Vehicle on page 6-91* prior to using this diagnostic procedure.
- Review *Strategy Based Diagnosis on page 6-83* for an overview of the diagnostic approach.
- *Diagnostic Procedure Instructions on page 6-84* provides an overview of each diagnostic category.

DTC Descriptors

DTC B1529: Control Module Voltage Reference Output 5 Circuit

For symptom byte information refer to *Symptom Byte List on page 6-117*.

Diagnostic Fault Information

Electrical DTCs

Circuit	Short to Ground	Open/High Resistance	Short to Voltage	Signal Performance
12 V Reference	B1529 03, B1405 03	1	B1529 07	B1529 07
Signal	1	1	B3622 07	—
1. Steering Wheel Controls Inoperative				

Circuit/System Description

The body control module (BCM) supplies voltage to the steering wheel control switches and monitors the return signal. Each switch state is associated to a set resistance value and when pressed a specific voltage drop occurs across the resistor unique to the switch. The BCM identifies the switch selection and activates the feature.

Conditions for Running the DTC

- The system voltage is between 9–16 V.
- Vehicle ON.

Conditions for Setting the DTC

B1529 03

- The BCM detects a short to ground in the 12 V reference circuit.
- The above condition is present for greater than 30 seconds.

B1529 07

- The BCM detects a short to voltage in the 12 V reference circuit.
- The above condition is present for greater than 30 seconds.

Action Taken When the DTC Sets

The BCM will ignore switch inputs.

Conditions for Clearing the DTC

- The condition responsible for setting the DTC no longer exists.

Reference Information

Schematic Reference

Steering Wheel Secondary/Configurable Control Schematics on page 8-103

Connector End View Reference

Component Connector End Views on page 11-455

Description and Operation

Steering Wheel Controls Description and Operation on page 8-112

Electrical Information Reference

- *Circuit Testing on page 11-871*
- *Connector Repairs on page 11-895*
- *Testing for Intermittent Conditions and Poor Connections on page 11-877*
- *Wiring Repairs on page 11-883*

Scan Tool Reference

Control Module References on page 6-3 for scan tool information

Circuit/System Testing

1. Vehicle OFF and all vehicle systems OFF, disconnect the harness connector at the S70R Steering Wheel Controls Switch – Right, Vehicle in Service Mode.
2. Test for 11.8–12.2 V between the reference voltage circuit terminal 4 and ground.

⇒ **If less than 11.8 V**

2.1. Vehicle OFF, disconnect the harness connector at the K9 body control module.

2.2. Test for infinite resistance between the reference voltage circuit and ground.

⇒ If less than infinite resistance, repair the short to ground on the circuit.

⇓ If infinite resistance

2.3. Test for less than 2 Ω in the reference voltage circuit end to end.

⇒ If 2 Ω or greater, repair the open/high resistance in the circuit.

⇒ If less than 2 Ω, replace the K9 body control module.

⇒ **If greater than 12.2 V**

2.1. Vehicle OFF, disconnect the harness connector at the K9 body control module, Vehicle in Service Mode.

2.2. Test for less than 1 V between the reference voltage circuit and ground.

⇒ If 1 V or greater, repair the short to voltage on the circuit.

⇒ If less than 1 V, replace the K9 body control module.

⇓ **If between 11.8–12.2 V**

3. Test for 11.8–12.2 V between the reference voltage circuit terminal 4 and signal circuit terminal 3.

⇒ **If not between 11.8–12.2 V**

3.1. Vehicle OFF, disconnect the harness connector at the K9 body control module.

3.2. Test for less than 1 V between the signal circuit and ground.

⇒ If 1 V or greater, repair the short to voltage on the circuit.

⇓ If less than 1 V

3.3. Test for less than 2 Ω in the signal circuit end to end.

⇒ If 2 Ω or greater, repair the open/high resistance in the circuit.

⇒ If less than 2 Ω replace the K9 body control module.

⇓ **If between 11.8–12.2 V**

4. Vehicle OFF, disconnect the harness connector at the K9 body control module.
5. Test for infinite resistance between the signal circuit terminal 3 and ground.

⇒ **If less than infinite resistance**

Repair the short to ground on the circuit.

⇓ **If infinite resistance**

6. Test or replace the S70R Steering Wheel Controls Switch – Right.

Component Testing

1. Vehicle OFF, disconnect the harness connector at the S70R Steering Wheel Controls Switch – Right.
2. Test the resistance between the signal terminal 3 and the reference voltage terminal 4 while pressing the appropriate steering wheel controls switch button listed below:

⇒ **If not the specified value**

Replace the S70R Steering Wheel Controls Switch – Right.

⇓ **If the specified value**

3. All OK

Function Switch	Minimum Resistance Value	Maximum Resistance Value
Hang Up-Mute	5.0 kΩ	5.5 kΩ
Telephone Switch	3.6 kΩ	4 kΩ
Arrow Down	2.2 kΩ	2.6 kΩ
Arrow Up	1.7 kΩ	2 kΩ
Volume Down	1.4 kΩ	1.6 kΩ
Volume Up	1.1 kΩ	1.3 kΩ
No Switch Pressed	Infinite	Infinite

Repair Instructions

Perform the *Diagnostic Repair Verification on page 6-123* after completing the repair.

Control Module References on page 6-3 for BCM replacement, programming and setup

DTC B3622

Diagnostic Instructions

- Perform the *Diagnostic System Check - Vehicle on page 6-91* prior to using this diagnostic procedure.
- Review *Strategy Based Diagnosis on page 6-83* for an overview of the diagnostic approach.
- *Diagnostic Procedure Instructions on page 6-84* provides an overview of each diagnostic category.

DTC Descriptor

DTC B3622: Steering Wheel Controls Signal Circuit

For symptom byte information refer to *Symptom Byte List on page 6-117*.

Diagnostic Fault Information

Circuit	Short to Ground	Open/High Resistance	Short to Voltage	Signal Performance
12 V Reference	B1529 03, B1405 03	1	B1529 07	B1529 07
Signal	1	1	B3622 07	—
1. Steering Wheel Controls Inoperative				

Circuit/System Description

The body control module (BCM) monitors the steering wheel control signal circuit voltage. If the voltage level is too high, damage may result in the system. When a high voltage condition is detected, the BCM will ignore the switch command.

Conditions for Running the DTC

- Battery voltage is between 9–16 V.
- Vehicle in Service Mode.

Conditions for Setting the DTC

The BCM detects a short to voltage in the steering wheel control switch signal circuit.

Action Taken When the DTC Sets

The BCM will ignore switch inputs.

Conditions for Clearing the DTC

- The condition responsible for setting the DTC no longer exists.

Reference Information

Schematic Reference

Steering Wheel Secondary/Configurable Control Schematics on page 8-103

Connector End View Reference

Component Connector End Views on page 11-455

Description and Operation

Steering Wheel Controls Description and Operation on page 8-112

Electrical Information Reference

- *Circuit Testing on page 11-871*
- *Connector Repairs on page 11-895*
- *Testing for Intermittent Conditions and Poor Connections on page 11-877*
- *Wiring Repairs on page 11-883*

Scan Tool Reference

Control Module References on page 6-3 for scan tool information

Circuit/System Testing

1. Vehicle OFF and all vehicle systems OFF, disconnect the harness connector at the S70R Steering Wheel Controls Switch – Right, Vehicle in Service Mode.
2. Test for 11.8–12.2 V between the reference voltage circuit terminal 4 and ground.

⇒ **If less than 11.8 V**

2.1. Vehicle OFF, disconnect the harness connector at the K9 body control module.

2.2. Test for infinite resistance between the reference voltage circuit and ground.

⇒ If less than infinite resistance, repair the short to ground on the circuit.

⇓ If infinite resistance

2.3. Test for less than 2 Ω in the reference voltage circuit end to end.

⇒ If 2 Ω or greater, repair the open/high resistance in the circuit.

⇒ If less than 2 Ω, replace the K9 body control module.

⇒ **If greater than 12.2 V**

2.1. Vehicle OFF, disconnect the harness connector at the K9 body control module, Vehicle in Service Mode.

2.2. Test for less than 1 V between the reference voltage circuit and ground.

⇒ If 1 V or greater, repair the short to voltage on the circuit.

⇒ If less than 1 V, replace the K9 body control module.

⇓ **If between 11.8–12.2 V**

3. Test for 11.8–12.2 V between the reference voltage circuit terminal 4 and signal circuit terminal 3.

⇒ **If not between 11.8–12.2 V**

3.1. Vehicle OFF, disconnect the harness connector at the K9 body control module.

3.2. Test for less than 1 V between the signal circuit and ground.

⇒ If 1 V or greater, repair the short to voltage on the circuit.

⇓ If less than 1 V

3.3. Test for less than 2 Ω in the signal circuit end to end.

⇒ If 2 Ω or greater, repair the open/high resistance in the circuit.

⇒ If less than 2 Ω replace the K9 body control module.

⇓ **If between 11.8–12.2 V**

4. Vehicle OFF, disconnect the harness connector at the K9 body control module.
5. Test for infinite resistance between the signal circuit terminal 3 and ground.

⇒ **If less than infinite resistance**

Repair the short to ground on the circuit.

⇓ **If infinite resistance**

6. Test or replace the S70R Steering Wheel Controls Switch – Right.

Component Testing

1. Vehicle OFF, disconnect the harness connector at the S70R Steering Wheel Controls Switch – Right.
2. Test the resistance between the signal terminal 3 and the reference voltage terminal 4 while pressing the appropriate steering wheel controls switch button listed below:

⇒ **If not the specified value**

Replace the S70R Steering Wheel Controls Switch – Right.

⇓ **If the specified value**

3. All OK

Function Switch	Minimum Resistance Value	Maximum Resistance Value
Hang Up-Mute	5.0 kΩ	5.5 kΩ
Telephone Switch	3.6 kΩ	4 kΩ
Arrow Down	2.2 kΩ	2.6 kΩ
Arrow Up	1.7 kΩ	2 kΩ
Volume Down	1.4 kΩ	1.6 kΩ
Volume Up	1.1 kΩ	1.3 kΩ
No Switch Pressed	Infinite	Infinite

Repair Instructions

Perform the *Diagnostic Repair Verification on page 6-123* after completing the repair.

Control Module References on page 6-3 for BCM replacement, programming and setup

Symptoms - Secondary and Configurable Customer Controls

Important: The following steps must be completed before using the symptom tables.

1. Perform the *Diagnostic System Check - Vehicle on page 6-91* before using the symptom tables in order to verify that all of the following are true:
   - There are no DTCs set.
   - The control modules can communicate via the serial data link.
2. Review the system description and operation in order to familiarize yourself with the system functions. Refer to *Steering Wheel Controls Description and Operation on page 8-112*.

Visual/Physical Inspection

- Inspect for aftermarket devices which could affect the operation of the steering wheel controls. Refer to *Checking Aftermarket Accessories on page 11-871*.
- Inspect the easily accessible or visible system components, for obvious damage or conditions, which could cause the symptom.

Intermittent

Faulty electrical connections or wiring may be the cause of intermittent conditions. Refer to *Testing for Intermittent Conditions and Poor Connections on page 11-877*.

Symptom List

Refer to a symptom diagnostic procedure from the following list in order to diagnose the symptom:

Refer to *Steering Wheel Controls Malfunction on page 8-110* in order to diagnose the symptom.

Steering Wheel Controls Malfunction

Diagnostic Instructions

- Perform the *Diagnostic System Check - Vehicle on page 6-91* prior to using this diagnostic procedure.
- Review *Strategy Based Diagnosis on page 6-83* for an overview of the diagnostic approach.
- *Diagnostic Procedure Instructions on page 6-84* provides an overview of each diagnostic category.

Diagnostic Fault Information

Circuit	Short to Ground	Open/High Resistance	Short to Voltage	Signal Performance
12 V Reference	B1529 03, B1405 03	1	B1529 07	B1529 07
Signal	1	1	B3622 07	—
1. Steering Wheel Controls Inoperative				

Circuit/System Description

The body control module (BCM) supplies voltage to the audio steering wheel control switches and monitors the return signal. Each switch state is associated to a set resistance value and when pressed a specific voltage drop occurs across the resistor unique to the switch. The BCM identifies the switch selection and activates the feature.

Reference Information

Schematic Reference

Steering Wheel Secondary/Configurable Control Schematics on page 8-103

Connector End View Reference

Component Connector End Views on page 11-455

Description and Operation

Steering Wheel Controls Description and Operation on page 8-112

Electrical Information Reference

- *Circuit Testing on page 11-871*
- *Connector Repairs on page 11-895*
- *Testing for Intermittent Conditions and Poor Connections on page 11-877*
- *Wiring Repairs on page 11-883*

Scan Tool Reference

Control Module References on page 6-3 for scan tool information

Circuit/System Verification

1. Vehicle in Service Mode.
2. Verify the primary controls of the associated component are functioning properly.

⇒ **If any of the primary controls do not function properly**

Refer to *Symptoms - Entertainment on page 8-28*

⇓ **If all of the primary controls function properly**

3. Refer to Circuit/System Testing.

Circuit/System Testing

1. Vehicle OFF and all vehicle systems OFF, disconnect the harness connector at the S70R Steering Wheel Controls Switch – Right, Vehicle in Service Mode.
2. Test for 11.8–12.2 V between the reference voltage circuit terminal 4 and ground.

⇒ **If less than 11.8 V**

2.1. Vehicle OFF, disconnect the harness connector at the K9 body control module.

2.2. Test for infinite resistance between the reference voltage circuit and ground.

⇒ If less than infinite resistance, repair the short to ground on the circuit.

⇓ If infinite resistance

2.3. Test for less than 2 Ω in the reference voltage circuit end to end.

⇒ If 2 Ω or greater, repair the open/high resistance in the circuit.

⇒ If less than 2 Ω, replace the K9 body control module.

⇒ **If greater than 12.2 V**

2.1. Vehicle OFF, disconnect the harness connector at the K9 body control module, Vehicle in Service Mode.

2.2. Test for less than 1 V between the reference voltage circuit and ground.

⇒ If 1 V or greater, repair the short to voltage on the circuit.

⇒ If less than 1 V, replace the K9 body control module.

⇓ **If between 11.8–12.2 V**

3. Test for 11.8–12.2 V between the reference voltage circuit terminal 4 and signal circuit terminal 3.

⇒ **If not between 11.8–12.2 V**

3.1. Vehicle OFF, disconnect the harness connector at the K9 body control module.

3.2. Test for less than 1 V between the signal circuit and ground.

⇒ If 1 V or greater, repair the short to voltage on the circuit.

⇓ If less than 1 V

3.3. Test for less than 2 Ω in the signal circuit end to end.

⇒ If 2 Ω or greater, repair the open/high resistance in the circuit.

⇒ If less than 2 Ω replace the K9 body control module.

⇓ **If between 11.8–12.2 V**

4. Vehicle OFF, disconnect the harness connector at the K9 body control module.
5. Test for infinite resistance between the signal circuit terminal 3 and ground.

⇒ **If less than infinite resistance**

Repair the short to ground on the circuit.

⇓ **If infinite resistance**

6. Test or replace the S70R Steering Wheel Controls Switch – Right.

Component Testing

1. Vehicle OFF, disconnect the harness connector at the S70R Steering Wheel Controls Switch – Right.
2. Test the resistance between the signal terminal 3 and the reference voltage terminal 4 while pressing the appropriate steering wheel controls switch button listed below:

⇒ **If not the specified value**

Replace the S70R Steering Wheel Controls Switch – Right.

⇓ **If the specified value**

3. All OK

Function Switch	Minimum Resistance Value	Maximum Resistance Value
Hang Up-Mute	5.0 kΩ	5.5 kΩ
Telephone Switch	3.6 kΩ	4 kΩ
Arrow Down	2.2 kΩ	2.6 kΩ
Arrow Up	1.7 kΩ	2 kΩ
Volume Down	1.4 kΩ	1.6 kΩ
Volume Up	1.1 kΩ	1.3 kΩ
No Switch Pressed	Infinite	Infinite

Repair Instructions

Perform the *Diagnostic Repair Verification on page 6-123* after completing the repair.

Control Module References on page 6-3 for BCM replacement, programming and setup

Description and Operation

Steering Wheel Controls Description and Operation

Steering Wheel Controls Block Diagram

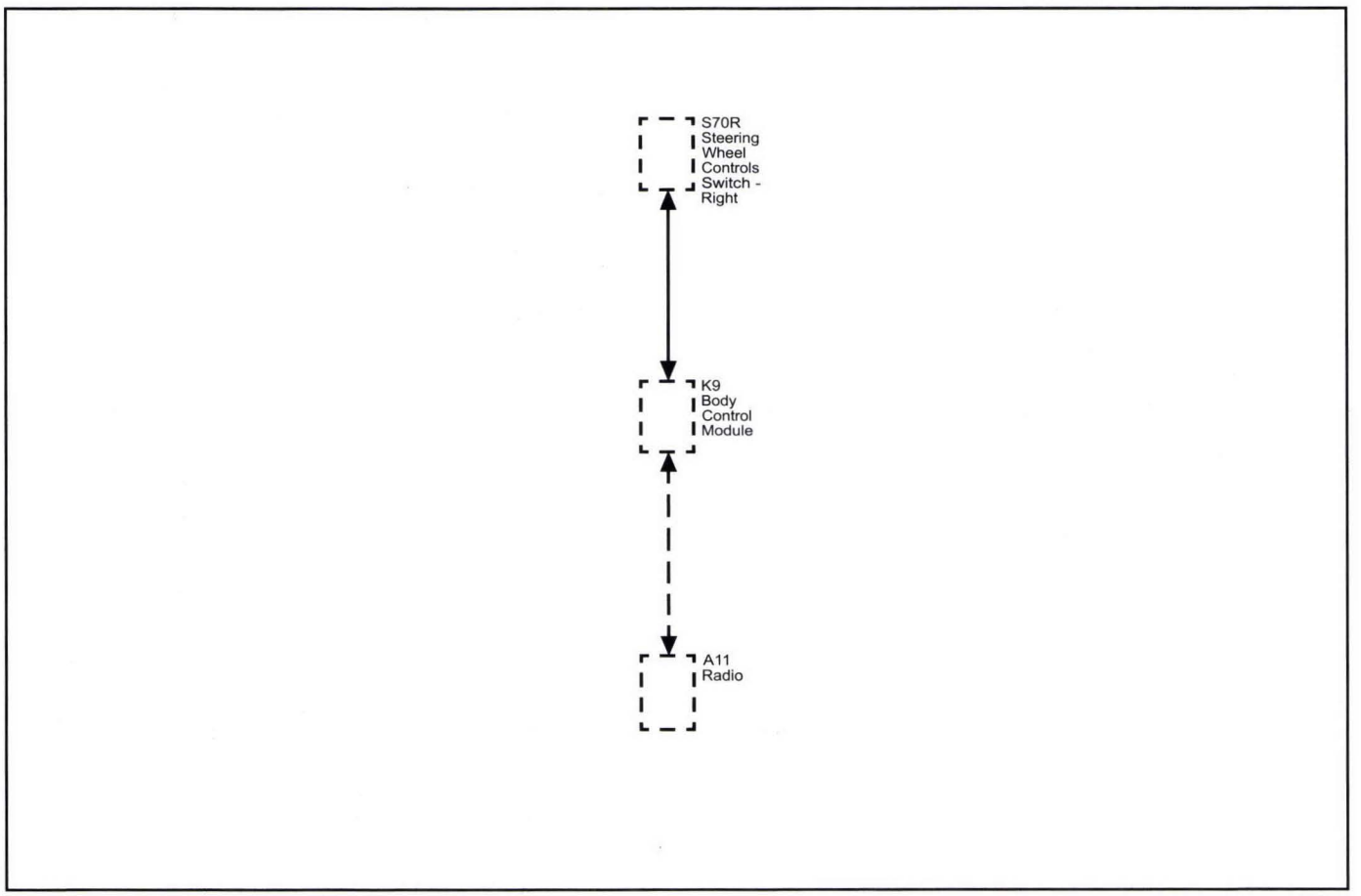

3469881

The steering wheel control switches duplicate the function of the primary controls of the associated component, through a network of momentary contact switches and a series of resistors. The body control module (BCM) supplies voltage to the switches and monitors the return signal. When a switch is pressed, a specific voltage drops across the resistor unique to that switch. The BCM identifies the switch selected and sends a serial data message to the component controlled by the switch, activating the feature.

This section is intended to diagnose the circuits between the BCM and the steering wheel control switches. If the primary control for the device is inoperative, refer to the appropriate section for the component the steering wheel control switch is used for.

Section 9

Engine/Propulsion

12 V Starting and Charging 9-7
Specifications 9-7
Fastener Tightening Specifications 9-7
Schematic and Routing Diagrams 9-7
Starting and Charging Schematics 9-8
Diagnostic Information and Procedures 9-9
DTC B1325, B1330, B1517, C0800, C0899, C0900, C12E1, C12E2, P0561-P0563, P1A0C, P1A0D, or P1EFC 9-9
DTC B1516 9-11
DTC B151A 9-13
DTC B1527 9-14
Symptoms - Engine Electrical 9-14
Battery Inspection/Test 9-15
Battery Charging 9-16
Battery Electrical Drain/Parasitic Load Test 9-17
Charging System Test 9-19
Repair Instructions 9-20
Battery Negative Cable Disconnection and Connection 9-20
Battery Current Sensor Replacement 9-20
Battery Negative Cable Replacement 9-22
Battery Positive Cable Replacement 9-24
Battery Replacement 9-28
Battery Tray Replacement 9-30
Description and Operation 9-34
Battery Description and Operation 9-34
Charging System Description and Operation ... 9-34
Special Tools and Equipment 9-37

Cruise Control 9-38
Schematic and Routing Diagrams 9-38
Cruise Control Schematics 9-39
Diagnostic Information and Procedures 9-40
DTC P0572 or P0573 9-40
DTC P0575 9-42
DTC P0703 9-43
Symptoms - Cruise Control 9-43
Cruise Control Indicator Malfunction 9-44
Cruise Control Malfunction - DTC B3794, P0564, P0565, P0567, P0568, P056C, P0580, P0581, P155A-P155C, or P162C 9-45
Repair Instructions 9-47
Cruise Control Switch Replacement 9-47
Description and Operation 9-48
Cruise Control Description and Operation 9-48

Hybrid/EV Controls 9-53
Specifications 9-53
Fastener Tightening Specifications 9-53
Schematic and Routing Diagrams 9-53
Hybrid/EV Controls Schematics 9-54
Component Locator 9-64
Hybrid Controls Electronic Component Views 9-64
Diagnostic Information and Procedures 9-65
DTC P0601-P0606, P060A, P062F, or P262B (Hybrid Powertrain Control Module 1) 9-65
DTC P0601-P0604, P0606, P062F, P0630, P16F3, or P262B (ECM) 9-67
DTC P061A or P061B 9-69
DTC P0641, P0697, or P06A3 9-70
DTC P0650, P263A, or P263B 9-72
DTC P06AF 9-74
DTC P06B1, P06B2, P06E7, or P06E8 9-76
DTC P0A1B 9-77
DTC P0A3F, P0A40, P0C52, P0C53, P0C5C, P0C5D, or P1B03 9-78
DTC P0A5E, P0A61, or P0A64 9-82
DTC P0A78 9-83
DTC P0A8D 9-85
DTC P0AC4 9-86
DTC P0AEE, P0AEF, P0AF0, P0BD2-P0BD4, or P0BDC-P0BDE 9-87
DTC P0B01, P0B04, or P0B07 9-89
DTC P0B0D 9-91
DTC P0BE6-P0BE8, P0BEA-P0BEC, P0BEE, P0BEF, or P0BF0 9-92
DTC P0BFD 9-93
DTC P0C01 9-95
DTC P0C0B 9-97
DTC P0C11-P0C13 9-98
DTC P0C17 or P1B0F 9-100
DTC P0C19 9-103
DTC P0C28 9-104
DTC P0C4E 9-105
DTC P0C76 9-107
DTC P150D or P150E 9-108
DTC P15F1 9-110
DTC P15FB 9-111
DTC P15FC 9-112
DTC P16F2 9-113
DTC P16F3 9-115

DTC P16F4 9-116
DTC P16F6 9-118
DTC P179A 9-119
DTC P181C-P181F, P183A-P183E, P184A, or P184B 9-120
DTC P183F 9-123
DTC P1A4F, P1A50, P1A51, P1ADC, or P1EB6 9-124
DTC P1A56 9-125
DTC P1ADE or P1ADF 9-126
DTC P1AE8 or P1AE9 9-127
DTC P1AEC or P1AEE 9-128
DTC P1AF0 9-130
DTC P1AF4 or P1AF5 9-131
DTC P1B0B or P1B0C 9-132
DTC P1B0D 9-133
DTC P1B0F 9-134
DTC P1B15 9-137
DTC P1B41 9-138
DTC P1BFF, P1E23-P1E25, or P1EB8 9-139
DTC P1E00 9-140
DTC P1E0A 9-141
DTC P1E19 or P1E1A 9-142
DTC P1E1B-P1E1F 9-143
DTC P1E20-P1E22 9-145
DTC P1E27 or P1E28 9-146
DTC P1E29 9-147
DTC P1E2A-P1E2F 9-148
DTC P1E34-P1E36 9-149
DTC P1E37 9-150
DTC P1E38 9-151
DTC P1E39 9-152
DTC P1E3A 9-154
DTC P1E4A 9-155
DTC P1F59, P1F5A, or P1F5B 9-156
DTC P1F5D or P1F5E 9-159
DTC P2122, P2123, P2127, P2128, or P2138 9-161
DTC P2537 (Hybrid Powertrain Control Module 1) 9-165
DTC P2797 9-167
Symptoms - Hybrid Controls 9-167
Sport Mode Indicator Malfunction 9-168
DC Power Conversion Test 9-169
Repair Instructions 9-171
Engine Control Module Replacement 9-171
Engine Control Module Bracket Replacement 9-172
High Voltage Disconnect Circuit Connector Cover Replacement 9-174
High Voltage Battery Disconnect Control Module Module Replacement (with quick charge) 9-175
High Voltage Battery Disconnect Control Module Module Replacement (without quick charge) 9-179
Drive Motor Power Inverter Module 3 Phase Cable Replacement 9-182
Drive Motor Generator Power Inverter Module Replacement 9-184
Accessory DC Power Control Module Replacement 9-189
Description and Operation 9-192
Accessory DC Power Control Module Description and Operation 9-192
Drive Motor Generator Power Inverter Module Description and Operation 9-193
Engine Control Module (ECM) Description and Operation 9-194
Electromagnetic Compatibility Description 9-196
High Voltage Monitoring Systems Description 9-196
Hybrid Modes of Operation Description 9-197
Special Tools and Equipment 9-197

Hybrid/EV Battery Heating and Cooling ... 9-198
Specifications 9-198
Temperature Versus Resistance (Hybrid/EV Battery Pack Coolant Temperature Sensor) 9-198
Temperature Versus Resistance (Hybrid/EV Battery Temperature Sensor) 9-198
Fastener Tightening Specifications 9-199
Approximate Fluid Capacities 9-200
Schematic and Routing Diagrams 9-200
Hybrid/EV Cooling Schematics 9-201
Diagnostic Information and Procedures 9-205
DTC P0480 9-205
DTC P0A7E 9-207
DTC P0A9C-P0A9E, P0AC6-P0ACD, P0AE9-P0AEB, P0BC3-P0BC5, or P0C34-P0C36 9-209
DTC P0C43-P0C45 9-212
DTC P0C47, P0C4A, P1E8C, or P1E8D 9-215
DTC P0CD6-P0CD8 9-219
DTC P0CE2, P0CE3, P1EC7, P1EC8, or P1F56 9-222
DTC P0CE5-P0CE7 and P1F58 9-225
DTC P0CE9, P0CEA, P1F44, or P1F45 9-228
DTC P0CEF-P0CF1 9-231
DTC P148A-P148C 9-233
DTC P1EC6 9-235
DTC P1FFB-P1FFE 9-238
DTC P1FFF 9-240
Hybrid/EV Electronics Cooling Diagnostic 9-241
Hybrid/EV Battery Pack Coolant Pump Malfunction 9-246
Hybrid/EV Electronics Coolant Pump Malfunction 9-248
Cooling Fan Malfunction 9-250
Hybrid/EV Battery Pack Coolant Heater Malfunction 9-251
Hybrid Cooling System Loss of Coolant (Drive Motor Battery Cooling System) 9-253
Hybrid Cooling System Loss of Coolant (Drive Motor Generator Power Inverter Module Cooling System) 9-254

Hybrid Cooling System Pressure Cap Testing 9-256
Hybrid Cooling System Leak Test 9-256
Hybrid Battery Pack Coolant Passage Leak Test 9-257
Repair Instructions 9-257
Drive Motor Battery Cooling System Draining and Filling 9-257
Drive Motor Generator Power Inverter Module Cooling System Draining and Filling 9-264
Drive Motor Generator Power Inverter Module Cooling Outlet Hose Replacement (PE From A/Separator To Water Pump) 9-268
Electric Differential Drive Motor Power Inverter Module Cooling Hose Replacement (PE TPIM to LTR) 9-270
Coolant Temperature Sensor Replacement (Assembly) 9-271
Coolant Temperature Sensor Replacement (Heater Assembly) 9-272
Coolant Temperature Sensor Replacement (Coolant Temperature Assembly Sensor) 9-273
Drive Motor Battery Coolant Level Sensor Replacement 9-274
Auxiliary Radiator Replacement 9-275
Radiator Surge Tank Replacement (Reserve Energy Supply System Reservoir) 9-276
Radiator Surge Tank Replacement (Power Energy Reservoir) 9-277
Radiator Surge Tank Replacement (Heater Reservoir) 9-278
Radiator Surge Tank Clamp Bracket Replacement (Right Side) 9-279
Radiator Surge Tank Clamp Bracket Replacement (Left Side) 9-280
Radiator Surge Tank Support Bracket Replacement 9-281
Radiator Overflow Hose Replacement 9-282
Cooling Fan and Shroud Replacement 9-283
Engine Coolant Temperature Sensor Replacement - Radiator Side 9-285
Radiator Drain Cock Replacement 9-286
Radiator Lower Bracket Replacement 9-287
Radiator Lower Insulator Replacement 9-288
Radiator Upper Bracket Replacement 9-289
Radiator Upper Insulator Replacement 9-290
Drive Motor Generator Control Module Coolant Pump Replacement 9-291
Drive Motor Generator Control Module Cooling Outlet Hose Replacement (Auxiliary Radiator to Drive Motor Battery Charger) 9-292
Drive Motor Generator Control Module Cooling Outlet Hose Replacement (Long Hose) 9-293
Drive Motor Generator Control Module Cooling Outlet Hose Replacement (Two Bending) 9-294
Drive Motor Generator Control Module Cooling Outlet Hose Replacement (Straight Hose) ... 9-296
Drive Motor Generator Control Module Radiator Inlet Hose Replacement (PE From LTR to A/Separator) 9-297
Generator Control Module Coolant Hose Replacement (PE From APM TO TPIM) 9-298
Radiator Grille Guard Replacement 9-300
Radiator Air Lower Baffle and Deflector Replacement (Air Baffle Lower) 9-301
Radiator Air Upper Baffle and Deflector Replacement (Air Baffle Upper) 9-302
Radiator Air Upper Baffle and Deflector Replacement (On Top of Radiator) 9-303
Battery Distribution Fuse Block Replacement 9-303
Battery Heater Replacement 9-306
Drive Motor Battery Coolant Cooler Replacement 9-308
Drive Motor Battery Coolant Cooler Bracket Replacement 9-311
Drive Motor Battery Coolant Radiator Replacement 9-312
Drive Motor Battery Coolant Pump Replacement 9-315
Drive Motor Battery Coolant Cooler Outlet Hose Replacement (From the Coolant Flow Valve to Radiator) 9-316
Drive Motor Battery Coolant Cooler Outlet Hose Replacement (From RESS to Outlet Long Pipe) 9-317
Drive Motor Battery Coolant Flow Control Valve Replacement 9-318
Drive Motor Battery Coolant Inlet Hose Replacement (From RESS to Inlet Long Pipe) 9-321
Drive Motor Battery Coolant Inlet Hose Replacement (From Water Pump to Drive Motor Battery Coolant Inlet Pipe Long) 9-322
Drive Motor Battery Coolant Inlet Hose Replacement (Outlet Hose Connector to Radiator) 9-323
Drive Motor Battery Coolant Inlet Pipe Replacement (Inlet Pipe) 9-324
Drive Motor Battery Coolant Inlet Pipe Replacement (Outlet Pipe) 9-325
Drive Motor Battery Coolant Inlet Pipe Replacement (Long One) 9-327
Drive Motor Battery Coolant Outlet Hose Replacement 9-328
Drive Motor Battery Radiator Inlet Hose Replacement (RESS From Radiator Outlet to A/Separator) 9-329
Drive Motor Battery Radiator Inlet Hose Replacement (RESS From A/Separator To Water Pump) 9-331
Drive Motor Battery Radiator Inlet Hose Replacement (RESS From Radiator Outlet Tee To A/Separator) 9-332
Drive Motor Battery Radiator Outlet Hose Replacement 9-334

Drive Motor Battery Coolant Cooler Inlet Hose Replacement (RESS From 4way V/V(C) To Chiller) 9-335
High Voltage Battery Cooling Manifold Inlet Hose Replacement (Coolant to all Battery Cells) 9-336
High Voltage Battery Cooling Manifold Inlet Hose Replacement (Individual Battery Cell Coolant Inlet Hose) 9-338
High Voltage Battery Cooling Manifold Outlet Hose Replacement (Coolant to all Battery Cells) 9-339
High Voltage Battery Cooling Manifold Outlet Hose Replacement (Individual Battery Cell Coolant Outlet Hose) 9-342
Hybrid/EV Battery Pack Coolant Control Valve Learn 9-343
Description and Operation 9-343
Hybrid Cooling System Description and Operation 9-343
Special Tools and Equipment 9-344

Hybrid/EV Energy Storage 9-347
Specifications 9-347
Fastener Tightening Specifications 9-347
Schematic and Routing Diagrams 9-347
Hybrid/EV Energy Storage Schematics 9-348
Diagnostic Information and Procedures 9-362
High Voltage Safety 9-362
High Voltage Disabling 9-363
High Voltage Enabling 9-367
EL-48571 High Voltage Battery Pin Out Box Reference 9-368
DTC P0A0C or P0A0D 9-373
DTC P0A7F 9-376
DTC P0AA1, P0AA4, P0AD9, P0ADD, P0AE2, P0AE4, P0D0A, P0D11, P1EBC, P1EBE-P1EC0, or P1EC3-P1EC5 9-378
DTC P0AA6, P0DAA, P1AE6, or P1F0E 9-392
DTC P0ABB, P0ABC, or P0ABD 9-395
DTC P0AF8 9-398
DTC P0AFA or P0AFB 9-401
DTC P0B10, P0B11, or P0B13 9-405
DTC P0B3B-P0BBB, P1B16-P1B2D, P1B45-P1BFE, P1E01-P1E06, or P1E4C-P1E8B 9-408
DTC P0C77 or P0C78 9-412
DTC P1A07, P1E93, P1E99, P1E9F, P1EA5, P1FC3-P1FC8, P3035, or P3040 9-416
DTC P1E92, P1E98, P1E9E, P1EA4, P1FC9, P1FCA-P1FCE, P3036, or P3041 9-418
DTC P1EAB or P1EAC 9-420
DTC P1FD5-P1FF2 9-424
DTC P1F17 9-427
DTC P1FF4 9-429
Loss of Isolation on the High Voltage Main Bus 9-430
Hybrid/EV Battery Voltage Present 9-437
Troubleshooting With an Insulation Multimeter 9-438
Rechargeable Energy Storage System Smoke Test 9-440
Repair Instructions 9-441
High Voltage System Inspection 9-441
Drive Motor Battery High Voltage Manual Disconnect Lever Replacement 9-445
High Voltage Battery High Voltage Manual Disconnect Connector Replacement 9-447
Drive Motor Battery Cover Replacement 9-449
Battery Cover Seal Replacement 9-450
Battery Energy Control Module Replacement 9-451
300-Volt Battery Positive and Negative Cable Replacement (Drive Motor Generator Power Inverter Module to Drive Motor Battery) 9-454
300-Volt Battery Positive and Negative Cable Replacement (Drive Motor Generator Power Inverter Module to High Voltage Battery Disconnect Module) 9-457
High Voltage Battery Disconnect Cable Replacement 9-458
Cell Battery High Voltage Sensor Replacement (Temperature Sensors) 9-461
Cell Battery Replacement (Battery Cell 1) 9-462
Cell Battery Replacement (Battery Cell 2) 9-467
Cell Battery Replacement (Battery Cell 3) 9-473
Cell Battery Replacement (Battery Cell 4) 9-479
Cell Battery Replacement (Battery Cell 5) 9-485
Cell Battery Replacement (Battery Cell 6) 9-490
Drive Motor Battery Current Sensor Replacement 9-497
Drive Motor Battery Positive High Voltage Contactor Relay Replacement 9-499
Drive Motor Battery Positive and Negative Cable Replacement (Battery Cell 1 to Drive Motor Battery High Voltage Contactor Relay) 9-504
Drive Motor Battery Positive and Negative Cable Replacement (Battery Cell 6 to Drive Motor Battery Positive High Voltage Contactor Relay) 9-507
High Voltage Battery Interface Control Module Replacement 9-512
Battery Cable Replacement (Drive Motor Generator Power Inverter Module to Frame Rail) 9-515
Battery Cable Replacement (APM Module to Frame Rail) 9-516
Battery Cable Replacement (Drive Motor Contactor Relay High Voltage Bus Bar) 9-517
Battery Cable Replacement (Battery Cell High Voltage Cables) 9-521
Battery Tray Replacement 9-522
Drive Motor Battery Replacement and Shipping Preparation 9-524
Auxiliary Battery Wiring Harness Replacement (High Voltage Connector X2) 9-530

Auxiliary Battery Wiring Harness Replacement (Connector X1) 9-531
Auxiliary Battery Wiring Harness Replacement (Battery Cell Temperature Sensors, Current Sensor, X357, X358) 9-532
Auxiliary Battery Wiring Harness Replacement (Battery Cell Connectors, Battery Energy Control Module, Battery Interface Control Module) 9-535
Clear Secured High Voltage DTCs 9-539
Hybrid/EV Battery Pack Capacity Learn 9-541
Hybrid/EV Battery Cell Balancing 9-541
Hybrid/EV Battery System Verification 9-543
Description and Operation 9-545
Drive Motor Battery System Description 9-545
Hybrid/EV System High Voltage Isolation Description 9-545
Special Tools and Equipment 9-549

Plug-In Charging 9-552
Schematic and Routing Diagrams 9-552
Plug-In Charging Schematics 9-553
Diagnostic Information and Procedures 9-558
DTC P0CF4-P0CF6 9-558
DTC P0CF9 or P0D01 9-561
DTC P0D1F 9-563
DTC P0D21-P0D23 9-564
DTC P0D2B or P0D2C 9-567
DTC P0D39-P0D3B, P0D49, P0D4E, P0D4F, P0D53, P0D54, P1ECB-P1ECD, P1ED0-P1ED2, P1ED6-P1ED9, P1EDB, P1EDC, P1EDE-P1EE1, P1EE3, P1EE5, P1EE7-P1EED, P1EFE-P1F02, or P1F14-P1F16 9-570
DTC P0D3E or P0D3F 9-572
DTC P0D40, P1EDA, P1EDD, or P1F03 9-575
DTC P0D43-P0D45 9-576
DTC P0D57-P0D59 9-578
DTC P0D5B, P0D5C, P1ECE, or P1EFD 9-581
DTC P0D5E 9-583
DTC P1EE6 9-589
DTC P1EEF or P0D4A 9-592
DTC P1EF0 or P1EF1 9-594
DTC P1EF3-P1EF5 9-596
DTC P1EFA or P1EFB 9-597
DTC P1FFF 9-599
DTC P3002, P3003, P301F, or P3020 9-600
DTC P3005, P3006, P3021, or P3022 9-604
DTC P3008, P3009, or P3023 9-608
DTC P300B 9-611
DTC P300C, P300D, or P300F 9-614
DTC P3010, P3013, or P3014 9-616
DTC P3015, P3018, P301C, or P301D 9-618
DTC P301E 9-622
DTC P302B-P302D 9-625
DTC P302F 9-627
Plug-In Charging Malfunction (without CBT) 9-634
Plug-In Charging Malfunction (without CBT - GME Only) 9-639
Plug-In Charging Indicator Malfunction 9-644
Repair Instructions 9-647
Charge Port Door Replacement 9-647
Charge Port Housing Replacement 9-648
Drive Motor Battery Charger Replacement 9-649
Drive Motor Battery Charger Receptacle Replacement (Without quick charge) 9-652
Drive Motor Battery Charger Receptacle Replacement (With quick charge) 9-654
DC Charging Disabled Reset 9-656
Description and Operation 9-657
Plug-In Charging System Description and Operation 9-657
Special Tools and Equipment 9-658

BLANK

12 V Starting and Charging

Specifications

Fastener Tightening Specifications

Application	Specification	
	Metric	English
Battery Hold Down Retainer Fastener	8 N•m	71 lb in
Battery Negative Cable Clamp Fastener (Battery Post)	5 N•m	44 lb in
Battery Negative Cable Ground Fastener (Frame Rail)	9 N•m	80 lb in
Battery Positive Cable Clamp Fastener (Battery Post)	5 N•m	44 lb in
Battery Positive Cable Fastener (Accessory DC Power Control Module)	22 N•m	16 lb ft
Battery Positive Cable Fastener (Underhood Fuse Block)	22 N•m	16 lb ft
Battery Positive Cable Frame Ground Fastener	9 N•m	80 lb in
Battery Positive Cable Drivetrain and Front Suspension Ground Fastener	9 N•m	80 lb in
Battery Tray Fastener	22 N•m	16 lb ft
Engine Harness Negative Ground Fastener (Battery Negative Clamp)	6 N•m	53 lb in

Schematic and Routing Diagrams

Starting and Charging Schematics (12V Battery Management)

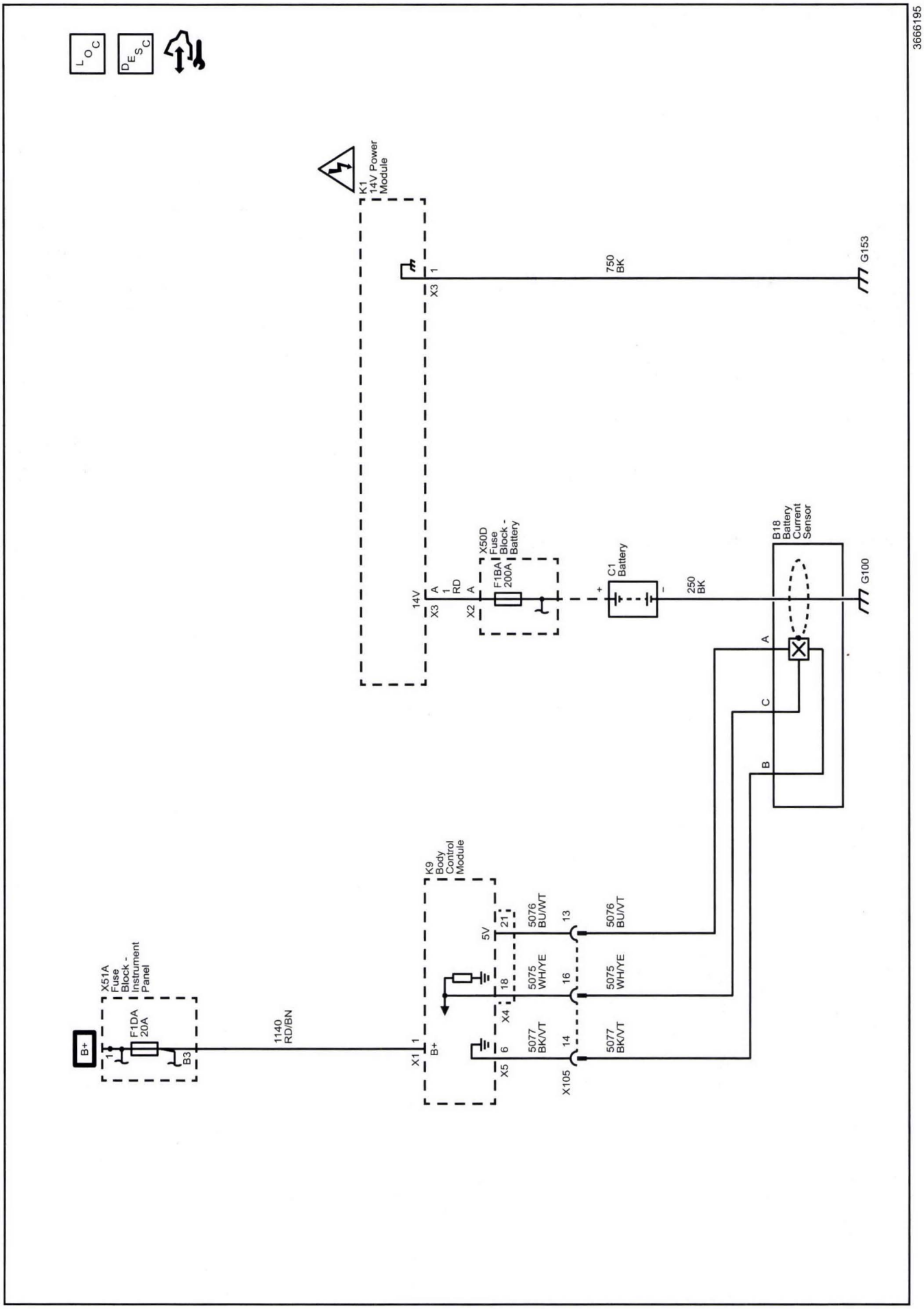

Diagnostic Information and Procedures

DTC B1325, B1330, B1517, C0800, C0899, C0900, C12E1, C12E2, P0561-P0563, P1A0C, P1A0D, or P1EFC

Diagnostic Instructions

- Perform the *Diagnostic System Check - Vehicle on page 6-91* prior to using this diagnostic procedure.
- Review *Strategy Based Diagnosis on page 6-83* for an overview of the diagnostic approach.
- *Diagnostic Procedure Instructions on page 6-84* provides an overview of each diagnostic category.

DTC Descriptors

DTC B1325 03: Device Power Circuit Voltage Below Threshold
DTC B1325 07: Device Power Circuit Voltage Above Threshold
DTC B1330 03: Device Power 2 Circuit Voltage Below Threshold
DTC B1330 04: Device Power 2 Circuit Voltage Open Circuit
DTC B1517 03: Battery Voltage Below Threshold
DTC B1517 07: Battery Voltage Above Threshold
DTC B1517 5A: Battery Voltage Plausibility Failure
DTC C0800 03: Device Power 1 Circuit Voltage Below Threshold
DTC C0800 07: Device Power 1 Circuit Voltage Above Threshold
DTC C0800 11: Device Power 1 Circuit High Input
DTC C0800 0D: Device Power 1 Circuit High Resistance
DTC C0899 00: Device Voltage Low
DTC C0899 03: Device Voltage Low
DTC C0900 00: Device Voltage High
DTC C0900 07: Device Voltage Above Threshold
DTC C12E1: Electronic Brake Control Module Supply Circuit Low Voltage
DTC C12E2: Electronic Brake Control Module Supply Circuit High Voltage
DTC P0562: System Voltage Low Voltage
DTC P0563: System Voltage High Voltage
DTC P1A0C: Battery Energy Control Module System Voltage Low Voltage
DTC P1A0D: Battery Energy Control Module System Voltage High Voltage
DTC P1EFC: Battery Charger Control Module System Voltage Low Voltage

Circuit/System Description

The vehicle control modules or sensors monitor the system voltage to verify the system voltage is within the normal operating range.

Conditions for Running the DTC

The vehicle is ON.

Conditions for Setting the DTC

The control module or sensor detects a system voltage of less than approximately 9 V or greater than 18 V for approximately 5 seconds.

Action Taken When the DTC Sets

- A driver information center message and/or warning indicator may be displayed.
- The control module may be temporarily disabled.

Conditions for Clearing the DTC

The system voltage returns to normal operating range.

Diagnostic Aids

- A high or low voltage DTC set or voltage value in multiple modules/sensors indicates a concern in the 12 V charging system.
- A possible cause of this DTC could be overcharging with a 12 V battery charger or jump starting.

Reference Information

Schematic Reference

Control Module References on page 6-3

Connector End View Reference

Component Connector End Views on page 11-455

Description and Operation

Charging System Description and Operation on page 9-34

Electrical Information Reference

- *Circuit Testing on page 11-871*
- *Connector Repairs on page 11-895*
- *Testing for Intermittent Conditions and Poor Connections on page 11-877*
- *Wiring Repairs on page 11-883*

DTC Type Reference

Powertrain Diagnostic Trouble Code (DTC) Type Definitions on page 6-92

Scan Tool Reference

Control Module References on page 6-3 for scan tool information

Circuit/System Verification

1. Vehicle OFF, disconnect the T18 battery charger cord set. Measure and record the 12 V battery voltage at the battery terminals. The battery voltage should stabilize between 12.4 and 12.8 V within a few minutes of turning the Vehicle OFF.
   ⇒ If not within the specified range, refer to *Battery Inspection/Test on page 9-15*.
2. Vehicle ON, accessories OFF, measure and record the 12 V battery voltage at the battery terminals. The voltage should be at least 0.5 V greater than the voltage measured in step 1 but less than 15 V.
   ⇒ If not within the specified range, refer to *DC Power Conversion Test on page 9-169*.
3. Observe the appropriate module scan tool B+ and ignition voltage parameters. The voltage readings should be within 1 V of the battery voltage.

Circuit/System Testing

Note: Use the schematic to identify the following:

- Control modules the vehicle is equipped with
- The control modules ground, B+, and Ignition circuit terminal IDs and connectors

1. Vehicle OFF, disconnect the harness connectors at the appropriate control module.
   Note: Some control module ground circuits may require up to 20 minutes to achieve a resistance reading of less than 10 Ω. In most cases the readings will drop below 20 Ω within 1 minute indicating the control modules are going to sleep.
2. Vehicle OFF, scan tool disconnected, open and close the driver door and wait 1 minute. Test for less than 10 Ω between each ground circuit terminal and ground.
   ⇒ If greater than the specified range, test the ground circuit for an open/high resistance.
3. If equipped, verify that a test lamp illuminates between each B+ circuit terminal and ground.
   ⇒ If the test lamp does not illuminate, test the B+ circuit for a short to ground or an open/high resistance.
4. If equipped, Vehicle in Service Mode, verify that a test lamp illuminates between each ignition circuit terminal and ground.
   ⇒ If the test lamp does not illuminate, test the ignition circuit for a short to ground or an open/high resistance.
5. If all circuits test normal, replace the control module.

Repair Instructions

Perform the *Diagnostic Repair Verification on page 6-123* after completing the repair.

Control Module References on page 6-3 for control module replacement, programming and setup

DTC B1516

Diagnostic Instructions

- Perform the *Diagnostic System Check - Vehicle on page 6-91* prior to using this diagnostic procedure.
- Review *Strategy Based Diagnosis on page 6-83* for an overview of the diagnostic approach.
- *Diagnostic Procedure Instructions on page 6-84* provides an overview of each diagnostic category.

DTC Descriptors

DTC B1516 08: Battery Current Sensor Signal Invalid

DTC B1516 66: Battery Current Sensor Wrong Mounting Position

Diagnostic Fault Information

Circuit	Short to Ground	Open/High Resistance	Short to Voltage	Signal Performance
5 V Reference	B1516 08	B1516 08	—	—
Signal	B1516 08	B1516 08	B1516 08	B1516 08, B1516 66
Low Reference	—	B1516 08	—	—

Circuit/System Description

The battery current sensor is a 3-wire hall effect current sensor. The body control module (BCM) supplies 5 V and ground to the battery current sensor. The battery current sensor measures the amount of current flowing to or from the battery, and supplies a pulse width modulation (PWM) signal to the BCM.

Conditions for Running the DTC

B1516 08

The BCM is awake.

B1516 08

The BCM is awake.

Conditions for Setting the DTC

B1516 08

The battery current signal is less than 4 percent or greater than 96 percent duty cycle for 2 minutes.

B1516 66

The battery current polarity is positive for 2 minutes.

Action Taken When the DTC Sets

The regulated voltage control is disabled.

Conditions for Clearing the DTC

The DTC passes when the battery current returns to the normal range for 15 seconds.

Diagnostic Aids

DTC B1516 08 could be set by overcharging with a battery charger or jump starting.

Reference Information

Schematic Reference

Starting and Charging Schematics on page 9-8

Connector End View Reference

Component Connector End Views on page 11-455

Description and Operation

Charging System Description and Operation on page 9-34

Electrical Information Reference

- *Circuit Testing on page 11-871*
- *Connector Repairs on page 11-895*
- *Testing for Intermittent Conditions and Poor Connections on page 11-877*
- *Wiring Repairs on page 11-883*

Scan Tool Reference

Control Module References on page 6-3 for scan tool information

Circuit/System Testing

B1516 08

1. Vehicle OFF and all vehicle systems OFF, disconnect the harness connector at the B18 Battery Current Sensor. It may take up to 2 minutes for all vehicle systems to power down.
2. Test for less than 30 Ω between the low reference circuit terminal B and ground.

⇒ **If 30 Ω or greater**

2.1. Vehicle OFF, disconnect the X5 harness connector at the K9 Body Control Module.

2.2. Test for less than 2 Ω in the low reference circuit end to end.

⇒ If 2 Ω or greater, repair the open/high resistance in the circuit.

⇒ If less than 2 Ω, replace the K9 Body Control Module.

⇓ **If less than 30 Ω**

3. Vehicle ON.
4. Test for 4.8–5.2 V between the 5 V reference circuit terminal A and ground.

⇒ **If less than 4.8 V**

4.1. Vehicle OFF, disconnect the X4 harness connector at the K9 Body Control Module.

4.2. Test for infinite resistance between the 5 V reference circuit and ground.

⇒ If less than infinite resistance, repair the short to ground on the circuit.

⇓ If infinite resistance

4.3. Test for less than 2 Ω in the 5 V reference circuit end to end.

⇒ If 2 Ω or greater, repair the open/high resistance in the circuit.

⇒ If less than 2 Ω, replace the K9 Body Control Module.

⇒ **If greater than 5.2 V**

4.1. Vehicle OFF, disconnect the X4 harness connector at the K9 Body Control Module, Vehicle ON.

4.2. Test for less than 1 V between the 5 V reference circuit and ground.

⇒ If 1 V or greater, repair the short to voltage on the circuit.

⇒ If less than 1 V, replace the K9 Body Control Module.

⇓ **If between 4.8–5.2 V**

5. Test for 4.8–5.2 V between the signal circuit terminal C and ground.

⇒ **If less than 4.8 V**

5.1. Vehicle OFF, disconnect the X4 harness connector at the K9 Body Control Module.

5.2. Test for infinite resistance between the signal circuit and ground.

⇒ If less than infinite resistance, repair the short to ground on the circuit.

⇓ If infinite resistance

5.3. Test for less than 2 Ω in the signal circuit end to end.

⇒ If 2 Ω or greater, repair the open/high resistance in the circuit.

⇒ If less than 2 Ω, replace the K9 Body Control Module.

⇒ **If greater than 5.2 V**

5.1. Vehicle OFF, disconnect the X4 harness connector at the K9 Body Control Module, Vehicle ON.

5.2. Test for less than 1 V between the signal circuit and ground.

⇒ If 1 V or greater, repair the short to voltage on the circuit.

⇒ If less than 1 V, replace the K9 Body Control Module.

⇓ **If between 4.8–5.2 V**

6. Test or replace the B18 Battery Current Sensor.

B1516 66

1. Verify that the B18 Battery Current Sensor is installed securely around the negative battery cable, with the tape tab pointing away from the negative terminal on the C1 Battery.

⇒ **If the B18 Battery Current Sensor is not installed correctly**

Remove and reinstall the B18 Battery Current Sensor properly.

⇓ **If the B18 Battery Current Sensor is installed correctly**

2. Replace the B18 Battery Current Sensor.

Repair Instructions

Perform the *Diagnostic Repair Verification on page 6-123* after completing the repair.

- *Battery Current Sensor Replacement on page 9-20*
- *Control Module References on page 6-3* for BCM replacement, programming, and setup.

DTC B151A

Diagnostic Instructions

- Perform the *Diagnostic System Check - Vehicle on page 6-91* prior to using this diagnostic procedure.
- Review *Strategy Based Diagnosis on page 6-83* for an overview of the diagnostic approach.
- *Diagnostic Procedure Instructions on page 6-84* provides an overview of each diagnostic category.

DTC Descriptor

DTC B151A 58: Low Battery Capacity Detected

Circuit/System Description

The body control module (BCM) monitors the battery voltage level during an engine crank event to detect a low battery voltage condition.

Conditions for Running the DTC

The vehicle is ON

Conditions for Setting the DTC

A minimum crank battery voltage is less than the minimum crank battery voltage threshold for 16 consecutive crank events.

Action Taken When the DTC Sets

A driver information center message is displayed.

Conditions for Clearing the DTC

The DTC will clear if the minimum crank voltage is greater than the minimum crank voltage threshold during a crank event.

Reference Information

Schematic Reference

Starting and Charging Schematics on page 9-8

Connector End View Reference

Component Connector End Views on page 11-455

Description and Operation

Charging System Description and Operation on page 9-34

Electrical Information Reference

- *Circuit Testing on page 11-871*
- *Connector Repairs on page 11-895*
- *Testing for Intermittent Conditions and Poor Connections on page 11-877*
- *Wiring Repairs on page 11-883*

Scan Tool Reference

Control Module References on page 6-3 for scan tool information

Circuit/System Verification

- Refer to the *Battery Inspection/Test on page 9-15*.
- Refer to the *Charging System Test on page 9-19*.

DTC B1527

Diagnostic Instructions

- Perform the *Diagnostic System Check - Vehicle on page 6-91* prior to using this diagnostic procedure.
- Review *Strategy Based Diagnosis on page 6-83* for an overview of the diagnostic approach.
- *Diagnostic Procedure Instructions on page 6-84* provides an overview of each diagnostic category.

DTC Descriptor

DTC B1527 00: Parasitic Load

Circuit/System Description

The body control module (BCM) monitors the state of charge of the electrical system.

Conditions for Running the DTC

The ignition is in Accessory or Run mode.

Conditions for Setting the DTC

The state of charge at ignition ON is 30% lower than when the engine was running and battery drain is more than 2 A.

Action Taken When the DTC Sets

There is no battery telltale illuminated or DIC message displayed.

Conditions for Clearing the DTC

- The DTC will clear if the fault does not return after 50 consecutive ignition cycles.
- The DTC will clear when run state of charge is greater than or equal to 80%.

Reference Information

Schematic Reference

Starting and Charging Schematics on page 9-8

Connector End View Reference

Component Connector End Views on page 11-455

Description and Operation

Charging System Description and Operation on page 9-34

Electrical Information Reference

- *Circuit Testing on page 11-871*
- *Connector Repairs on page 11-895*
- *Testing for Intermittent Conditions and Poor Connections on page 11-877*
- *Wiring Repairs on page 11-883*

Scan Tool Reference

Control Module References on page 6-3 for scan tool information

Circuit/System Verification

Refer to *Battery Electrical Drain/Parasitic Load Test on page 9-17*.

Symptoms - Engine Electrical

The following steps must be completed before using the symptom tables.

- Perform *Diagnostic System Check - Vehicle on page 6-91* before using the Symptom Tables in order to verify that all of the following are true:
  - The power modes are correct.
  - The control modules can communicate via the serial data link.
  - There are no DTCs set.
- Review the system descriptions and operations in order to familiarize yourself with the system functions. Refer to one of the following system operations:
  - *Battery Description and Operation on page 9-34*
  - *Charging System Description and Operation on page 9-34*

Visual/Physical Inspection

- Inspect for aftermarket devices which could affect the operation of the 12 V charging system. Refer to *Checking Aftermarket Accessories on page 11-871*.
- Inspect the easily accessible or visible system components for obvious damage or conditions which could cause the symptom.

Intermittent

Faulty electrical connections or wiring may be the cause of intermittent conditions. Refer to *Testing for Intermittent Conditions and Poor Connections on page 11-877*.

Symptom List

Refer to a symptom diagnostic procedure from the following list in order to diagnose the symptom:

- *Battery Inspection/Test on page 9-15*
- *Battery Charging on page 9-16*
- *Battery Electrical Drain/Parasitic Load Test on page 9-17*
- *Charging System Test on page 9-19*

Battery Inspection/Test

Diagnostic Instructions

- Perform the *Diagnostic System Check - Vehicle on page 6-91* prior to using this diagnostic procedure.
- Review *Strategy Based Diagnosis on page 6-83* for an overview of the diagnostic approach.
- *Diagnostic Procedure Instructions on page 6-84* provides an overview of each diagnostic category.

Diagnostic Aids

Note: For Warranty repairs —

You must use regionally required battery test equipment for warranty repairs.

For accurate test results the battery must be disconnected from the vehicle and the equipment connected directly to the battery posts. When setting up the equipment, select "Out of Vehicle" and then the correct battery type (Flooded, AGM, Spiral AGM or Stop/Start AGM) and rated CCA (both from the battery label) must be entered.

- Failure to obtain the correct connections during the test may result in a failed test on a good battery.
- Use the Out of Vehicle test (battery disconnected with test equipment connected directly to the posts) for each battery when testing a vehicle with dual batteries.

Reference Information

Schematic Reference

Starting and Charging Schematics on page 9-8

Connector End View Reference

Component Connector End Views on page 11-455

Description and Operation

Battery Description and Operation on page 9-34

Electrical Information Reference

- *Circuit Testing on page 11-871*
- *Connector Repairs on page 11-895*
- *Testing for Intermittent Conditions and Poor Connections on page 11-877*
- *Wiring Repairs on page 11-883*

Scan Tool Reference

Control Module References on page 6-3 for scan tool information

Special Tools

EL 50313 Battery Tester

Circuit/System Testing

Warning: Unless directed otherwise, the ignition must be OFF with the key removed, and all electrical loads must be OFF before servicing any electrical component. Disconnect the negative battery cable to prevent an electrical spark should a tool or equipment come in contact with an exposed electrical terminal. Failure to follow these precautions may result in personal injury and/or damage to the vehicle or its components.

For Vehicles equipped with OnStar® (UE1) with Back Up Battery:

The Back Up Battery is a redundant power supply to allow limited OnStar® functionality in the event of a main vehicle battery power disruption to the VCIM (OnStar®module). Do not disconnect the main vehicle battery or remove the OnStar® fuse with the ignition key in any position other than OFF. Retained accessory power should be allowed to time out or be disabled (simply opening the driver door should disable retained accessory power) before disconnecting power. Disconnecting power to the OnStar® module in any way while the ignition is On or with retained accessory power activated may cause activation of the OnStar® Back-Up Battery system and will discharge and permanently damage the back-up battery. Once the Back-Up Battery is activated it will stay on until it has completely discharged. The back-up battery is not rechargeable and once activated the back-up battery must be replaced.

1. Verify the C1 Battery case is not cracked, broken, or damaged, which may be indicated by battery acid leakage.

⇒ **If there is any apparent damage**

Replace the C1 Battery.

⇓ **If there is no damage**

2. Verify that the battery cables are clean and tight. The battery terminal bolts should be torqued as specified in *Fastener Tightening Specifications on page 9-7*.

⇒ **If the battery cables need to be cleaned or tightened**

Clean as required and tighten as specified.

⇓ **If the battery cables are clean and tight**

3. Disconnect battery from the vehicle. There is no need to remove the battery from the vehicle.
4. Connect the EL-50313 directly to the battery terminal posts.
5. Select "Charging," "Diagnostic" and "Out of Vehicle" when setting up the test.
6. Select the proper battery type, Flooded, AGM, Spiral AGM or Stop/Start AGM.
7. Enter the CCA as shown on the battery label.
8. Verify the test result is not REPLACE BATTERY or BAD CELL-REPLACE

Note: Always write the test code displayed by the tester on the repair order for any warranty purposes. The number is a unique code that describes the test data for a particular battery at a particular time. The test code may occasionally

repeat when you retest the same battery. More often, each test will result in a different code. Use the test code from the Out of Vehicle test.

⇒ **If the test result is REPLACE BATTERY or BAD CELL-REPLACE**

Replace the C1 Battery.

⇓ **If the test result is not REPLACE BATTERY or BAD CELL-REPLACE**

9. All OK.

Repair Instructions

Perform the *Diagnostic Repair Verification on page 6-123* after completing the repair.

Battery Replacement on page 9-28

Battery Charging

12 V Battery

The following procedure is for the 12 V battery only.

Special Tools

EL 50313 Midtronics GR8 Battery Tester Charger

For equivalent regional tools, refer to *Special Tools on page 9-37*.

Diagnostic Aids

Note: This vehicle is equipped with an Absorbent Glass Matt Battery. This type of battery requires different charging and testing parameters than the more common regular flooded lead acid type battery. ANY time you perform charging and or testing you MUST set up the charging/testing equipment or permanent damage to the battery may result.

- The charging area should be well ventilated.
- Do not charge a battery that appears to be frozen. Allow the battery to warm to room temperature and test it using the EL 50313 before charging.
- An AGM battery may be damaged if charged to more than 14.5 V.
- A Flooded Cell battery may be damaged if charged to more than 16.5 V.
- Vehicles with dual batteries must be charged individually which will result in two printouts.

Battery State of Charge

Note: Using voltage to determine the battery's state of charge is only accurate after the battery has been at rest for 24 hours. This is enough time for the acid in each cell to equalize. If the battery has been charged or discharged in the past 24 hours, the battery state of charge will only be an estimate.

The maintenance-free batteries state of charge is estimated by reading the voltage of the battery across the battery terminals. Because the voltage is affected by current flow into or out of the battery, the engine must be stopped and all electrical loads turned OFF, including parasitic loads, when checking the voltage. The voltage can also be affected if the battery has just been charged or discharged, so it is important to consider what has happened to the battery in the time just before testing. Use the following procedure to determine the battery's state of charge:

1. Be sure all electrical loads are turned OFF.
2. Determine whether the battery has been used in a vehicle or charged within the past 12 hours.
   - If the answer is no, the terminal voltage will be stabilized and no action is necessary before reading the voltage. Skip to step 3.
   - If the answer is yes, terminal voltage will not be stabilized and you should wait 12 hours since the last time the battery was used.
3. Estimate the battery temperature by determining the average temperature to which the battery has been exposed for the past 12 hours.

   Note: The table is accurate to 10 percent only after the battery has been at rest for 12 hours.
4. Measure the battery voltage at the battery terminals. Refer to the following table to determine the state of charge according to the estimated battery temperature:

Battery Voltage	% Charge at 0°C (32°F)	% Charge at 25° C (75°F)
12.75 V	100%	100%
12.7 V	100%	90%
12.6 V	90%	75%
12.45 V	75%	65%
12.2 V	65%	45%
12.0 V	40%	20%

Use the state of charge information as follows:

- A battery with a state of charge that is below 65 percent must always be recharged before returning it to service or continuing storage.
- A battery with a state of charge that is 65 percent or greater is generally considered to be charged enough in order to be returned to normal service or in order to continue storage. However, if the battery is being used in slow traffic or with short drive times, or if the temperature is very hot or very cold, the battery should be fully charged, to at least 90 percent, before returning it to service or continuing storage.

Charging Time Required

The time required to charge a battery will vary depending upon the following factors:

- The battery charger capacity—The higher the charger amperage, the less time it will take to charge the battery.
- The state of charge of the battery—A completely discharged battery requires more than twice as much charging time as a half charged battery. In a discharged battery with a voltage below 11 V, the battery has a very high internal resistance and may only accept a very low current at first. Later, as the charging current causes the acid content to increase in the electrolyte, the charging current will increase. Extremely discharged batteries may

not activate the reversed voltage protection in some chargers. Refer to the manufacturer's instructions for operating this circuitry.

- The temperature of the battery—The colder the battery is, the more time it takes to recharge the battery. The charging current accepted by a cold battery is very low at first. As the battery warms, the charging current will increase.

Charging Procedure

Caution: Turn OFF the ignition when connecting or disconnecting the battery cables, the battery charger or the jumper cables. Failure to do so may damage the ECM/PCM or other electronic components.

Caution: Refer to *Fastener Caution on page 0-8*.

When charging side-terminal batteries with the battery cables connected, connect the charger to the positive cable bolt and to a ground located away from the battery. When charging side-terminal batteries with the battery cables disconnected, install the battery side terminal adapters and connect the charger to the adapters.

Use the following procedure to charge the battery:

1. Ensure that all of the battery terminal connections are clean and tight.
2. Connect the charger positive lead to the battery positive terminal on the battery or the remote jumper stud underhood.

Caution: Do not connect the negative charger lead to the housings of other vehicle electrical accessories or equipment. The action of the battery charger may damage such equipment.

3. Connect the negative charger lead to a solid engine ground or to a ground stud in the engine compartment that is connected directly to the battery negative terminal, but away from the battery. If the negative battery cable is disconnected and a terminal adapter is being used, connect directly to the adapter.
4. Select "Charging," "PDI" and "In Vehicle" when setting up the charger.
5. Select the proper battery type, Flooded, AGM, Spiral AGM or Stop/Start AGM.
6. Enter the CCA as shown on the battery label.

Battery Electrical Drain/Parasitic Load Test

12 V Battery

The following procedure is for the 12 V battery only.

Diagnostic Instructions

- Perform the *Diagnostic System Check - Vehicle on page 6-91* prior to using this diagnostic procedure.
- Review *Strategy Based Diagnosis on page 6-83* for an overview of the diagnostic approach.
- *Diagnostic Procedure Instructions on page 6-84* provides an overview of each diagnostic category.

Circuit/System Description

Components most likely to cause a parasitic draw on the vehicle's battery are switches, relays, and control modules. After the vehicle is turned OFF the control modules will begin to go to sleep (shut OFF). All control modules do not go to sleep at the same time, some may take up to 30 minutes or longer after turning the Vehicle OFF before going to sleep, like the HVAC and body control modules. Others such as the telematics communication interface control module and remote control door lock receiver may periodically wake up then go back to sleep. These are all normal conditions.

Diagnostic Aids

- Rule out any possible aftermarket equipment causing an unacceptable parasitic current drain. Aftermarket accessories installed into the courtesy lamp circuit can cause the inadvertent power timer in the body control module (BCM) to keep resetting. This would cause the BCM to remain awake and cause a current drain on the battery.
- Rule out customer driving habits such as regular short trips that do not allow enough time to properly charge the battery. Refer to *Battery Description and Operation on page 9-34*.
- Verify that the battery and charging system are in proper working order. Refer to *Battery Charging on page 9-16* and *Charging System Test on page 9-19*.
- A battery discharging for no apparent reason while the vehicle is parked can be caused by an intermittent draw, such as a module waking up, or a continuous draw, such as a dome light or stuck relay.
- Some systems and modules such as OnStar®, and regulated voltage control, if equipped, are designed to wake-up, perform a task, and go back asleep at regular intervals. Refer to *Body Control System Description and Operation on page 11-237* for the system or modules description and operation.
- An engine off natural vacuum evaporative test can occur if the engine control module (ECM) determines the drive cycle has met the appropriate criteria immediately after key off. The ECM will stay awake and the vent solenoid will stay energized for as long as 45 minutes. The typical current draw for this is about 1 A.
- The telematics communication interface control module current draw is very low, less than 40 mA, so the OnStar system is left in that "awake" state for up to the first 48 hours. Parasitic draw of up to 40 mA with an occasional spike as high as 80 mA through the telematics communication interface control module for the first 48 hours is normal.
- Some automatic climate control systems can remain in a semi-awake state for up to three hours, actual draw amounts vary by vehicle platform but are typically not greater than 50 mA.
- An extremely low mA current level is consumed by the RKE receiver for monitoring purposes, actual system wake up only occurs when the fobs for the vehicle are used. When other devices on the same RKE operating frequency are activated,

such as the 4 tire pressure monitoring sensors and other vehicle transmitters in the vicinity, the RKE receiver will have a 100 mA spike. These spikes are normal and occur too briefly to have a significant effect on battery drain. Competing signals may cause RKE performance issues such as jamming but should not cause excessive battery draw.

- If an excessive current draw is not present during initial testing, continue periodic testing over a 1-2 hour period to see if the current draw increases and stays above an unacceptable level.

  Note: The battery specification listed below is a generic specification. Refer to the battery specification label on the original battery when testing the battery.

- The battery run down time will vary depending on the batteries reserve capacity. If the reserve capacity is higher, then the battery run down time would be longer. If the reserve capacity is lower, then the battery run down time would be shorter. The graph below indicates roughly how many days a 690 cold cranking amp battery with a 110 minute reserve capacity starting at 80 percent state of charge will last with a constant current draw until it reaches 50 percent state of charge. Differences in battery reserve capacity and temperature will affect the results.

Current Drain	Days
25 mA	33
50 mA	16.5
75 mA	11
100 mA	8.25
250 mA	3.3
500 mA	1.65
750 mA	1
1 A	0.8
2 A	0.4

Reference Information

Schematic Reference

Control Module References on page 6-3

Connector End View Reference

Component Connector End Views on page 11-455

Electrical Information Reference

- *Circuit Testing on page 11-871*
- *Testing for Intermittent Conditions and Poor Connections on page 11-877*
- *Connector Repairs on page 11-895*
- *Wiring Repairs on page 11-883*

Scan Tool Reference

Control Module References on page 6-3 for scan tool information

Special Tools

EL 38758 Parasitic Draw Test Switch

For equivalent regional tools, refer to *Special Tools on page 9-37*.

Circuit/System Verification

Note:

- Most vehicle systems will go to sleep within 30 min but it can take up to 2 hours before all systems power down allowing the parasitic draw test to pass. An occasional increase in the parasitic draw is normal as long as it returns within 1 s.
- Closing the door latches/ajar switch while leaving the doors open is recommended, this allows the vehicle systems to perform in a "doors closed" mode while allowing vehicle interior access that may be needed to complete the diagnostic steps.
- Locking doors will arm the vehicle content theft deterrent system if equipped. Failure to arm the system may cause a theft system fault to not be present during testing.
- There are many things that can prevent the vehicle from completely going to sleep and passing the parasitic draw test. Make sure all the conditions listed below are met before performing the parasitic current draw test.
  - Vehicle OFF
  - Retained Accessory Power RAP OFF - open and close the driver door after Vehicle OFF
  - Scan tool not communicating with a vehicle control module - in some cases it may need to be disconnected from the data link connector.
  - All access doors closed
  - Headlamps OFF - auto headlamps disabled
  - Any delay lighting OFF
  - If equipped with an under hood lamp disable it
  - HVAC after blow OFF
  - Any accessory that can work with Vehicle OFF inactive or OFF
  - Wait up to 2 min or longer, after all other listed conditions are met

Using an Inductive Pickup Probe

1. Connect an inductive pickup probe to the negative battery cable that can read down to 1 mA.
2. Vehicle OFF, as the vehicle systems shut down test for less than 30 mA of parasitic current drain.
   ⇒ If greater than the specified range, refer to Circuit/System Testing.

Using the EL 38758 Parasitic Draw Test Switch

Warning: Refer to Battery Disconnect Warning on page 0-4.

Caution: When a fused jumper wire or digital multimeter is connected to the test switch terminals, always turn the test switch ON before opening any access door, turning the ignition on, or turning any accessory on. This is to prevent damaging the jumper wire or digital multimeter fuse.

Note: The switch knob on the *EL 38758* switch is marked ON and OFF. When the switch knob is in the ON position, the circuit is closed and electrical current will pass through the switch. When the switch knob is in the OFF position, the circuit is open and electrical current will not pass through the switch.

1. Vehicle OFF, disconnect the battery negative cable from the battery. Refer to *Battery Negative Cable Disconnection and Connection on page 9-20*.
2. Turn the *EL 38758* switch knob to the OFF position.
3. Install the male end of the *EL 38758* switch to the battery ground terminal.
4. Install the battery negative cable to the female end of the *EL 38758* switch.
5. Turn the *EL 38758* switch knob to the ON position.
6. Road test the vehicle and activate all of the accessories such as the radio and air conditioning.
7. Vehicle OFF, connect a 10 A fused jumper wire to the test switch tool terminals.
8. Turn the *EL 38758* switch knob to the OFF position. The current now flows through the jumper wire.
9. Check the fuse in the jumper wire. The fuse should be OK.
   - ⇒ Failed: If the jumper wire fuse is blown, refer to Circuit/System Testing.
   - ⇓ Passed
10. Turn the *EL 38758* switch knob to the ON position. Remove the fused jumper wire.
11. Connect a digital multimeter set to the 10 A DC scale between the test switch tool terminals.
12. Turn the *EL 38758* switch knob to the OFF position. The current now flows through the DMM.
13. As the vehicle systems shut down test for less than 30 mA of parasitic current drain.
    - ⇒ If greater than the specified range, refer to Circuit/System Testing.

Circuit/System Testing

Note:

- Removing or installing a fuse, relay, or connector, to determine the area causing high parasitic draw may wake up control modules. You must wait for the control modules to go back to sleep before retesting. It is best to install any removed or disconnected components after the diagnosis is completed.
- Fuses for power mode master components such as the BCM should be removed last to avoid misdiagnosis.
- If a scan tool is connected to the DLC, either disconnect it or subtract the scan tool current draw from the DMM reading to get the actual vehicle parasitic current draw.

If the vehicle has an unacceptable amount of parasitic current draw, remove each fuse one at a time until the current draw falls to an acceptable level. A drop of more than 10-20 mA, when disabling a single system or circuit, is an indication of an overly high current draw that could be causing the battery drain. Refer to *Power Distribution Schematics on page 11-314* to diagnose exactly which circuit of the suspect system is causing the high parasitic drain. The follow is a list of common components that could cause a high current draw:

- Stuck switch
- Stuck relay
- Control module

Repair Instructions

Perform the *Diagnostic Repair Verification on page 6-123* after completing the diagnostic procedure.

Control Module References on page 6-3 for control module replacement, programming and setup

Charging System Test

The accessory power module (APM) supplies the energy that flows between the high voltage (300 volt) direct current (DC) and low voltage (14 volt) DC to charge the 12 volt battery and power accessories. To test the charging system, refer to *DC Power Conversion Test on page 9-169*.

Repair Instructions

Battery Negative Cable Disconnection and Connection

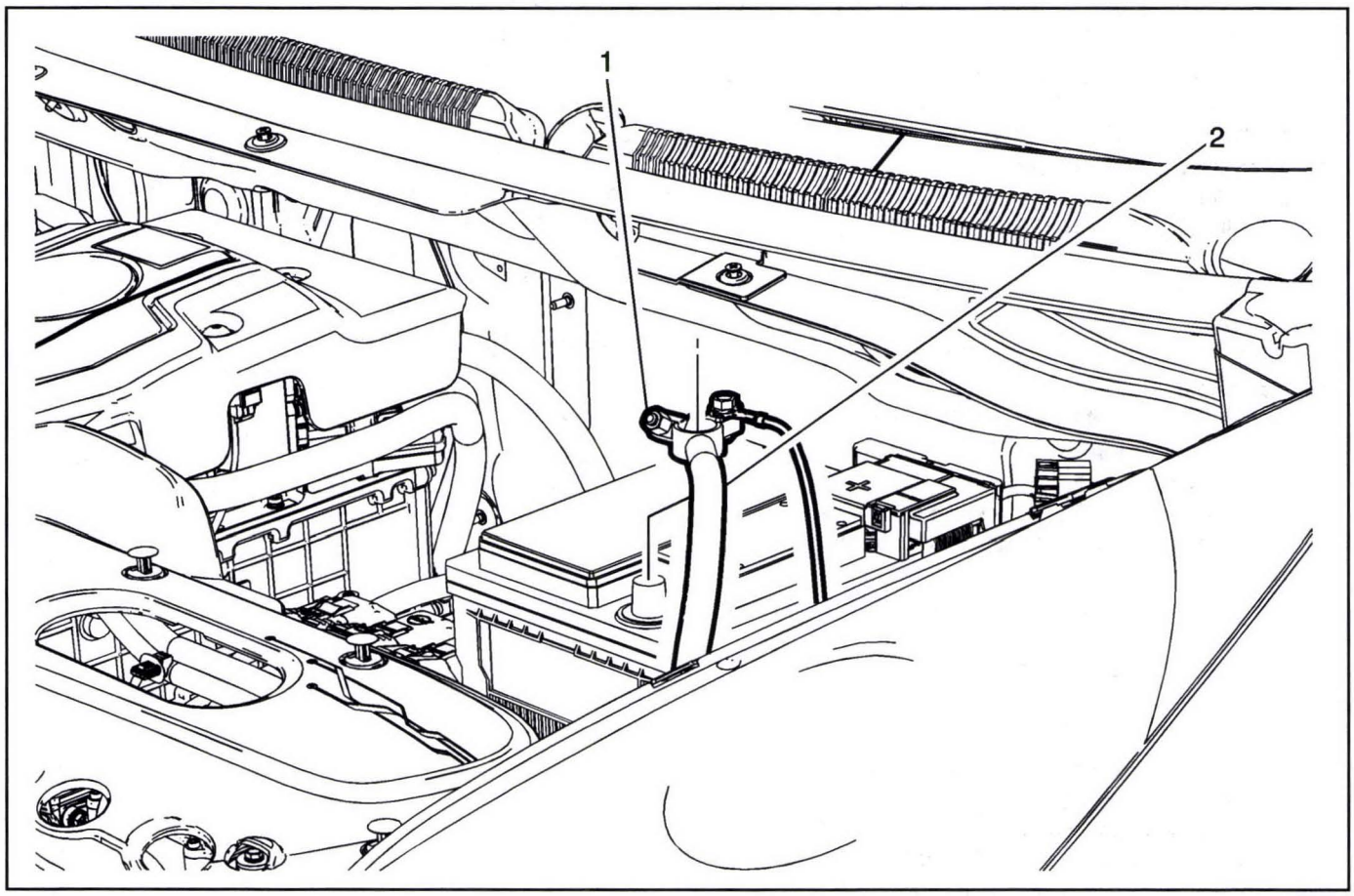

2917976

Battery Negative Cable Disconnection and Connection

Callout	Component Name
Preliminary Procedures 1. Turn the ignition OFF. 2. Record radio and engine oil life resets.	
1	Battery Negative Cable Fastener ***Warning: Refer to Battery Disconnect Warning on page 0-4.*** **Caution:** Refer to *Fastener Caution on page 0-8*. **Tighten** 5 N•m (44 lb in)
2	Battery Negative Cable

Battery Current Sensor Replacement

Removal Procedure

1. Disconnect the battery negative cable from the battery. Refer to *Battery Negative Cable Disconnection and Connection on page 9-20*.

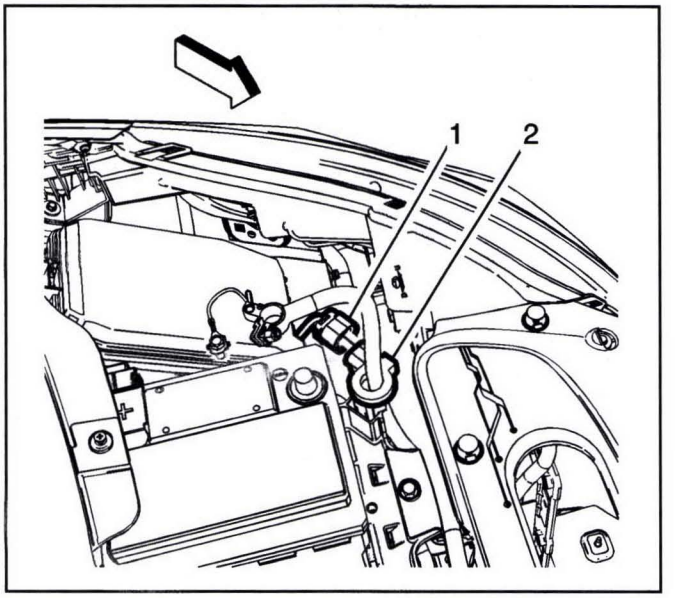

2917959

2. Disconnect the connector (1) to the battery current sensor (2) and remove the battery current sensor from the battery tray.

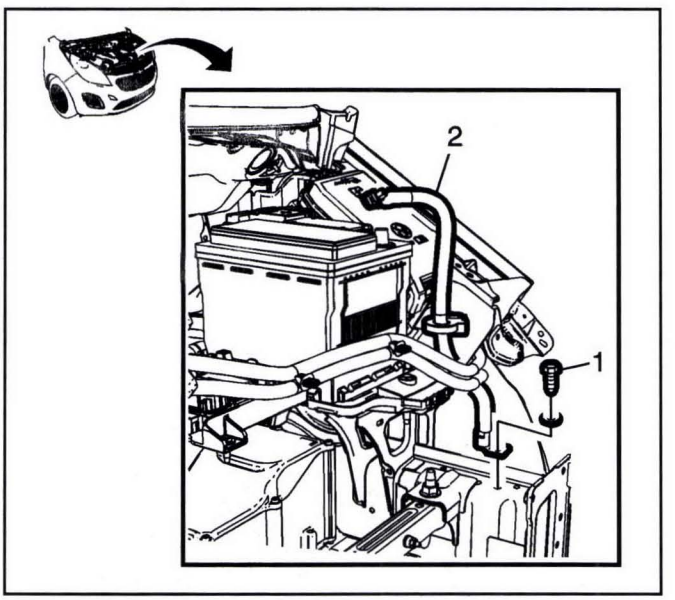

2917958

3. Remove the battery negative ground cable fastener (1) and the battery negative cable (2), from the frame rail.

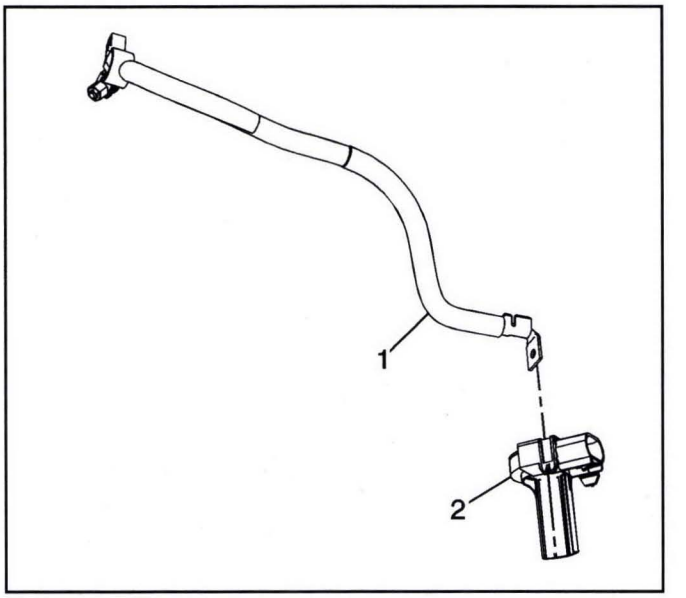

2917957

Note: Note the orientation of the battery current sensor when removing.

4. Remove the battery current sensor (2) from the battery negative cable (1).

Installation Procedure

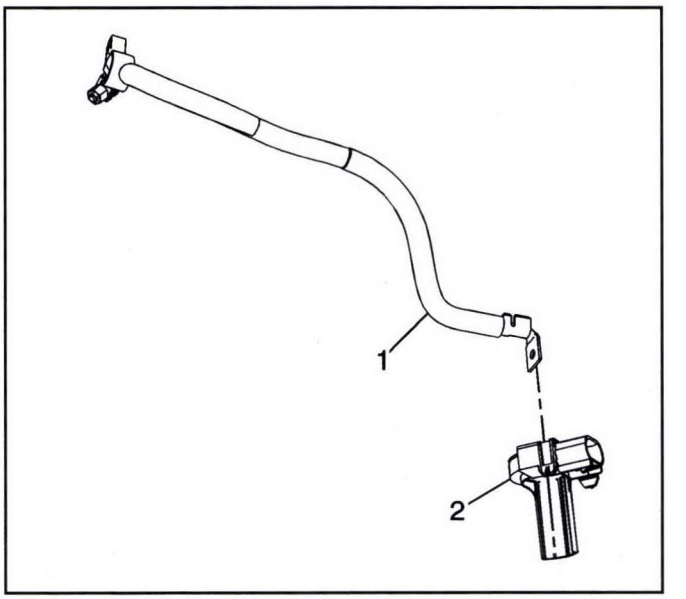

2917957

1. Install the battery current sensor (2) onto the battery negative cable (1) as shown .

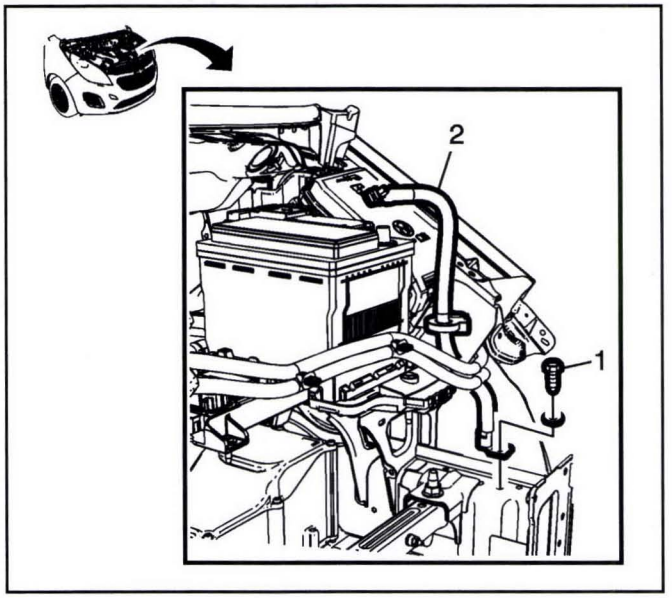

2917958

Caution: Refer to *Fastener Caution on page 0-8*.

2. Install the battery negative cable (2) to the frame rail and tighten the fastener (1) to **9 N•m (80 lb in)**.

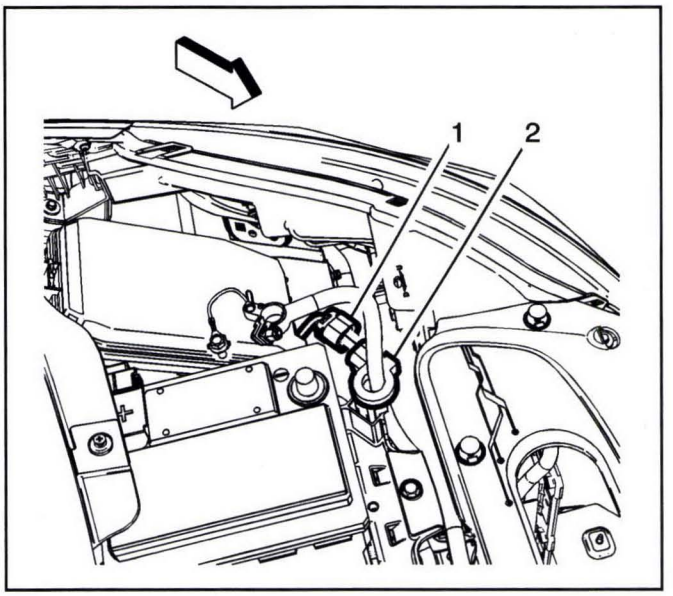

2917959

3. Connect the body harness connector (1) to the battery current sensor and install the battery current sensor to the battery tray.
4. Connect the battery negative cable to the battery. Refer to *Battery Negative Cable Disconnection and Connection on page 9-20*.
5. Insert the ignition key and turn the ignition to the ON position.
6. Program all of the customer's radio station presets and set the radio clock to the current time.

Battery Negative Cable Replacement

Removal Procedure

1. Disconnect the battery negative cable from the battery. Refer to *Battery Negative Cable Disconnection and Connection on page 9-20*.

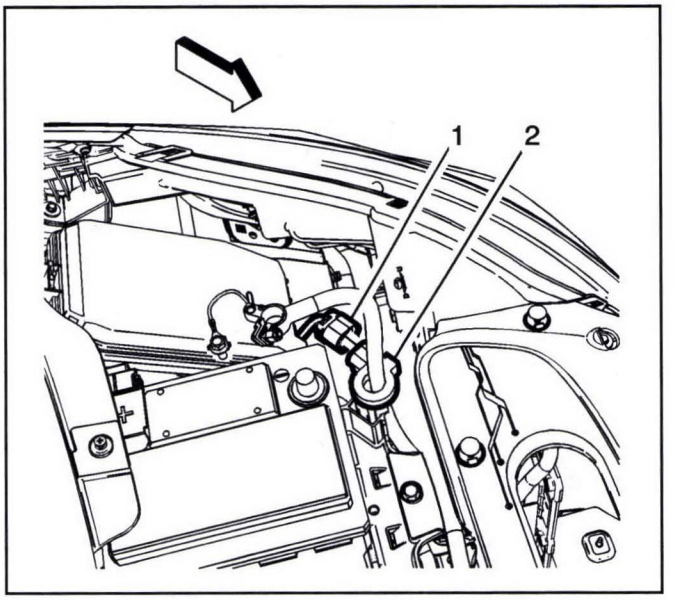

2917959

2. Disconnect the connector (1) to the battery current sensor (2) and remove the battery current sensor from the battery tray.

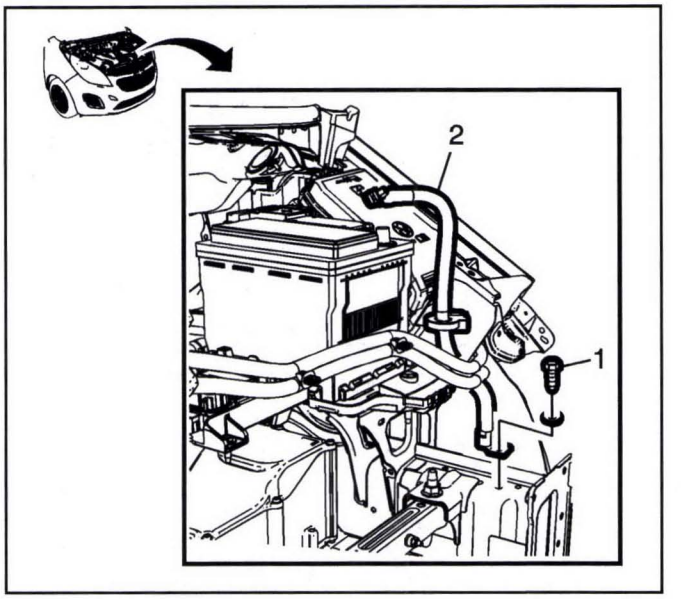

2917958

3. Remove the battery negative ground cable fastener (1) and the battery negative cable (2), from the frame rail.

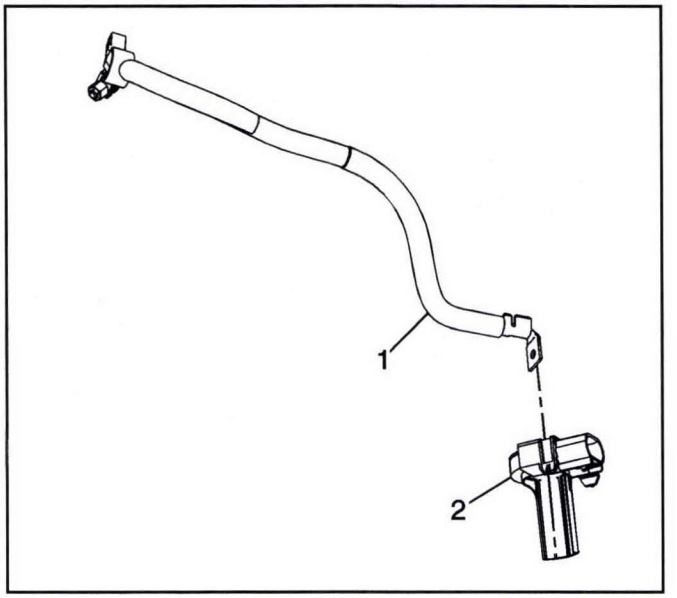

2917957

Note: Note the orientation of the battery current sensor when removing.

4. Remove the battery current sensor (2) from the battery negative cable (1).

Installation Procedure

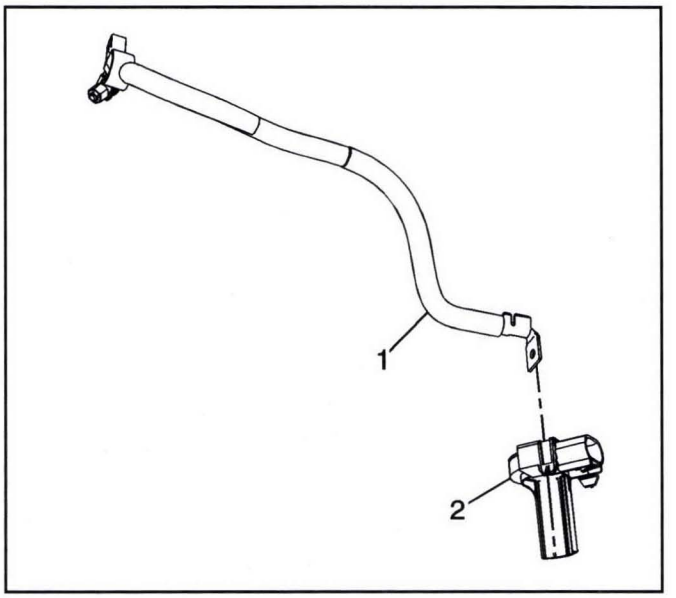

2917957

1. Install the battery current sensor (2) onto the battery negative cable (1) as shown .

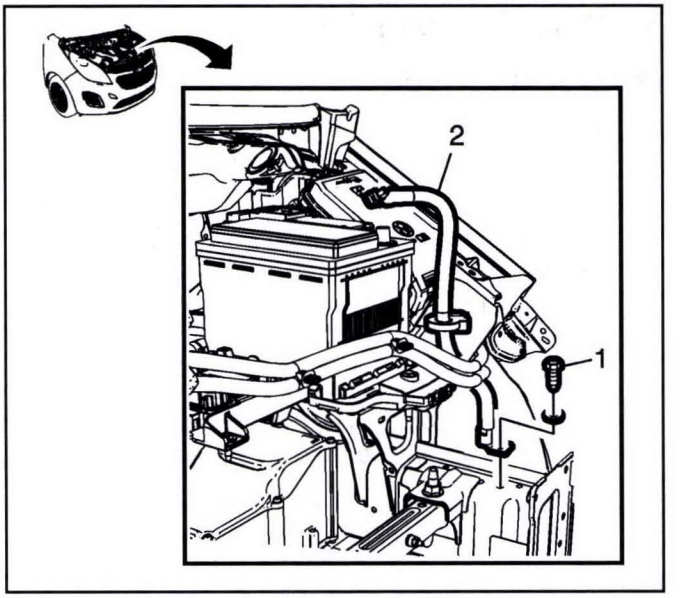

2917958

Caution: Refer to *Fastener Caution on page 0-8*.

2. Install the battery negative cable (2) to the frame rail and tighten the fastener (1) to **9 N•m (80 lb in)**.

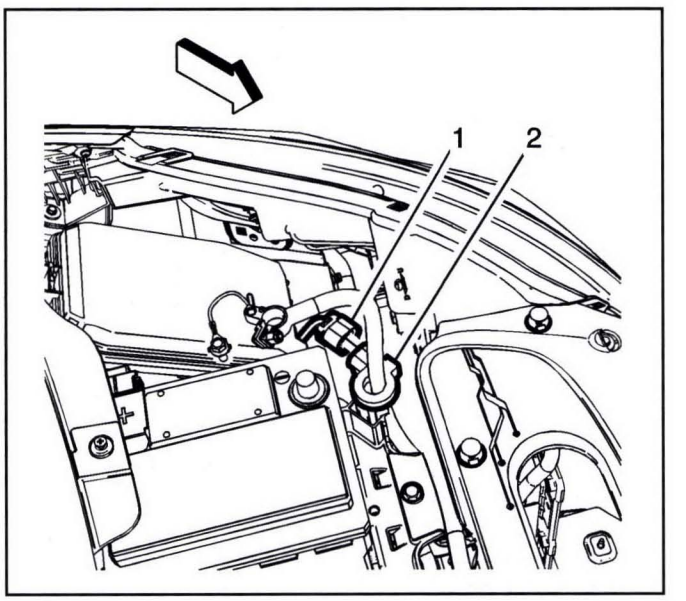

2917959

3. Connect the body harness connector (1) to the battery current sensor and install the battery current sensor to the battery tray.
4. Connect the battery negative cable to the battery. Refer to *Battery Negative Cable Disconnection and Connection on page 9-20*.
5. Insert the ignition key and turn the ignition to the ON position.
6. Program all of the customer's radio station presets and set the radio clock to the current time.

Battery Positive Cable Replacement

Removal Procedure

1. Disconnect the negative battery cable. Refer to *Battery Negative Cable Disconnection and Connection on page 9-20*.
2. Remove the front compartment front sight shield. Refer to *Front Compartment Front Sight Shield Replacement on page 3-39*.
3. Remove the high voltage disconnect circuit connector cover. Refer to *High Voltage Disconnect Circuit Connector Cover Replacement on page 9-174*.
4. Remove the plenum front panel. Refer to *Plenum Front Panel Replacement on page 3-38*.

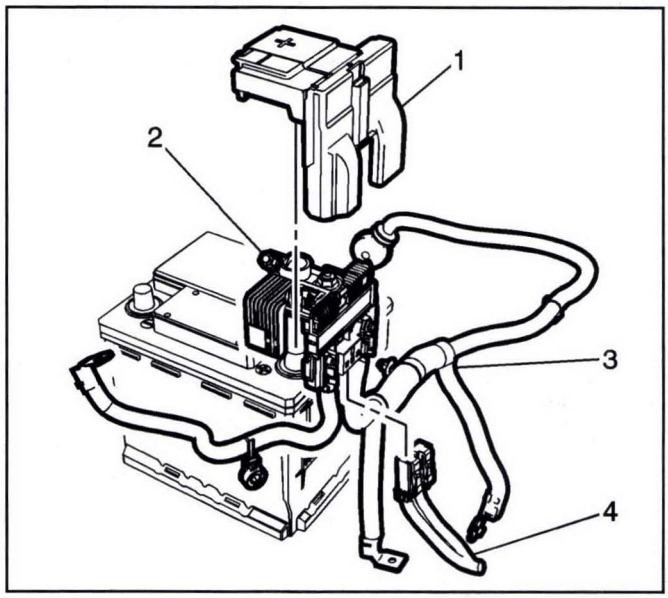

2917974

5. Remove the protective cover (1) from the battery positive cable.
6. Remove the battery positive cable clamp fastener (2) and detach the battery positive cable (3), from the battery post.
7. Disconnect the connectors (4) from the battery positive cable.

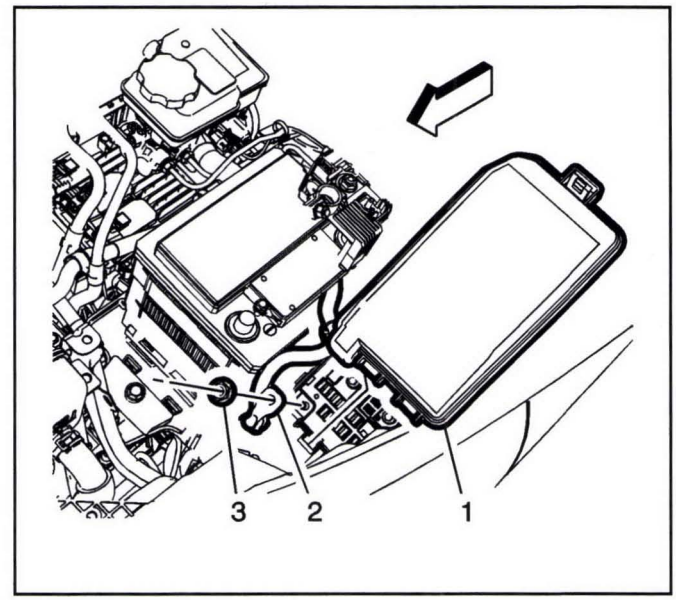

3213084

8. Remove the underhood fuse block cover (1) and set aside.
9. Remove the battery positive cable fastener (3) and remove the battery positive cable (2) from the underhood fuse block stud.

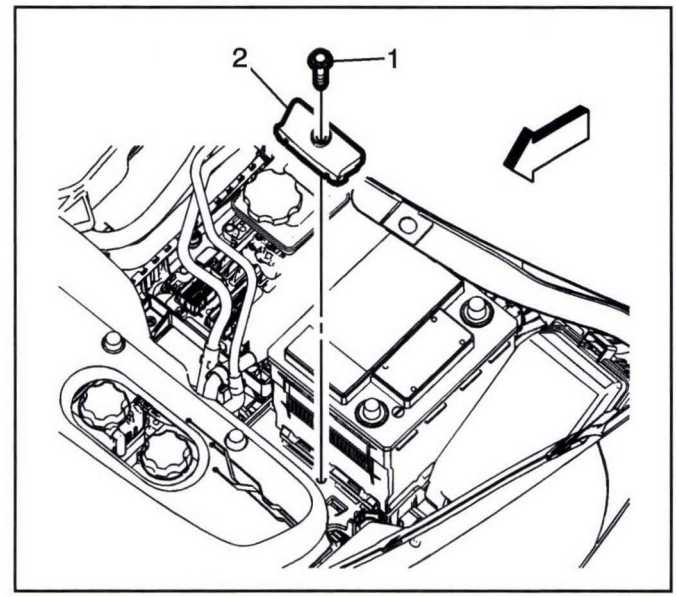

3213054

10. Remove the battery hold down retainer fastener (1) and remove the battery hold down retainer (2).

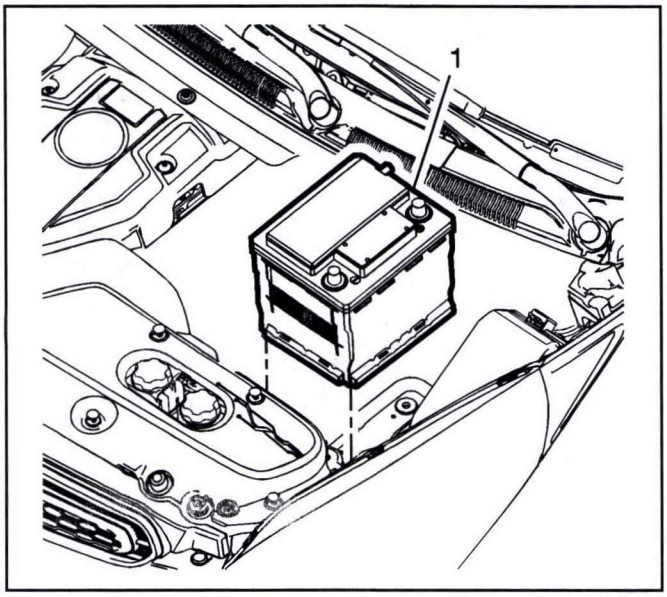

3213057

11. Remove the battery (1) from the engine compartment.

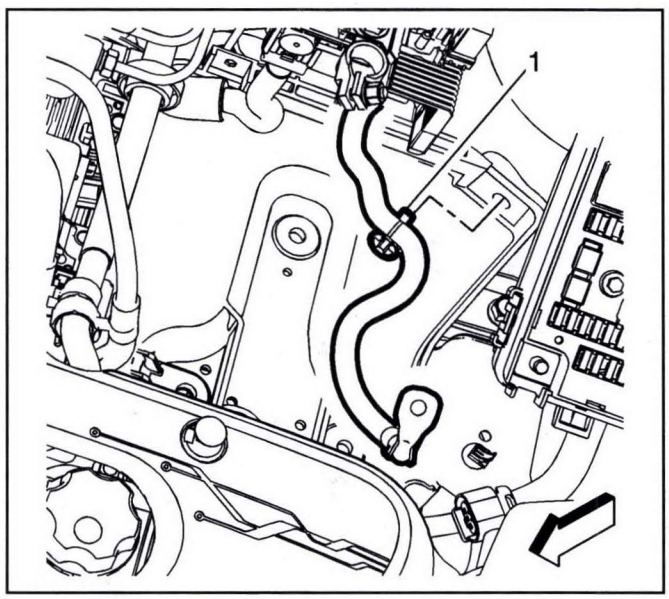

3213086

12. Detach the battery positive cable retainer (1) from the battery tray.

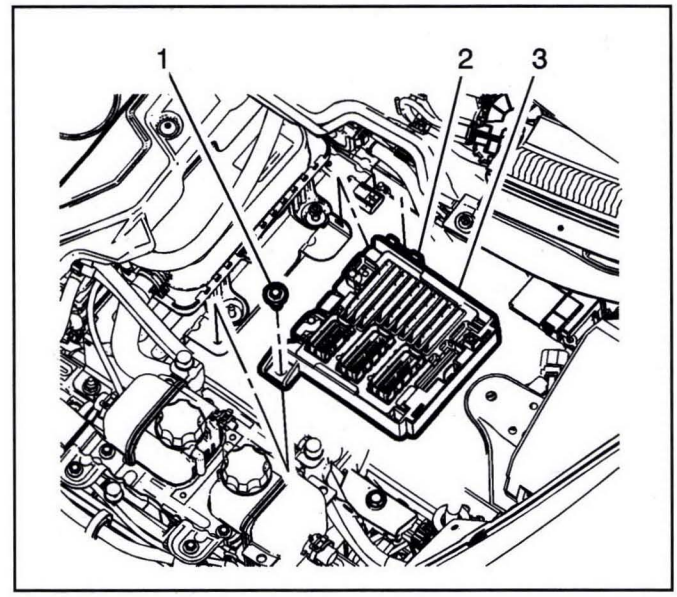

3232225

13. Remove the ECM module bracket fastener (1) and release the retaining tab (2). Refer to *Engine Control Module Bracket Replacement on page 9-172*.

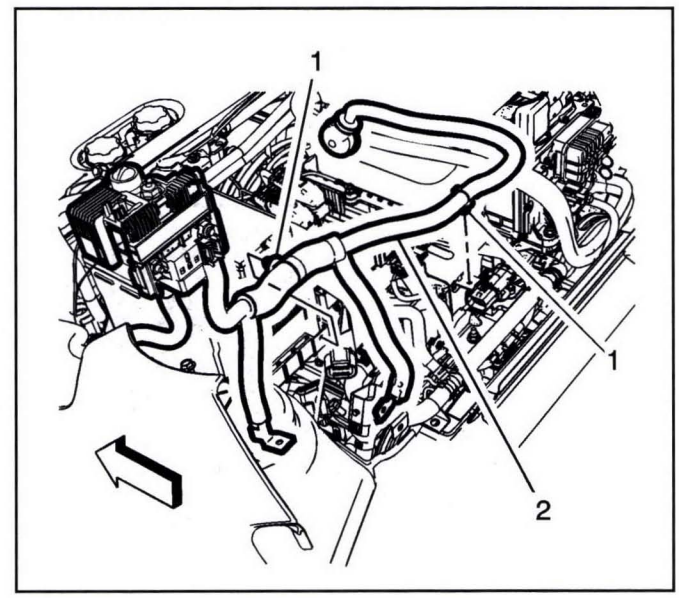

2917965

14. Detach the battery positive cable retainers (1) from the battery tray and bracket.
15. Remove the battery tray. Refer to *Battery Tray Replacement on page 9-30*.

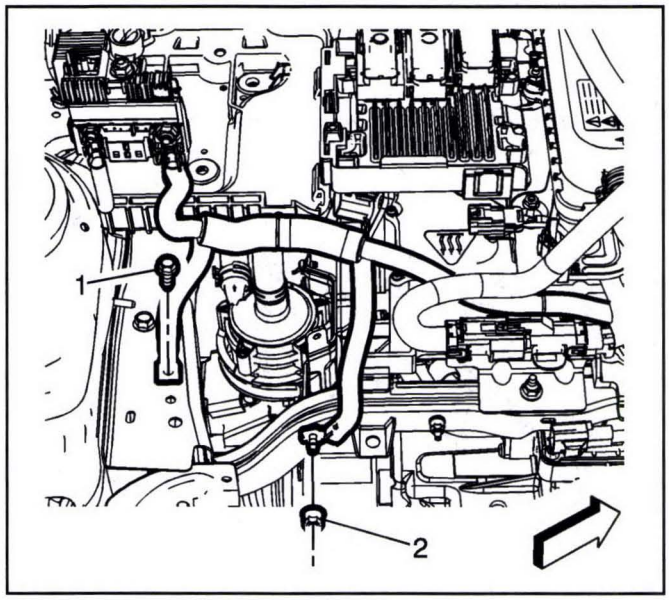

3344953

16. Remove the chassis frame ground fastener (1) and the drivetrain and front suspension frame ground fastener (2).
17. Remove the 4 heater coolant heater bracket fasteners and reposition the heater coolant heater and bracket assembly. Refer to *Heater Coolant Heater Bracket Replacement on page 10-75*.

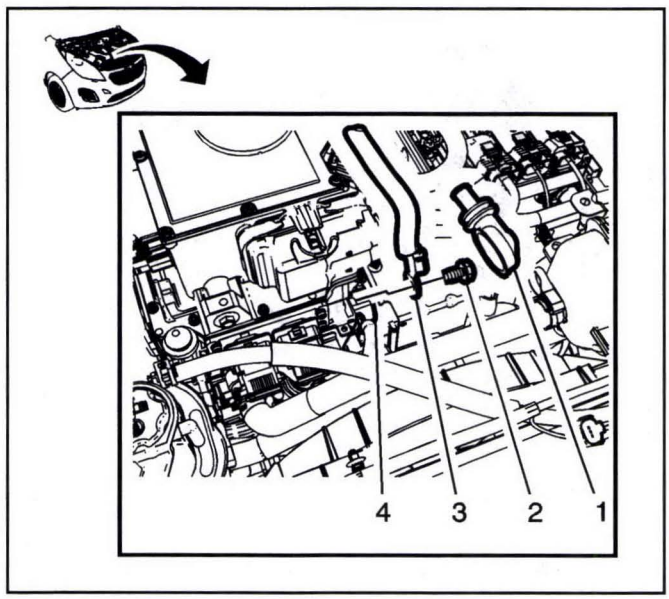

2917960

18. Remove the protective boot (1) on the battery positive cable (3).
19. Remove the battery positive cable fastener (2) and the battery positive cable (3), from the accessory DC power control module (4).

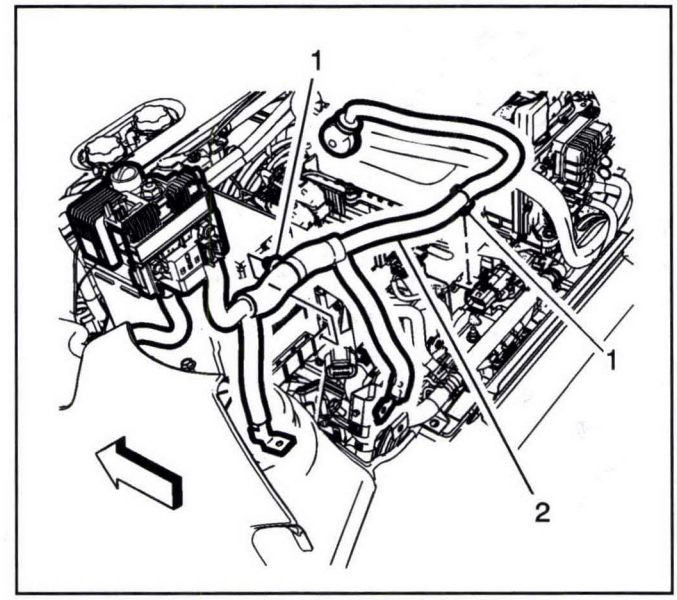

2917965

20. Remove the battery positive cable (2) from the vehicle.

Installation Procedure

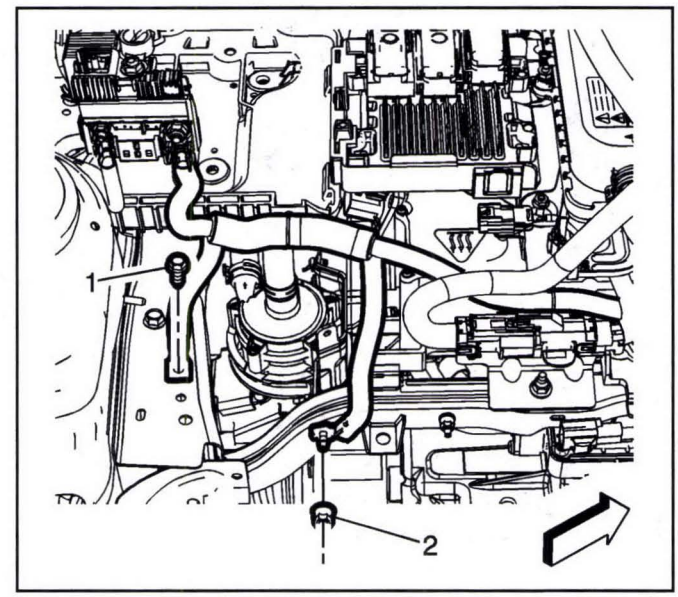

3344953

Caution: Refer to *Fastener Caution on page 0-8*.

1. Install the battery positive cable frame ground fastener (1) and tighten to **9 N•m (80 lb in)**.
2. Install the battery positive cable drivetrain and front suspension ground fastener (2) and tighten to **9 N•m (80 lb in)**.

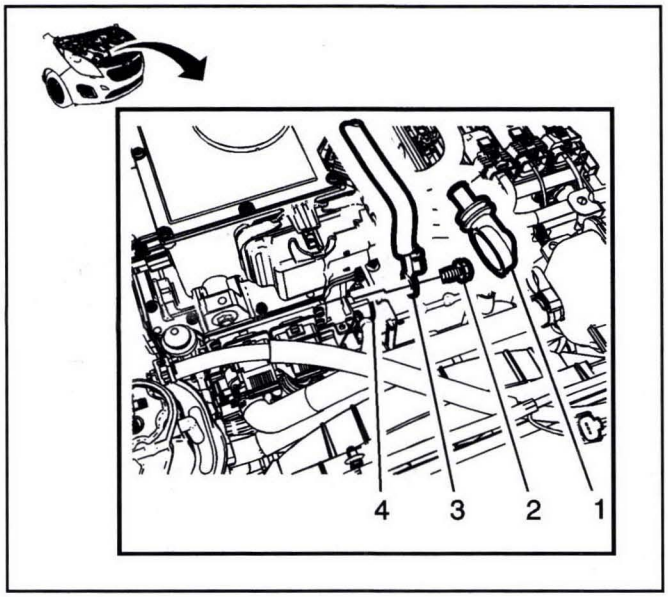

2917960

3. Install the battery positive cable (2) to the accessory DC power control module (4) and tighten the fastener (2) to **22 N•m (16 lb ft)**.
4. Install the protective boot (1) over the battery positive cable fastener (2).
5. Install the heater coolant heater bracket. Refer to *Heater Coolant Heater Bracket Replacement on page 10-75*.
6. Install the battery tray. Refer to *Battery Tray Replacement on page 9-30*.

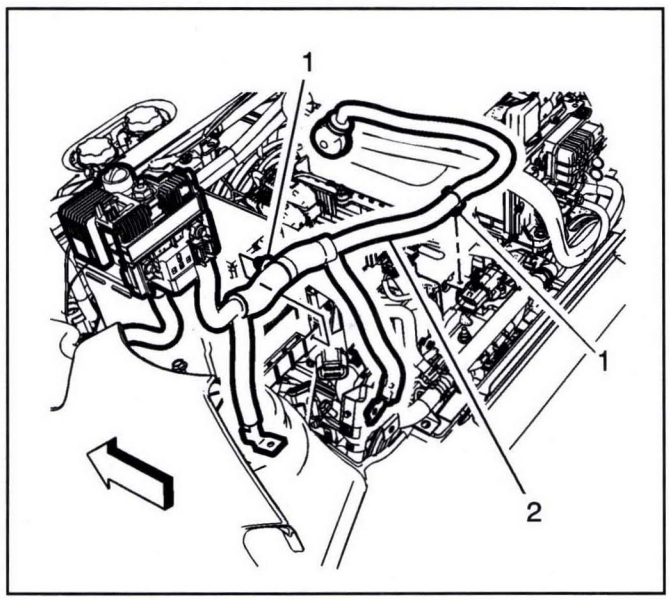

2917965

7. Attach the battery positive cable retainers (1) to the battery tray and bracket.

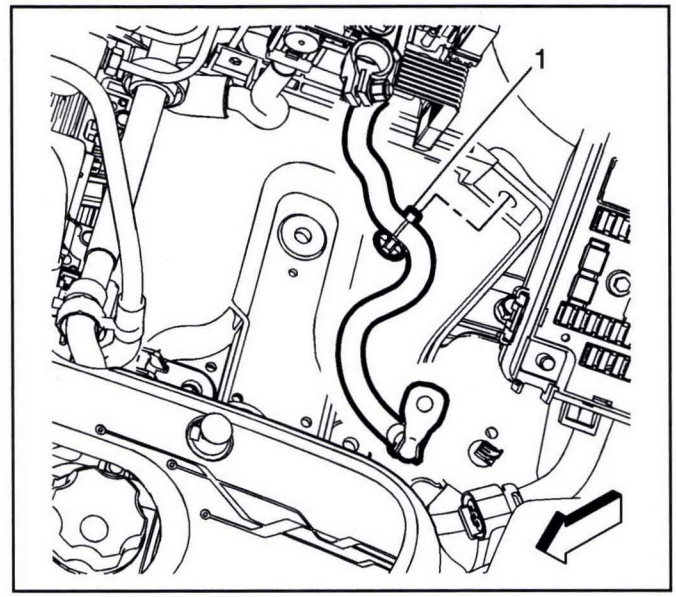

3213086

8. Install the battery positive cable retainer (1) to the battery tray.

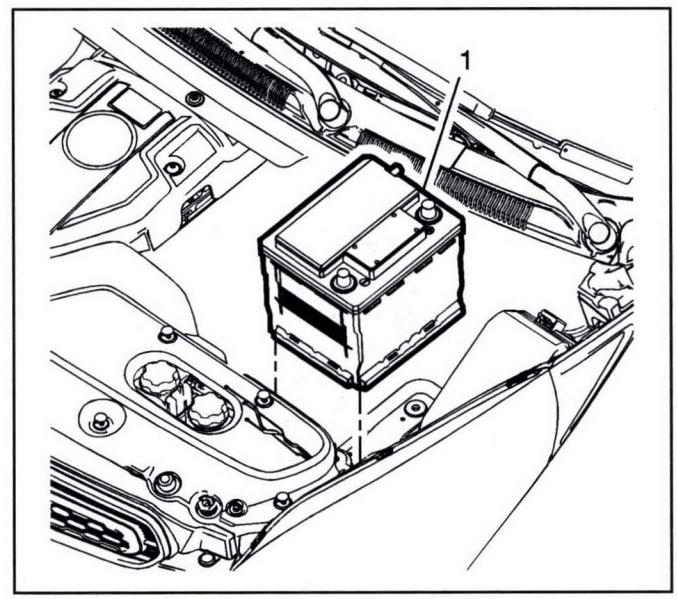

3213057

9. Install the battery (1) into position on the battery tray.

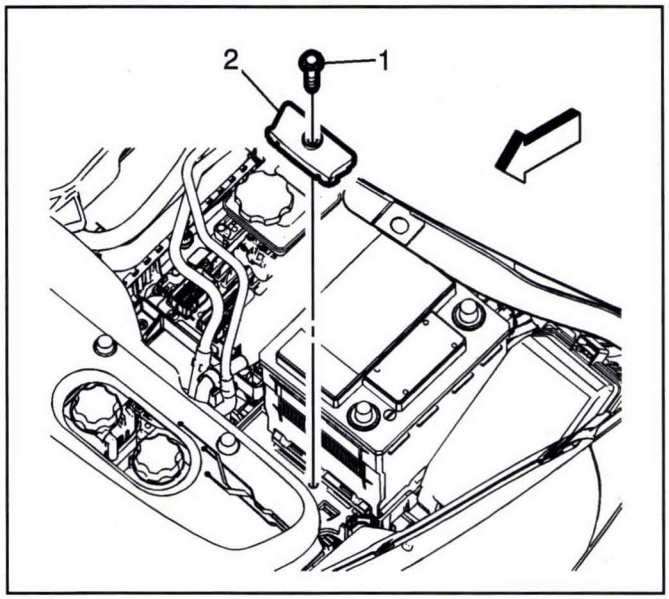

3213054

10. Install the battery hold down retainer (2) and tighten the fastener (1) to **8** N•m **(71 lb in)**.

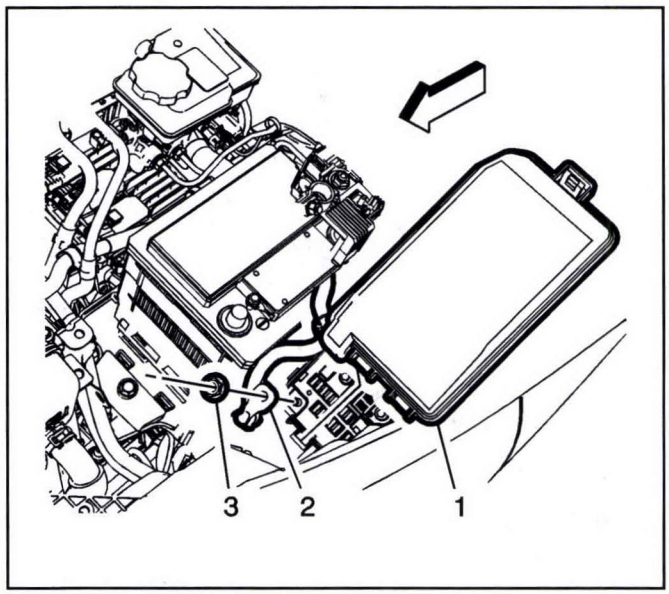

3213084

11. Install the battery positive cable (2) to the underhood fuse block stud and tighten the fastener (3) to **22** N•m **(16 lb ft)**.
12. Install the underhood fuse block cover (1).

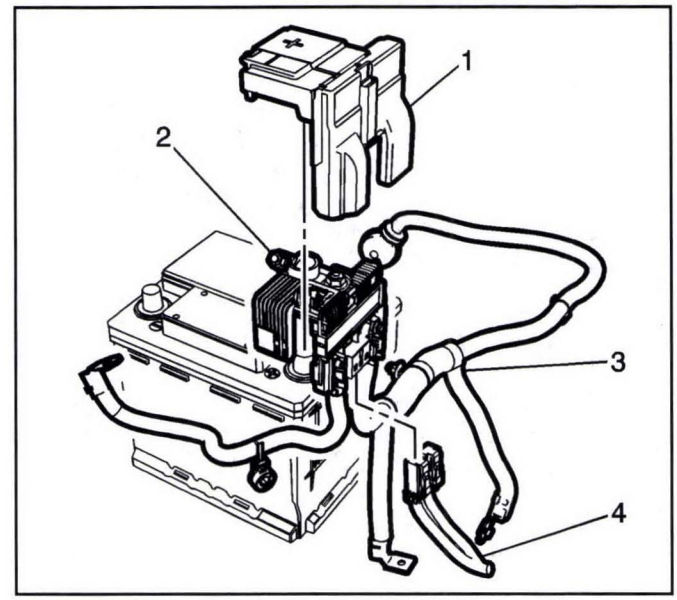

2917974

13. Connect the connectors (4) to the battery positive cable.
14. Install the battery positive cable to the battery post and tighten the clamp fastener (2) to **5** N•m **(44 lb in)**.
15. Install the protective cover (1) to the battery positive cable.
16. Install the plenum front panel. Refer to *Plenum Front Panel Replacement on page 3-38*.
17. Install the high voltage disconnect circuit connector cover. Refer to *High Voltage Disconnect Circuit Connector Cover Replacement on page 9-174*.
18. Install the front compartment front sight shield. Refer to *Front Compartment Front Sight Shield Replacement on page 3-39*.
19. Connect the negative battery cable. Refer to *Battery Negative Cable Disconnection and Connection on page 9-20*.

Battery Replacement

Removal Procedure

1. Disconnect the negative battery cable. Refer to *Battery Negative Cable Disconnection and Connection on page 9-20*.

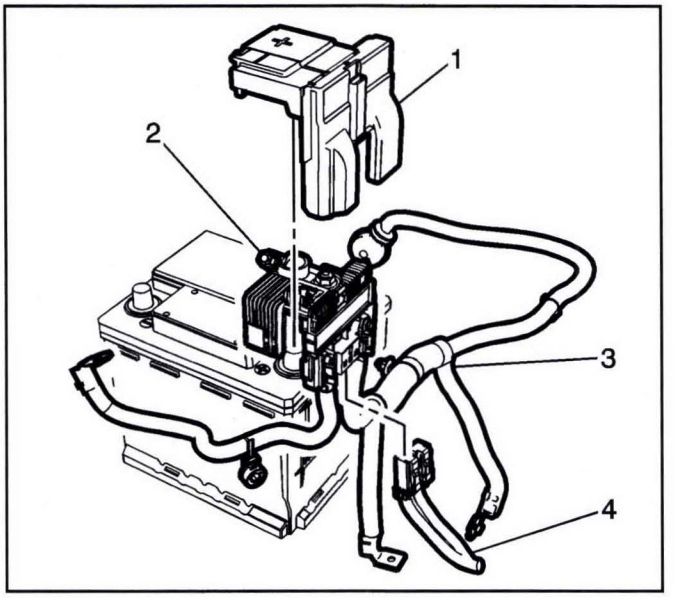

2917974

2. Remove the protective cover (1) from the battery positive cable.
3. Remove the battery positive cable clamp fastener (2) and detach the battery positive cable (3), from the battery post.

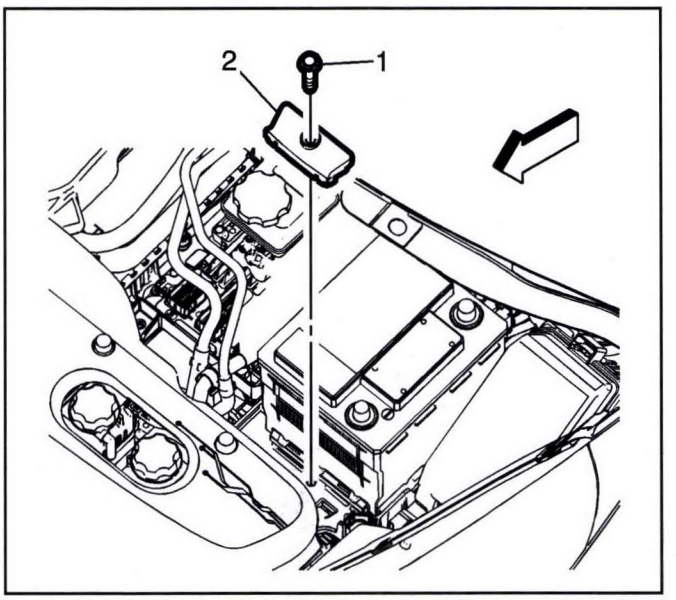

3213054

4. Remove the battery hold down retainer fastener (1) and remove the battery hold down retainer (2).

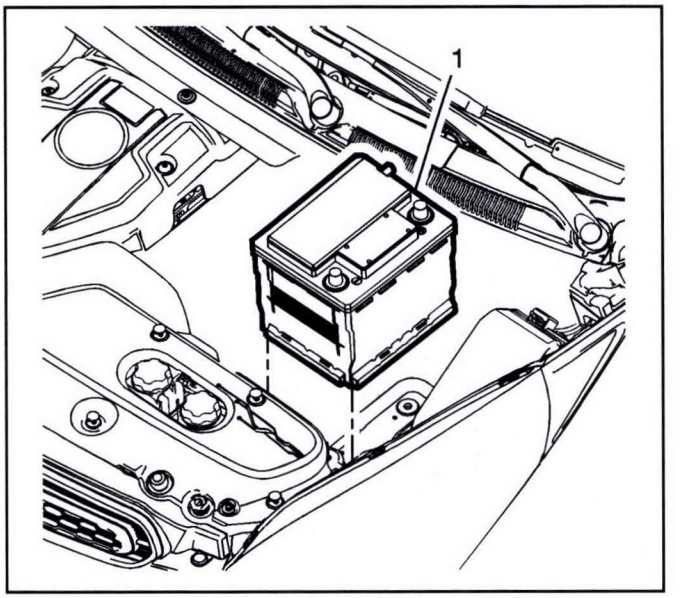

3213057

5. Remove the battery (1) from the vehicle.

Installation Procedure

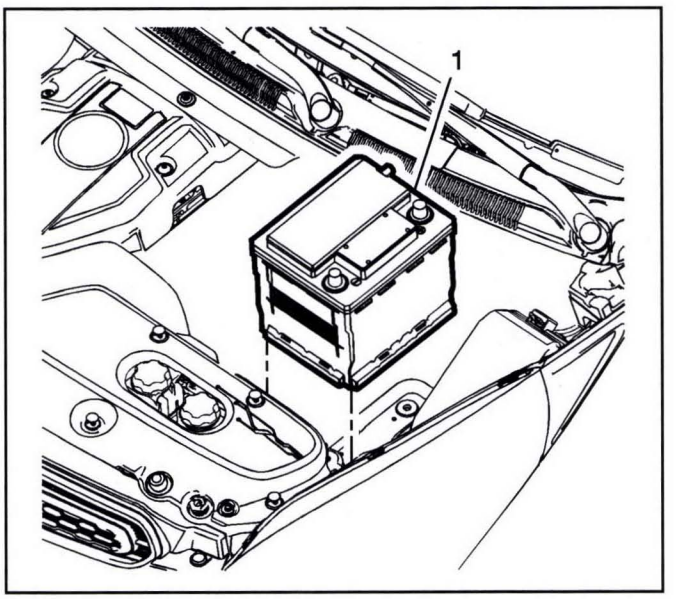

3213057

1. Install the battery (1) into position on the battery tray.

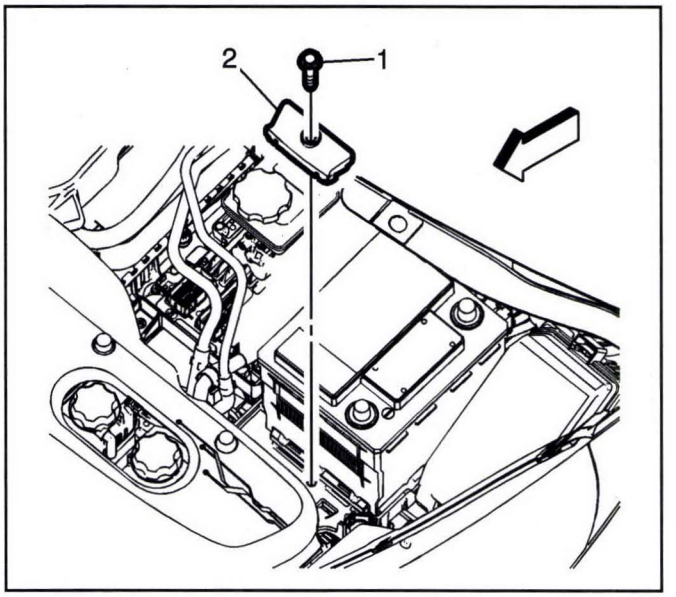

3213054

2. Install the battery hold down retainer (2) and tighten the fastener (1) to **8** N•m **(71 lb in)**.

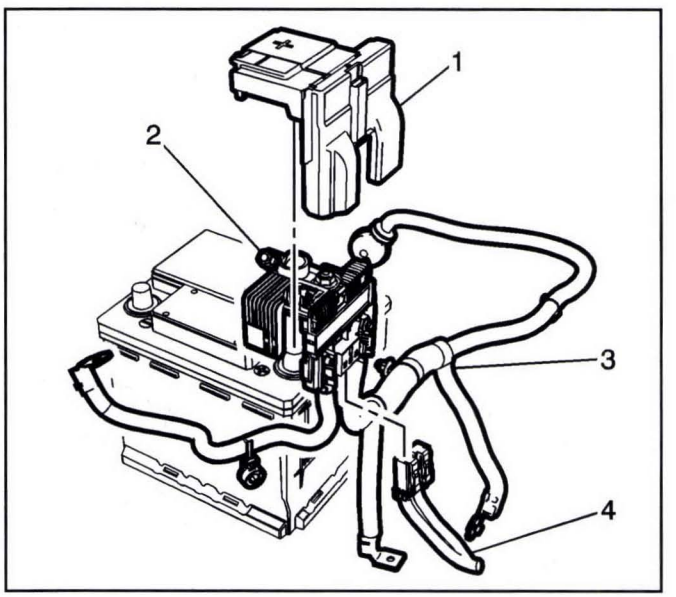

2917974

3. Install the battery positive cable to the battery post and tighten the clamp fastener (2) to **5** N•m **(44 lb in)**.
4. Install the protective cover (1) to the battery positive cable.
5. Connect the negative battery cable. Refer to *Battery Negative Cable Disconnection and Connection on page 9-20*.

Battery Tray Replacement

Removal Procedure

1. Disconnect the negative battery cable. Refer to *Battery Negative Cable Disconnection and Connection on page 9-20*.

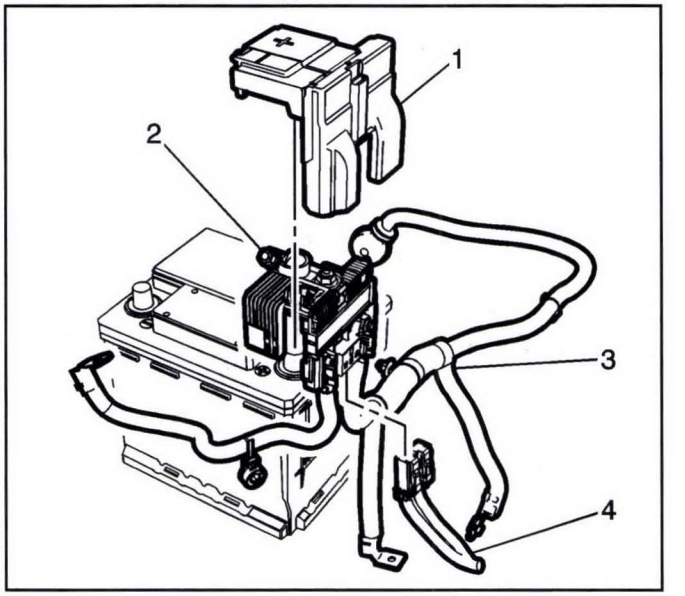

2917974

2. Remove the protective cover (1) from the battery positive cable.
3. Remove the battery positive cable clamp fastener (2) and detach the battery positive cable (3), from the battery post.

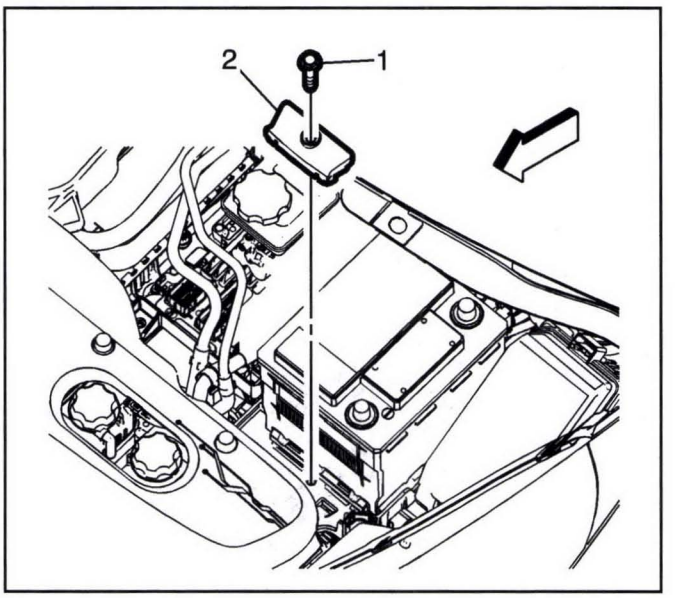

3213054

4. Remove the battery hold down retainer fastener (1) and remove the battery hold down retainer (2).

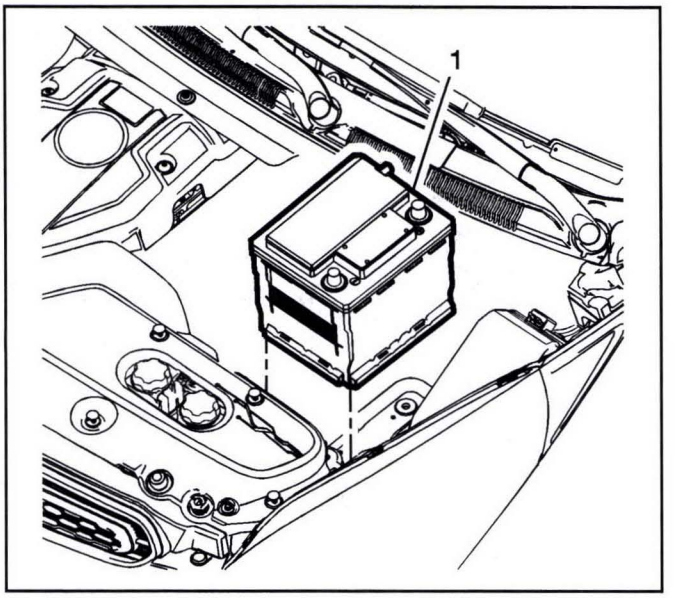

3213057

5. Remove the battery (1) from the engine compartment.

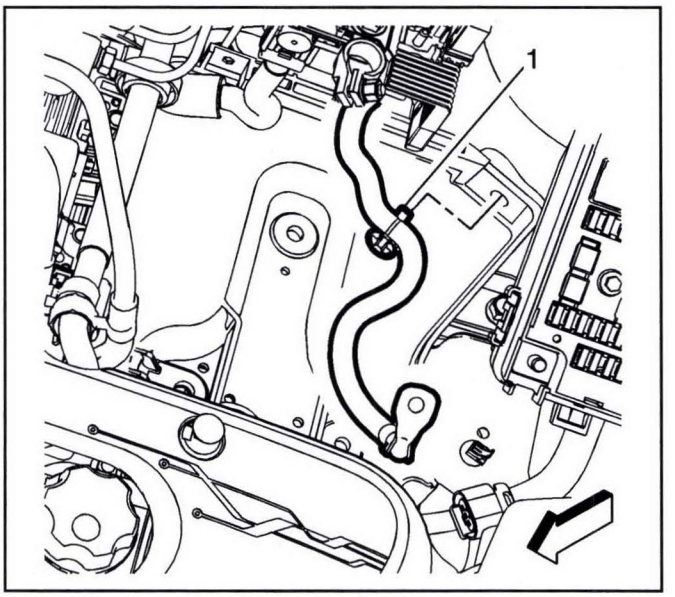

3213086

6. Detach the battery positive cable retainer (1) from the battery tray.

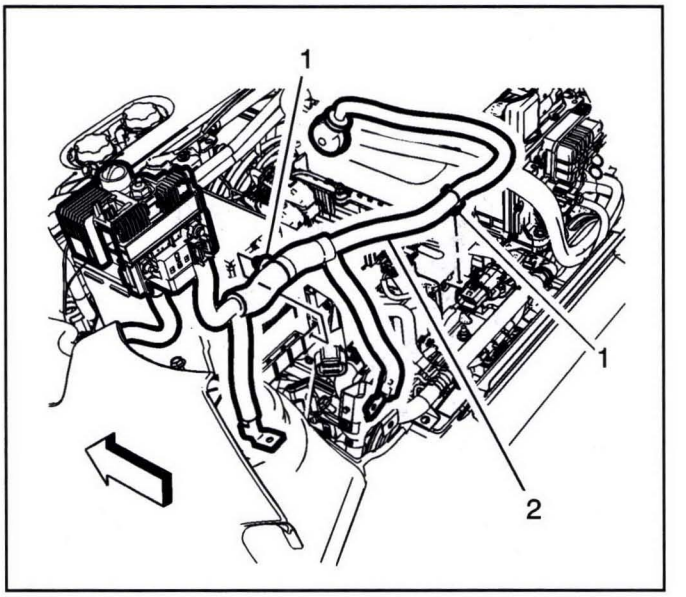

2917965

7. Detach the battery positive cable retainers (1) from the battery tray and bracket.
8. Remove the radiator surge tank clamp bracket. Refer to *Radiator Surge Tank Clamp Bracket Replacement (Right Side) on page 9-279* or *Radiator Surge Tank Clamp Bracket Replacement (Left Side) on page 9-280*.

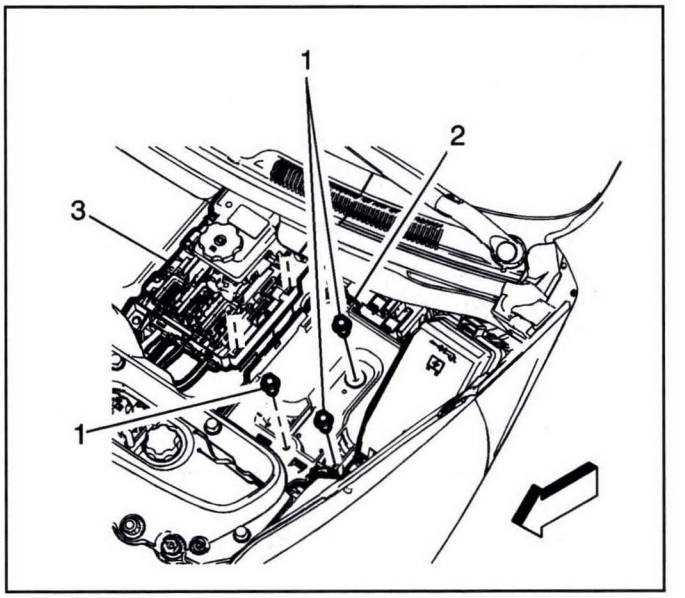

3216629

9. Detach the engine control module bracket (3) from the battery tray (2).
10. Remove the battery tray fasteners (1).
11. Remove the battery current sensor from the battery tray.

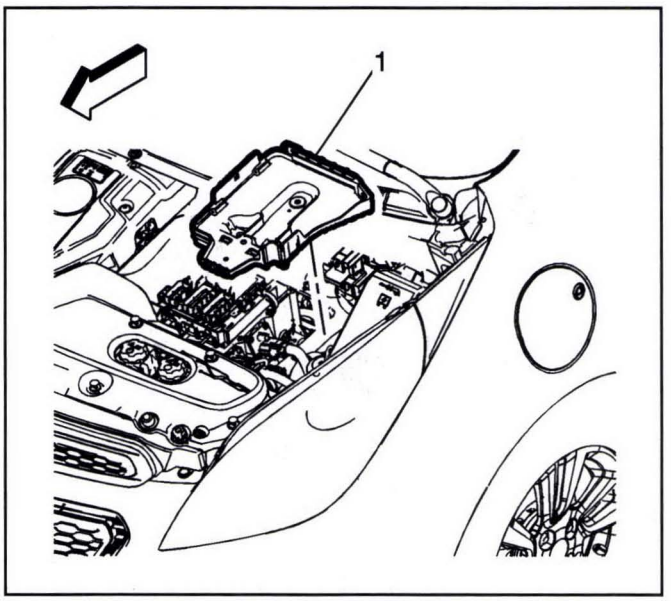

3216630

12. Remove the battery tray (1) from the vehicle.

Installation Procedure

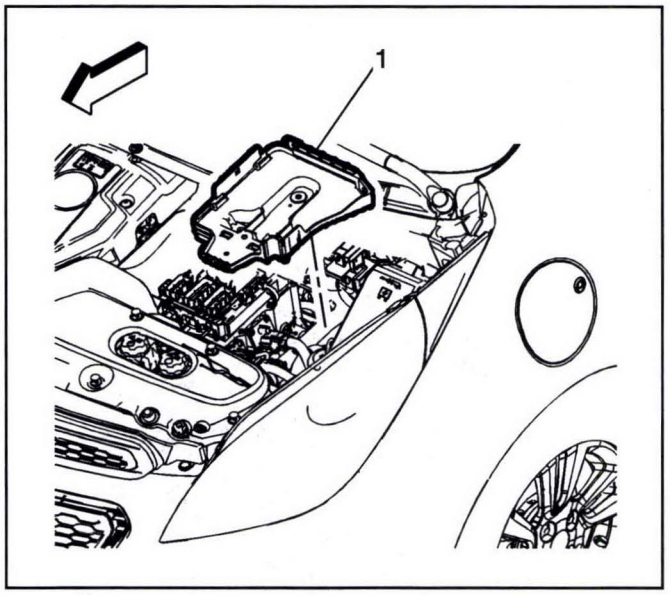

3216630

1. Install the battery tray (1) into position.

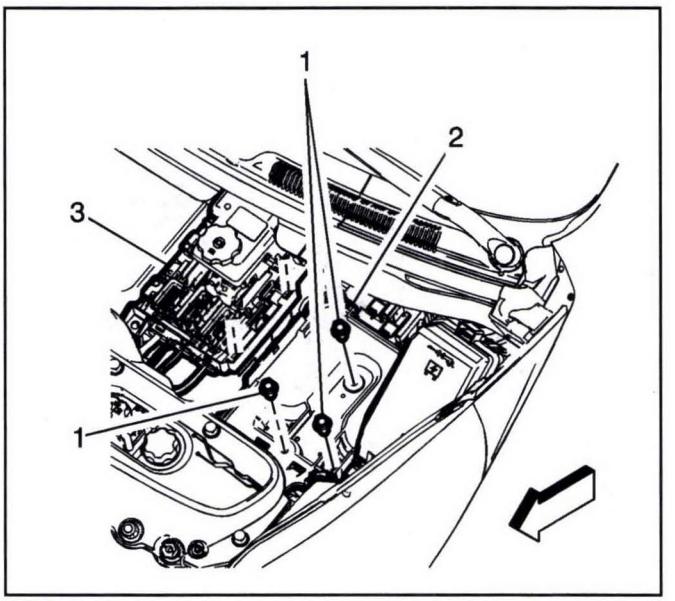

3216629

Caution: Refer to *Fastener Caution on page 0-8*.

2. Install the battery tray fasteners (1) and tighten to **22 N•m (16 lb ft)**.
3. Attach the engine control module bracket (3) to the battery tray (2).
4. Attach the battery current sensor to the battery tray.
5. Attach the radiator surge tank clamp bracket. Refer to *Radiator Surge Tank Clamp Bracket Replacement (Right Side) on page 9-279* or *Radiator Surge Tank Clamp Bracket Replacement (Left Side) on page 9-280*.

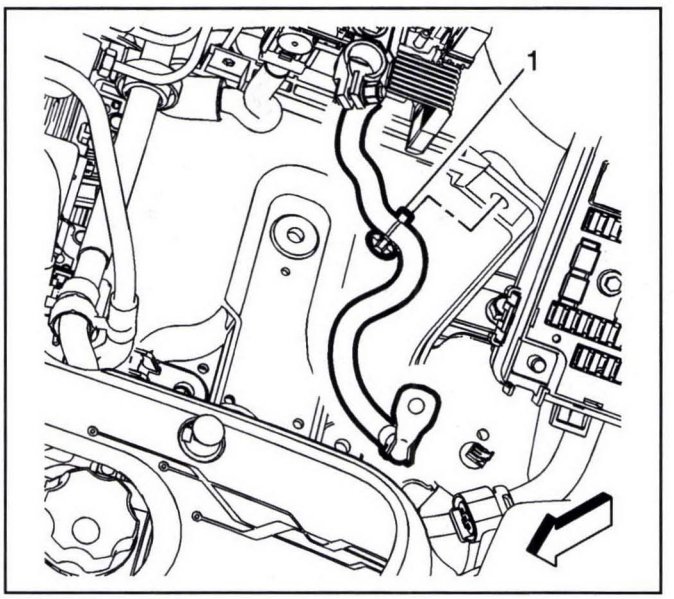

3213086

6. Attach the battery positive cable retainer (1) to the battery tray.

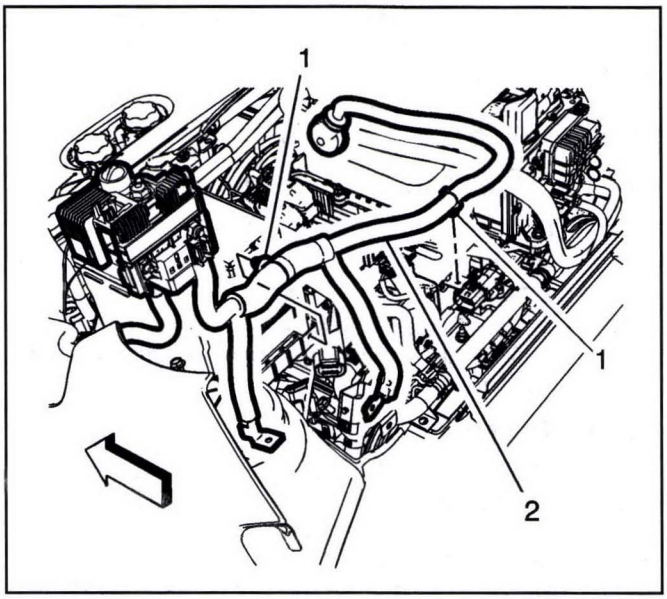

2917965

7. Attach the battery positive cable retainers (1) to the battery tray and bracket.

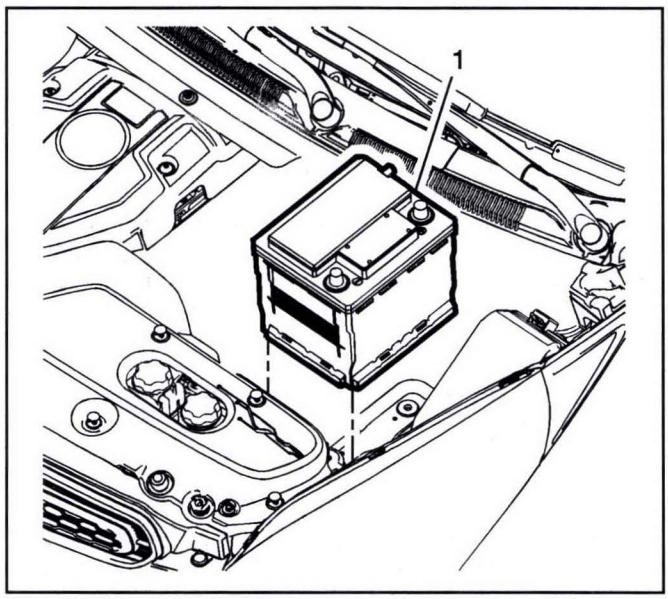

3213057

8. Install the battery (1) into position on the battery tray.

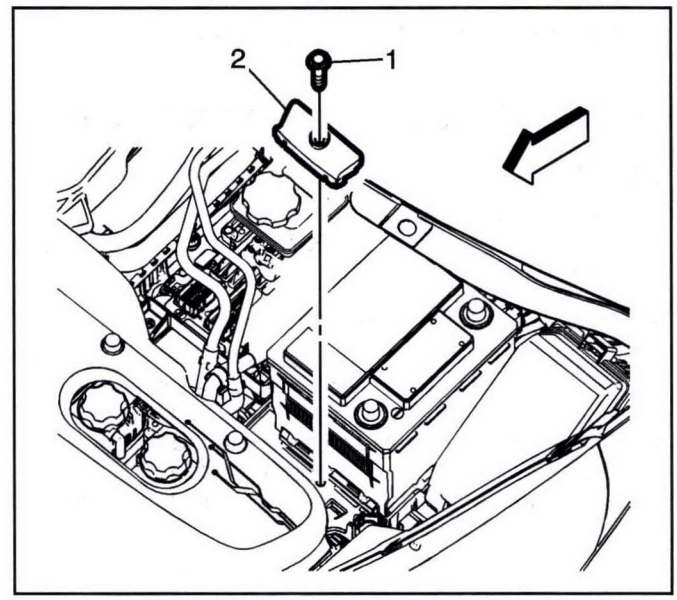

3213054

9. Install the battery hold down retainer (2) and tighten the fastener (1) to **8** N•m **(71 lb in)**.

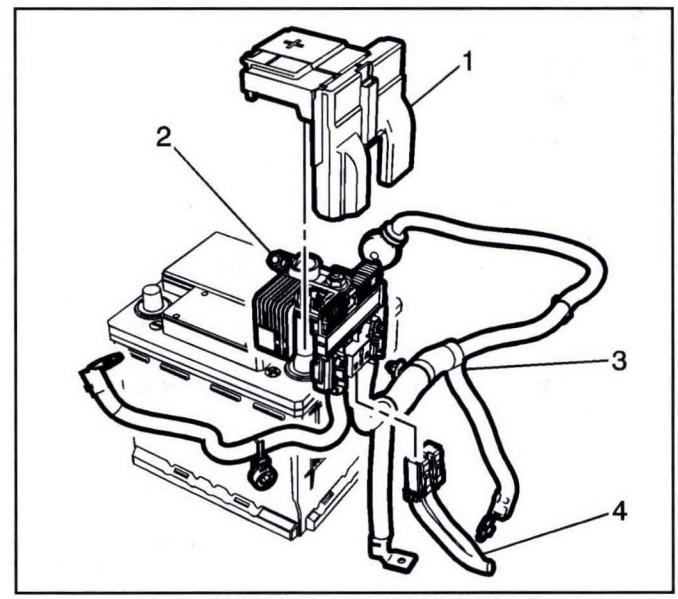

2917974

10. Install the battery positive cable to the battery post and tighten the clamp fastener (2) to **5** N•m **(44 lb in)**.
11. Install the protective cover (1) to the battery positive cable.
12. Connect the negative battery cable. Refer to *Battery Negative Cable Disconnection and Connection on page 9-20*.

Description and Operation

Battery Description and Operation

300 V Battery

For information about the 355 V hybrid drive motor battery, refer to *Drive Motor Battery System Description on page 9-545*.

Absorbent Glass Mat Battery

This vehicle is equipped with an absorbent glass mat battery. This is similar to current vehicle lead acid flood batteries, except they use glass mats that absorb electrolytes that are pressed between the plates instead of immersing the plates in electrolytes. This allows a smaller, lighter battery with the same amount of power and is less susceptible to heat.

The maximum permissible voltage allowed for the absorbent glass mat battery is 14.8 V (at room temperature).

12 V Battery

Warning: Batteries produce explosive gases, contain corrosive acid, and supply levels of electrical current high enough to cause burns. Therefore, to reduce the risk of personal injury when working near a battery:

- ***Always shield your eyes and avoid leaning over the battery whenever possible.***
- ***Do not expose the battery to open flames or sparks.***
- ***Do not allow the battery electrolyte to contact the eyes or the skin. Flush immediately and thoroughly any contacted areas with water and get medical help.***
- ***Follow each step of the jump starting procedure in order.***
- ***Treat both the booster and the discharged batteries carefully when using the jumper cables.***

Note: Because of the materials used in the manufacture of automotive lead-acid batteries, dealers and service shops that handle them are subject to various regulations issued by OSHA, EPA, DOT, and various state or local agencies. Other regulations may also apply in other locations. Always know and follow these regulations when handling batteries.

Batteries that are no longer wanted must be disposed of by an approved battery recycler and must never be thrown in the trash or sent to a landfill.

Batteries that are not part of the vehicle itself, not the battery under the hood, must only be transported on public streets for business purposes via approved hazardous material transportation procedures.

Battery storage, charging and testing facilities in repair shops must meet various requirements for ventilation, safety equipment, material segregation, etc.

The maintenance free battery is standard. There are no vent plugs in the cover. The battery is completely sealed except for 2 small vent holes in the side. These vent holes allow the small amount of gas that is produced in the battery to escape.

Battery Ratings

A battery has 2 ratings:

- Cold cranking amperage
- Amp hours

When a battery is replaced use a battery with similar ratings. Refer to the battery specification label on the original battery.

Amp Hours

The amp hour rating tells you how much amperage is available when discharged evenly over a 20 hour period. The amp hour rating is cumulative, so in order to know how many constant amps the battery will output for 20 hours, you have to divide the amp hour rating by 20. Example: If a battery has an amp hour rating of 74, dividing by 20 = 3.75. Such a battery can carry a 3.75 A load for 20 hours before dropping to 10.5 V. (10.5 V is the fully discharged level, at which point the battery needs to be recharged.) A battery with an amp hour rating of 55 will carry a 2.75 A load for 20 hours before dropping to 10.5 V.

Cold Cranking Amperage

The cold cranking amperage is an indication of the ability of the battery to crank the engine at cold temperatures. The cold cranking amperage rating is the minimum amperage the battery must maintain for 30 seconds at –18°C (0°F) while maintaining at least 7.2 V. Refer to the battery specification label on the original battery for the cold cranking amperage rating for this vehicle.

Charging System Description and Operation

12 V Battery

The following information is for the 12 V battery only.

For information about charging the high voltage drive motor batteries, refer to *Drive Motor Battery System Description on page 9-545*.

Electrical Power Management Overview

The electrical power management system is designed to monitor and control the charging system and send diagnostic messages to alert the driver of possible problems. This electrical power management system primarily utilizes existing on-board computer capability to maximize the effectiveness of the charging system, manage the load, improve battery state of charge and life, and minimize the system's impact on fuel economy. The electrical power management system performs 3 functions:

- It monitors the battery voltage and estimates the battery condition.
- It takes corrective actions by adjusting the regulated voltage.
- It performs diagnostics and driver notification.

The battery condition is estimated during Vehicle OFF and during Vehicle in Service Mode. During Vehicle OFF the state of charge of the battery is determined by measuring the open-circuit voltage. The state of charge is a function of the acid concentration and the internal resistance of the battery, and is estimated by reading the battery open circuit voltage when the battery has been at rest for several hours.

The state of charge can be used as a diagnostic tool to tell the customer or the dealer the condition of the battery. During Vehicle ON mode, the algorithm continuously estimates state of charge based on adjusted net amp hours, battery capacity, initial state of charge, and temperature.

While running, the battery degree of discharge is primarily determined by a battery current sensor, which is integrated to obtain net amp hours.

In addition, the electrical power management function is designed to perform regulated voltage control to improve battery state of charge, battery life, and fuel economy. This is accomplished by using knowledge of the battery state of charge and temperature to set the charging voltage to an optimum battery voltage level for recharging without detriment to battery life.

Charging Block Diagram

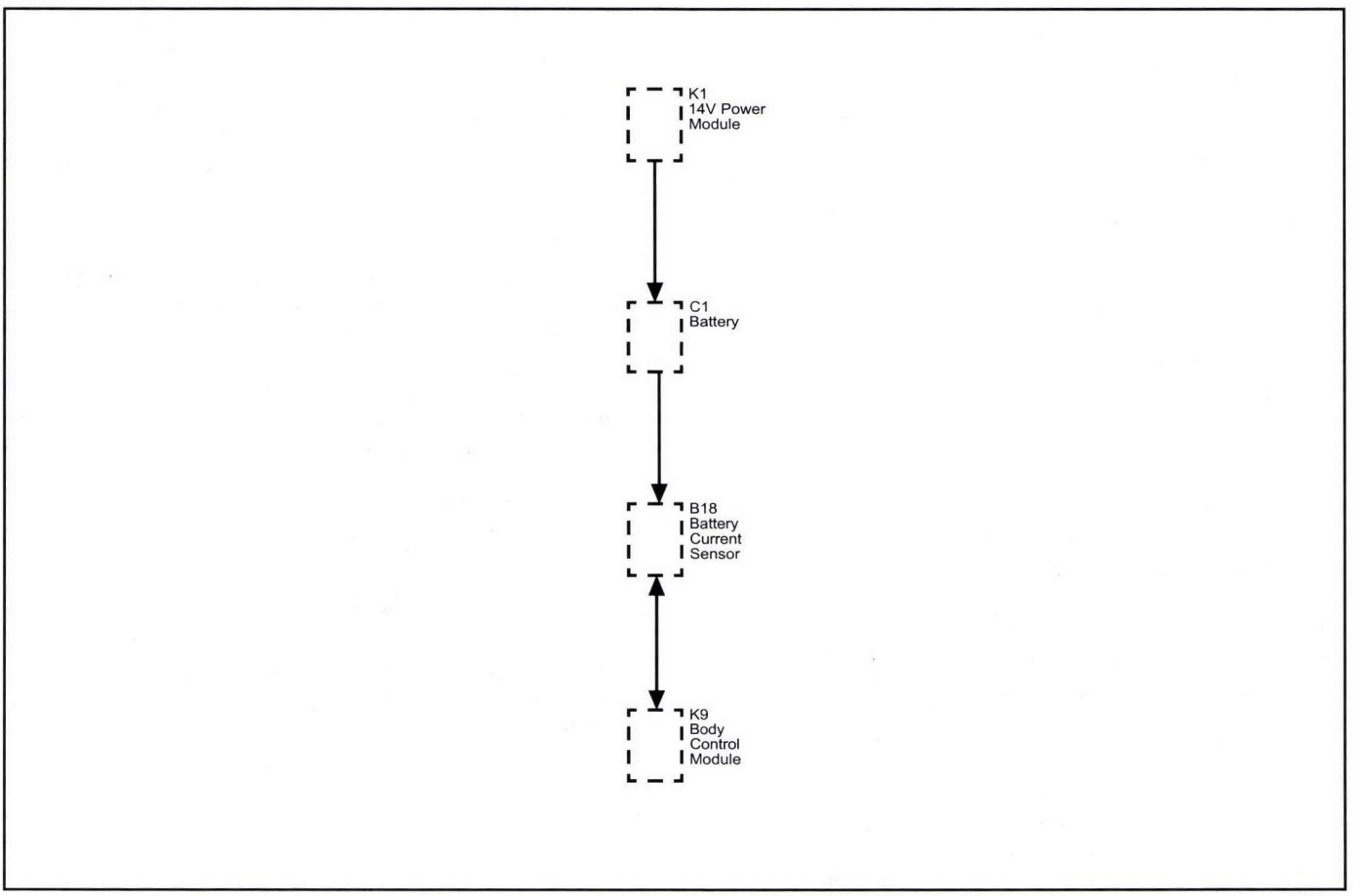

3603729

Charging System Components

Drive Motor/Generators

The drive motor/generators are serviceable components located within the transmission housing. When the rotors are spun, an alternating current (AC) is induced into the stator windings. This AC voltage is then sent to the drive motor generator power inverter module (PIM) where it is converted to high voltage direct current (DC) power. The output of the PIM is converted into low voltage electrical power by the

accessory DC power converter module (APM) for use by the vehicle's electrical system to maintain electrical loads and battery charge.

Body Control Module (BCM)

The body control module (BCM) is a GMLAN device. It communicates with the engine control module (ECM) and the instrument panel cluster for electrical power management operation. The BCM determines the desired voltage set point and sends the information to the APM. The BCM monitors a battery current sensor, the battery positive voltage circuit, and estimated battery temperature to determine battery state of charge.

Battery Current Sensor

The battery current sensor is a serviceable component that is connected to the negative battery cable at the battery. The battery current sensor is a 3-wire hall effect current sensor. The battery current sensor monitors the battery current. It directly inputs to the BCM. It creates a 5 V pulse width modulation (PWM) signal of 128 Hz with a duty cycle of 0–100 percent. Normal duty cycle is between 5–95 percent. Between 0–5 percent and 95–100 percent are for diagnostic purposes.

Engine Control Module (ECM)

The ECM receives control decisions based on messages from the BCM.

Instrument Panel Cluster

The instrument panel cluster provides a means of customer notification in case of a failure and a voltmeter. There are 2 means of notification, a charge indicator and a driver information center message of SERVICE BATTERY CHARGING SYSTEM.

Charging System Operation

The purpose of the charging system is to maintain the battery charge and vehicle loads. There are 6 modes of operation and they include:

- Battery Sulfation Mode
- Normal Mode
- Fuel Economy Mode
- Headlamp Mode
- Voltage Reduction Mode
- Plant Assembly Mode

Battery Sulfation Mode

Battery sulfation mode is used to help maintain the battery life. The charging system will enter a battery sulfation mode which tries to increase the vehicle charging when the charging system voltage is less than 13.2 V for about 30 minutes. Once in this mode, the BCM will set a targeted output voltage between 13.9–15.5 V for about 5 minutes. Following this 5 minutes, the BCM will then determine which mode to enter depending on the system voltage requirements.

Normal Mode

The BCM will enter Normal Mode whenever one of the following conditions are met.

- The wipers are ON for more than 3 seconds.
- GMLAN Climate Control Voltage Boost Mode Request is true, as sensed by the HVAC control head. High speed cooling fan, rear defogger and HVAC high speed blower operation can cause the BCM to enter the Charge Mode.
- The estimated battery temperature is less than 0° C (32°F).
- Vehicle Speed is greater than 145 km/h (90 mph)
- Current Sensor Fault Exists
- System Voltage was determined to be below 12.56 V
- Tow/Haul Mode is enabled

When any one of these conditions is met, the system will set targeted generator output voltage to a charging voltage between 13.9–15.5 V, depending on the battery state of charge and estimated battery temperature.

Fuel Economy Mode

The BCM will enter Fuel Economy Mode when the ambient air temperature is at least 0°C (32°F) but less than or equal to 80°C (176°F), the calculated battery current is greater than −8 A but less than 5 A, and the battery state of charge is greater than or equal to 85 percent. Its targeted APM set-point voltage is the open circuit voltage of the battery and can be between 12.6–13.2 V. The BCM will exit this mode and enter Normal Mode when any of the conditions described above are present.

Headlamp Mode

The BCM will enter Headlamp Mode whenever the high or low beam headlamps are ON. Voltage will be regulated between 13.9–14.5 V.

Voltage Reduction Mode

The BCM will enter Voltage Reduction Mode when the calculated battery temperature is above 0°C (32°F) and the calculated battery current is greater than −7 A but less than 1 A. Its targeted APM set-point voltage is 12.9–13.2 V. The BCM will exit this mode once the criteria are met for Normal Mode.

Plant Assembly Mode

The BCM will increase charging voltage for the first 500 miles of operation in an effort to ensure that the 12 V battery is fully charged when the vehicle is delivered to the customer.

Instrument Panel Cluster Operation

Charge Indicator Operation

The instrument panel cluster illuminates the charge indicator and displays a charging system warning message in the driver information center when the one or more of the following occurs:

- The engine control module (ECM) detects system voltage less than 11 V or greater than 16 V. The instrument panel cluster receives a GMLAN message from the ECM requesting illumination.
- The BCM determines that the system voltage is less than 11 V or greater than 16 V.
- The instrument panel cluster receives a GMLAN message from the BCM indicating there is a system voltage range concern.
- The instrument panel cluster performs the displays test at the start of each Vehicle ON cycle. The indicator illuminates for approximately 3 seconds.
- Vehicle ON, with the engine OFF.

Battery Voltage Gauge Operation

The instrument panel cluster displays the system voltage as received from the BCM over the GMLAN serial data circuit. If there is no communication with the BCM then the gauge will indicate minimum.

This vehicle is equipped with a regulated voltage control system. This will cause the voltmeter to fluctuate between 12–14 V, as opposed to non-regulated systems which usually maintain a more consistent reading of 14 V. This fluctuation with the regulated voltage control system is normal system operation and NO repairs should be attempted.

SERVICE BATTERY CHARGING SYSTEM

The BCM and the ECM will send a GMLAN message to the driver information center for the SERVICE BATTERY CHARGING SYSTEM message to be displayed. It is displayed whenever the charge indicator is commanded ON due to a failure.

Special Tools and Equipment

Illustration	Tool Number/Description
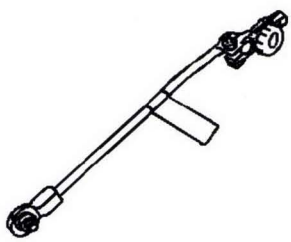 3432	EL 38758 EL 50074 J 38758 Parasitic Draw Test Switch

Illustration	Tool Number/Description
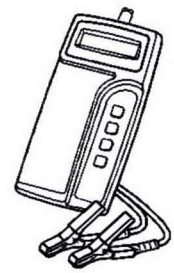 2239959	J 42000 Battery Tester
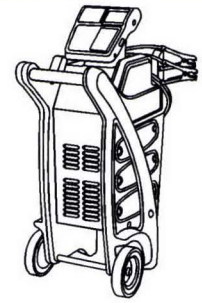 404758	EL 50313 EL 42000 EL 50076 Battery Tester
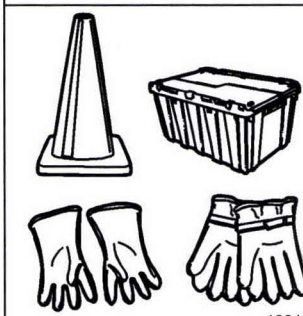 1984818	EL-48900 HEV Safety Kit
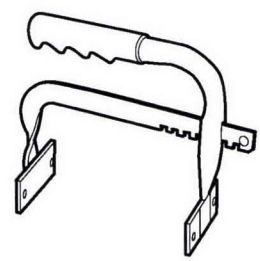 2543459	GE-49379 Battery Remover / Installer

Cruise Control

Schematic and Routing Diagrams

Cruise Control Schematics (Cruise Control (K34))

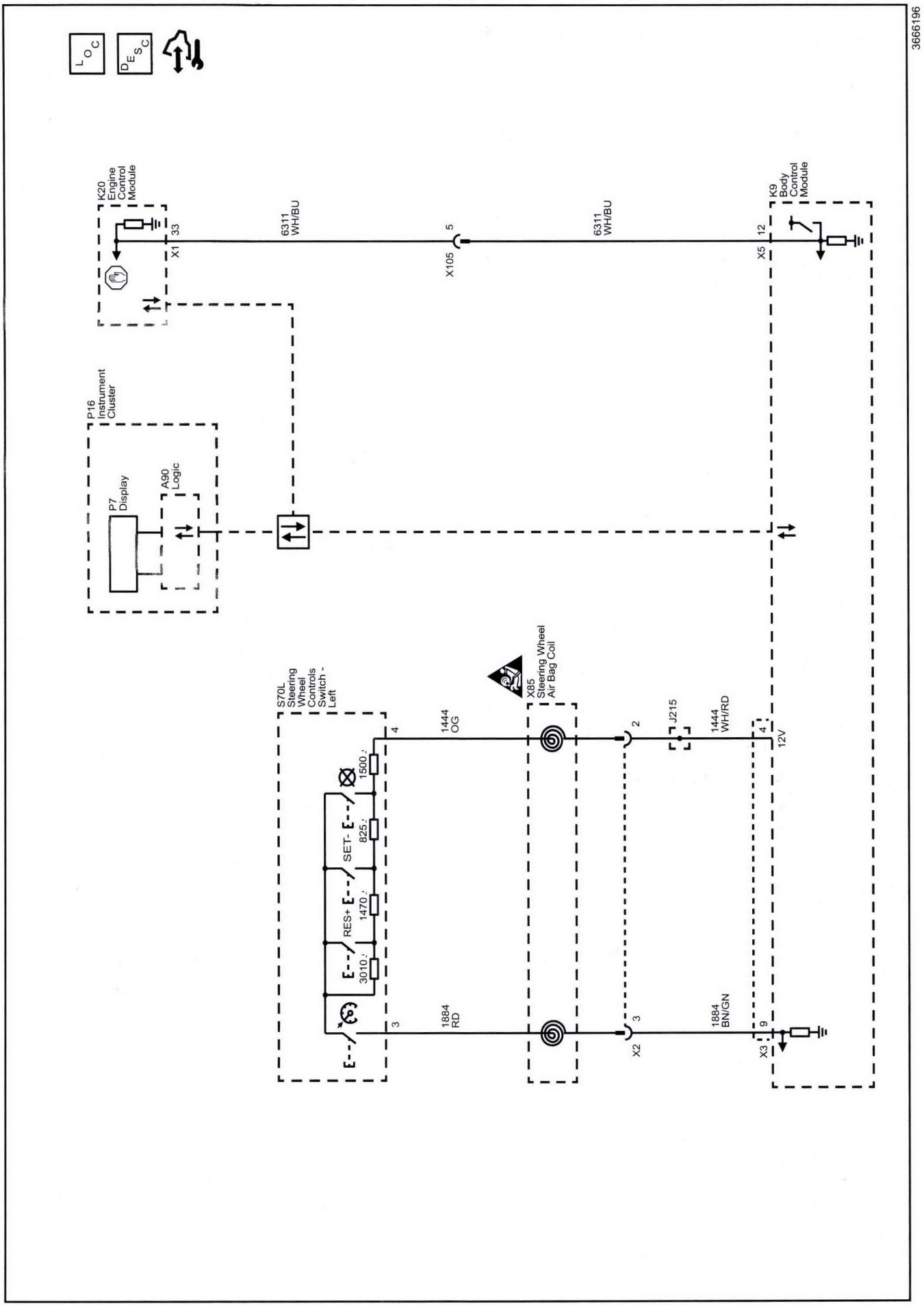

Diagnostic Information and Procedures

DTC P0572 or P0573

Diagnostic Instructions

- Perform the *Diagnostic System Check - Vehicle on page 6-91* prior to using this diagnostic procedure.
- Review *Strategy Based Diagnosis on page 6-83* for an overview of the diagnostic approach.
- *Diagnostic Procedure Instructions on page 6-84* provides an overview of each diagnostic category.

DTC Descriptors

DTC P0572: Brake Switch Circuit 1 Low Voltage
DTC P0573: Brake Switch Circuit 1 High Voltage

Diagnostic Fault Information

Circuit	Short to Ground	Open/High Resistance	Short to Voltage	Signal Performance
Stop Lamp Switch Signal	C0297 02, P0572	P0572	P0573	P0572, P0573

Circuit/System Description

The stop lamp switch signal circuit is a B+ input from the body control module (BCM) to the engine control module (ECM). The ECM monitors the stop lamp switch circuit to detect when the brake pedal has been applied. The BCM monitors the brake pedal position sensor to determine when the brake pedal is applied. When the brake pedal is applied, the BCM supplies B+ on the stop lamp switch signal circuit and also sends a serial data message to the ECM indicating that the brake pedal has been applied.

Conditions for Running the DTC

- Vehicle ON.
- Battery voltage is greater than 11.5 V.
- Brakes applied.

Conditions for Setting the DTC

P0572

This DTC will set when the ECM detects a short to ground or an open on the discrete brake signal circuit when the serial data message from the BCM indicates the brakes are applied. This diagnostic will run when the serial data message and the voltage signal on the brake switch signal circuit do not match for 8 out 10 times, and the condition is present for greater than 2 seconds.

P0573

This DTC will set when the ECM detects a short to voltage on the discrete brake signal circuit when the serial data message from the BCM indicates the brakes are NOT applied. This diagnostic will run when the serial data message and the voltage signal on the brake switch signal circuit do not match for 8 out of 10 times, and the condition is present for greater than 2 seconds.

Actions Taken When the DTC Sets

- The malfunction indicator lamp (MIL) will not illuminate.
- The cruise control system is disabled.

Conditions for Clearing the DTC

- The condition responsible for setting the DTC no longer exists.
- A history DTC will clear after 40 malfunction-free ignition cycles have occurred.

Reference Information

Schematic Reference

Cruise Control Schematics on page 9-39

Connector End View Reference

Component Connector End Views on page 11-455

Description and Operation

Cruise Control Description and Operation on page 9-48

Electrical Information Reference

- *Circuit Testing on page 11-871*
- *Connector Repairs on page 11-895*
- *Testing for Intermittent Conditions and Poor Connections on page 11-877*
- *Wiring Repairs on page 11-883*

Scan Tool Reference

Control Module References on page 6-3 for scan tool information

Circuit/System Testing

1. Vehicle OFF, disconnect the X1 harness connector at the K20 Engine Control Module, Vehicle ON.
2. Connect a test lamp between the signal circuit terminal 33 and ground.
3. Verify the test lamp turns ON and OFF when pressing and releasing the brake pedal.

⇒ **If the test lamp is always OFF**

3.1. Vehicle OFF, disconnect the harness connector at the K9 Body Control Module.

3.2. Test for infinite resistance between the signal circuit and ground.

⇒ If not infinite resistance, repair the short to ground on the circuit.

⇓ If infinite resistance.

3.3. Test for less than 2 Ω in the signal circuit end to end.

⇒ If 2 Ω or greater, repair the open/high resistance in the circuit.

⇒ If less than 2 Ω, replace the K9 Body Control Module.

⇒ **If the test lamp is always ON**

3.1. Vehicle OFF, disconnect the harness connector at the K9 Body Control Module, Vehicle ON.

3.2. Test for less than 1 V between the signal circuit and ground.

⇒ If 1 V or greater, repair the short to voltage on the circuit.

⇒ If less than 1 V replace the K9 Body Control Module.

⇓ **If the test lamp turns ON and OFF**

4. Replace the K20 Engine Control Module.

Repair Instructions

Perform the *Diagnostic Repair Verification on page 6-123* after completing the repair.

Control Module References on page 6-3 for BCM or ECM programming, replacement, and setup.

DTC P0575

Diagnostic Instructions

- Perform the *Diagnostic System Check - Vehicle on page 6-91* prior to using this diagnostic procedure.
- Review *Strategy Based Diagnosis on page 6-83* for an overview of the diagnostic approach.
- *Diagnostic Procedure Instructions on page 6-84* provides an overview of each diagnostic category.

DTC Descriptor

DTC P0575: Cruise Control Switch Signal Message Counter Incorrect

Circuit/System Description

When a cruise control function switch is activated, the body control module (BCM) detects a predetermined voltage. The BCM sends a serial data message to the engine control module (ECM) indicating the function that has been requested.

Conditions for Running the DTC

- Vehicle ON.
- The vehicle speed is greater than 40 km/h (25 MPH) and the cruise control is engaged.

Conditions for Setting the DTC

- The ECM receives an invalid cruise control switch status serial data message from the BCM.
- This diagnostic runs continuously.

Actions Taken When the DTC Sets

DTC P0575 is a type C DTC.

Conditions for Clearing the DTC

DTC P0575 is a type C DTC.

Reference Information

Schematic Reference

Cruise Control Schematics on page 9-39

Connector End View Reference

Component Connector End Views on page 11-455

Description and Operation

Cruise Control Description and Operation on page 9-48

Electrical Information Reference

- *Circuit Testing on page 11-871*
- *Connector Repairs on page 11-895*
- *Testing for Intermittent Conditions and Poor Connections on page 11-877*
- *Wiring Repairs on page 11-883*

DTC Type Reference

Powertrain Diagnostic Trouble Code (DTC) Type Definitions on page 6-92

Scan Tool Reference

Control Module References on page 6-3 for scan tool information

Circuit/System Verification

1. Vehicle ON.
2. Verify that no DTCs are set, except DTC P0575.

⇒ **If any other DTC is set, except DTC P0575**

Refer to *Diagnostic Trouble Code (DTC) List - Vehicle on page 6-92*.

⇓ **If only DTC P0575 is set**

3. Replace the K9 Body Control Module.
4. Verify DTC P0575 does not set when operating the vehicle within the Conditions for Running the DTC.

⇒ **If the DTC sets**

Replace the K20 Engine Control Module.

⇓ **If the DTC does not set**

5. All OK.

Repair Instructions

Perform the *Diagnostic Repair Verification on page 6-123* after completing the repair.

Control Module References on page 6-3 for BCM or ECM programming, replacement, and setup

DTC P0703

Diagnostic Instructions

- Perform the *Diagnostic System Check - Vehicle on page 6-91* prior to using this diagnostic procedure.
- Review *Strategy Based Diagnosis on page 6-83* for an overview of the diagnostic approach.
- *Diagnostic Procedure Instructions on page 6-84* provides an overview of each diagnostic category.

DTC Descriptor

DTC P0703: Brake Switch Signal Message Counter Incorrect

Circuit/System Description

The body control module (BCM) monitors the brake pedal position sensor. When the brake pedal is applied, the BCM detects a predetermined voltage signal. The BCM sends a serial data message to the engine control module (ECM) indicating the status of the stop lamps.

Conditions for Running the DTC

Vehicle ON.

Conditions for Setting the DTC

- The ECM receives an invalid brake pedal status serial data message from the BCM.
- This diagnostic runs continuously.

Actions Taken When the DTC Sets

- The malfunction indicator lamp (MIL) will not illuminate.
- The cruise control system is disabled.

Conditions for Clearing the DTC

- The condition responsible for setting the DTC no longer exists.
- A history DTC will clear after 40 malfunction-free ignition cycles have occurred.

Reference Information

Schematic Reference

Cruise Control Schematics on page 9-39

Connector End View Reference

Component Connector End Views on page 11-455

Description and Operation

Cruise Control Description and Operation on page 9-48

Electrical Information Reference

- *Circuit Testing on page 11-871*
- *Connector Repairs on page 11-895*
- *Testing for Intermittent Conditions and Poor Connections on page 11-877*
- *Wiring Repairs on page 11-883*

Scan Tool Reference

Control Module References on page 6-3 for scan tool information

Circuit/System Verification

1. Vehicle ON.
2. Verify that no DTCs are set, except DTC P0703.

⇒ **If any other DTC is set, except DTC P0703**

Refer to *Diagnostic Trouble Code (DTC) List - Vehicle on page 6-92*.

⇓ **If only DTC P0703 is set**

3. Replace the K9 Body Control Module.
4. Verify DTC P0703 does not set when operating the vehicle within the conditions for running the DTC.

⇒ **If the DTC sets**

Replace the K20 Engine Control Module.

⇓ **If the DTC does not set**

5. All OK.

Repair Instructions

Perform the *Diagnostic Repair Verification on page 6-123* after completing the repair.

Control Module References on page 6-3 for BCM or ECM programming, replacement, and setup

Symptoms - Cruise Control

Note: The following steps must be completed before using the symptom tables.

1. Before using the symptom diagnostic table, perform the *Diagnostic System Check - Vehicle on page 6-91* in order to verify the following conditions:
   - There are no DTCs set.
   - The module can communicate via the serial data.
2. Review the system operation in order to understand the system functions. Refer to *Cruise Control Description and Operation on page 9-48*.

Visual/Physical Inspection

- Inspect for aftermarket devices which can affect the operation of the Cruise Control System. Refer to *Checking Aftermarket Accessories on page 11-871*.
- Inspect the accessible system components or the visible system components for obvious damage or for obvious conditions which can cause the symptom.

Intermittent

Faulty electrical connections or wiring may be the cause of intermittent conditions. Refer to *Testing for Intermittent Conditions and Poor Connections on page 11-877*.

Symptom List

Refer to a symptom diagnostic procedure from the following list in order to diagnose the symptom:

- *Cruise Control Malfunction - DTC B3794, P0564, P0565, P0567, P0568, P056C, P0580, P0581, P155A-P155C, or P162C on page 9-45*
- *Cruise Control Indicator Malfunction on page 9-44*

Cruise Control Indicator Malfunction

Diagnostic Instructions

- Perform the *Diagnostic System Check - Vehicle on page 6-91* prior to using this diagnostic procedure.
- Review *Strategy Based Diagnosis on page 6-83* for an overview of the diagnostic approach.
- *Diagnostic Procedure Instructions on page 6-84* provides an overview of each diagnostic category.

Circuit/System Description

The instrument cluster illuminates the cruise control engaged indicator based on serial data messages received from the engine control module (ECM). The indicator is commanded ON when the cruise control system is controlling vehicle speed, and turned OFF with the system disengaged.

Reference Information

Schematic Reference

Cruise Control Schematics on page 9-39

Connector End View Reference

Component Connector End Views on page 11-455

Description and Operation

Cruise Control Description and Operation on page 9-48

Electrical Information Reference

- *Circuit Testing on page 11-871*
- *Connector Repairs on page 11-895*
- *Testing for Intermittent Conditions and Poor Connections on page 11-877*
- *Wiring Repairs on page 11-883*

Scan Tool Reference

Control Module References on page 6-3 for scan tool information

Circuit/System Verification

1. Vehicle ON.
2. Verify the cruise control indicator turns ON and OFF when commanding the All Indicators ON and OFF with a scan tool.

⇒ **If the indicator does not turn ON and OFF**

Replace the P16 Instrument Cluster.

⇓ **If the indicator turns ON and OFF**

3. All OK.

Repair Instructions

Perform the *Diagnostic Repair Verification on page 6-123* after completing the repair.

Control Module References on page 6-3 for instrument cluster replacement, programming and setup

Cruise Control Malfunction - DTC B3794, P0564, P0565, P0567, P0568, P056C, P0580, P0581, P155A-P155C, or P162C

Diagnostic Instructions

- Perform the *Diagnostic System Check - Vehicle on page 6-91* prior to using this diagnostic procedure.
- Review *Strategy Based Diagnosis on page 6-83* for an overview of the diagnostic approach.
- *Diagnostic Procedure Instructions on page 6-84* provides an overview of each diagnostic category.

DTC Descriptors

DTC B3794 08: Cruise Control Function Request Circuit
DTC B3794 61: Cruise Control Function Request Circuit
DTC P0564: Cruise Control Multifunction Switch Circuit
DTC P0565: Cruise Control Switch Circuit
DTC P0567: Cruise Control Resume Switch Circuit
DTC P0568: Cruise Control Set Switch Circuit
DTC P056C: Cruise Control Cancel Switch Circuit
DTC P0580: Cruise Control Multifunction Switch Circuit Low Voltage
DTC P0581: Cruise Control Multifunction Switch Circuit High Voltage
DTC P155A: Cruise Control Switch State Undetermined
DTC P155B: Cruise Control Set/Coast Switch 2 Circuit
DTC P155C: Cruise Control Resume/Acceleration Switch 2 Circuit
DTC P162C: Vehicle Speed Limiting/Warning Switch Circuit

Diagnostic Fault Information

Circuit	Short to Ground	Open/High Resistance	Short to Voltage	Signal Performance
Ignition	1	1	—	—
Signal	1	P0564	B3794 08, P0567, P0568	B3794 61, P0564
1. Cruise Control Malfunction				

Circuit/System Description

The cruise control switch is an input to the body control module (BCM). The BCM monitors the cruise control on/off, set/coast, resume/accelerate and cancel switches via the cruise control switch signal circuit in order to detect when the driver has requested to perform a cruise control function. The BCM detects a specific voltage signal on the cruise control switch signal circuit when a switch is applied. The engine control module (ECM) receives the requested cruise control switch function from the BCM via a serial data message.

Conditions for Running the DTC

- The cruise switch is ON.
- The ignition is ON.

Conditions for Setting the DTC

B3794 08

The BCM detects an invalid voltage signal on the cruise control switch signal circuit for 1 s.

B3794 61

Stuck switch for either Resume/Accel or Set/Coast button for 60 s.

P0564, P0565, P0567, P0568, P056C

- The BCM detects an invalid voltage signal on the cruise control switch signal circuit for greater than 2 s and sends a serial data message to the ECM. The ECM sets these DTCs when the message is received.
- The ECM runs this diagnostic continuously.

P0580, P0581

- The ECM detects an invalid voltage signal on the cruise control switch signal circuit.
- The above condition is present for greater than 2 s.
- The ECM runs this diagnostic continuously.

P155A

The ECM is unable to determine the state of the cruise control switch.

P162C

The ECM is unable to determine the state of the vehicle speed limiting switch.

Actions Taken When the DTC Sets

B3794

- The malfunction indicator lamp (MIL) will not illuminate.
- The cruise control system is disabled.

P0564, P0565, P0567, P0568, P056C, P0580, P0581, P155A, P162C

DTCs P0564, P0565, P0567, P0568, P056C, P0580, P0581, P155A and P162C are type C DTCs

Conditions for Clearing the DTC

B3794

- The condition responsible for setting the DTC no longer exists.
- A history DTC will clear after 40 malfunction-free ignition cycles have occurred.

P0564, P0565, P0567, P0568, P056C, P0580, P0581, P155A, P162C

DTCs P0564, P0565, P0567, P0568, P056C, P0580, P0581, P155A and P162C are type C DTCs.

Reference Information

Schematic Reference

Cruise Control Schematics on page 9-39

Connector End View Reference

Component Connector End Views on page 11-455

Description and Operation

Cruise Control Description and Operation on page 9-48

Electrical Information Reference

- *Circuit Testing on page 11-871*
- *Connector Repairs on page 11-895*
- *Testing for Intermittent Conditions and Poor Connections on page 11-877*
- *Wiring Repairs on page 11-883*

Scan Tool Reference

Control Module References on page 6-3 for scan tool information

Circuit/System Verification

1. Vehicle ON.
2. Verify the scan tool BCM Cruise Control Switch Status parameter changes between Off and On, Resume and Set when switching between each position on the cruise control switch.

⇒ **If the parameter does not change**

Refer to Circuit/System Testing.

⇓ **If the parameter changes**

3. All OK.

Circuit/System Testing

Note:

- An open ignition circuit or fuse before the control module will cause communication DTCs or power mode mismatch DTCs to set against or in the control module. This failure mode will be diagnosed in the no communications diagnostic procedure or power mode mismatch.
- This test assumes the ignition circuit has a module driver that will open under a high current condition before the fuse opens.
- The module driver can open under normal conditions such as battery run down protection or a retained accessory power mode.

1. Vehicle OFF, disconnect the harness connector at the S70L Steering Wheel Controls Switch-Left, ignition ON.
2. Verify a test lamp illuminates between the ignition circuit terminal 10 and ground.

⇒ **If the test lamp does not illuminate**

2.1. Vehicle OFF, disconnect the harness connector at the K9 Body Control Module.

2.2. Test for greater than 100 Ω between the ignition circuit and ground.

⇒ If 100 Ω or less, repair the short to ground on the circuit.

⇓ If greater than 100 Ω

2.3. Test for less than 2 Ω in the ignition circuit end to end.

⇒ If 2 Ω or greater, repair the open/high resistance in the circuit.

⇒ If less than 2 Ω, test or replace the K9 Body Control Module.

⇓ **If the test lamp illuminates**

3. Verify the scan tool BCM Cruise Control Switch Status parameter is Open/High Resistance.

⇒ **If not Open/High Resistance**

3.1. Vehicle OFF, disconnect the harness connector at the K9 Body Control Module, ignition ON.

3.2. Test for less than 1 V between the signal circuit terminal 3 and ground.

⇒ If 1 V or greater, repair the short to voltage on the circuit.

⇒ If less than 1 V, replace the K9 Body Control Module.

⇓ **If Open/High Resistance**

4. Install a 3 A fused jumper wire between the signal circuit terminal 3 and the ignition circuit terminal 4.

5. Verify the scan tool BCM Cruise Control Switch Status parameter is Short to Battery.

⇒ **If not Short to Battery**

5.1. Vehicle OFF, disconnect the harness connector at the K9 Body Control Module.

5.2. Test for infinite resistance between the signal circuit terminal 3 and ground.

⇒ If less than infinite resistance, repair the short to ground on the circuit.

⇓ If infinite resistance

5.3. Test for less than 2 Ω in the signal circuit end to end.

⇒ If 2 Ω or greater, repair the open/high resistance in the circuit.

⇒ If less than 2 Ω, replace the K9 Body Control Module.

⇓ **If Short to Battery**

6. Test or replace the S70L Steering Wheel Controls Switch-Left.

Repair Instructions

Perform the *Diagnostic Repair Verification on page 6-123* after completing the repair.

Control Module References on page 6-3 for BCM replacement, programming and setup.

Repair Instructions

Cruise Control Switch Replacement

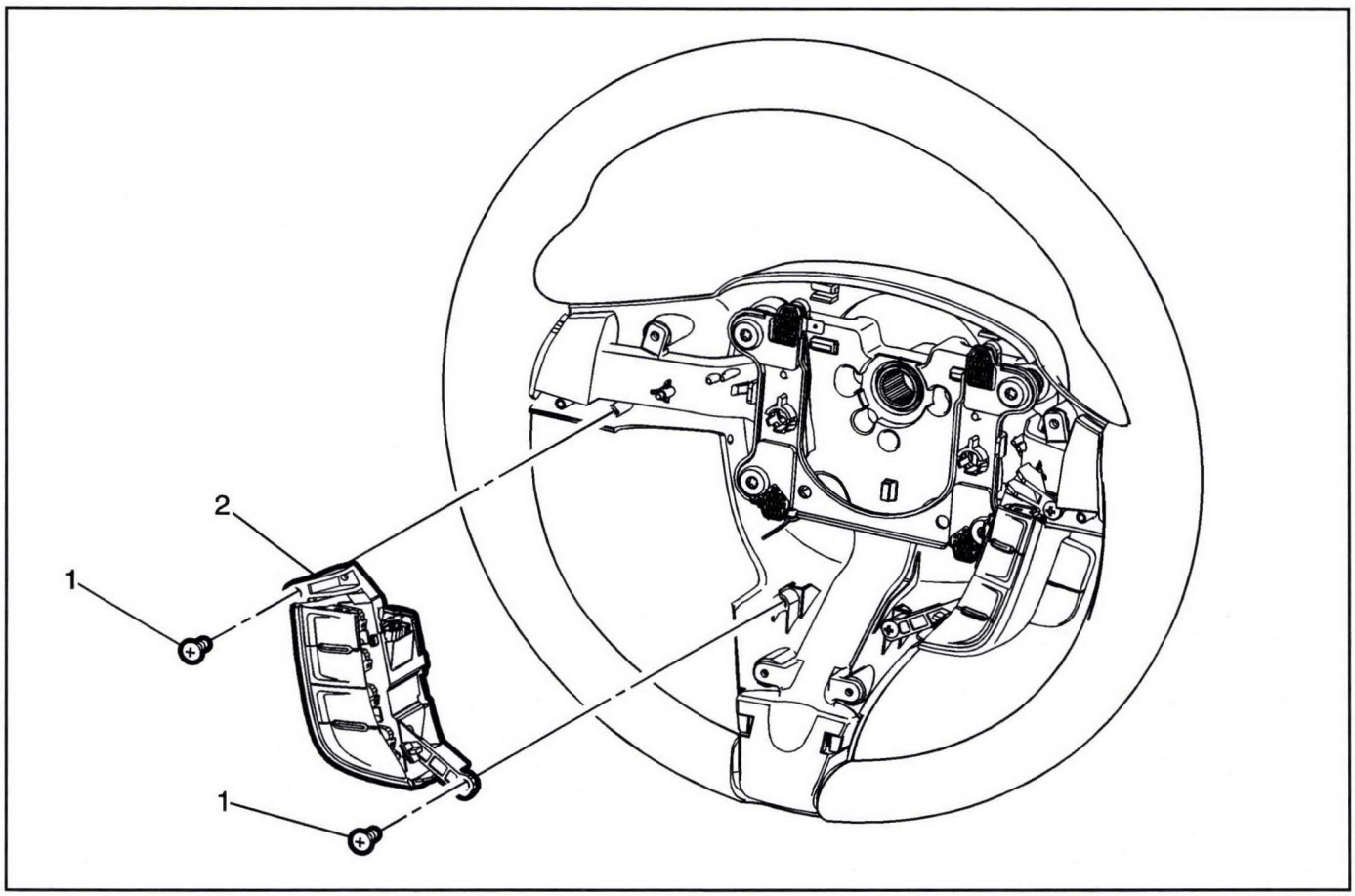

3212603

Cruise Control Switch Replacement

Callout	Component Name
Preliminary Procedure Remove the steering wheel spoke lower cover. Refer to *Steering Wheel Spoke Lower Cover Replacement on page 14-33*.	
1	Cruise Control Switch Fasteners (Qty: 2) **Caution:** Refer to *Fastener Caution on page 0-8*.

Cruise Control Switch Replacement (cont'd)

Callout	Component Name
2	Cruise Control Switch

Description and Operation

Cruise Control Description and Operation

Cruise Control System Block Diagram

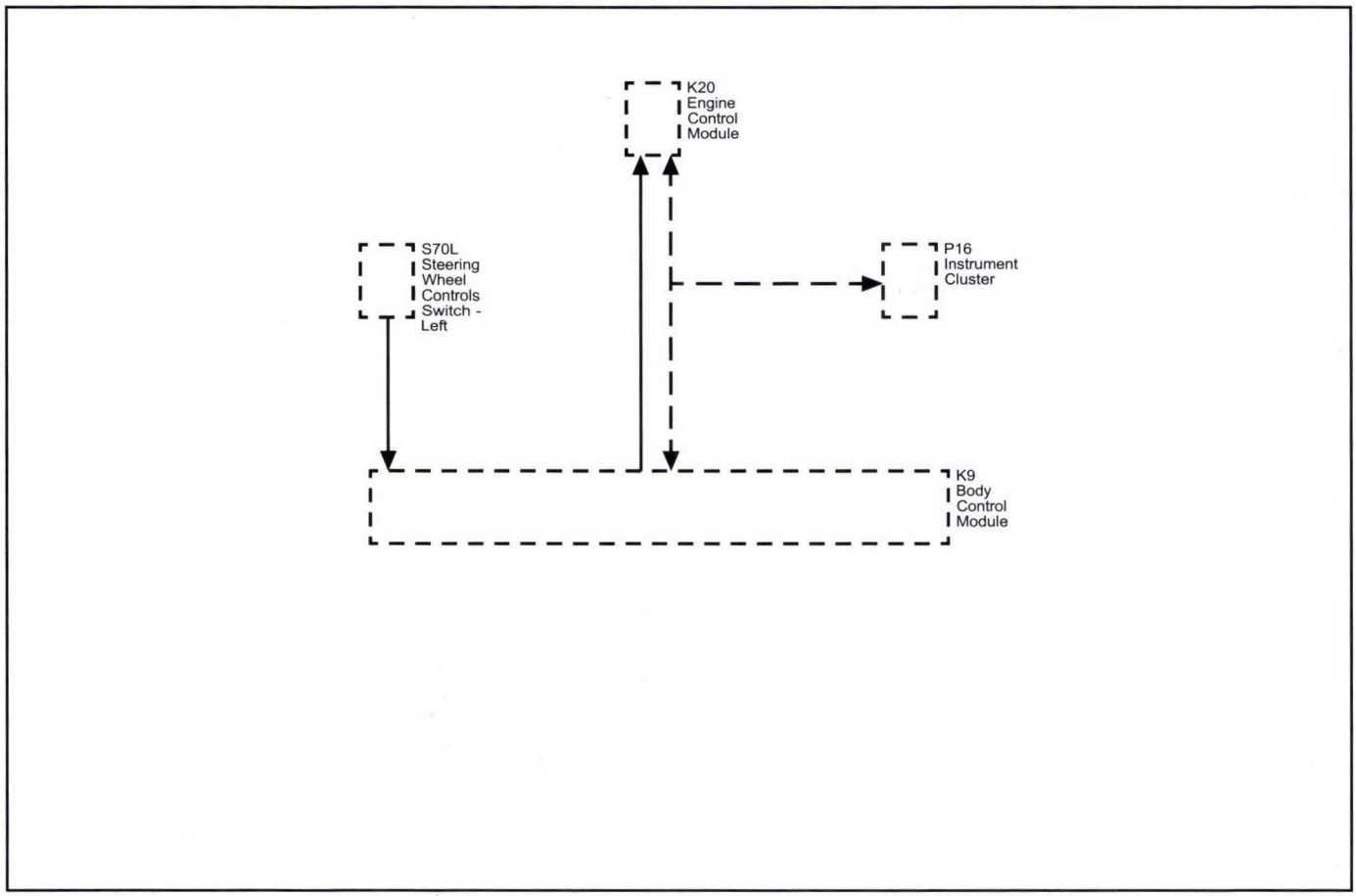

3637621

Cruise control is a speed control system that maintains a desired vehicle speed under normal driving conditions at speeds above 40 km/h (25 mph). Steep grades may cause variations in the selected vehicle speeds.

The following are the main components of the Cruise Control System:

- The accelerator pedal
- The brake pedal position (BPP) sensor
- The body control module (BCM)
- The cruise on/off switch
- The cruise control cancel switch
- The + RES switch (equivalent to resume/accel switch)
- The − SET switch (equivalent to set/coast switch)
- The engine control module (ECM)
- The throttle actuator control (TAC) motor (gasoline engines only)
- The vehicle speed sensor

The body control module (BCM) monitors the signal circuit of the cruise control switches, which are located on the steering wheel. The BCM relays the cruise control switch status to the engine control module (ECM) via the serial data circuit. The ECM uses the status of the cruise control switch to determine when to capture and maintain the vehicle speed. The ECM monitors the vehicle speed signal circuit in order to determine the desired vehicle speed.

Voltage is supplied to the cruise control switch via the steering wheel control switch reference voltage circuit supplied by the BCM. The cruise control function switches are arranged in a resistive ladder design, with each cruise control function switch having a different resistance value. The BCM detects a specific voltage value that is associated with the cruise control function

switch being activated. The BCM sends a serial data message to the ECM indicating that the on/off switch is active. Similarly, when the normally open + RES switch or the normally open − SET switch are pressed, the switch closes and the BCM detects the predetermined voltage signal on the cruise control resume/accel and set/coast switch signal circuit. The BCM sends a serial data message to the ECM indicating that the + RES switch or the − SET switch is active.

Cruise Control Engaged

The Cruise Control System will engage and adjust vehicle speeds, based on the activation of the following cruise control switches, which are located on the steering wheel:

- On/Off
- + RES
- − SET

To engage the Cruise Control System, ensure that the vehicle speed is above 40.2 km/h (25 mph), turn the cruise On/Off switch ON and momentarily press the − SET switch. The ECM will engage the Cruise Control System and record the vehicle speed. The ECM sends a serial data message to the instrument panel cluster (IPC) in order to illuminate the Cruise Engaged indicator in the IPC. Refer to the vehicle owner's manual for the location and operation of the cruise control On/Off indicators and driver information center (DIC) messages.

Pressing the accelerator pedal while the Cruise Control System is engaged, allows the driver to override the Cruise Control System in order to accelerate the vehicle beyond the current set vehicle speed. When the accelerator pedal is released, the vehicle will decelerate and resume the current set vehicle speed.

The driver can also override the current set vehicle speed via the − SET switch and the + RES switch. When the Cruise Control System is engaged, pressing and holding the − SET switch will allow the vehicle to decelerate from the current set vehicle speed without deactivating the Cruise Control System. When the − SET switch is released, the ECM will record the vehicle speed and maintain the vehicle speed as the new set vehicle speed. When the Cruise Control System is engaged, momentarily pressing the − SET switch will allow the vehicle to decelerate at a vehicle specific calibratable increment, commonly 1.6 km/h (1 mph), each time that the − SET is momentarily pressed, with a minimum vehicle speed of 38 km/h (24 mph). Refer to the vehicle Owner's Manual for more information.

Pressing and holding the + RES switch, when the Cruise Control System is engaged, will allow the vehicle to accelerate to a greater vehicle speed than the current set vehicle speed. When the + RES switch is released, the ECM will record the vehicle speed and maintain the vehicle speed as the new set vehicle speed. When the Cruise Control System is engaged, momentarily pressing the + RES switch will allow the vehicle to accelerate at a vehicle specific calibratable increment, commonly 1.6 km/h (1 mph), each time that the + RES switch is momentarily pressed. Momentarily activating the + RES switch will recall the previous vehicle speed, after the cruise control system has been disengaged by pressing the brake pedal, or CANCEL switch. Refer to the vehicle Owner's Manual for more information.

Cruise Control Disengaged

The engine control module (ECM) disengages the cruise control operation based on the signals from the following switches:

- The brake pedal position (BPP) sensor
- The On/Off switch
- The cruise control cancel switch

The Cruise Control System will disengage when the brake pedal is applied. The body control module (BCM) monitors the BPP sensor via the BPP sensor signal circuit as the voltage signal increases while the pedal is further applied. The ECM monitors the BPP signal through a discrete input and a serial data message signal from the BCM indicating the brake status. When either signal indicates the brake pedal is applied, the ECM will disengage the cruise control system.

The Cruise Control System will also disengage when the cruise control on/off switch is switched OFF, or the cruise control cancel switch is activated. The body control module (BCM) determines when the cruise control cancel switch is activated. When the normally open cancel switch is closed, the BCM detects the predetermined voltage signal on the cruise control function switch circuit. The vehicle speed stored in the memory of the engine control module will be erased when the cruise control On/Off switch is turned OFF, or the ignition switch is turned OFF. The BCM sends a serial data message to the ECM in order to disengage the cruise control system. When the Cruise Control System has been disengaged, the ECM sends a serial message to the instrument panel cluster (IPC) in order to turn OFF the Cruise Engaged indicator.

Every time the Cruise Control System is disengaged, the ECM will keep track of the reason for system disengagement. The last 8 disengagement reasons will be recorded within the ECM memory. The scan tool will display the last 8 Cruise Disengage History parameters, in which one out of approximately 50 possible reasons will be displayed in each of these 8 parameters. For the disengagement reason to be displayed within the scan tool parameter the Cruise Control System is active and disengagement is requested.

When engagement of the system is requested but an engagement inhibit is present, the most recent inhibit reason is recorded in the ECM history. The scan tool will display the most recent inhibit reason, in which one out of approximately 50 possible reasons will be displayed.

Cruise Control Inhibited

The engine control module (ECM) inhibits the cruise control operation when any of the following conditions exist:

- The ECM has not detected a brake pedal activation from the body control module (BCM) this ignition cycle.
- A Cruise Control System DTC has been set.
- The vehicle speed is less than 38.6 km/h (24 mph).

- The vehicle speed is too high.
- The vehicle is in PARK, REVERSE, NEUTRAL, or 1st gear.
- The engine RPM is low.
- The engine RPM is high.
- The system voltage is not between 9 volts and 16 volts.
- The Antilock Brake System (ABS)/Traction Control System (TCS) is active for more than a calibratable time (typically 0.3 to 0.7 seconds).

Cruise Control Inhibit Reasons

This is a general list of inhibit reasons. Not every inhibit reason is applicable to all vehicles. Refer to the scan tool inhibit reason list for the last 8 reasons that have been recorded during the current ignition cycle.

Scan Tool Name	Description	Long Description
ACC BRAKE INOP	Adaptive Cruise Control Automatic Braking Failed	Adaptive Cruise Control Automatic Braking Inoperative
ACC DATA	Serial data fault for Adaptive Cruise Control Throttle Control and Brake Control signals sent by Adaptive Cruise Control module	Adaptive Cruise Control Module serial data fault is active or communication has been lost between ACC module and ECM.
ACC INHIBIT	Adaptive Cruise Control Inhibited	Adaptive Cruise Control Inhibited
ACC OPTION	Adaptive Cruise Control option mismatch	Cruise control type (adaptive cruise or conventional cruise) mismatched between ECM and BCM.
ACCEL RATE	High acceleration	Vehicle acceleration rate is too high.
Accel Time	Rate Limiting Fault	Cruise torque request rate limiting active too long
APP OVERRIDE	Pedal greater than cruise (override)	Driver has overridden cruise control set speed with accelerator pedal for greater than an allowable time.
Auto Brk Data	Automatic Braking Engine Torque Request Signal Communication Malfunction	ECM to EBCM serial data fault is active or communication has been lost between ECM and EBCM.
AXLE RANGE	Rear Axle Low	Rear axle in low range
BPP DATA	DTC P0703 active or maximum time elapsed without receiving valid Brake Pedal Position signal.	Serial data fault is active or communication has been lost with module sending brake pedal apply state
BPP DTC	Brake Pedal Position signal invalid	Brake Pedal Apply Circuit fault has been detected.
BPP Not Learned	Brake Apply Sensor Home Position Not Learned	Brake Pedal Position Sensor Released Position Not Learned.
BRAKE	Brake pedal apply	Brake Pedal was applied.
Brk Ped Press	Brake Pedal Driver Applied Pressure Detected	A Brake Pedal Apply has been detected based on brake pedal pressure as measured by the EBCM.
Calc Eng Torque	Calculated Torque	Engine torque calculation is incorrect.
CANCEL	Cancel switch active	Cancel Switch was depressed.
CLUTCH	Clutch switch active	Clutch Pedal was applied.
COAST DISENGAGE	Coast disengage	Cruise control is in coast mode with the Set/ Coast switch depressed and is requesting no throttle
COAST SPEED LOW	Coast below low speed inhibit	Set / Coast switch was depressed. Vehicle slowed below minimum cruise operating speed.
Cruise Brk Inop	Brake System Malfunction	EBCM has detected a failure that does not allow automatic braking to be performed.

Scan Tool Name	Description	Long Description
CRUISE S/W	Sequence of completion checks	Cruise control software execution error has occurred.
CRUISE SW DATA	Serial data fault (Cruise switch serial communication fault)	Cruise switch serial data fault is active or communication has been lost with module sending cruise switch states
CRUISE SW. OFF	On/Off switch in Off state	Cruise On/Off switch turned Off
DECEL RATE	High deceleration	Vehicle deceleration rate is too high.
DLC OVERRIDE	ALDL	Scan Tool plugged into ALDL connector
DTC SET	Malfunction in PCM/ECM (DTC active)	DTC is active or in history that inhibits cruise control operation.
D WHL SPD HI	Driven Whl Spd Greater (wheel slip detection)	Driven wheel speed greater than Non Driven wheel speed (slip detection)
D WHL SPD LOW	Un-driven Whl speed Greater	Non Driven wheel speed greater than driven wheel speed
ECM INHIBIT	PCM/ECM inhibit (RAM corruption)	ECM internal communication error
ECM RESET	ECM Running Reset	ECM Running Reset occurred
ECT OVERTEMP	Engine metal overtemp active	Engine over temperature. Overheated.
ENG RUN TIME	Engine run time not elapsed	Engine has not been running long enough, typically five seconds.
ENGINE SPEED	Engine speed too low or too high	Engine RPM too low (near stall) or too high (near engine RPM fuel shutoff).
FIRST GEAR	1st Gear	Transmission is engaged in 1st gear
HIGH SPEED	Vehicle speed exceeds high speed threshold	Vehicle speed has exceeded maximum cruise operating speed
HIGH VOLTAGE	Voltage above high voltage threshold	Ignition Voltage High at ECM (typically 18 volts)
ILLEGAL MODE	Illegal cruise mode	Cruise control mode is incorrect based on switch states.
LOST FWD GEAR	Transmission in neutral. Reverse or park	Gear selector not in forward gear
LOW SPEED	Vehicle speed drops below low speed threshold	Vehicle speed dropped below the cruise control minimum operating speed. May be due to hilly terrain and low vehicle speed. Manual transmission gear selection and engine torque may contribute to this disengagement reason.
LOW VOLTAGE	Voltage below low voltage threshold	Ignition Voltage Low at ECM (typically 9 volts)
MEMORY DTC	Memory Failure	Control module memory failure detected.
MPH LIMIT	MPH Limited Fuel (Vehicle overspeed fuel cut-off active)	Vehicle overspeed protection active with fuel cut off active
M/T Gear Changed	Manual transmission out of gear with no clutch pedal apply	Manual transmission shifted to Neutral without clutch pedal being applied.
NONE	None	This disengagement reason may be displayed after a dead battery repair or module replacement.
OVER SET SPEED	Over schedule	Vehicle speed has exceeded driver selected set speed by more than an allowable amount. This may occur while driving down a significant grade or driver overriding cruise while performing a passing maneuver.
PARK BRAKE	Park Brake Switch signal Active	Parking Brake Applied
PEDAL INITIALIZE	Brake before cruise	The brake pedal has not been seen as applied prior to driver request to engage cruise with set switch. A brake pedal apply must be seen before allowing cruise engagement during each key cycle. On a vehicle equipped with a manual transmission, a clutch pedal apply may satisfy the brake pedal apply criteria.
PTO ACTIVE	Power Take Off Active	Power Take Off is active.

Scan Tool Name	Description	Long Description
Ram DTC	Processor Integrity Fault (Ram corruption)	ECM software error has occurred
RPM LIMIT	Injectors Disabled (Engine overspeed fuel cut-off active)	Engine RPM limiter active with fuel cut off active.
S/C ON SPEED HI	Over schedule tap-down	Set/Coast switch selected, vehicle speed is above set speed and does not decrease. May be due to traveling down hill
SIMUL S/C-R/A	SET and RESUME switches simultaneously active	Set/Coast and Resume Accelerate switches pressed simultaneously
SL/W Sys On	Speed Limiter / Warning On/Off switch turned on	Driver has turned on the Speed Limiter/Warning on/off switch. Cruise is disabled / inhibited and cruise on/off switch will be set to OFF.
SW. INVALID	Analog cruise switch input out of range	Cruise switch voltage signal in invalid range
TAC INHIBIT	ETC prevents cruise operation	Electronic Throttle Control has detected a failure in the throttle control hardware
TCS	Traction control active	Traction Control was Active
TRANS DTC	Trans Gear Fault	Transmission DTC is active or in history that inhibits cruise control operation
UNDER SET SPEED	Under schedule	Vehicle speed is below cruise control set speed by more than an allowable amount
VSES	Vehicle stability active	Vehicle Stability Control was active
4WD Low	4WD Low	Transfer case in low range

Hybrid/EV Controls

Specifications

Fastener Tightening Specifications

Application	Specification	
	Metric	English
300 Volt High Voltage Cable Connector Fastener	9 N•m	80 lb in
APM Ground Cable Fastener	22 N•m	16 lb ft
APM Module Retainer Tray Fasteners	22 N•m	16 lb ft
Battery Cable to Drive Motor Generator Power Inverter Module Case Ground Fastener	9 N•m	80 lb in
Drive Motor Battery Charger Mounting Fasteners	22 N•m	16 lb ft
Drive Motor Battery Mounting Fastener	56 N•m	41 lb ft
Drive Motor Generator Power Inverter Module Mounting Fastener	22 N•m	16 lb ft
Engine Control Module (ECM) Bracket Fastener	9 N•m	80 lb in
Engine Wiring Harness Terminal to Drive Motor Generator Power Inverter Module Case Ground Fastener	9 N•m	80 lb in
High Voltage Battery Disconnect Control Module Mounting Fastener	22 N•m	16 lb ft
High Voltage Disconnect Circuit Cover Fastener	9 N•m	80 lb in
Transmission 3–Phase Cable Connector Fastener	9 N•m	80 lb in

Schematic and Routing Diagrams

Hybrid/EV Controls Schematics (ECM Power, Ground and Data Communication)

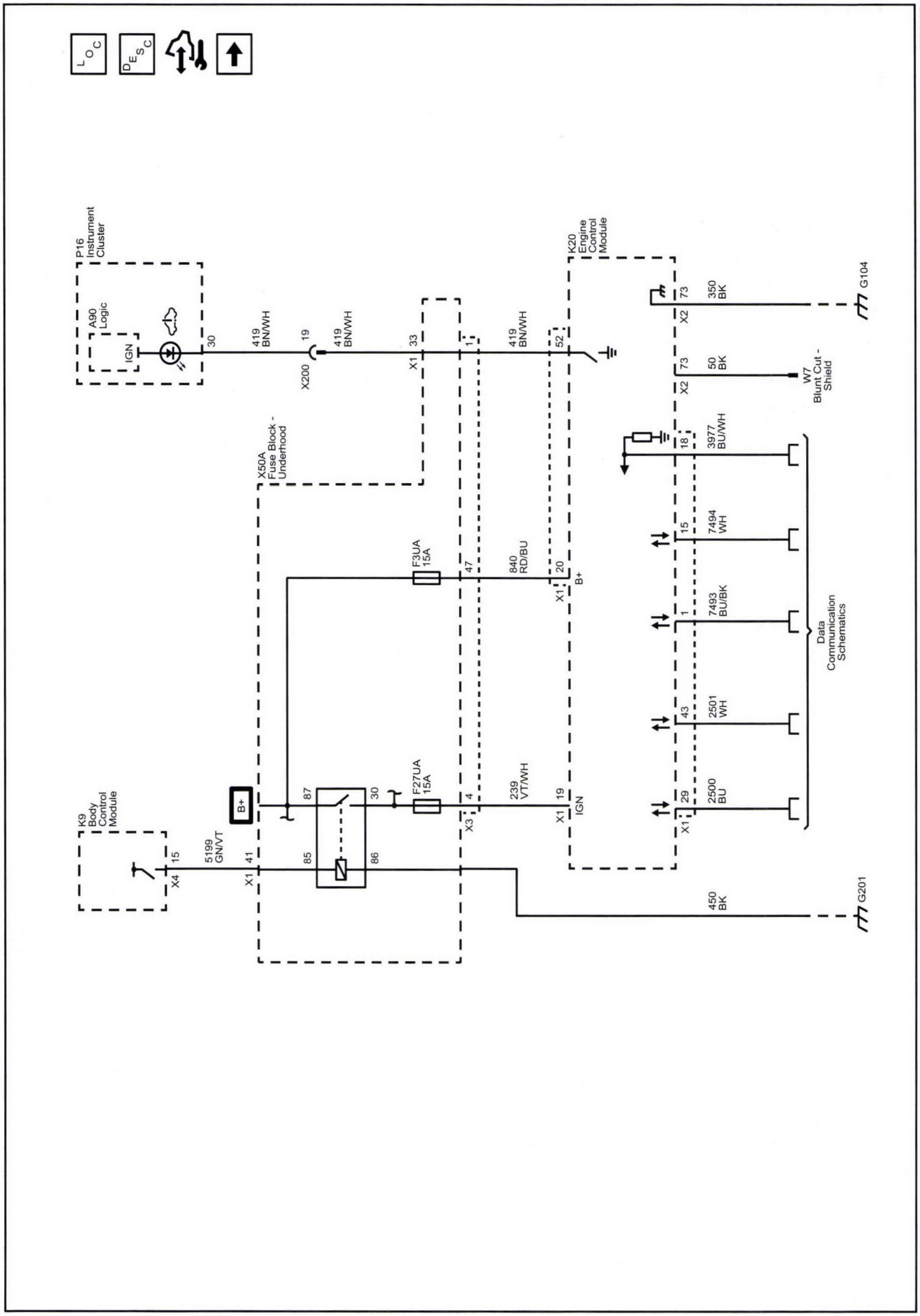

Hybrid/EV Controls Schematics (ECM 5-Volt and Low Reference Busses)

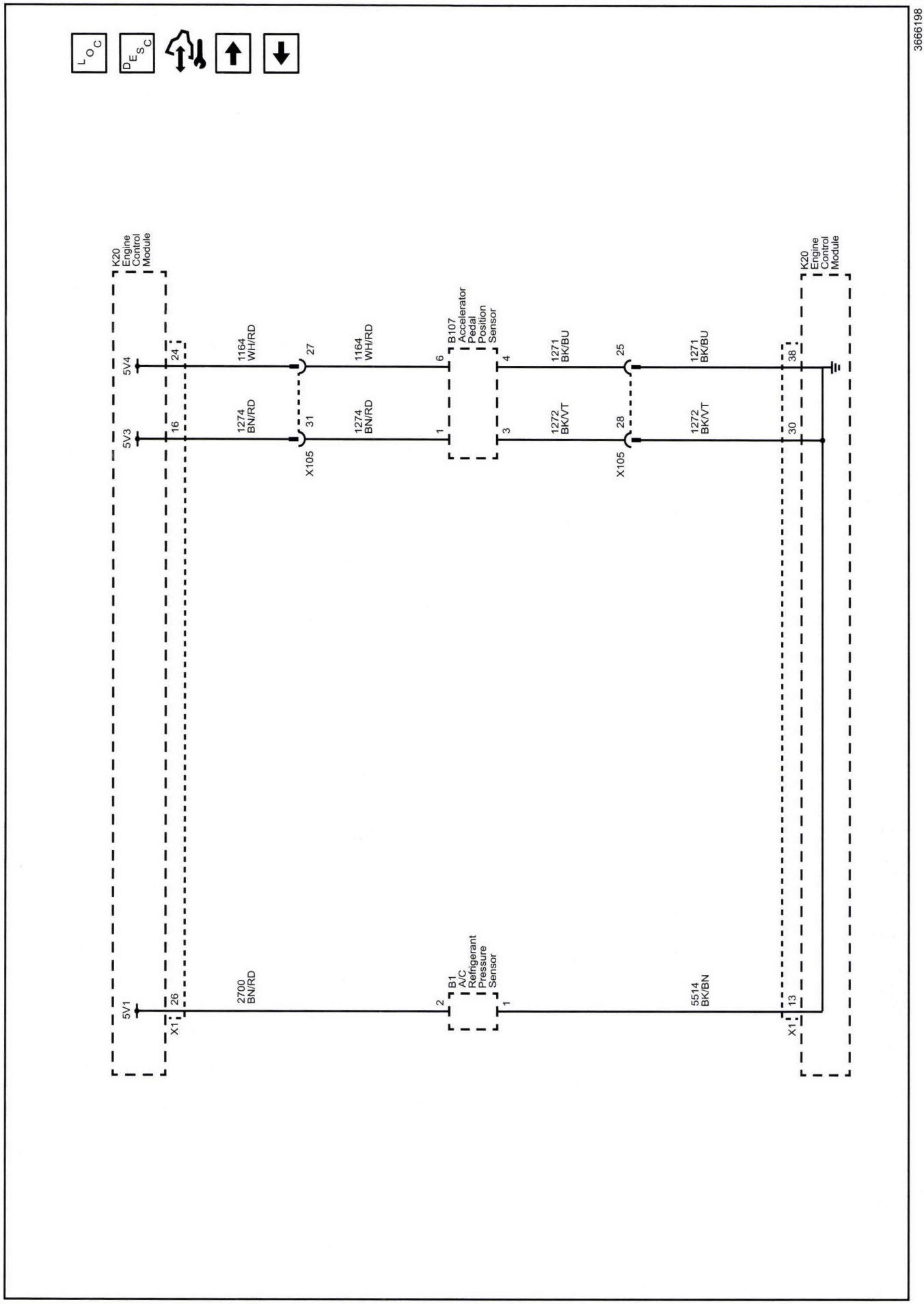

Hybrid/EV Controls Schematics (ECM Engine Data Sensors - Throttle Controls)

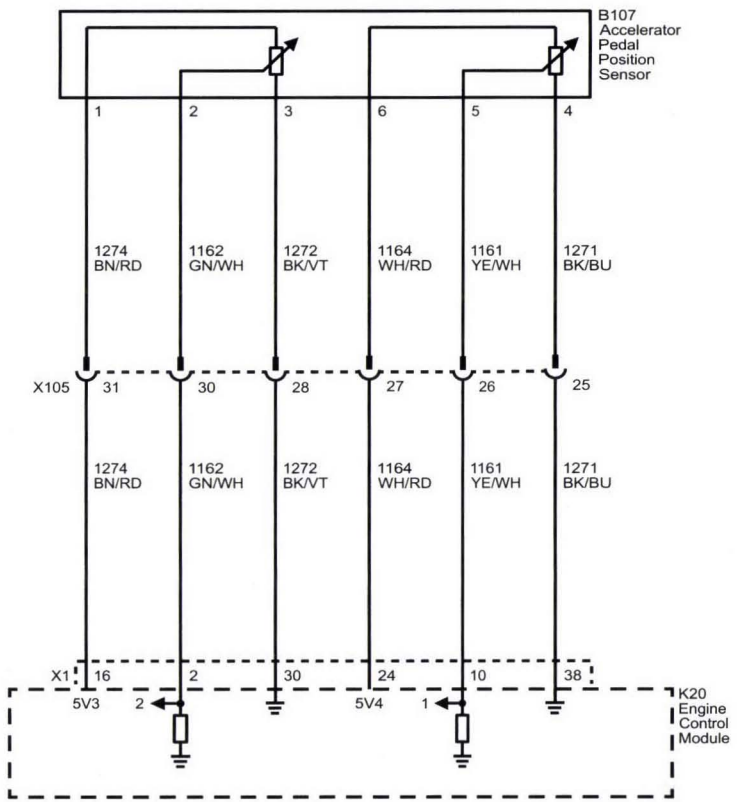

3666199

Hybrid/EV Controls Schematics (ECM Controlled/Monitored Subsystem References)

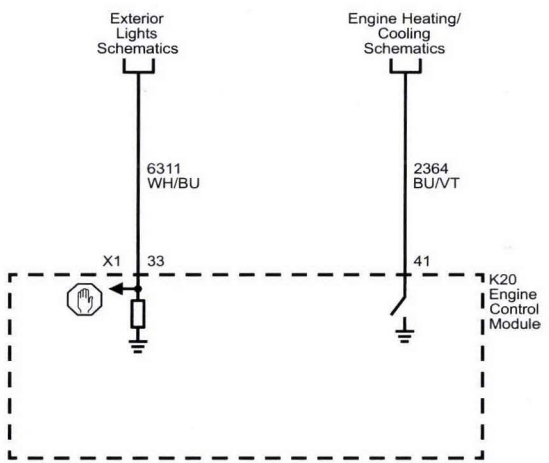

Hybrid/EV Controls Schematics (Hybrid/EV Powertrain Control Module 1/Power Inverter Module Power, Ground, and Data Communication)

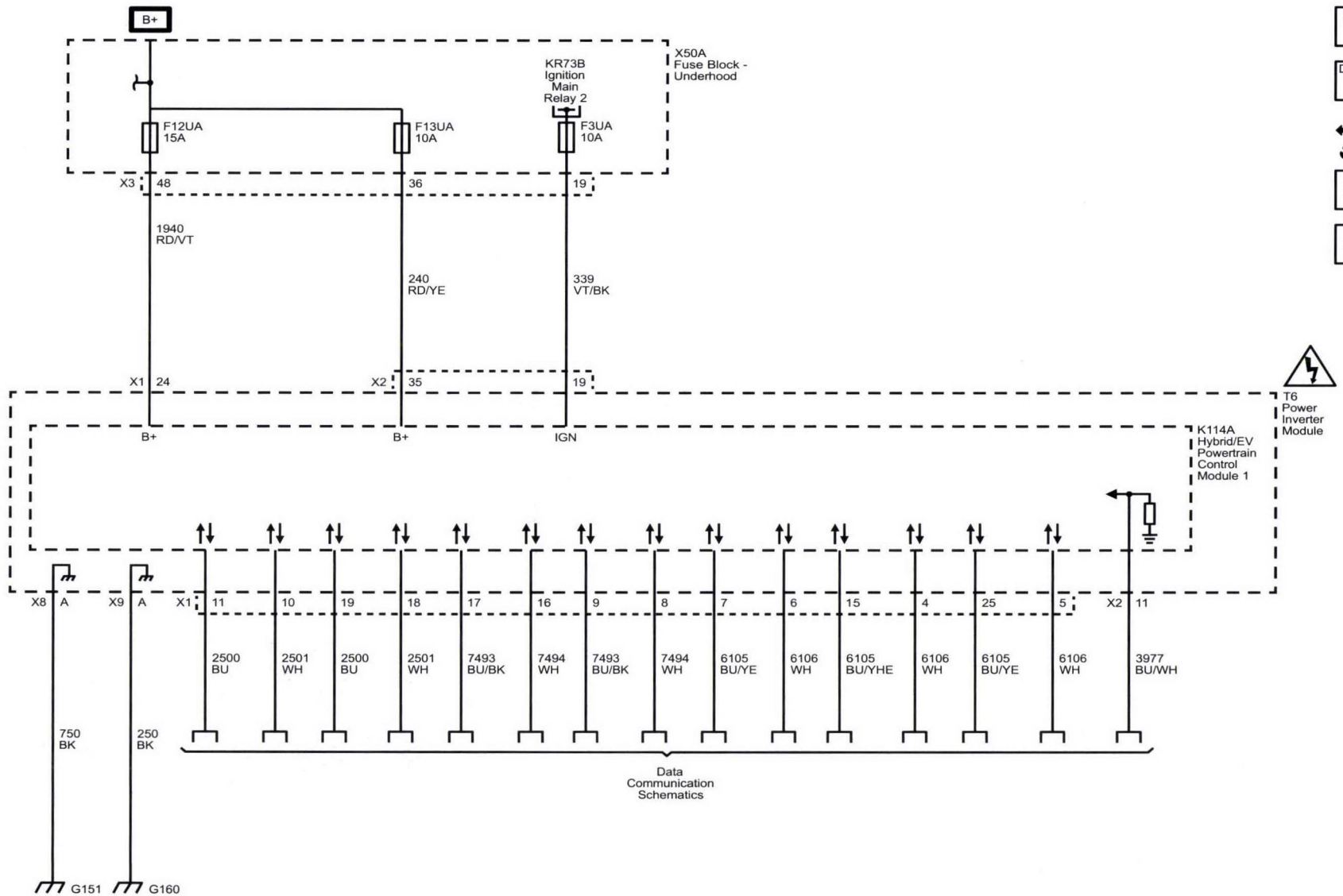

3666201

Hybrid/EV Controls Schematics (14V Power Module)

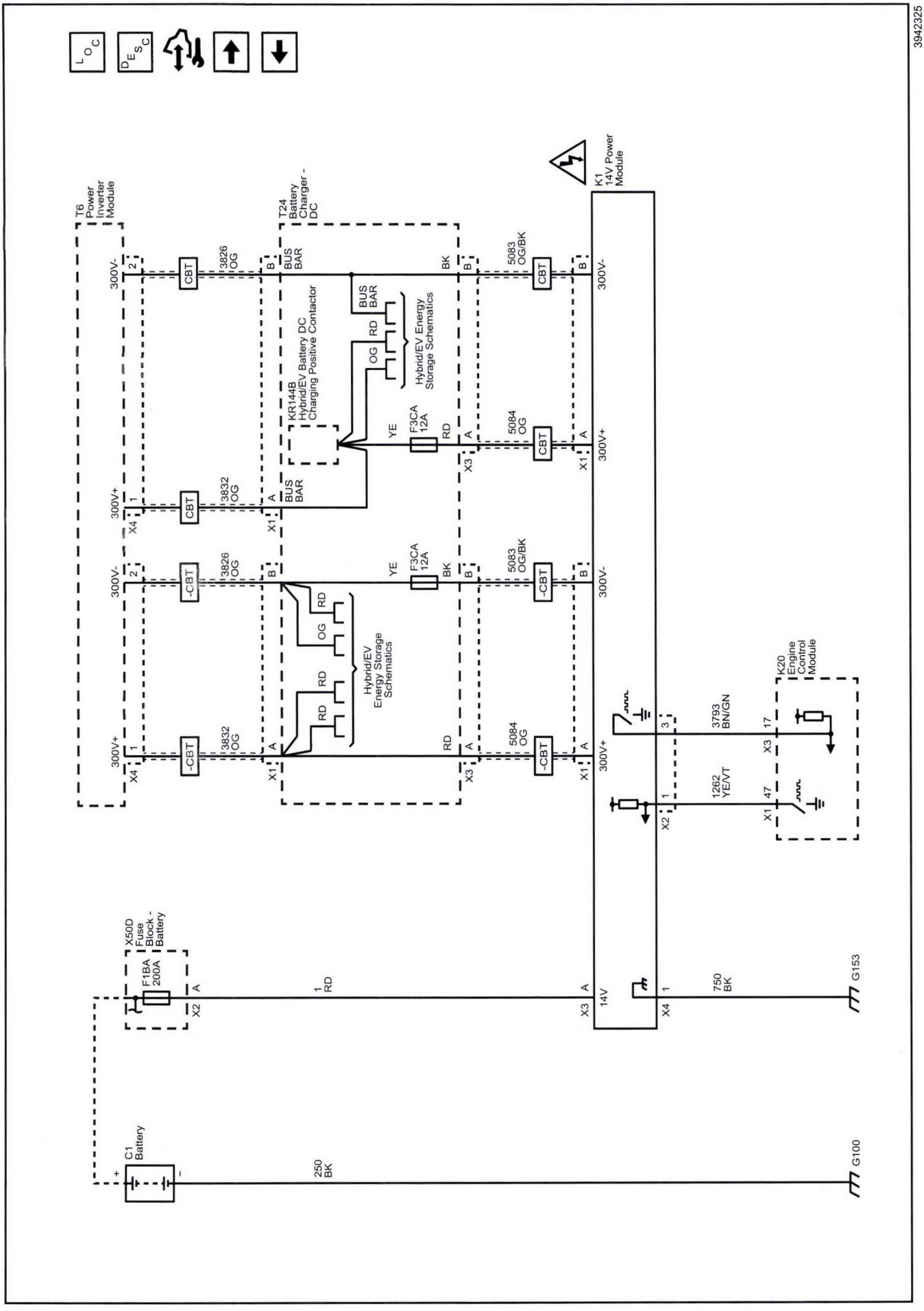

Hybrid/EV Controls Schematics (Drive Mode Select Switch and Multifunction Switch)

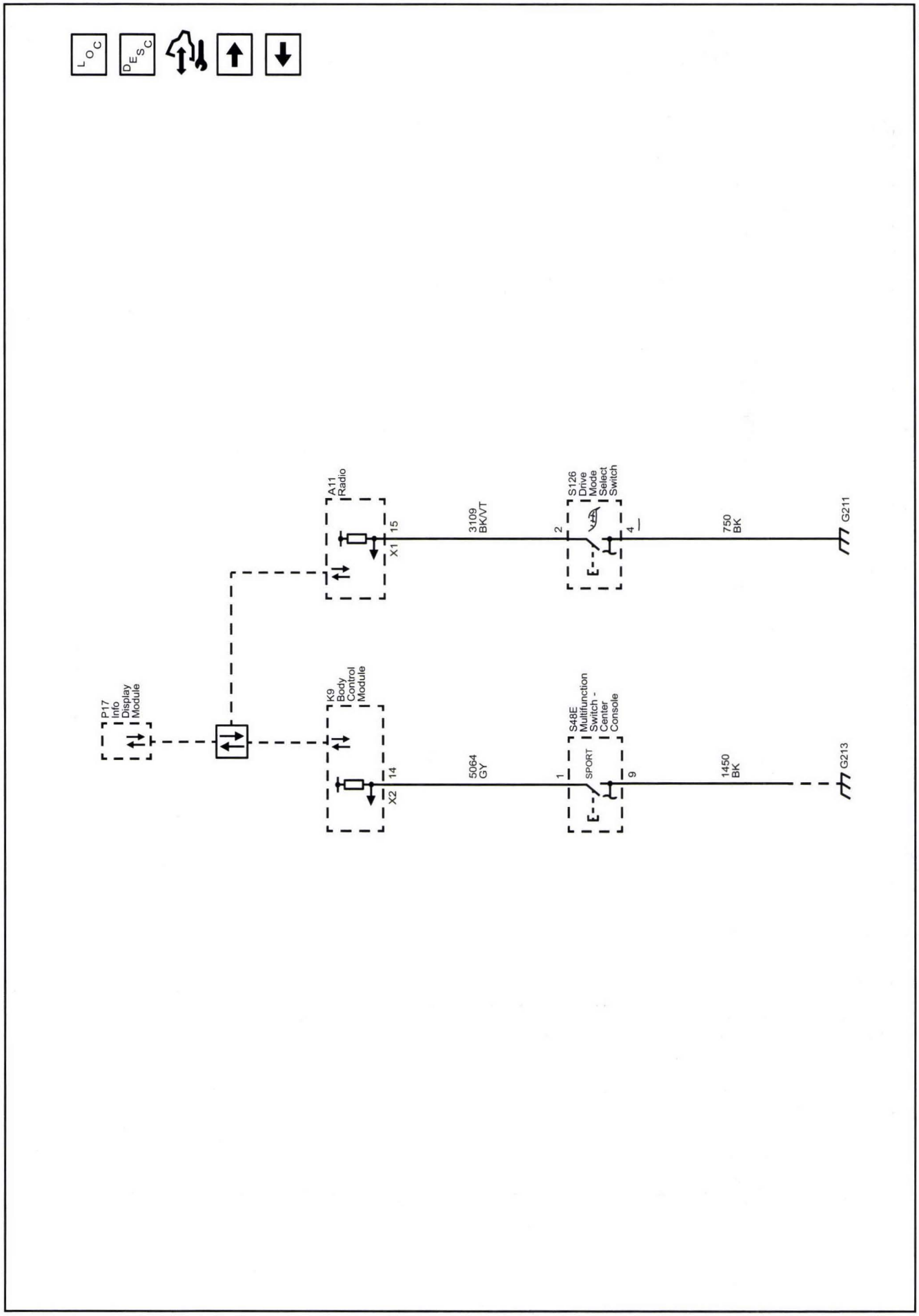

Hybrid/EV Controls Schematics (Drive Motor Monitoring)

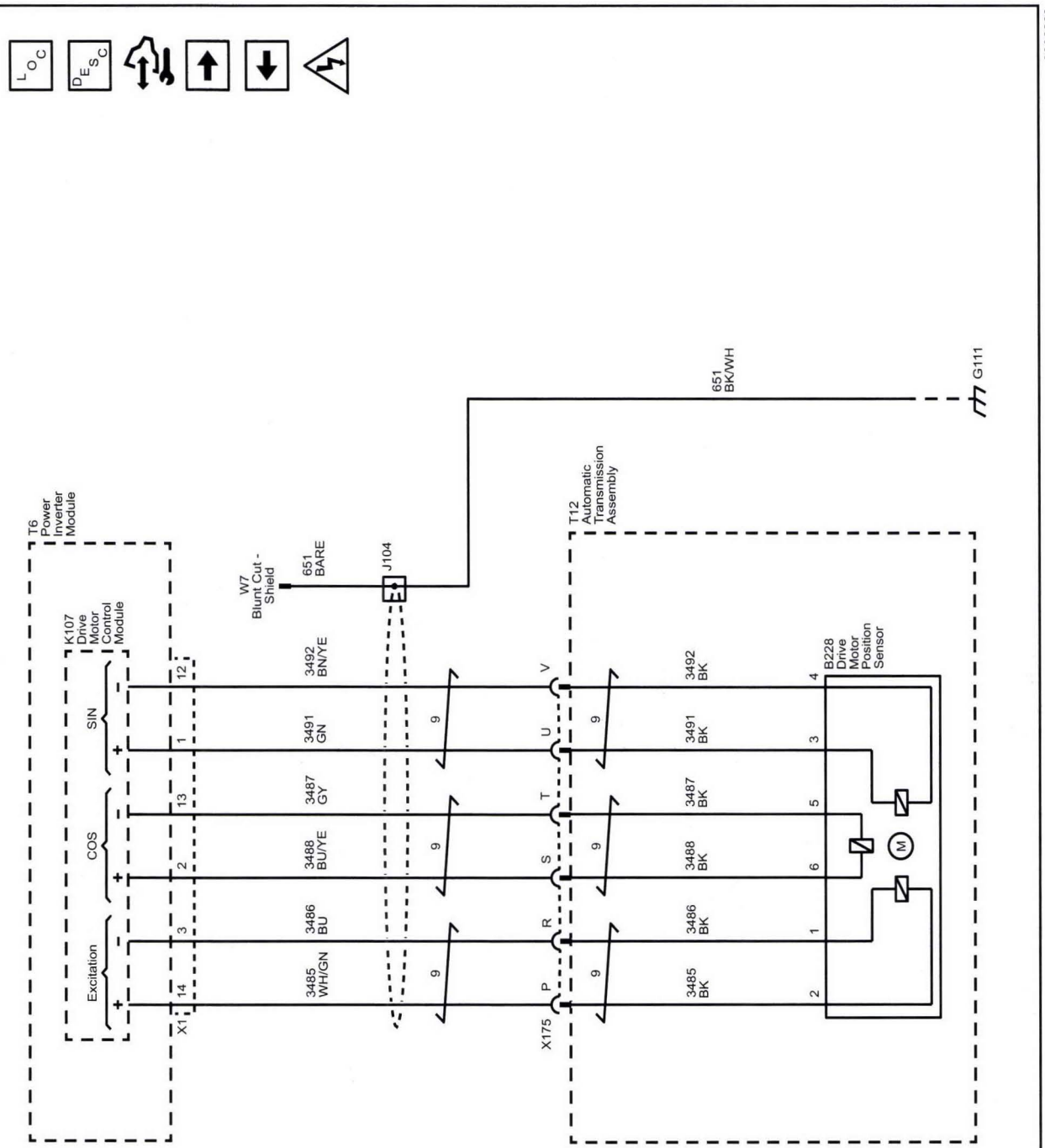

Hybrid/EV Controls Schematics (Drive Motor and Transmission Fluid Pump Controls)

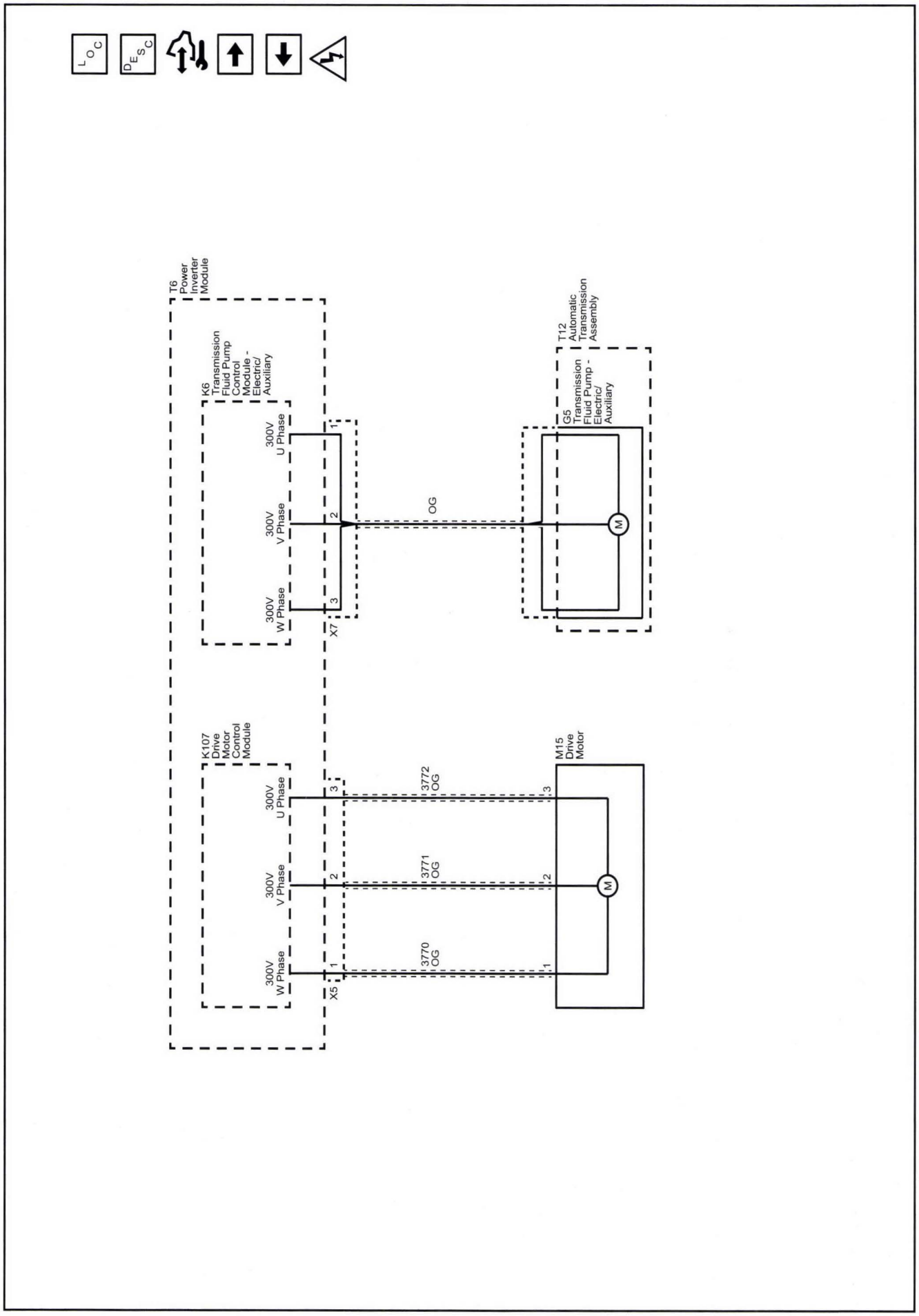

Hybrid/EV Controls Schematics (Transmission Internal Mode Switch)

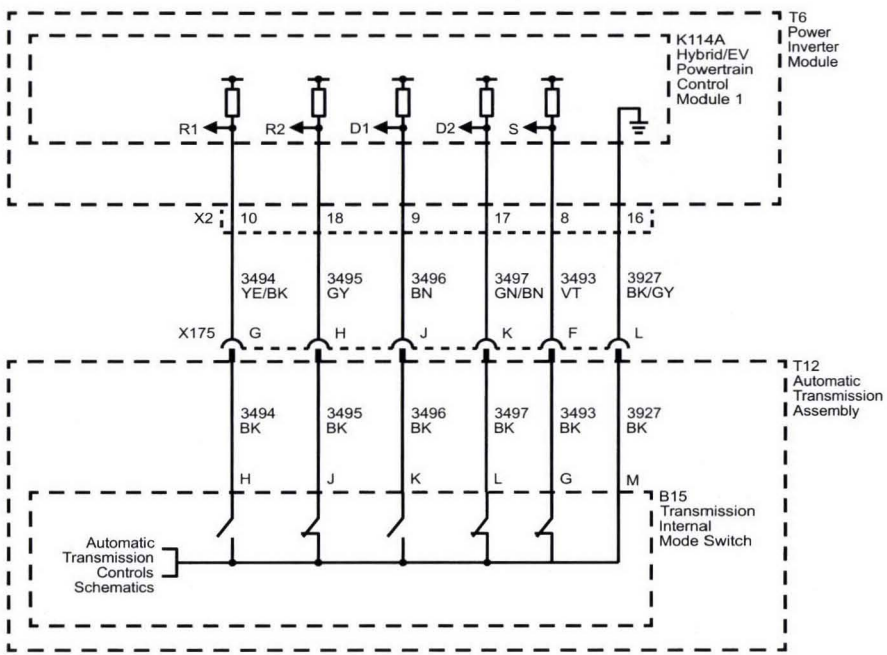

3666205

Component Locator

Hybrid Controls Electronic Component Views

Hybrid Control Electronic Component Views

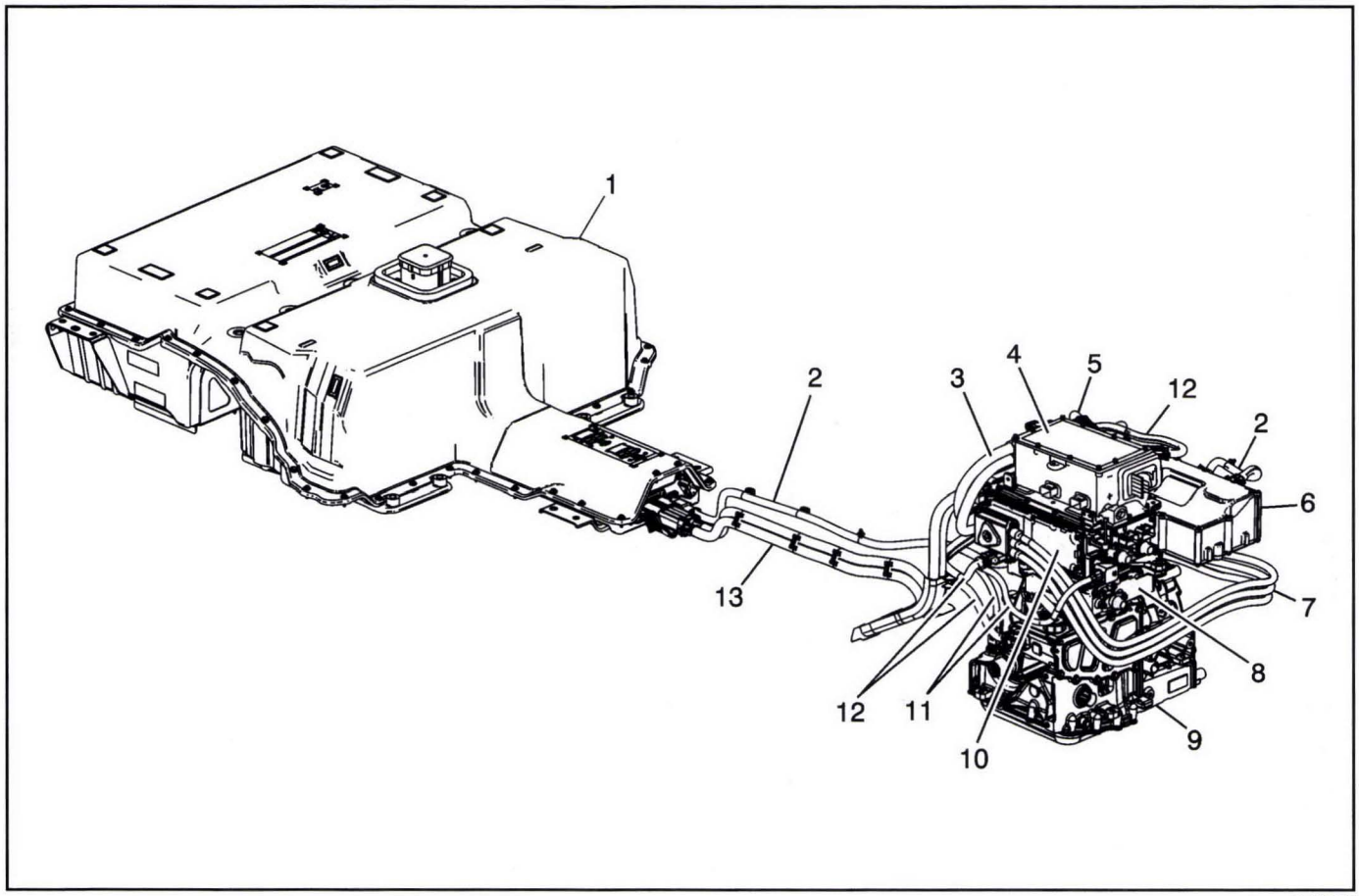

3469006

Legend

(1) Drive Motor Battery Assembly
(2) Drive Motor Battery Charger Cable Assembly
(3) Drive Motor Generator Battery Positive (300 V) Cable Assembly
(4) High Voltage DC Charger
(5) Battery Positive and Negative (300 V) Cable Assembly
(6) Drive Motor Battery Charger Module – OBCM
(7) Drive Motor Power Inverter Module 3 Phase Cable Assembly
(8) Accessory DC Power Control Module Assembly
(9) Automatic Transaxle Assembly
(10) Drive Motor Power Inverter Module Assembly
(11) Automatic Transaxle Fluid Pump Motor Cable Assembly
(12) ACCM & APM Cable Assembly
(13) Drive Motor Battery Positive and Negative Cable Assembly

Diagnostic Information and Procedures

DTC P0601-P0606, P060A, P062F, or P262B (Hybrid Powertrain Control Module 1)

Diagnostic Instructions

- Perform the *Diagnostic System Check - Vehicle on page 6-91* prior to using this diagnostic procedure.
- Review *Strategy Based Diagnosis on page 6-83* for an overview of the diagnostic approach.
- *Diagnostic Procedure Instructions on page 6-84* provides an overview of each diagnostic category.

DTC Descriptors

DTC P0601: Control Module Read Only Memory Performance
DTC P0602: Control Module Not Programmed
DTC P0603: Control Module Long Term Memory Reset
DTC P0604: Control Module Random Access Memory Performance
DTC P0606: Control Module Processor Performance
DTC P062F: Control Module Long Term Memory Performance

Circuit/System Description

This is an internal fault detection of the hybrid/EV powertrain control module 1. The hybrid/EV powertrain control module 1 is internal to the power inverter module, often referred to as the drive motor generator power inverter module, and is not serviced separately. This fault is handled inside the power inverter module, and no external circuits are involved.

Conditions for Running the DTC

P0601–P0604, P061A, and P061B:

- The vehicle is ON.
- The system voltage is greater than 9.5 V.

P0606:

This diagnostic is executed at system power-up; both at vehicle ON and at the start of a plug in charging event.

Conditions for Setting the DTC

P0601–P0604, P061A, and P061B:

The control module has detected an internal malfunction or a service module has been installed but not yet programmed.

P0606:

The fault has been detected 3 consecutive times.

Action Taken When the DTC Sets

- P0601–P0606, P061A, and P061B are Type A DTCs.
- P062F is a Type B DTC.
- When the DTC P0601, P0604, P0602, or P0606 sets, the hybrid/EV powertrain control module 1 requests the hybrid/EV powertrain control module 2 to open the high voltage contactor relays.

Conditions for Clearing the DTC

- P0601–P0606, P061A, and P061B are Type A DTCs.
- P062F is a Type B DTC.

Reference Information

DTC Type Reference

Powertrain Diagnostic Trouble Code (DTC) Type Definitions on page 6-92

Circuit/System Verification

1. Vehicle ON.
2. Verify DTC P0562 is not set.

⇒ **If the DTC is set**

Refer to *DTC B1325, B1330, B1517, C0800, C0899, C0900, C12E1, C12E2, P0561-P0563, P1A0C, P1A0D, or P1EFC on page 9-9*.

⇓ **If the DTC is not set**

3. Verify DTC P0602 is not set.

⇒ **If the DTC is set**

3.1. Program the T6 Power Inverter Module.
3.2. Verify the DTC does not set.

⇒ If the DTC is set, replace the T6 Power Inverter Module.

⇓ If the DTC does not set

4. All OK.

⇓ **If the DTC is not set**

5. Verify DTC P0601, P0603, P0604, P0606, or P062F is not set.

⇒ **If the DTC P0601, P0603, P0604, P0606, or P062F is set**

Replace the T6 Power Inverter Module.

⇓ **If the DTC is not set**

6. All OK.

Repair Instructions

Perform the *Diagnostic Repair Verification on page 6-123* after completing the repair.

Control Module References on page 6-3 for T6 Power Inverter Module, often referred to as the Drive Motor Generator Power Inverter Module, replacement, programming, and setup.

DTC P0601-P0604, P0606, P062F, P0630, P16F3, or P262B (ECM)

Diagnostic Instructions

- Preform the *Diagnostic System Check - Vehicle on page 6-91* prior to using this diagnostic procedure.
- Review *Strategy Based Diagnosis on page 6-83* for an overview of the diagnostic approach.
- *Diagnostic Procedure Instructions on page 6-84* provides an overview of each diagnostic category.

DTC Descriptors

DTC P0601: Control Module Read Only Memory Performance
DTC P0602: Control Module Not Programmed
DTC P0603: Control Module Long Term Memory Reset
DTC P0604: Control Module Random Access Memory Performance
DTC P0606: Control Module Processor Performance
DTC P062F: Control Module Long Term Memory Performance
DTC P0630: VIN Not Programmed or Mismatched – Engine Control Module (ECM)
DTC P16F3: Control Module Redundant Memory Performance
DTC P262B: Control Module Power Off Timer Performance

Circuit/System Description

This diagnostic applies to internal microprocessor integrity conditions within the engine control module (ECM). This diagnostic also addresses if the ECM is not programmed.

The ECM monitors its ability to read and write to the memory. It also monitors a timing function.

Conditions for Running the DTC

P0601, P0602, P0630, P16F3

- The vehicle is ON.
- These DTCs run continuously when the above condition is met.

P0603, P062F

- The vehicle is ON.
- These DTCs run once per ignition cycle.

P0604

- The vehicle is ON.
- DTC P0604 runs continuously when the above condition is met.

P0606

- The system voltage is greater than 11 V.
- DTC P0606 runs continuously when the above condition is met.

P262B

- Vehicle OFF.
- The ECM is not powered down.
- DTC P262B runs continuously when the above conditions are met.

Conditions for Setting the DTC

The ECM detects an internal failure or incomplete programming.

Action Taken When the DTC Sets

- DTCs P0601, P0602, P0603, P0604, P0606, P0630, and P16F3 are Type A DTCs.
- DTCs P062F and P262B is a Type B DTC.

Conditions for Clearing the DTC

- DTCs P0601, P0602, P0603, P0604, P0606, P0630, and P16F3 are Type A DTCs.
- DTCs P062F and P262B is a Type B DTC.

Diagnostic Aids

Low voltage or a momentary loss of power or ground to the ECM may cause a DTC to set. Verify the following:

- The battery cables are clean and tight, and the battery is fully charged. Refer to *Battery Inspection/Test on page 9-15*
- The ECM ground circuits do not have an open or high resistance.
- The ECM power circuits do not have an open, short to ground, or high resistance.

Reference Information

Schematic Reference

Hybrid/EV Controls Schematics on page 9-54

Connector End View Reference

Component Connector End Views on page 11-455

Description and Operation

Hybrid Modes of Operation Description

Electrical Information Reference

- *Circuit Testing on page 11-871*
- *Connector Repairs on page 11-895*
- *Testing for Intermittent Conditions and Poor Connections on page 11-877*
- *Wiring Repairs on page 11-883*

DTC Type Reference

Powertrain Diagnostic Trouble Code (DTC) Type Definitions on page 6-92

Scan Tool Reference

Control Module References on page 6-3 for scan tool information

Circuit/System Verification

1. Ignition ON.
2. Verify DTC P0602 or P0630 is not set.

⇒ **If the DTC is set**

2.1. Program the K20 ECM.

2.2. Verify the DTC does not set.

⇒ If the DTC sets, replace the K20 ECM.

⇓ If the DTC does not set

2.3. All OK.

⇓ **If the DTC is not set**

3. Verify DTC P0601, P0603, P0604, P0606, P062F, P16F3 or P262B is not set.

⇒ **If DTC P0601, P0603, P0604, P0606, P062F, P16F3 or P262B is set**

Replace the K20 ECM.

⇓ **If the DTC is not set**

4. All OK.

Repair Instructions

Perform the *Diagnostic Repair Verification on page 6-123* after completing the repair.

Control Module References on page 6-3 for ECM replacement, programming and setup.

DTC P061A or P061B

Diagnostic Instructions

- Perform the *Diagnostic System Check - Vehicle on page 6-91* prior to using this diagnostic procedure.
- Review *Strategy Based Diagnosis on page 6-83* for an overview of the diagnostic approach.
- *Diagnostic Procedure Instructions on page 6-84* provides an overview of each diagnostic category.

DTC Descriptors

DTC P061A: Control Module Torque System Circuitry Performance

DTC P061B: Control Module Torque Calculation Performance

Circuit/System Description

The hybrid/EV powertrain control module 1 is responsible for vehicle torque management. To accomplish this, the hybrid/EV powertrain control module 1 constantly monitors all aspects of requested and delivered torque from involved modules. If a torque management fault is detected, propulsion power will be reduced or shut down. The hybrid/EV powertrain control module 1 is internal to the power inverter module, often referred to as the drive motor generator power inverter module, and is not serviced separately. This fault is handled inside the power inverter module and no external circuits are involved.

Conditions for Running the DTC

- The vehicle is ON.
- The system voltage is at least 9.5 V.

Conditions for Setting the DTC

The control module has detected an internal malfunction.

Action Taken When the DTC Sets

- P061A or P061B are Type A DTCs.
- The hybrid/EV powertrain control module 1 requests the hybrid/EV powertrain control module 2 to open the high voltage contactor relays or regenerative braking will not be allowed.

Conditions for Clearing the DTC

P061A and P061B are Type A DTCs.

Diagnostic Aids

Low voltage or a momentary loss of power or ground to the hybrid/EV powertrain control module 1 may cause a DTC to set. Verify the following:

- The battery cables are clean and tight, and the battery is fully charged. Refer to *Battery Inspection/Test on page 9-15*.
- The hybrid/EV powertrain control module 1 ground circuits do not have an open or high resistance.
- The hybrid/EV powertrain control module 1 power circuits do not have an open, short to ground, or high resistance.

Reference Information

Electrical Information Reference

- *Circuit Testing on page 11-871*
- *Connector Repairs on page 11-895*
- *Testing for Intermittent Conditions and Poor Connections on page 11-877*
- *Wiring Repairs on page 11-883*

DTC Type Reference

Powertrain Diagnostic Trouble Code (DTC) Type Definitions on page 6-92

Circuit/System Verification

1. Vehicle ON.
2. Verify DTC P0562 is not set.

⇒ **If the DTC is set**

Refer to *DTC B1325, B1330, B1517, C0800, C0899, C0900, C12E1, C12E2, P0561-P0563, P1A0C, P1A0D, or P1EFC on page 9-9*.

⇓ **If the DTC is not set**

3. Verify DTC P061A or P061B is not set.

⇒ **If any of the DTCs are set**

Replace the T6 Power Inverter Module.

⇓ **If none of the DTCs are set**

4. All OK.

Repair Instructions

Perform the *Diagnostic Repair Verification on page 6-123* after completing the repair.

Control Module References on page 6-3 for T6 Power Inverter Module, often referred to as the Drive Motor Generator Power Inverter Module, replacement, programming, and setup.

DTC P0641, P0697, or P06A3

Diagnostic Instructions

- Perform the *Diagnostic System Check - Vehicle on page 6-91* prior to using this diagnostic procedure.
- Review *Strategy Based Diagnosis on page 6-83* for an overview of the diagnostic approach.
- *Diagnostic Procedure Instructions on page 6-84* provides an overview of each diagnostic category.

DTC Descriptor

DTC P0641: 5V Reference 1 Circuit

DTC P0697: 5V Reference 3 Circuit

DTC P06A3: 5V Reference 4 Circuit

Diagnostic Fault Information

Circuit	Short to Ground	Open/High Resistance	Short to Voltage	Signal Performance
5V Reference 1	P0641	P0641	P0641	P0641
5V Reference 3	P0697	P0697	P0697	P0697
5V Reference 4	P06A3	P06A3	P06A3	P06A3

Circuit/System Description

The ECM has four internal 5 V reference circuits. 5V reference circuit 2 is not used. Each 5V internal reference circuit provides a 5V bias voltage to the sensor it is connected to. An open, short to ground, or short to voltage on one external 5 V reference circuit can affect the component it is connected to.

Conditions for Running the DTC

DTCs P0641, P0697, and P06A3 run continuously when the Run/Crank Voltage is greater than 6.4V.

Conditions for Setting the DTC

The ECM detects the 5V reference 1, 3, or 4 circuit is not 4.8–5.2V for 0.2 s.

Action Taken When the DTC Sets

DTCs P0641, P0697, and P06A3 are Type A DTCs.

- Reduced torque performance.
- No creep or hill hold torque when the brake pedal is released.

Conditions for Clearing the DTC

DTCs P0641, P0697, and P06A3 are Type A DTCs.

Diagnostic Aids

P0641

The 5V reference 1 circuit provides 5V to the A/C Refrigerant Pressure Sensor.

P0697

The 5V reference 3 circuit provides 5V to the Accelerator Pedal Position Sensor 2.

P06A3

The 5V reference 4 circuit provides 5V to the Accelerator Pedal Position Sensor 1.

It may be possible to locate the fault by disconnecting one component at a time from the appropriate 5V reference circuit while viewing the corresponding 5-volt Reference 1, 3, 4 Circuit Status parameter on the scan tool. The scan tool parameter will change from Malfunction to OK when the source of the fault is disconnected. If all 5V reference components have been disconnected and a fault is still indicated, the fault may exist in the wiring harness.

Reference Information

Schematic Reference

Hybrid/EV Controls Schematics on page 9-54

Connector End View Reference

Component Connector End Views on page 11-455

Description and Operation

Hybrid Modes of Operation Description

Electrical Information Reference

- *Circuit Testing on page 11-871*
- *Connector Repairs on page 11-895*
- *Testing for Intermittent Conditions and Poor Connections on page 11-877*
- *Wiring Repairs on page 11-883*

DTC Type Reference

Powertrain Diagnostic Trouble Code (DTC) Type Definitions on page 6-92

Scan Tool Reference

Control Module References on page 6-3 for scan tool information

Circuit/System Verification

1. Verify the scan tool parameters listed below display OK:
   - 5V Reference 1 Circuit Status
   - 5V Reference 3 Circuit Status
   - 5V Reference 4 Circuit Status

⇒ **If not OK**

Refer to Circuit/System Testing.

⇓ **If OK**

2. Verify the scan tool parameters listed below display 4.8–5.2V:
   - 5V Reference 1
   - 5V Reference 3
   - 5V Reference 4

⇒ **If not between 4.8–5.2V**

Refer to Circuit/System Testing.

⇓ **If between 4.8-5.2V**

3. All OK.

Circuit/System Testing

Note: Additional DTCs will set when disconnecting components.

1. Vehicle in Service Mode.
2. Test for 4.8–5.2V between the 5V reference circuit terminals listed below and ground:
   - Accelerator Pedal Position Sensor X1 terminal 1
   - Accelerator Pedal Position Sensor X1 terminal 6
   - A/C Refrigerant Pressure Sensor X1 terminal 2

⇒ **If less than 4.8V**

2.1. Vehicle Off, disconnect the harness connector at the K20 ECM.

2.2. Test for infinite resistance between the 5V reference circuit and ground.

⇒ If less than infinite resistance, repair the short to ground on the circuit.

⇓ If infinite resistance

2.3. Test for less than 2 Ω in the 5V reference circuit end to end.

⇒ If 2 Ω or greater, repair the open/high resistance in the circuit.

⇒ If less than 2 Ω, replace the K20 ECM.

⇓ **If greater than 5.2V**

2.1. Ignition OFF, disconnect the harness connector at the K20 ECM, vehicle ON.

2.2. Test for less than 1V between the 5V reference circuit and ground.

⇒ If 1V or greater, repair the short to voltage on the circuit.

⇒ If less than 1V, replace the K20 ECM.

⇓ **If between 4.8–5.2V**

3. Replace the appropriate sensor.

Repair Instructions

Perform the *Diagnostic Repair Verification on page 6-123* after completing the repair.

- Accelerator Pedal Position Sensor Replacement
- Air Conditioning Refrigerant Pressure Sensor Replacement - High Pressure
- *Control Module References on page 6-3* for K20 ECM replacement, programming, and setup.

DTC P0650, P263A, or P263B

Diagnostic Instructions

- Perform the *Diagnostic System Check - Vehicle on page 6-91* prior to using this diagnostic procedure.
- Review *Strategy Based Diagnosis on page 6-83* for an overview of the diagnostic approach.
- *Diagnostic Procedure Instructions on page 6-84* provides an overview of each diagnostic category.

DTC Descriptor

DTC P0650: Malfunction Indicator Lamp (MIL) Control Circuit
DTC P263A: Malfunction Indicator Lamp (MIL) Control Circuit Low Voltage
DTC P263B: Malfunction Indicator Lamp (MIL) Control Circuit High Voltage

Diagnostic Fault Information

Circuit	Short to Ground	Open/High Resistance	Short to Voltage	Signal Performance
Ignition Voltage	P0650	P0650	—	—
MIL Control	P0650, P263A*	P0650, P263A	P263B	—
* The MIL remains ON				

Circuit/System Description

The MIL illuminates to inform the driver that a fault has occurred and a vehicle system requires service. Ignition voltage is supplied directly to the MIL and, when a fault occurs, the ECM turns the MIL ON by grounding the MIL control circuit. Under normal operating conditions, the MIL should be ON only during bulb check.

Conditions for Running the DTC

Remote Vehicle Start is not active.

P0650

Ignition voltage is greater than 11 V.

P263A and P263B

Run/Crank Voltage is greater than 11 V.

Conditions for Setting the DTC

P0650

The ECM detects low voltage during the MIL control circuit driver OFF state.

P263A

The ECM detects low voltage during the MIL control circuit driver OFF state.

P263B

The ECM detects high voltage on the MIL control circuit during the driver ON state.

Action Taken When the DTC Sets

- DTC P0650, P263A, and P263B are Type B DTCs.
- No MIL illumination.

Conditions for Clearing the DTC

DTC P0650, P263A, and P263B are Type B DTCs.

Diagnostic Aids

- If the condition is intermittent, move the related harnesses and connectors with the vehicle ON while monitoring the scan tool MIL control circuit status parameters. The MIL control circuit status parameters will change from OK or Not Run to Fault if there is a condition with the circuit or a connection.
- If the ECM detects low voltage on the MIL control circuit during the MIL control circuit driver OFF state, DTCs P0650 and DTC P263A may set simultaneously.

Reference Information

Schematic Reference

- *Hybrid/EV Controls Schematics on page 9-54*
- *Instrument Cluster Schematics on page 8-77*

Connector End View Reference

Component Connector End Views on page 11-455

Electrical Information Reference

- *Circuit Testing on page 11-871*
- *Connector Repairs on page 11-895*
- *Testing for Intermittent Conditions and Poor Connections on page 11-877*
- *Wiring Repairs on page 11-883*

DTC Type Reference

Powertrain Diagnostic Trouble Code (DTC) Type Definitions on page 6-92

Scan Tool Reference

Control Module References on page 6-3 for scan tool information

Circuit/System Verification

1. Vehicle ON, command the malfunction indicator lamp ON and OFF with a scan tool.
2. Verify that the malfunction indicator lamp turns ON and OFF as commanded.

⇒ **If the malfunction indicator lamp does not turn ON and OFF as commanded**

Refer to Circuit/System Testing.

⇓ **If the malfunction indicator lamp turns ON and OFF as commanded**

3. Vehicle ON, command the malfunction indicator lamp ON and OFF with a scan tool.
4. Verify that the control circuit status parameters listed below display OK or Not Run:
   - MIL Control Circuit Low Voltage Test Status
   - MIL Control Circuit Open Test Status
   - MIL Control Circuit High Voltage Test Status

⇒ **If Malfunction is displayed**

Refer to Circuit/System Testing.

⇓ **If OK or Not Run is displayed**

5. Vehicle ON, command the malfunction indicator lamp ON and OFF with a scan tool.
6. Verify that the control circuit status parameters listed below display OK or Not Run:
   - MIL Control Circuit Low Voltage Test Status
   - MIL Control Circuit Open Test Status
   - MIL Control Circuit High Voltage Test Status

⇒ **If Malfunction is displayed**

Refer to Circuit/System Testing.

⇓ **If OK or Not Run is displayed**

7. Operate the vehicle within the Conditions for Running the DTC to verify the DTC does not reset. You may also operate the vehicle within the conditions that you observed from the Freeze Frame/Failure Records data.

⇒ **If any DTC sets**

Refer to *Diagnostic Trouble Code (DTC) List - Vehicle on page 6-92* for further diagnosis.

⇓ **If a DTC does not set**

8. All OK.

Circuit/System Testing

1. Vehicle OFF.
2. Disconnect the X1 harness connector at the K20 ECM.
3. Vehicle in Service Mode, verify the malfunction indicator lamp does not illuminate.

⇒ **If the malfunction indicator lamp illuminates**

Test for infinite resistance between the malfunction indicator lamp control circuit X1 terminal 52 and ground.

⇒ If less than infinite resistance, repair the short to ground in the circuit.

⇒ If infinite resistance, replace the P16 instrument cluster.

⇓ **If the malfunction indicator lamp does not illuminate**

4. Connect a 3 A fused jumper wire between the malfunction indicator lamp control circuit X1 terminal 52 and ground.
5. Verify the malfunction indicator lamp illuminates.

⇒ **If the malfunction indicator lamp does not illuminate**

5.1. Test the malfunction indicator lamp control circuit X1 terminal 52 for a short to voltage or an open/high resistance.

⇒ If the malfunction indicator lamp control circuit X1 terminal 52 is shorted to voltage or has an open/high resistance, repair as necessary.

⇓ If the malfunction indicator lamp control circuit X1 terminal 52 tests normal

5.2. Test the instrument cluster ignition voltage circuit for a short to ground or open/high resistance.

⇒ If the instrument cluster ignition voltage circuit is shorted to ground or has an open/high resistance, repair as necessary.

⇒ If the instrument cluster ignition voltage circuit tests normal, replace the P16 instrument panel cluster.

⇓ **If the malfunction indicator lamp illuminates**

6. Replace the K20 ECM.

Repair Instructions

Perform the *Diagnostic Repair Verification on page 6-123* after completing the repair.

- *Instrument Cluster Replacement on page 8-95*
- *Control Module References on page 6-3* for K20 ECM replacement, programming, and setup.

DTC P06AF

Diagnostic Instructions

- Perform the *Diagnostic System Check - Vehicle on page 6-91* prior to using this diagnostic procedure.
- Review *Strategy Based Diagnosis on page 6-83* for an overview of the diagnostic approach.
- *Diagnostic Procedure Instructions on page 6-84* provides an overview of each diagnostic category.

DTC Descriptor

DTC P06AF: Torque Management System Performance - Forced Engine Shutdown

Circuit/System Description

The hybrid/EV powertrain control module 1 monitors a state of health message that the ECM transmits to verify the ECM is functioning properly. The hybrid/EV powertrain control module 1 is part of the power inverter module, often referred to as the drive motor generator power inverter module, and is not serviced separately.

Conditions for Running the DTC

- The system voltage is greater than 9.5 V.
- Vehicle is RunCrankActive for more than 0.1 s.

Conditions for Setting the DTC

The hybrid/EV powertrain control module 1 does not detect a valid state of health message from the ECM.

Action Taken When the DTC Sets

- DTC P06AF is a Type A DTC.
- The hybrid/EV powertrain control module 1 requests the hybrid/EV powertrain control module 2 to open the high voltage contactor relays.

Conditions for Clearing the DTC

DTC P06AF is a Type A DTC.

Reference Information

Schematic Reference

- *Hybrid/EV Controls Schematics on page 9-54*
- *Data Communication Schematics on page 11-6*

Connector End View Reference

Component Connector End Views on page 11-455

Electrical Information Reference

- *Circuit Testing on page 11-871*
- *Connector Repairs on page 11-895*
- *Testing for Intermittent Conditions and Poor Connections on page 11-877*
- *Wiring Repairs on page 11-883*

DTC Type Reference

Powertrain Diagnostic Trouble Code (DTC) Type Definitions on page 6-92

Scan Tool Reference

Control Module References on page 6-3 for scan tool information

Circuit/System Verification

1. Vehicle ON.
2. Verify ECM DTC P0606 is not set.

⇒ **If the DTC is set**

Refer to *DTC P0601-P0604, P0606, P062F, P0630, P16F3, or P262B (ECM) on page 9-67*.

⇓ **If the DTC is not set**

3. Verify DTC P06AF is not set.

⇒ **If the DTC is set**

3.1. Program the T6 Power Inverter Module.

3.2. Operate the vehicle within the Conditions for Running the DTC. You may also operate the vehicle within the conditions that you observed from the Freeze Frame/Failure Records data.

3.3. Verify the DTC does not set. If the DTC sets, continue to Circuit/System Testing.

⇓ **If the DTC is not set**

4. All OK.

Circuit/System Testing

Note: Perform Circuit/System Verification before Circuit/System Testing.

1. Vehicle OFF, remove the F103 Power Inverter Module Assembly Cable Cover. Refer to *High Voltage Disconnect Circuit Connector Cover Replacement on page 9-174*.
2. Disconnect the X1 harness connector at the T6 Power Inverter Module and disconnect the X1 harness at the K20 ECM.
3. Test for less than 2 Ω on the serial data circuits listed below end to end.
   - T6 Power Inverter Module X1 connector terminal 10 to K20 ECM X1 connector terminal 43
   - T6 Power Inverter Module X1 connector terminal 11 to K20 ECM X1 connector terminal 29

⇒ **If 2 Ω or greater**

Repair the open/high resistance in the circuit.

⇓ **If less than 2 Ω**

4. Replace the K20 ECM.
5. Operate the vehicle within the Conditions for Running the DTC. You may also operate the vehicle within the conditions that you observed from the Freeze Frame/Failure Records data.
6. Verify the DTC does not set.

⇒ **If the DTC sets**

Replace the T6 Power Inverter Module.

⇓ **If the DTC does not set**

7. All OK.

Repair Instructions

Perform the *Diagnostic Repair Verification on page 6-123* after completing the repair.

Control Module References on page 6-3 for K20 ECM or T6 Power Inverter Module, often referred to as the Drive Motor Generator Power Inverter Module, replacement, setup, and programming.

DTC P06B1, P06B2, P06E7, or P06E8

Diagnostic Instructions

- Perform the *Diagnostic System Check - Vehicle on page 6-91* prior to using this diagnostic procedure.
- Review *Strategy Based Diagnosis on page 6-83* for an overview of the diagnostic approach.
- *Diagnostic Procedure Instructions on page 6-84* provides an overview of each diagnostic category.

DTC Descriptor

DTC P06B1: Sensor Supply Voltage Circuit 1 Low Voltage
DTC P06B2: Sensor Supply Voltage Circuit 1 High Voltage
DTC P06E7: Sensor Supply Voltage Circuit 3 Low Voltage
DTC P06E8: Sensor Supply Voltage Circuit 3 High Voltage

Circuit/System Description

The motor control modules share an internal 15 V reference power supply in order to operate the drive motor and auxiliary transmission fluid pump processors. This fault is handled inside the power inverter module, often referred to as the drive motor generator power inverter module, and no external circuits are involved. The control modules listed below are part of the power inverter module and are not serviced separately:

- Hybrid/EV powertrain control module 1
- Drive motor control module
- Auxiliary transmission fluid pump control module

Conditions for Running the DTC

- The vehicle is ON.
- The system voltage is 8–18 V.

Conditions for Setting the DTC

P06B1 or P06E7

The reference voltage is less than 12 V for 1 second.

P06B2 or P06E8

The reference voltage is greater than 18 V for 1 second.

Action Taken When the DTC Sets

P06B1, P06B2, P06E7, and P06E8 are Type A DTCs.

Conditions for Clearing the DTC

P06B1, P06B2, P06E7, and P06E8 are Type A DTCs.

Diagnostic Aids

Low voltage or a momentary loss of power or ground to the hybrid/EV powertrain control module 1 may cause a DTC to set. Verify the following:

- The battery cables are clean and tight, and the battery is fully charged. Refer to *Battery Inspection/Test on page 9-15*.
- The hybrid/EV powertrain control module 1 ground circuits do not have an open or high resistance.
- The hybrid/EV powertrain control module 1 power circuits do not have an open, short to ground, or high resistance.

Reference Information

DTC Type Reference

Powertrain Diagnostic Trouble Code (DTC) Type Definitions on page 6-92

Circuit/System Verification

1. Vehicle ON.
2. Verify DTC P0562 is not set.

⇒ **If the DTC is set**

Refer to *DTC B1325, B1330, B1517, C0800, C0899, C0900, C12E1, C12E2, P0561-P0563, P1A0C, P1A0D, or P1EFC on page 9-9*.

⇓ **If the DTC is not set**

3. Verify DTC P06B1, P06B2, P06E7 or P06E8 is not set.

⇒ **If any of the DTCs are set**

3.1. Verify the DTC does not set.

⇒ If the DTC sets, replace the T6 Power Inverter Module.

⇓ If the DTC does not set.

3.2. All OK.

⇓ **If none of the DTCs are set**

4. All OK.

Repair Instructions

Perform the *Diagnostic Repair Verification on page 6-123* after completing the repair.

Control Module References on page 6-3 for T6 Power Inverter Module, often referred to as the Drive Motor Generator Power Inverter Module, replacement, programming, and setup.

DTC P0A1B

Diagnostic Instructions

- Perform the *Diagnostic System Check - Vehicle on page 6-91* prior to using this diagnostic procedure.
- Review *Strategy Based Diagnosis on page 6-83* for an overview of the diagnostic approach.
- *Diagnostic Procedure Instructions on page 6-84* provides an overview of each diagnostic category.

DTC Descriptor

DTC P0A1B: Drive Motor Control Module Performance

Circuit/System Description

This is a fault detection of the drive motor generator power inverter module's internal motor control module. This fault is handled inside the drive motor generator power inverter module, no external circuits are involved. The motor control module is part of the drive motor generator power inverter module, and is not serviced separately.

Conditions for Running the DTC

- The vehicle is ON.
- The system voltage is greater than 9.5 V.

Conditions for Setting the DTC

The control module has detected an internal malfunction.

Action Taken When the DTC Sets

- P0A1B is a Type A DTC.
- The hybrid/EV powertrain control module 1 commands the hybrid/EV powertrain control module 2 to open the high voltage contactor.

Conditions for Clearing the DTC

P0A1B is a Type A DTC.

Reference Information

DTC Type Reference

Powertrain Diagnostic Trouble Code (DTC) Type Definitions on page 6-92

Circuit/System Verification

1. Vehicle ON.
2. Verify DTC P0A1B is not set.

⇒ **If any of the DTCs are set**

2.1. Verify the DTC does not set.

⇒ If the DTC sets, replace the T6 Power Inverter Module.

⇓ If the DTC does not set

2.2. All OK.

⇓ **If none of the DTCs are set**

3. All OK.

Repair Instructions

Perform the *Diagnostic Repair Verification on page 6-123* after completing the repair.

Control Module References on page 6-3 for T6 Power Inverter Module, often referred to as the Drive Motor Generator Power Inverter Module replacement, programming and setup.

DTC P0A3F, P0A40, P0C52, P0C53, P0C5C, P0C5D, or P1B03

Diagnostic Instructions

- Perform the *Diagnostic System Check - Vehicle on page 6-91* prior to using this diagnostic procedure.
- Review *Strategy Based Diagnosis on page 6-83* for an overview of the diagnostic approach.
- *Diagnostic Procedure Instructions on page 6-84* provides an overview of each diagnostic category.

DTC Descriptor

DTC P0A3F: Drive Motor Position Sensor Circuit
DTC P0A40: Drive Motor Position Sensor Performance
DTC P0C52: Drive Motor Position Sensor Circuit 1 Low Voltage
DTC P0C53: Drive Motor Position Sensor Circuit 1 High Voltage
DTC P0C5C: Drive Motor Position Sensor Circuit 2 Low Voltage
DTC P0C5D: Drive Motor Position Sensor Circuit 2 High Voltage
DTC P1B03: Drive Motor Position Sensor Circuit Tracking Lost

Diagnostic Fault Information

Circuit	Short to Ground	Open/High Resistance	Short to Voltage	Signal Performance
Reference* – Excitation	P0A3F	P0A3F	P0A3F	P1B03, P0A40
Signal* – SIN	P0C52	P0A3F	P0C53, P0A3F	P1B03, P0A40
Signal* – COS	P0C5C	P0A3F	P0C5D, P0A3F	P1B03, P0A40
*Represents a differential circuit consisting of a pair of wires. See Circuit/System Description and schematic for detailed description.				

Circuit/System Description

The drive motor position sensor is monitored by the motor control module. The motor control module monitors the angular position, speed and direction of the drive motor rotor based upon the signals of the resolver-type position sensor. The position sensor contains a drive coil, two driven coils, and an irregular shaped metallic rotor. The metallic rotor is mechanically attached to the shaft of the drive motor. At vehicle ON, the motor control module outputs a 7 V AC, 12 kHz excitation signal to the drive coil. The drive coil excitation signal creates a magnetic field surrounding the two driven coils and the irregular shaped rotor. The motor control module then monitors the two driven coil circuits for return signals—Sine and Cosine waveforms, often referred to as SIN and COS. The position of the irregular metallic rotor causes the magnetically-induced return signals of the driven coils to vary in size and shape. A comparison of the two driven coil signals allows the motor control module to determine the exact position, speed and direction of the drive motor rotor. The drive motor position sensor is not serviceable separately from the drive motor assembly.

Conditions for Running the DTC

P0A3F, P0A40, or P1B03

The drive motor is operating.

P0C52, P0C53, P0C5C, or P0C5D

The vehicle is ON.

Conditions for Setting the DTC

P0C52, P0C5C

Circuit voltage is less than 0.5 V.

P0C53, P0C5D

Circuit voltage is greater than 4.5 V.

P0A3F

SIN or COS signal is less than 2.3 V. The motor control module cannot determine the motor position based upon the sensor signals.

P0A40

SIN or COS signal is greater than 4 V. The motor control module detects a degraded motor position sensor signal.

P1B03

The motor control module is unable to track the motor position based upon the sensor signals.

Action Taken When the DTC Sets

- DTCs P0A3F, P0A40 and P1B03 are Type A DTCs.
- DTCs P0C52, P0C53, P0C5C, and P0C5D are Type B DTCs.

Conditions for Clearing the DTC

- DTCs P0A3F, P0A40 and P1B03 are Type A DTCs.
- DTCs P0C52, P0C53, P0C5C, and P0C5D are Type B DTCs.

Diagnostic Aids

- The drive motor position sensor circuits operate at very low current. These circuits are susceptible to moisture intrusion, corrosion, and terminal damage. Extreme care must be taken when probing terminals and manipulating harnesses. Poor terminal connections can result in intermittent operation.
- If the customer comments that the problem occurs only during moist environmental conditions: rain, snow, vehicle wash, etc., inspect the sensor wiring for signs of water intrusion.
- The sensor circuit loops are a twisted pair with each pair covered in a foil shield. The shield circuits outside of the transmission are grounded to a stud on the power inverter module, often referred to as the drive motor generator power inverter module.
- The drive motor position sensor harness circuits are shielded. Improperly grounded shield circuits may cause inaccurate sensor signals.

Reference Information

Schematic Reference

Hybrid/EV Controls Schematics on page 9-54

Connector End View Reference

- *Component Connector End Views on page 11-455*
- *Inline Harness Connector End Views on page 11-761*

Electrical Information Reference

- *Circuit Testing on page 11-871*
- *Connector Repairs on page 11-895*
- *Testing for Intermittent Conditions and Poor Connections on page 11-877*
- *Wiring Repairs on page 11-883*

DTC Type Reference

Powertrain Diagnostic Trouble Code (DTC) Type Definitions on page 6-92

Scan Tool Reference

Control Module References on page 6-3 for scan tool information

Special Tools

DT-44152 Jumper Harness (20 Pins)

For equivalent regional tools, refer to *Special Tools on page 9-197*.

Circuit/System Testing

Note: You must perform the Component Testing before proceeding with Circuit/System Testing.

1. Vehicle OFF, disconnect the X175 harness connector at the transmission.
2. Install the *DT-44152* harness to the vehicle harness side only.
3. Vehicle ON.
4. Test for 0.8–1.4 V between the signal circuit terminals listed below and ground:
   - Signal (COS) circuit terminal S
   - Signal (COS) circuit terminal T
   - Signal (SIN) circuit terminal U
   - Signal (SIN) circuit terminal V

⇒ **If less than 0.8 V**

4.1. Vehicle OFF, disconnect the X1 harness connector at the T6 Power Inverter Module.

4.2. Test for infinite resistance between the signal circuit and ground.

⇒ If less than infinite resistance, repair the short to ground on the circuit.

⇓ If infinite resistance

4.3. Test for less than 2 Ω in the signal circuit end to end.

⇒ If 2 Ω or greater, repair the open/high resistance in the circuit.

⇒ If less than 2 Ω, replace the T6 Power Inverter Module.

⇒ **If greater than 1.4 V**

4.1. Vehicle OFF, disconnect the X1 harness connector at the T6 Power Inverter Module, Vehicle ON.

4.2. Test for less than 1 V between the signal circuit and ground.

⇒ If 1 V or greater, repair the short to voltage on the circuit.

⇒ If less than 1 V, replace the T6 Power Inverter Module.

⇓ **If between 0.8–1.4 V**

5. Test for 6.5–7.5 V between the reference circuit terminals listed below and ground:
   - Terminal V
   - Terminal U

⇒ **If less than 6.5 V**

5.1. Vehicle OFF, disconnect the X1 harness connector at the T6 Power Inverter Module.

5.2. Test for infinite resistance between the reference circuit and ground.

⇒ If less than infinite resistance, repair the short to ground on the circuit.

⇓ If infinite resistance

5.3. Test for less than 2 Ω in the reference circuit end to end.

⇒ If 2 Ω or greater, repair the open/high resistance in the circuit.

⇒ If less than 2 Ω, replace the T6 Power Inverter Module.

⇒ **If greater than 7.5 V**

5.1. Vehicle OFF, disconnect the X1 harness connector at the T6 Power Inverter Module, Vehicle ON.

5.2. Test for less than 1 V between the reference circuit and ground.

⇒ If 1 V or greater, repair the short to voltage on the circuit.

⇒ If less than 1 V, replace the T6 Power Inverter Module.

⇓ **If between 6.5–7.5 V**

6. All OK.

Component Testing

Note: If the a/trans wiring harness assembly circuits fail the circuit tests, replace the harness; do not repair.

1. Vehicle ON.
2. Verify that DTC P1AF0, P1B44, P1E1E, P1E22, P1B0B, or P1B0C is not set.

⇒ **If any of the DTCs are set**

Refer to *Diagnostic Trouble Code (DTC) List - Vehicle on page 6-92*.

⇓ **If none of the DTCs are set**

3. Vehicle OFF, disconnect the X175 harness connector at the transmission.
4. Install the *DT-44152* jumper harness to the transmission side only.
5. Test for 5–20 Ω between the reference circuit terminal V and the reference circuit terminal W.

⇒ **If less than 5 Ω**

5.1. Disconnect the X1 harness connector at the M15 Drive Motor.

5.2. Test for infinite resistance between the reference circuit terminal P and the reference circuit terminal R.

⇒ If less than infinite resistance, replace the a/trans wiring harness assembly.

⇒ If infinite resistance, replace the B228 Drive Motor Position Sensor.

⇒ **If greater than 20 Ω**

5.1. Disconnect the X1 harness connector at the M15 Drive Motor.

5.2. Test for less than 2 Ω in the reference circuits end to end.

⇒ If 2 Ω or greater, replace the a/trans wiring harness assembly.

⇒ If less than 2 Ω, replace the B228 Drive Motor Position Sensor.

⇓ **If between 5–20 Ω**

6. Test for 15–30 Ω between the signal (COS) circuit terminal S and the signal (COS) circuit terminal T.

⇒ **If less than 15 Ω**

6.1. Disconnect the X1 harness connector at the M15 Drive Motor.

6.2. Test for infinite resistance between the signal (COS) circuit terminal S and the signal (COS) circuit terminal T.

⇒ If less than infinite resistance, replace the a/trans wiring harness assembly.

⇒ If infinite resistance, replace the B228 Drive Motor Position Sensor.

⇒ **If greater than 30 Ω**

6.1. Disconnect the X1 harness connector at the M15 Drive Motor.

6.2. Test for less than 2 Ω in the signal circuits end to end.

⇒ If 2 Ω or greater, replace the a/trans wiring harness assembly.

⇒ If less than 2 Ω, replace the B228 Drive Motor Position Sensor.

⇓ **If between 15–30 Ω**

7. Test for 15–30 Ω between the signal (SIN) circuit terminal U and the signal (SIN) circuit terminal V.

⇒ **If less than 15 Ω**

7.1. Disconnect the X1 harness connector at the M15 Drive Motor.

7.2. Test for infinite resistance between the signal (SIN) circuit terminal U and the signal (SIN) circuit terminal V.

⇒ If less than infinite resistance, replace the a/trans wiring harness assembly.

⇒ If infinite resistance, replace the B228 Drive Motor Position Sensor.

⇒ **If greater than 30 Ω**

7.1. Disconnect the X1 harness connector at the M15 Drive Motor.

7.2. Test for less than 2 Ω in the signal circuits end to end.

⇒ If 2 Ω or greater, replace the a/trans wiring harness assembly.

⇒ If less than 2 Ω, replace the B228 Drive Motor Position Sensor.

⇓ **If between 15–30 Ω**

8. Test for greater than 10,000 Ω between the terminals listed below and ground:
   - Reference terminal P
   - Reference terminal R
   - Signal (COS) circuit terminal S
   - Signal (COS) circuit terminal T

- Signal (SIN) circuit terminal U
- Signal (SIN) circuit terminal V

⇒ **If less than 10,000 Ω**

8.1. Disconnect the X1 harness connector at the M15 Drive Motor.

8.2. Test for less than infinite resistance between the appropriate terminal and ground.

⇒ If less than infinite resistance, replace the a/trans wiring harness assembly.

⇒ If infinite resistance, replace the B228 Drive Motor Position Sensor.

⇓ **If 10,000 Ω or greater**

9. Test for infinite resistance between the terminals listed below:
   - Terminals V and T
   - Terminals V and R
   - Terminals U and P

⇒ **If less than infinite resistance**

9.1. Disconnect the X1 harness connector at the M15 Drive Motor.

9.2. Test for less than infinite resistance between the appropriate terminals.

⇒ If less than infinite resistance, replace the a/trans wiring harness assembly.

⇒ If infinite resistance, replace the B228 Drive Motor Position Sensor.

⇓ **If infinite resistance**

10. Refer to Circuit/System Testing.

Repair Instructions

Perform the *Diagnostic Repair Verification on page 6-123* after completing the repair.

Drive Motor Replacement on page 16-45 for A/Trans Wiring Harness Assembly, B228 Drive Motor Position Sensor, or M15 Drive Motor replacement.

DTC P0A5E, P0A61, or P0A64

Diagnostic Instructions

- Perform the *Diagnostic System Check - Vehicle on page 6-91* prior to using this diagnostic procedure.
- Review *Strategy Based Diagnosis on page 6-83* for an overview of the diagnostic approach.
- *Diagnostic Procedure Instructions on page 6-84* provides an overview of each diagnostic category.

DTC Descriptors

DTC P0A5E: Drive Motor Phase U Current Low

DTC P0A61: Drive Motor Phase V Current Low

DTC P0A64: Drive Motor Phase W Current Low

Circuit/System Description

This is an internal fault detection of the power inverter module, often referred to as the drive motor generator power inverter module. This fault is handled inside the drive motor generator power inverter module and no external circuits are involved.

The control modules listed below are part of the power inverter module and are not serviced separately:

- Hybrid/EV powertrain control module 1
- Drive motor control module
- Auxiliary transmission fluid pump control module

Conditions for Running the DTC

The control module runs the program to detect an internal fault when the Hybrid wake-up circuit is active.

Conditions for Setting the DTC

The control module has detected a malfunction.

Action Taken When the DTC Sets

- DTCs P0A5E, P0A61, and P0A64 are Type A DTCs.
- The power inverter module requests the hybrid/EV powertrain control module 2 to open the high voltage contactor relays.

Conditions for Clearing the DTC

DTCs P0A5E, P0A61, and P0A64 are Type A DTCs.

Reference Information

DTC Type Reference

Powertrain Diagnostic Trouble Code (DTC) Type Definitions

Circuit/System Verification

1. Vehicle ON.
2. Verify DTC P0A5E, P0A61, and P0A64 is not set.

⇒ **If any of the DTCs are set**

3. Verify the DTC does not set. If the DTC sets, replace the T6 Power Inverter Module.

⇓ **If the DTC does not set**

4. All OK.

Repair Instructions

Perform the *Diagnostic Repair Verification on page 6-123* after completing the repair.

Control Module References on page 6-3 for T6 Power Inverter Module, often referred to as the Drive Motor Generator Power Inverter Module, replacement, programming, and setup.

DTC P0A78

Diagnostic Instructions

- Perform the *Diagnostic System Check - Vehicle on page 6-91* prior to using this diagnostic procedure.
- Review *Strategy Based Diagnosis on page 6-83* for an overview of the diagnostic approach.
- *Diagnostic Procedure Instructions on page 6-84* provides an overview of each diagnostic category.

DTC Descriptors

DTC P0A78: Drive Motor Inverter Performance

Circuit/System Description

The power inverter module, often referred to as the drive motor generator power inverter module, contains the drive motor control module. The motor control module operates the drive motor based upon hybrid/EV powertrain control module 1 commands. The motor control module controls the speed, direction and output torque of the drive motor through the sequencing actuation of high current switching transistors called insulated gate bipolar transistors. Each insulated gate bipolar transistor assembly is monitored for fault conditions. The motor control module is part of the power inverter module and are not serviced separately.

Conditions for Running the DTC

- The high voltage contactor relays are closed.
- High voltage greater than 100 V.

Conditions for Setting the DTC

The motor control module detects excessive current flow through the switched portion of the insulated gate bipolar transistor.

Action Taken When the DTC Sets

- P0A78 is a Type A DTC.
- The hybrid/EV powertrain control module 1 requests hybrid/EV powertrain control module 2 to open the high voltage contactor relays.

Conditions for Clearing the DTC

P0A78 is a Type A DTC.

Reference Information

Schematic Reference

Hybrid/EV Controls Schematics on page 9-54

Connector End View Reference

Component Connector End Views on page 11-455

Electrical Information Reference

- *Circuit Testing on page 11-871*
- *Connector Repairs on page 11-895*
- *Testing for Intermittent Conditions and Poor Connections on page 11-877*
- *Wiring Repairs on page 11-883*

DTC Type Reference

Powertrain Diagnostic Trouble Code (DTC) Type Definitions on page 6-92

Circuit/System Verification

1. Vehicle ON.
2. Verify DTC P0A78 is not set.

⇒ **If the DTC is set**

2.1. Clear the DTC, vehicle OFF for 2 minutes to allow all control modules to shut down.

2.2. Operate the vehicle within the Conditions for Running the DTC. You may also operate the vehicle within the conditions that you observed from the Freeze Frame/Failure Records data.

2.3. Verify the DTC does not set.

⇒ If the DTC sets, continue to Circuit/System Testing.

⇓ If the DTC does not set.

2.4. All OK.

⇓ **If none of the DTCs are set**

3. All OK.

Circuit/System Testing

Note: Perform Circuit/System Verification before Circuit/System Testing.

Danger: Always perform the High Voltage Disabling procedure prior to servicing any High Voltage component or connection. Personal Protection Equipment (PPE) and proper procedures must be followed.

The High Voltage Disabling procedure will perform the following tasks:

- ***Identify how to disable high voltage.***
- ***Identify how to test for the presence of high voltage.***
- ***Identify condition under which high voltage is always present and personal protection equipment (PPE) and proper procedures must be followed.***

Failure to follow the procedures exactly as written may result in serious injury or death.

1. Perform the *High Voltage Disabling on page 9-363* procedure for servicing the T6 Power Inverter Module or T12 Transmission.
2. Remove the 3-phase cable assembly from the T6 Power Inverter Module. Refer to *Drive Motor Generator Power Inverter Module Replacement on page 9-184*.
3. Test for infinite resistance between each of the AC circuit terminals listed below and ground for each phase of the M15 Drive Motor:
   - X5 terminal 3 phase U
   - X5 terminal 2 phase V
   - X5 terminal 1 phase W

⇒ **If less than infinite resistance**

3.1. Disconnect the 3-phase cable assembly from the transmission. Refer to *Drive Motor Replacement on page 16-45*.

3.2. Test for infinite resistance between the AC circuit terminal and ground and between the AC circuit terminal and the aluminum cable mounting block.

⇒ If less than infinite resistance, replace the 3-phase cable assembly.

⇒ If infinite resistance, replace the M15 Drive Motor.

⇓ **If infinite resistance for all AC circuits**

4. Replace the T6 Power Inverter Module.
5. Operate the vehicle within the Conditions for Running the DTC. You may also operate the vehicle within the conditions that you observed from the Freeze Frame/Failure Records data.
6. Verify the DTC does not set.

⇒ **If the DTC sets**

Replace the M15 Drive Motor.

⇓ **If the DTC does not set**

7. All OK.

Repair Instructions

Perform the *Diagnostic Repair Verification on page 6-123* after completing the repair.

- *Drive Motor Replacement on page 16-45* for Drive Motor 1 3–Phase Cable Assembly replacement or M15 Drive Motor replacement.
- *Control Module References on page 6-3* for T6 Power Inverter Module, often referred to as the Drive Motor Generator Power Inverter Module, replacement, programming, and setup.

DTC P0A8D

Diagnostic Instructions

- Perform the *Diagnostic System Check - Vehicle on page 6-91* prior to using this diagnostic procedure.
- Review *Strategy Based Diagnosis on page 6-83* for an overview of the diagnostic approach.
- *Diagnostic Procedure Instructions on page 6-84* provides an overview of each diagnostic category.

DTC Descriptors

DTC P0A8D: 14V Power Module System Voltage Low Voltage

Circuit/System Description

The 14V power module, often referred to as the accessory DC power control module, converts the high voltage (360V) direct current (DC) to low voltage (14V) DC to charge the 12V battery and to operate the power accessories. The ECM controls the 14V power module by supplying a 5V pulse width modulated (PWM) signal through a control circuit. The ECM monitors 12V battery voltage to ensure the 14V power module is maintaining the desired voltage.

Conditions for Running the DTC

14V power module is commanded ON.

Conditions for Setting the DTC

The ECM monitored battery voltage is less than or equal to 11V for 8 s within a 10 s window.

Action Taken When the DTC Sets

- The charge indicator is illuminated.
- The 14V power module stops supplying power to the 12V system.
- DTC P0A8D is a Type C DTC.

Conditions for Clearing the DTC

DTC P0A8D is a Type C DTC.

Diagnostic Aids

An improperly fastened 200-amp in-line mega-fuse may cause this DTC to set.

Reference Information

DTC Type Reference

Powertrain Diagnostic Trouble Code (DTC) Type Definitions on page 6-92

Circuit/System Testing

1. Verify DTC P1F59, P1F5A, P1F5B, P1F5D, or P1F5E is not set.

⇒ **If the DTC is set**

Refer to *Diagnostic Trouble Code (DTC) List - Vehicle on page 6-92*.

⇓ **If the DTC is not set**

2. Perform the *DC Power Conversion Test on page 9-169*.

DTC P0AC4

Diagnostic Instructions

- Perform the *Diagnostic System Check - Vehicle on page 6-91* prior to using this diagnostic procedure.
- Review *Strategy Based Diagnosis on page 6-83* for an overview of the diagnostic approach.
- *Diagnostic Procedure Instructions on page 6-84* provides an overview of each diagnostic category.

DTC Descriptor

DTC P0AC4: Hybrid/EV Powertrain Control Module 1 Requested MIL Illumination

Circuit/System Description

This DTC indicates the hybrid/EV powertrain control module 1 has set a DTC. The hybrid/EV powertrain control module 1 sends a message via the serial data circuit to the ECM requesting illumination of the MIL. When the ECM receives the message, DTC P0AC4 will set. The DTC information for the ECM will only display DTC P0AC4, but the freeze frame/failure records data will display the hybrid/EV powertrain control module 1 DTC that is set.

Conditions for Running the DTC

- Vehicle ON for greater than 3 s.
- This DTC runs continuously when the above condition is met.

Conditions for Setting the DTC

The hybrid/EV powertrain control module 1 has set a DTC.

Action Taken When the DTC Sets

DTC P0AC4 is a Type A DTC.

Conditions for Clearing the DTC

DTC P0AC4 is a Type A DTC.

Reference Information

Description and Operation

Hybrid/EV Modes of Operation Description

DTC Type Reference

Powertrain Diagnostic Trouble Code (DTC) Type Definitions on page 6-92

Scan Tool Reference

Control Module References on page 6-3 for scan tool information.

Circuit/System Verification

Note: DTC P0AC4 is an informational DTC indicating a DTC is set in the hybrid/EV powertrain control module 1; do not replace the ECM for this DTC.

1. Vehicle ON.
2. Verify DTC P0AC4 is not set.

⇒ **If the DTC is set**

Refer to *Diagnostic Trouble Code (DTC) List - Vehicle on page 6-92* for diagnosis of hybrid/EV powertrain control module 1 DTCs.

⇓ **If the DTC is not set**

3. All OK.

Repair Instructions

Perform the *Diagnostic Repair Verification on page 6-123* after completing the repair.

DTC P0AEE, P0AEF, P0AF0, P0BD2-P0BD4, or P0BDC-P0BDE

Diagnostic Instructions

- Perform the *Diagnostic System Check - Vehicle on page 6-91* prior to using this diagnostic procedure.
- Review *Strategy Based Diagnosis on page 6-83* for an overview of the diagnostic approach.
- *Diagnostic Procedure Instructions on page 6-84* provides an overview of each diagnostic category.

DTC Descriptor

DTC P0AEE: Drive Motor Inverter Temperature Sensor 1 Performance
DTC P0AEF: Drive Motor Inverter Temperature Sensor 1 Circuit Low Voltage
DTC P0AF0: Drive Motor Inverter Temperature Sensor 1 Circuit High Voltage
DTC P0BD2: Drive Motor Inverter Temperature Sensor 3 Performance
DTC P0BD3: Drive Motor Inverter Temperature Sensor 3 Circuit Low Voltage
DTC P0BD4: Drive Motor Inverter Temperature Sensor 3 Circuit High Voltage
DTC P0BDC: Drive Motor Inverter Temperature Sensor 5 Performance
DTC P0BDD: Drive Motor Inverter Temperature Sensor 5 Circuit Low Voltage
DTC P0BDE: Drive Motor Inverter Temperature Sensor 5 Circuit High Voltage

Circuit/System Description

This is an internal fault detection of the power inverter module, often called the drive motor generator power inverter module. This fault is handled inside the drive motor generator power inverter module and no external circuits are involved.

The control modules listed below are part of the power inverter module and are not serviced separately:

- Hybrid/EV powertrain control module 1
- Drive motor control module
- Auxiliary transmission fluid pump control module

Conditions for Running the DTC

P0AEE, P0BD2, and P0BDC

- P0AEF, P0AF0, P0BD3, P0BD4, P0BDD, and P0BDE are not set.
- 6 hours have elapsed since the vehicle has been ON.
- Ignition ON and more than 2 hours have elapsed since battery pack conditioning or charging has taken place.
- Transmission fluid and hybrid/EV powertrain control module 1 temperature sensor average is greater than 20°C (68°F).

P0AEF, P0BD3, and P0BDD

The ignition is ON.

P0AF0, P0BD4, and P0BDE

- The ignition is ON.
- Ignition ON, the drive motor must operate at greater than 20 N•m (14.75 lb ft) for a cumulative time of 1.5 minutes before the DTC will run.

Conditions for Setting the DTC

P0AEE, P0BD2, and P0BDC

- A 20°C (68°F) difference is observed between the individual inverter phase temperature sensor and the average of all the inverter phase temperatures.
- The above condition is present for 100 ms.

P0AEF, P0BD3, and P0BDD

The inverter phase temperature sensor is greater than 130°C (266°F) for 3 seconds.

P0AF0, P0BD4, and P0BDE

The inverter phase temperature sensor is less than −58°C (−72.4°F) for 3 seconds.

Action Taken When the DTC Sets

- P0AEF, P0AF0, P0BD3, P0BD4, P0BDD, and P0BDE are Type A DTCs.
- P0AEE, P0BD2, and P0BDC are Type B DTCs.
- If all three sensors set faults, power to the motor will be limited.

Conditions for Clearing the DTC

- P0AEF, P0AF0, P0BD3, P0BD4, P0BDD, and P0BDE are Type A DTCs.
- P0AEE, P0BD2, and P0BDC are Type B DTCs.

Reference Information

DTC Type Reference

Powertrain Diagnostic Trouble Code (DTC) Type Definitions on page 6-92

Circuit/System Verification

1. Vehicle ON.
2. Verify DTC P0AEE, P0AEF, P0AF0, P0BD2, P0BD3, P0BD4, P0BDC, P0BDD, or P0BDE is not set.

⇒ **If any of the DTCs are set**

2.1. Verify the DTC does not set.

⇒ If the DTC sets, replace the T6 Power Inverter Module.

⇓ If the DTC does not set

2.2. All OK.

⇓ **If none of the DTCs are set**

3. All OK.

Repair Instructions

Perform the *Diagnostic Repair Verification on page 6-123* after completing the repair.

Control Module References on page 6-3 for T6 Drive Motor Generator Power Inverter Module replacement, programming and setup.

DTC P0B01, P0B04, or P0B07

Diagnostic Instructions

- Perform the *Diagnostic System Check - Vehicle on page 6-91* prior to using this diagnostic procedure.
- Review *Strategy Based Diagnosis on page 6-83* for an overview of the diagnostic approach.
- *Diagnostic Procedure Instructions on page 6-84* provides an overview of each diagnostic category.

DTC Descriptor

DTC P0B01: Auxiliary Transmission Fluid Pump Motor Phase U Current Low
DTC P0B04: Auxiliary Transmission Fluid Pump Motor Phase V Current Low
DTC P0B07: Auxiliary Transmission Fluid Pump Motor Phase W Current Low

Circuit/System Description

This is an internal fault detection of the power inverter module, often referred to as the drive motor generator power inverter module. This fault is handled inside the drive motor generator power inverter module and no external circuits are involved.

Conditions for Running the DTC

The control module runs the program to detect an internal fault when the Hybrid wake-up circuit is active.

Conditions for Setting the DTC

The control module has detected an internal malfunction.

Action Taken When the DTC Sets

- DTCs P0B01, P0B04, and P0B07 are Type A DTCs.
- Vehicle speed will be limited, the Propulsion Power is Reduced message will be illuminated.

Conditions for Clearing the DTC

DTCs P0B01, P0B04, and P0B07 are Type A DTCs.

Diagnostic Aids

One or all of these DTCs will set if the vehicle is driven while the Auxiliary Transmission Fluid Pump is disconnected.

Reference Information

DTC Type Reference

Powertrain Diagnostic Trouble Code (DTC) Type Definitions on page 6-92

Circuit/System Verification

1. Vehicle ON.
2. Verify DTC P0B01, P0B04, and P0B07 is not set.

⇒ **If any of the DTCs are set**

2.1. Clear the DTC, vehicle OFF for 2 minutes to allow all control modules to shut down.
2.2. Operate the vehicle within the Conditions for Running the DTC. You may also operate the vehicle within the conditions that you observed from the Freeze Frame/Failure Records data.
2.3. Verify the DTC does not set.

⇒ If the DTC sets, continue to Circuit/System Testing.

⇓ If the DTC is not set

2.4. All OK.

Circuit/System Testing

Note: Perform Circuit/System Verification before Circuit/System Testing.

Danger: Always perform the High Voltage Disabling procedure prior to servicing any High Voltage component or connection. Personal Protection Equipment (PPE) and proper procedures must be followed.

The High Voltage Disabling procedure will perform the following tasks:

- ***Identify how to disable high voltage.***
- ***Identify how to test for the presence of high voltage.***
- ***Identify condition under which high voltage is always present and personal protection equipment (PPE) and proper procedures must be followed.***

Failure to follow the procedures exactly as written may result in serious injury or death.

1. Perform the *High Voltage Disabling on page 9-363* procedure for servicing the T6 Power Inverter Module cable connections.
2. Remove the Auxiliary Transmission Fluid Pump connector X8 from the T6 Power Inverter Module.

3. Test for less than 1.0 Ω between each phase of the Auxiliary Transmission Fluid Pump and harness by measuring between the following AC circuit terminals.
   - X8 terminal 1 phase U and terminal 2 phase V
   - X8 terminal 2 phase V terminal 3 phase W
   - X8 terminal 3 phase W and terminal 1 phase U

⇒ **If less than 1.0 Ω, replace the T6 Power Inverter Module**

⇓ **If 1.0 Ω or greater**

3.1. Remove the Auxiliary Transmission Fluid Pump connector from the T12 Automatic Transmission Assembly.

3.2. Test for less than 1.0 Ω between each phase of the Auxiliary Transmission Fluid Pump by measuring between the following AC circuit terminals.
   - X8 terminal 1 phase U and phase V
   - X8 terminal 2 phase V and phase W
   - X8 terminal 3 phase W and phase U

⇒ **If 1.0 Ω or greater replace the G5 Auxiliary Transmission Fluid Pump**

⇓ **If less than 1.0 Ω**

4. Replace the 3-phase cable assembly.

Repair Instructions

Perform the *Diagnostic Repair Verification on page 6-123* after completing the repair.

- *Transmission Fluid Pump Replacement on page 16-39* for G5 Auxiliary Transmission Fluid Pump replacement
- *Control Module References on page 6-3* for T6 Power Inverter Module, often referred to as the Drive Motor Generator Power Inverter Module, replacement, programming, and setup

DTC P0B0D

Diagnostic Instructions

- Perform the *Diagnostic System Check - Vehicle on page 6-91* prior to using this diagnostic procedure.
- Review *Strategy Based Diagnosis on page 6-83* for an overview of the diagnostic approach.
- *Diagnostic Procedure Instructions on page 6-84* provides an overview of each diagnostic category.

DTC Descriptor

DTC P0B0D: Auxiliary Transmission Fluid Pump Control Module Performance

Circuit/System Description

This is an internal fault detection of the power inverter module, often referred to as the drive motor generator power inverter module. This fault is handled inside the drive motor generator power inverter module and no external circuits are involved. The motor control module is part of the drive motor generator power inverter module, and is not serviced separately.

Conditions for Running the DTC

- The vehicle is in accessory or OFF.
- The system voltage is greater than 9.5 V.
- Vehicle speed less than 5.0 kph.
- DTCs P0601, P0604, P0606 are not set.

Conditions for Setting the DTC

The control module has detected an internal malfunction.

Action Taken When the DTC Sets

- P0B0D is a Type A DTC.
- The power inverter module requests the hybrid powertrain control module 2 to open the high voltage contactor relays.

Conditions for Clearing the DTC

P0B0D is a Type A DTC.

Reference Information

DTC Type Reference

Powertrain Diagnostic Trouble Code (DTC) Type Definitions

Circuit/System Verification

1. Vehicle ON.
2. Verify DTC P0B0D is not set.

⇒ **If the DTC is set**

Replace the T6 Power Inverter Module.

⇓ **If the DTC does not set**

3. All OK.

Repair Instructions

Perform the *Diagnostic Repair Verification on page 6-123* after completing the repair.

Control Module References on page 6-3 for T6 Power Inverter Module, often referred to as the Drive Motor Generator Power Inverter Module, replacement, programming, and setup.

DTC P0BE6-P0BE8, P0BEA-P0BEC, P0BEE, P0BEF, or P0BF0

Diagnostic Instructions

- Perform the *Diagnostic System Check - Vehicle on page 6-91* prior to using this diagnostic procedure.
- Review *Strategy Based Diagnosis on page 6-83* for an overview of the diagnostic approach.
- *Diagnostic Procedure Instructions on page 6-84* provides an overview of each diagnostic category.

DTC Descriptors

DTC P0BE6: Drive Motor Phase U Current Sensor Performance
DTC P0BE7: Drive Motor Phase U Current Sensor Circuit Low Voltage
DTC P0BE8: Drive Motor Phase U Current Sensor Circuit High Voltage
DTC P0BEA: Drive Motor Phase V Current Sensor Performance
DTC P0BEB: Drive Motor Phase V Current Sensor Circuit Low Voltage
DTC P0BEC: Drive Motor Phase V Current Sensor Circuit High Voltage
DTC P0BEE: Drive Motor Phase W Current Sensor Performance
DTC P0BEF: Drive Motor Phase W Current Sensor Circuit Low Voltage
DTC P0BF0: Drive Motor Phase W Current Sensor Circuit High Voltage

Circuit/System Description

This is an internal fault detection of the power inverter module, often referred to as the drive motor generator power inverter module. This fault is handled inside the drive motor generator power inverter module and no external circuits are involved.

Conditions for Running the DTC

The control module runs the program to detect an internal fault when the Hybrid wake-up circuit is active.

Conditions for Setting the DTC

The control module has detected an internal malfunction.

Action Taken When the DTC Sets

- DTCs P0BE6, P0BE7, P0BE8, P0BEA, P0BEB, P0BEC, P0BEE, P0BEF, and P0BF0 are Type A DTCs.
- The hybrid/EV powertrain control module 1 requests the hybrid/EV powertrain control module 2 to open the high voltage contactor relays.

Conditions for Clearing the DTC

DTCs P0BE6, P0BE7, P0BE8, P0BEA, P0BEB, P0BEC, P0BEE, P0BEF, and P0BF0 are Type A DTCs.

Reference Information

DTC Type Reference

Powertrain Diagnostic Trouble Code (DTC) Type Definitions on page 6-92

Circuit/System Verification

1. Vehicle ON.
2. Verify DTC P0BE6, P0BE7, P0BE8, P0BEA, P0BEB, P0BEC, P0BEE, P0BEF, or P0BF0 is not set.

⇒ **If any of the DTCs are set**

3. Verify the DTC does not set. If the DTC sets, replace the T6 Power Inverter Module.

⇓ **If the DTC does not set**

4. All OK.

Repair Instructions

Perform the *Diagnostic Repair Verification on page 6-123* after completing the repair.

Control Module References on page 6-3 for T6 Power Inverter Module, often referred to as the Drive Motor Generator Power Inverter Module, replacement, programming, and setup.

DTC P0BFD

Diagnostic Instructions

- Perform the *Diagnostic System Check - Vehicle on page 6-91* prior to using this diagnostic procedure.
- Review *Strategy Based Diagnosis on page 6-83* for an overview of the diagnostic approach.
- *Diagnostic Procedure Instructions on page 6-84* provides an overview of each diagnostic category.

DTC Descriptors

DTC P0BFD: Drive Motor Phases U-V-W Not Plausible

Circuit/System Description

The power inverter module, often referred to as the drive motor generator power inverter module, contains the motor control module and the hybrid/EV powertrain control module 1. The motor control module operates the drive motor based upon hybrid/EV powertrain control module 1 commands. The motor control module controls the speed, direction and output torque of the drive motor through the sequencing actuation of high current switching transistors called insulated gate bipolar transistors. Each drive motor operates utilizing 3-phase alternating current (AC) electricity. Each insulated gate bipolar transistors operates a single phase of the drive motor. Each phase is individually identified as U, V and W. The motor control module monitors the current of each phase in order to detect power inverter module over current conditions.

Because all the motor generator phase circuits are electrically joined together, they should each flow about the same amount of current. The motor control modules perform a mathematical calculation to verify that the phase current sensors are accurate. If the U-V-W phase current sensors indicate about the same amount of phase current, the sum of the calculation should be near zero. If the U-V-W phase currents are not similar, this DTC will set.

Conditions for Running the DTC

- The vehicle is ON.
- The high voltage contactor relays are closed.

Conditions for Setting the DTC

The sum of the 3 phase current sensors is greater than 156 A.

Action Taken When the DTC Sets

- P0BFD is a Type A DTC.
- The hybrid/EV powertrain control module 1 requests the hybrid/EV powertrain control module 2 to open the high voltage contactor relays.

Conditions for Clearing the DTC

P0BFD is a Type A DTC.

Reference Information

Schematic Reference

Hybrid/EV Controls Schematics on page 9-54

Electrical Information Reference

- *Circuit Testing on page 11-871*
- *Connector Repairs on page 11-895*
- *Testing for Intermittent Conditions and Poor Connections on page 11-877*
- *Wiring Repairs on page 11-883*

DTC Type Reference

Powertrain Diagnostic Trouble Code (DTC) Type Definitions on page 6-92

Circuit/System Verification

1. Vehicle ON.
2. Verify DTC P0BFD is not set.

⇒ **If any of the DTCs are set**

2.1. Clear the DTC, vehicle OFF for 2 minutes to allow all control modules to shut down.

2.2. Operate the vehicle within the Conditions for Running the DTC. You may also operate the vehicle within the conditions that you observed from the Freeze Frame/Failure Records data.

2.3. Verify the DTC does not set.

⇒ If the DTC sets, continue to Circuit/System Testing.

⇓ If the DTC does not set.

2.4. All OK.

⇓ **If none of the DTCs are set**

3. All OK.

Circuit/System Testing

Note: Perform Circuit/System Verification before Circuit/System Testing.

Danger: Always perform the High Voltage Disabling procedure prior to servicing any High Voltage component or connection. Personal Protection Equipment (PPE) and proper procedures must be followed.

The High Voltage Disabling procedure will perform the following tasks:

- ***Identify how to disable high voltage.***
- ***Identify how to test for the presence of high voltage.***

- ***Identify condition under which high voltage is always present and personal protection equipment (PPE) and proper procedures must be followed.***

Failure to follow the procedures exactly as written may result in serious injury or death.

1. Perform the *High Voltage Disabling on page 9-363* procedure for servicing the T6 Power Inverter Module cable connections.
2. Remove the 3-phase cable assembly from the T6 Power Inverter Module. Refer to *Drive Motor Generator Power Inverter Module Replacement on page 9-184*.
3. Test for infinite resistance between each of the AC circuit terminals listed below and ground for each phase of the M15 Drive Motor:
   - X5 terminal 3 phase U
   - X5 terminal 2 phase V
   - X5 terminal 1 phase W

⇒ **If less than infinite resistance**

3.1. Disconnect the 3-phase cable assembly from the transmission. Refer to *Drive Motor Replacement on page 16-45*.

3.2. Test for infinite resistance between the AC circuit terminal and ground and between the AC circuit terminal and the aluminum cable mounting block.

⇒ If less than infinite resistance, replace the 3-phase cable assembly.

⇒ If infinite resistance, replace the M15 Drive Motor.

⇓ **If infinite resistance for all AC circuits**

4. Replace the T6 Power Inverter Module.
5. Operate the vehicle within the Conditions for Running the DTC. You may also operate the vehicle within the conditions that you observed from the Freeze Frame/Failure Records data.
6. Verify the DTC does not set.

⇒ **If the DTC sets**

Replace the M15 Drive Motor.

⇓ **If the DTC does not set**

7. All OK.

Repair Instructions

Perform the *Diagnostic Repair Verification on page 6-123* after completing the repair.

- *Drive Motor Replacement on page 16-45* for Drive Motor or Drive Motor 3–Phase Cable Assembly replacement
- *Control Module References on page 6-3* for T6 Power Inverter Module, often referred to as the Drive Motor Generator Power Inverter Module, replacement, programming, and setup.

DTC P0C01

Diagnostic Instructions

- Perform the *Diagnostic System Check - Vehicle on page 6-91* prior to using this diagnostic procedure.
- Review *Strategy Based Diagnosis on page 6-83* for an overview of the diagnostic approach.
- *Diagnostic Procedure Instructions on page 6-84* provides an overview of each diagnostic category.

DTC Descriptors

DTC P0C01: Drive Motor High Current

Circuit/System Description

The power inverter module, often referred to as the drive motor generator power inverter module, contains the motor control module and the hybrid/EV powertrain control module 1. The motor control module operates the drive motor based upon hybrid/EV powertrain control module 1 commands. The motor control module controls the speed, direction and output torque of the drive motor through the sequencing actuation of high current switching transistors called insulated gate bipolar transistors. The drive motor operates utilizing 3-phase AC electricity. Each insulated gate bipolar transistor operates a single phase of the drive motor. Each phase is individually identified as U, V and W. The motor control module monitors the current of each phase in order to detect power inverter module overcurrent conditions. The motor control module is part of the power inverter module, and are not serviced separately.

Conditions for Running the DTC

The hybrid wakeup circuit is active.

Conditions for Setting the DTC

One or more phase currents are greater than 725 A.

Action Taken When the DTC Sets

DTC P0C01 is a Type A DTC.

Conditions for Clearing the DTC

DTC P0C01 is a Type A DTC.

Reference Information

Schematic Reference

Hybrid/EV Controls Schematics on page 9-54

Electrical Information Reference

- *Circuit Testing on page 11-871*
- *Connector Repairs on page 11-895*
- *Testing for Intermittent Conditions and Poor Connections on page 11-877*
- *Wiring Repairs on page 11-883*

DTC Type Reference

Powertrain Diagnostic Trouble Code (DTC) Type Definitions on page 6-92

Circuit/System Verification

1. Vehicle ON.
2. Verify DTC P0A78 is not set.

⇒ **If any of the DTCs are set**

2.1. Clear the DTC, vehicle OFF for 2 minutes to allow all control modules to shut down.

2.2. Operate the vehicle within the Conditions for Running the DTC. You may also operate the vehicle within the conditions that you observed from the Freeze Frame/Failure Records data.

2.3. Verify the DTC does not set.

⇒ If the DTC sets, continue to Circuit/System Testing.

⇓ If the DTC does not set.

2.4. All OK.

⇓ **If none of the DTCs are set**

3. All OK.

Circuit/System Testing

Note: Perform Circuit/System Verification before Circuit/System Testing.

Danger: Always perform the High Voltage Disabling procedure prior to servicing any High Voltage component or connection. Personal Protection Equipment (PPE) and proper procedures must be followed.

The High Voltage Disabling procedure will perform the following tasks:

- ***Identify how to disable high voltage.***
- ***Identify how to test for the presence of high voltage.***
- ***Identify condition under which high voltage is always present and personal protection equipment (PPE) and proper procedures must be followed.***

Failure to follow the procedures exactly as written may result in serious injury or death.

1. Perform the *High Voltage Disabling on page 9-363* procedure for servicing the T6 Power Inverter Module or T12 Transmission.
2. Remove the 3-phase cable assembly from the T6 Power Inverter Module. Refer to *Drive Motor Generator Power Inverter Module Replacement on page 9-184*.

3. Test for infinite resistance between each of the AC circuit terminals listed below and ground for each phase of the M15 Drive Motor:
   - X5 terminal 3 phase U
   - X5 terminal 2 phase V
   - X5 terminal 1 phase W

⇒ **If less than infinite resistance**

3.1. Disconnect the 3-phase cable assembly from the transmission. Refer to *Drive Motor Replacement on page 16-45*.

3.2. Test for infinite resistance between the AC circuit terminal and ground and between the AC circuit terminal and the aluminum cable mounting block.

⇒ If less than infinite resistance, replace the 3-phase cable assembly.

⇒ If infinite resistance, replace the M15 Drive Motor.

⇓ **If infinite resistance for all AC circuits**

4. Replace the T6 Power Inverter Module.
5. Operate the vehicle within the Conditions for Running the DTC. You may also operate the vehicle within the conditions that you observed from the Freeze Frame/Failure Records data.
6. Verify the DTC does not set.

⇒ **If the DTC sets**

Replace the M15 Drive Motor.

⇓ **If the DTC does not set**

7. All OK.

Repair Instructions

Perform the *Diagnostic Repair Verification on page 6-123* after completing the repair.

- *Drive Motor Replacement on page 16-45* for Drive Motor or Drive Motor 3-Phase Cable Assembly replacement
- *Control Module References on page 6-3* for T6 Power Inverter Module, often referred to as the Drive Motor Generator Power Inverter Module, replacement, programming, and setup

DTC P0C0B

Diagnostic Instructions

- Perform the *Diagnostic System Check - Vehicle on page 6-91* prior to using this diagnostic procedure.
- Review *Strategy Based Diagnosis on page 6-83* for an overview of the diagnostic approach.
- *Diagnostic Procedure Instructions on page 6-84* provides an overview of each diagnostic category.

DTC Descriptor

DTC P0C0B: Drive Motor Inverter Supply Voltage Circuit

Circuit/System Description

This is an internal fault detection of the power inverter module, often referred to as the drive motor generator power inverter module. This fault is handled inside the power inverter module, and no external circuits are involved. The control modules listed below are part of the power inverter module and are not serviced separately:

- Hybrid/EV powertrain control module 1
- Drive motor control module
- Auxiliary transmission fluid pump control module

Conditions for Running the DTC

- Vehicle is ON or Charge Mode is active.
- High voltage is greater than 100 V.

Conditions for Setting the DTC

The control module does not detect voltage at the insulated gate bi-polar transistor bias supply.

Action Taken When the DTC Sets

- P0C0B is a Type A DTC.
- The high voltage contactors will be commanded open.

Conditions for Clearing the DTC

P0C0B is a Type A DTC.

Reference Information

DTC Type Reference

Powertrain Diagnostic Trouble Code (DTC) Type Definitions on page 6-92

Circuit/System Verification

1. Vehicle ON.
2. Verify DTC P0C0B is not set.

⇒ **If any of the DTCs are set**

2.1. Verify the DTC does not set.

⇒ If the DTC sets, replace the T6 Power Inverter Module.

⇓ If the DTC does not set.

2.2. All OK.

⇓ **If none of the DTCs are set**

3. All OK.

Repair Instructions

Perform the *Diagnostic Repair Verification on page 6-123* after completing the repair.

Control Module References on page 6-3 for T6 Power Inverter Module, often referred to as the Drive Motor Generator Power Inverter Module, replacement, programming, and setup.

DTC P0C11-P0C13

Diagnostic Instructions

- Perform the *Diagnostic System Check - Vehicle on page 6-91* prior to using this diagnostic procedure.
- Review *Strategy Based Diagnosis on page 6-83* for an overview of the diagnostic approach.
- *Diagnostic Procedure Instructions on page 6-84* provides an overview of each diagnostic category.

DTC Descriptor

DTC P0C11: Drive Motor Inverter Phase U High Temperature
DTC P0C12: Drive Motor Inverter Phase V High Temperature
DTC P0C13: Drive Motor Inverter Phase W High Temperature

Circuit/System Description

The power inverter module, often referred to as the drive motor generator power inverter module, contains the drive motor control module and the hybrid/EV powertrain control module 1. The motor control module operates the drive motor based upon hybrid/EV powertrain control module 1 commands. The motor control module controls the speed, direction and output torque of the drive motor through the sequencing actuation of high current switching transistors called insulated gate bipolar transistors. The drive motor operates utilizing 3 phase AC. Each insulated gate bipolar transistor operates a single phase of the drive motor. Each phase is individually identified as U, V and W. The motor control module monitors the temperature of each phase in order to detect power inverter module over-temperature conditions.

Conditions for Running the DTC

- DTC P0AEE, P0AEF, P0AF0, P0BD2-P0BD4, or P0BDC-P0BDE is not set.
- Vehicle ON.

Conditions for Setting the DTC

The phase temperature has exceeded 106°C (223°F) for 5 seconds.

Action Taken When the DTC Sets

- DTCs P0C11, P0C12, and P0C13 are Type A DTCs.
- As the temperature increases, power to the motor will be limited. Propulsion will be disabled if the temperature rises above 112°C (234°F).

Conditions for Clearing the DTC

DTCs P0C11, P0C12, and P0C13 are Type A DTCs.

Reference Information

Description and Operation

Drive Motor Generator Power Inverter Module Description and Operation on page 9-193

DTC Type Reference

Powertrain Diagnostic Trouble Code (DTC) Type Definitions on page 6-92

Circuit/System Verification

1. Verify DTC P0480, P0C47, P0C4A, P1E8C, P1E8D, DTC P0CE5-P0CE7, P1F58, P0CE9, P0CEA, P1F44, P1F45, or P1EC6 is not set.

⇒ **If any of the DTCs are set**

Refer to *Diagnostic Trouble Code (DTC) List - Vehicle on page 6-92*.

⇓ **If none of the DTCs are set**

2. Inspect for proper coolant level in the hybrid cooling system reservoir.

⇒ **If coolant level is low**

Refer to *Hybrid Cooling System Loss of Coolant (Drive Motor Battery Cooling System) on page 9-253* or *Hybrid Cooling System Loss of Coolant (Drive Motor Generator Power Inverter Module Cooling System) on page 9-254*.

⇓ **If coolant level is OK**

3. Inspect the hybrid/EV cooling system radiator for debris or obstruction.

⇒ **If a concern is found**

Repair or replace the restricted or damaged components as necessary.

⇓ **If no concern is found**

4. Inspect for proper operation of all hybrid/EV system coolant pumps. Refer *Hybrid/EV Electronics Cooling Diagnostic on page 9-241*.

⇒ **If a concern is found**

Repair or replace the coolant pumps as necessary.

⇓ **If no concern is found**

5. Command the cooling fans through all operating speeds.

⇒ **If the cooling fans do not operate in all speeds**

Refer to *Hybrid/EV Electronics Cooling Diagnostic on page 9-241*.

⇓ **If the cooling fans operate in all speeds**

6. All OK.

Repair Instructions

Perform the *Diagnostic Repair Verification on page 6-123* after completing the repair.

Control Module References on page 6-3 for T6 Power Inverter Module, often referred to as the Drive Motor Generator Power Inverter Module, replacement, programming, and setup

DTC P0C17 or P1B0F

Diagnostic Instructions

- Perform the *Diagnostic System Check - Vehicle on page 6-91* prior to using this diagnostic procedure.
- Review *Strategy Based Diagnosis on page 6-83* for an overview of the diagnostic approach.
- *Diagnostic Procedure Instructions on page 6-84* provides an overview of each diagnostic category.

DTC Descriptors

DTC P0C17: Drive Motor 1 Position Not Learned

DTC P1B0F: Drive Motor 1 Position Learn Incorrect

Circuit/System Description

The drive motor position sensor is monitored by the drive motor control module. The motor control module monitors the angular position, speed and direction of the drive motor rotor based upon the signals of the resolver-type position sensor. The position sensor contains a drive coil, two driven coils and an irregular shaped metallic rotor. The metallic rotor is mechanically attached to the shaft of the drive motor generator. At vehicle ON, the motor control module outputs a 7 V AC, 10 kHz excitation signal to the drive coil. The drive coil excitation signal creates a magnetic field surrounding the two driven coils and the irregular shaped rotor. The motor control module then monitors the two driven coil circuits for a return signal. The position of the irregular metallic rotor causes the magnetically-induced return signals of the driven coils to vary in size and shape. A comparison of the two driven coils signals allows the motor control module to determine the exact position, speed and direction of the drive motor rotor.

A measurement called offset is needed for accurate determination of the motor position. Offset is the relationship between the position sensor and the drive motor generator output shaft. Whenever the vehicle is cycled to OFF, the motor control module attempts to learn the offset of the drive motor position sensor by rapidly oscillating the motor and observing the position sensor signals.

The motor control module will attempt to learn the position at hybrid wake-up, vehicle ON only if no valid offset value has ever been learned. The non-learned condition would normally occur only after a motor control module reprogramming event.

Conditions for Running the DTC

P0C17

- Vehicle is cycled from OFF to ON.
- The motor control module has no valid drive motor position sensor offset value in memory.

P1B0F

- Vehicle is cycled from ON to OFF.
- The motor control module has learned a valid drive motor position sensor offset value at least once.

Conditions for Setting the DTC

Condition 1

Position sensor offset value not learned because drive motor speed is greater than 50 RPM.

Condition 2

Position sensor offset value not learned because hybrid battery voltage as observed at the motor control module is less than 192 V.

Condition 3

Position sensor offset value not learned because drive motor phase to phase current difference is less than 15 A.

Action Taken When the DTC Sets

P0C17

- DTC P0C17 is a Type A DTC.
- Propulsion is disabled. The vehicle cannot operate without a previously stored offset value or the ability to learn offset.

P1B0F

- DTC P1B0F is a Type B DTC.
- The motor control module operates the drive motor generator using the last valid learned offset.

Conditions for Clearing the DTC

- DTC P0C17 is a Type A DTC.
- DTC P1B0F is a Type B DTC.

Diagnostic Aids

- If the vehicle is powered off while driving DTC P1B0F may set.
- The drive motor position sensor circuits operate at very low current. These circuits are susceptible to moisture intrusion, corrosion, and terminal damage. Extreme care must be taken when probing terminals and manipulating harnesses. Poor terminal connections can result in intermittent operation.
- If the customer comments that the problem occurs only during moist environmental conditions: rain, snow, vehicle wash, etc., inspect the sensor wiring for signs of water intrusion.

- The sensor circuit loops are a twisted pair with each pair covered in a foil shield. The shield circuits outside of the transmission are grounded to a stud on the power inverter module, often referred to as the drive motor generator power inverter module.
- The drive motor position sensor harness circuits are shielded. Improperly grounded shield circuits may cause inaccurate sensor signals.
- Intermittent appearance of DTC P0A3F, P0A40, P0C52, P0C53, P0C5C, P0C5D, or P1B03 suggests intermittent position sensor circuit or connector problems.
- The drive motor control module 1 monitors and report the Drive Motor Position Sensor Offset Learn Status. This information can be observed using a scan tool. Status is updated during the transition from vehicle ON to vehicle OFF during normal conditions. Alternating, and possibly intermittent, appearance of "Not Run," "Learn Failed Motor Speed Not Zero," and "Motor Current Incorrect" suggests intermittent position sensor circuit or connector problems.
- Intermittent appearance of "Motor Current Incorrect" suggests loose 3-phase cable assembly connections at the power inverter module or drive motor.

Drive Motor Position Sensor Offset Learn Status Descriptions

Drive Motor Position Sensor Offset Learn Status	Description	May Be Caused By
Not Run	Not run yet, waiting for key off	NA
	Aborted run due to detecting high voltage too low or motor speed too high	Key off while rolling, drive motor position sensor circuit problems, or high voltage system problems
	Ran but failed due to out of range values	Resolver or drive motor problems
Learn Successful	Position offset learned and stored successfully	NA
Learn Failed Motor Speed Not Zero	Speed high during offset learn but not before	Drive motor position sensor circuit problems
Learn Failed – High Voltage Too Low	High voltage contactors opened during offset learn	High voltage system problems
Motor Current Incorrect	Low current on 3-phase circuits between power inverter module and drive motor	Drive motor, power inverter module, or 3-phase cable assembly problem

Reference Information

Scan Tool Reference

Control Module References on page 6-3 for scan tool information

Circuit/System Verification

1. Vehicle ON.
2. Verify that DTCs P0A3F, P0A40, P0A78, P0C01, P0C05, P0C0B, P0C4E, P0C52, P0C53, P0C5C, P0C5D, P1B03, or P1B0D is not set.

⇒ **If any of the DTCs are set**

⇒ Refer to *Diagnostic Trouble Code (DTC) List - Vehicle on page 6-92*.

⇓ **If none of the DTCs are set**

Note: When turning vehicle OFF, open and close the driver door and wait 1 minute to allow all modules to shut down.

3. Cycle vehicle power 4 times, using a scan tool to monitor the state of the Drive Motor Position Sensor Offset Learn Status.

⇒ **If Drive Motor Position Sensor Offset Learn Status showed Motor Current Incorrect all 4 cycles**

Refer to 3-Phase Circuit Malfunction in Circuit/System Testing.

⇓ **If Drive Motor Position Sensor Offset Learn Status did not show Motor Current Incorrect all 4 cycles**

4. Vehicle ON.
5. Verify DTC P0C17 or P1B0F is not set.

⇒ **If any of the DTCs are set**

5.1. Program the T6 Power Inverter Module.

5.2. Verify the DTC does not set.

⇒ If the DTC sets, replace the T6 Power Inverter Module.

⇓ If the DTC does not set

5.3. All OK.

⇓ **If none of the DTCs are set**

6. All OK.

Circuit/System Testing

Note: You must perform the Circuit/System Verification before proceeding with Circuit/System Testing

3-Phase Circuit Malfunction

Danger: Always perform the High Voltage Disabling procedure prior to servicing any High Voltage component or connection. Personal Protection Equipment (PPE) and proper procedures must be followed.

The High Voltage Disabling procedure includes the following steps:

- ***Identify how to disable high voltage.***
- ***Identify how to test for the presence of high voltage.***
- ***Identify condition under which high voltage is always present and personal protection equipment (PPE) and proper procedures must be followed.***

Before working on any high voltage system, be sure to wear the following Personal Protection Equipment:

- ***Safety glasses with appropriate side shields when within 15 meters (50 feet) of the vehicle, either indoors or outdoors.***
- ***Certified and up-to-date Class "0" Insulation gloves rated at 1000V with leather protectors.***
  - ***Visually and functionally inspect the gloves before use.***
  - ***Wear the Insulation gloves with leather protectors at all times when working with the high voltage battery assembly, whether the system is energized or not.***

Failure to follow the procedures may result in serious injury or death.

1. Perform the *High Voltage Disabling on page 9-363* procedure for servicing the T6 Power Inverter Module or T12 Transmission.
2. Remove the 3-phase cable assembly from the T6 Power Inverter Module. Refer to *Drive Motor Generator Power Inverter Module Replacement on page 9-184*.
3. Test for infinite resistance between each of the AC circuit terminals listed below and ground for each phase of the M15 Drive Motor:

   Drive Motor

   - X5 terminal 3 phase U
   - X5 terminal 2 phase V
   - X5 terminal 1 phase W

⇒ **If less than infinite resistance**

3.1. Disconnect the 3-phase cable assembly from the transmission. Refer to *Drive Motor Replacement on page 16-45*.

3.2. Test for infinite resistance between the AC circuit terminal and ground and between the AC circuit terminal and the aluminum cable mounting block.

⇒ If less than infinite resistance, replace the 3-phase cable assembly.

⇒ If infinite resistance, replace the M15 Drive Motor.

⇓ **If infinite resistance for all AC circuits**

4. Replace the T6 Power Inverter Module.
5. Operate the vehicle within the Conditions for Running the DTC. You may also operate the vehicle within the conditions that you observed from the Freeze Frame/Failure Records data.
6. Verify the DTC does not set.

⇒ **If the DTC sets**

Replace the M15 Drive Motor.

⇓ **If the DTC does not set**

7. All OK.

Repair Instructions

Perform the *Diagnostic Repair Verification on page 6-123* after completing the repair.

- *Drive Motor Replacement on page 16-45* for Drive Motor 3-Phase Cable Assembly replacement
- *Control Module References on page 6-3* for T6 Power Inverter Module, often referred to as the Drive Motor Generator Power Inverter Module, replacement, programming, and setup.

DTC P0C19

Diagnostic Instructions

- Perform the *Diagnostic System Check - Vehicle on page 6-91* prior to using this diagnostic procedure.
- Review *Strategy Based Diagnosis on page 6-83* for an overview of the diagnostic approach.
- *Diagnostic Procedure Instructions on page 6-84* provides an overview of each diagnostic category.

DTC Descriptor

DTC P0C19: Drive Motor Torque Delivered Performance

Circuit/System Description

The drive motor is controlled by a motor control module. The motor control module constantly monitors the requested torque and the delivered torque of the drive motor. The control modules listed below are part of the power inverter module and are not serviced separately:

- Hybrid/EV powertrain control module 1
- Drive motor control module
- Auxiliary transmission fluid pump control module

Conditions for Running the DTC

- Vehicle ON.
- Drive motor 1 is commanded to develop torque.

Conditions for Setting the DTC

The motor control module has detected that drive motor torque is not being delivered as expected.

Action Taken When the DTC Sets

- P0C19 is a Type A DTC.
- The power to the motor will be limited.

Conditions for Clearing the DTC

P0C19 is a Type A DTC.

Diagnostic Aids

Extreme braking during regeneration may cause this DTC to be set in history.

Reference Information

DTC Type Reference

Powertrain Diagnostic Trouble Code (DTC) Type Definitions on page 6-92

Circuit/System Verification

1. Vehicle ON.
2. Verify DTC P0C19 is not set.

⇒ **If the DTC is set**

2.1. Verify the DTC does not set.

⇒ If the DTC sets, replace the T6 Power Inverter Module.

⇓ If the DTC does not set.

2.2. All OK.

⇓ **If the DTC is not set**

3. Operate the vehicle within the Conditions for Running the DTC. You may also operate the vehicle within the conditions that you observed from the Freeze Frame/Failure Records data.
4. Verify the DTC does not set.

⇒ **If the DTC sets**

Replace the M15 Drive Motor.

⇓ **If the DTC does not set**

5. All OK.

Repair Instructions

Perform the *Diagnostic Repair Verification on page 6-123* after completing the repair.

- *Drive Motor Replacement on page 16-45* for M15 Drive Motor replacement.
- *Control Module References on page 6-3* for T6 Power Inverter Module, often referred to as the Drive Motor Generator Power Inverter Module, replacement, programming, and setup.

DTC P0C28

Diagnostic Instructions

- Perform the *Diagnostic System Check - Vehicle on page 6-91* prior to using this diagnostic procedure.
- Review *Strategy Based Diagnosis on page 6-83* for an overview of the diagnostic approach.
- *Diagnostic Procedure Instructions on page 6-84* provides an overview of each diagnostic category.

DTC Descriptor

DTC P0C28: Auxiliary Transmission Fluid Pump High Current

Circuit/System Description

The power inverter module, often referred to as the drive motor generator power inverter module, contains two motor control modules and the hybrid/EV powertrain control module 1. One of the motor control modules operates the drive motor based upon hybrid/EV powertrain control module 1 commands. The other motor control module controls the auxiliary transmission fluid pump. The motors utilize 3 phase AC electricity. The motor stator coil is comprised of three phase circuits. The phase circuits are identified as phase U, phase V, and phase W. The U-V-W phase circuits are connected in a wye configuration. This means each phase is connected at a single, central point. The motor control modules monitor a current sensor connected to each motor phase. The current sensor is part of the motor assembly and is not serviced separately. The motor control modules are part of the power inverter module and are not serviced separately.

Conditions for Running the DTC

Vehicle is ON.

Conditions for Setting the DTC

One or more phase currents are greater than 35 A.

Action Taken When the DTC Sets

- DTC P0C28 is a Type A DTC.
- Vehicle propulsion will be disabled.

Conditions for Clearing the DTC

DTC P0C28 is a Type A DTC.

Reference Information

Schematic Reference

Hybrid/EV Controls Schematics on page 9-54

Electrical Information Reference

- *Circuit Testing on page 11-871*
- *Connector Repairs on page 11-895*
- *Testing for Intermittent Conditions and Poor Connections on page 11-877*
- *Wiring Repairs on page 11-883*

DTC Type Reference

Powertrain Diagnostic Trouble Code (DTC) Type Definitions on page 6-92

Circuit/System Testing

Danger: Always perform the High Voltage Disabling procedure prior to servicing any High Voltage component or connection. Personal Protection Equipment (PPE) and proper procedures must be followed.

The High Voltage Disabling procedure will perform the following tasks:

- ***Identify how to disable high voltage.***
- ***Identify how to test for the presence of high voltage.***
- ***Identify condition under which high voltage is always present and personal protection equipment (PPE) and proper procedures must be followed.***

Failure to follow the procedures exactly as written may result in serious injury or death.

1. Perform the *High Voltage Disabling on page 9-363* procedure for servicing the T6 Power Inverter Module or T12 Transmission.
2. Disconnect the X8 harness connector at the T6 Power Inverter Module.
3. Test for infinite resistance between each of the AC circuit terminals listed below and ground for each phase of the G5 Auxiliary Transmission Fluid Pump:
   - X8 terminal 1 phase U
   - X8 terminal 2 phase V
   - X8 terminal 3 phase W

⇒ **If less than infinite resistance**

Replace the G5 Auxiliary Transmission Fluid Pump.

⇓ **If infinite resistance**

4. Replace the T6 Power Inverter Module.

Repair Instructions

Perform the *Diagnostic Repair Verification on page 6-123* after completing the repair.

- *Transmission Fluid Pump Replacement on page 16-39* for G5 Auxiliary Transmission Fluid Pump , often referred to as the A/Trans Aux Fluid Pump Motor, replacement.
- *Control Module References on page 6-3* for T6 Power Inverter Module, often referred to as the Drive Motor Generator Power Inverter Module, replacement, programming, and setup.

DTC P0C4E

Diagnostic Instructions

- Perform the *Diagnostic System Check - Vehicle on page 6-91* prior to using this diagnostic procedure.
- Review *Strategy Based Diagnosis on page 6-83* for an overview of the diagnostic approach.
- *Diagnostic Procedure Instructions on page 6-84* provides an overview of each diagnostic category.

DTC Descriptors

DTC P0C4E: Drive Motor Position Exceeded Learning Limit

Circuit/System Description

The drive motor position sensor is monitored by the drive motor control module. The motor control module monitors the angular position, speed and direction of the drive motor rotor based upon the signals of the resolver-type position sensor. The position sensor contains a drive coil, two driven coils and an irregular shaped metallic rotor. The metallic rotor is mechanically attached to the shaft of the drive motor generator. At vehicle ON, the motor control module outputs a 7 V AC, 12 kHz excitation signal to the drive coil. The drive coil excitation signal creates a magnetic field surrounding the two driven coils and the irregular shaped rotor. The motor control module then monitors the two driven coil circuits for a return signal. The position of the irregular metallic rotor causes the magnetically-induced return signals of the driven coils to vary in size and shape. A comparison of the two driven coils signals allows the motor control module to determine the exact position, speed and direction of the drive motor rotor.

A measurement called offset is needed for accurate determination of the motor position. Offset is the relationship between the position sensor and the drive motor generator output shaft. Whenever the vehicle is cycled to OFF, the motor control module attempts to learn the offset of the drive motor position sensor by rapidly oscillating the motor and observing the position sensor signals.

Conditions for Running the DTC

- The vehicle is cycled OFF.
- Drive motor generator speed is less than 20 RPM.
- DC High Voltage is greater than 192 V.

Conditions for Setting the DTC

- The position sensor total offset exceeds 30 degrees during the learning process.
- The current learned value differs from the previous learned value by greater than 10 degrees.

Action Taken When the DTC Sets

DTC P0C4E is a Type A DTC.

Conditions for Clearing the DTC

DTC P0C4E is a Type A DTC.

Diagnostic Aids

- The drive motor position sensor circuits operate at very low current. These circuits are susceptible to moisture intrusion, corrosion, and terminal damage. Extreme care must be taken when probing terminals and manipulating harnesses. Poor terminal connections can result in intermittent operation.
- If the customer comments that the problem occurs only during moist environmental conditions: rain, snow, vehicle wash, etc., inspect the sensor wiring for signs of water intrusion.
- The sensor circuit loops are a twisted pair with each pair covered in a foil shield. The shield circuits outside of the transmission are grounded to a stud on the power inverter module, often referred to as the drive motor generator power inverter module.
- The drive motor position sensor harness circuits are shielded. Improperly grounded shield circuits may cause inaccurate sensor signals.
- Intermittent appearance of DTC P0A3F, P0A40, P0C52, P0C53, P0C5C, P0C5D, or P1B03 suggests intermittent position sensor circuit or connector problems.
- Drive motor control module monitors and reports the Drive Motor Position Sensor Offset Learn Status. This information can be observed using a scan tool. Status is updated during the transition from vehicle ON to vehicle OFF during normal conditions. Alternating, and possibly intermittent, appearance of “Not Run,” “Learn Failed Motor Speed Not Zero,” and “Motor Current Incorrect” suggests intermittent position sensor circuit or connector problems.

Drive Motor Position Sensor Offset Learn Status Descriptions

Drive Motor Position Sensor Offset Learn Status	Description	May Be Caused By
Not Run	Not run yet, waiting for key off	NA
	Aborted run due to detecting high voltage too low or motor speed too high	Key off while rolling, drive motor position sensor circuit problems, or high voltage system problems
	Ran but failed due to out of range values	Resolver or drive motor problems
Learn Successful	Position offset learned and stored successfully	NA
Learn Failed Motor Speed Not Zero	Speed high during offset learn but not before	Drive motor position sensor circuit problems
Learn Failed – High Voltage Too Low	High voltage contactors opened during offset learn	High voltage system problems
Motor Current Incorrect	Low current on 3-phase circuits between power inverter module and drive motor	Drive motor, power inverter module, or 3-phase cable assembly problem

Reference Information

Schematic Reference

Hybrid/EV Controls Schematics on page 9-54

Connector End View Reference

- *Component Connector End Views on page 11-455*
- *Inline Harness Connector End Views on page 11-761*

Electrical Information Reference

- *Circuit Testing on page 11-871*
- *Connector Repairs on page 11-895*
- *Testing for Intermittent Conditions and Poor Connections on page 11-877*
- *Wiring Repairs on page 11-883*

Circuit/System Verification

1. Vehicle ON.
2. Verify DTC P0A3F, P0A40, P0C52, P0C53, P0C5C, P0C5D, or P1B03 is not set.

⇒ **If any of the DTCs are set**

Refer to *DTC P0A3F, P0A40, P0C52, P0C53, P0C5C, P0C5D, or P1B03 on page 9-78*.

⇓ **If none of the DTCs are set**

3. Verify DTC P0C4E is not set.

⇒ **If the DTC sets**

3.1. Perform each of the operations listed below one at a time until the fault is corrected.

3.1.1. Replace the M15 Drive Motor

3.1.2. Replace the T6 Power Inverter Module

3.2. Repeat the DTC check in step 3.

⇓ **If the DTC does not set**

4. All OK.

Repair Instructions

Perform the *Diagnostic Repair Verification on page 6-123* after completing the repair.

- *Drive Motor Replacement on page 16-45* for B228 Drive Motor Position Sensor, often referred to as the Generator Position Sensor Stator (Unit A), replacement.
- *Control Module References on page 6-3* for T6 Power Inverter Module, often referred to as the Drive Motor Generator Power Inverter Module, replacement, programming, and setup.

DTC P0C76

Diagnostic Instructions

- Perform the *Diagnostic System Check - Vehicle on page 6-91* prior to using this diagnostic procedure.
- Review *Strategy Based Diagnosis on page 6-83* for an overview of the diagnostic approach.
- *Diagnostic Procedure Instructions on page 6-84* provides an overview of each diagnostic category.

DTC Descriptor

DTC P0C76: Hybrid/EV Battery System High Voltage Present

Circuit/System Description

The hybrid/EV powertrain control module 1 monitors system high voltage via the battery energy control module. The battery energy control module will diagnose its own systems and determine when a fault condition is present. Diagnostics and system status is communicated from the battery energy control module to the hybrid/EV powertrain control module 2 through serial data. The hybrid/EV powertrain control module 2 is the host controller for diagnostic trouble code (DTC) information.

The hybrid/EV battery pack contains 5 high voltage contactors and 2 transistors. The high voltage contactors allow the high voltage DC to be connected to the vehicle or safely contained within the hybrid/EV battery pack. The 5 high voltage contactors are a main positive high voltage contactor, main negative high voltage contactor, charge positive high voltage contactor, charge negative high voltage contactor, and multi-function high voltage contactor. The 2 transistors are the precharge transistor and heater transistor. These contactors/transistors close and open in sequence and are controlled by the hybrid/EV powertrain control module 2. The hybrid/EV powertrain control module 2 supplies voltage to the control circuit for the high voltage contactors/transistors. Ground is provided through the case ground.

Conditions for Running the DTC

- Vehicle is ON.
- The system voltage is at least 10 V.

Conditions for Setting the DTC

The high voltage bus voltage is greater than 200 V 3.5 seconds after the contactors have been commanded open.

Action Taken When the DTC Sets

DTC P0C76 is a Type A DTC.

Conditions for Clearing the DTC

DTC P0C76 is a Type A DTC.

Reference Information

DTC Type Reference

Powertrain Diagnostic Trouble Code (DTC) Type Definitions on page 6-92

Circuit/System Verification

1. Verify the contactors are operating normally. Refer to *Hybrid/EV Battery Voltage Present on page 9-437*.

⇒ **If the contactors are not operating properly**

Repair as necessary.

⇓ **If the contactors are operating properly**

2. Vehicle ON.
3. Verify DTC P0C76 is not set.

⇒ **If the DTC is set**

Replace the T6 Power Inverter Module.

⇓ **If the DTC is not set**

4. All OK

Repair Instructions

Perform the *Diagnostic Repair Verification on page 6-123* after completing the repair.

Control Module References on page 6-3 for T6 Power Inverter Module, often referred to as the Drive Motor Generator Power Inverter Module, replacement, programming, and setup

DTC P150D or P150E

Diagnostic Instructions

- Perform the *Diagnostic System Check - Vehicle on page 6-91* prior to using this diagnostic procedure.
- Review *Strategy Based Diagnosis on page 6-83* for an overview of the diagnostic approach.
- *Diagnostic Procedure Instructions on page 6-84* provides an overview of each diagnostic category.

DTC Descriptors

DTC P150D: Supply Voltage Circuit 2 Low Voltage

DTC P150E: Supply Voltage Circuit 1 Low Voltage

Circuit/System Description

The power inverter module, often referred to as the drive motor generator power inverter module, contains two motor control modules and the hybrid/EV powertrain control module 1. One of the motor control modules operates the drive motor based upon power inverter module commands. The other motor control module controls the auxiliary transmission fluid pump. The hybrid/EV powertrain control module 1 and the motor control modules share the power inverter module ignition voltage circuit, battery voltage circuits and chassis ground. The motor control modules and the hybrid/EV powertrain control module 1 are part of the power inverter module and are not serviced separately.

Conditions for Running the DTC

The vehicle is ON.

Conditions for Setting the DTC

P150D

Battery voltage on circuit 2 is less than 8.0 V for more than 2.0 seconds.

P150E

Battery voltage on circuit 1 is less than 8.0 V for more than 2.0 seconds.

Action Taken When the DTC Sets

DTC P150D and P150E are Type A DTCs.

Conditions for Clearing the DTC

DTC P150D and P150E are Type A DTCs.

Reference Information

Schematic Reference

Hybrid/EV Controls Schematics on page 9-54

Connector End View Reference

- *Component Connector End Views on page 11-455*
- *Inline Harness Connector End Views on page 11-761*

Electrical Information Reference

- *Circuit Testing on page 11-871*
- *Connector Repairs on page 11-895*
- *Testing for Intermittent Conditions and Poor Connections on page 11-877*
- *Wiring Repairs on page 11-883*

DTC Type Reference

Powertrain Diagnostic Trouble Code (DTC) Type Definitions on page 6-92

Circuit/System Testing

1. Vehicle ON.
2. Verify DTC P0562 or P0563 is not set.

⇒ **If any of the DTCs are set**

Refer to *DTC B1325, B1330, B1517, C0800, C0899, C0900, C12E1, C12E2, P0561-P0563, P1A0C, P1A0D, or P1EFC on page 9-9*.

⇓ **If none of the DTCs are set**

3. Verify DTC P150D or P150E is not set.

⇒ **If DTC P150D is set**

3.1. Vehicle OFF, disconnect the X1 harness connector at the T6 Power Inverter Module.

3.2. Verify a test lamp illuminates between the B+ circuit terminal 24 and ground.

⇒ If the test lamp does not illuminate and the circuit fuse is good

3.2.1. Remove the test lamp.

3.2.2. Test for less than 2 Ω in the B+ circuit end to end.

⇒ If 2 Ω or greater, repair the open/high resistance in the circuit.

⇒ If less than 2 Ω, verify the fuse is not open and there is voltage at the fuse.

⇒ If the test lamp does not illuminate and the circuit fuse is open

3.2.1. Remove the test lamp.

3.2.2. Test for infinite resistance between the B+ circuit and ground.

⇒ If less than infinite resistance, repair the short to ground on the circuit.

⇒ If infinite resistance, replace the T6 Power Inverter Module.

⇓ If the test lamp illuminates

3.3. Program the T6 Power Inverter Module.

3.4. Verify the DTC does not set.

⇒ If the DTC sets, replace the T6 Power Inverter Module.

⇓ If the DTC does not set

3.5. All OK.

⇒ **If DTC P150E is set**

3.1. Vehicle OFF, disconnect the X2 harness connector at the T6 Power Inverter Module.

3.2. Verify a test lamp illuminates between the B+ circuit terminal 35 and ground.

⇒ If the test lamp does not illuminate and the circuit fuse is good

3.2.1. Remove the test lamp.

3.2.2. Test for less than 2 Ω in the B+ circuit end to end.

⇒ If 2 Ω or greater, repair the open/high resistance in the circuit.

⇒ If less than 2 Ω, verify the fuse is not open and there is voltage at the fuse.

⇒ If the test lamp does not illuminate and the circuit fuse is open

3.2.1. Remove the test lamp.

3.2.2. Test for infinite resistance between the B+ circuit and ground.

⇒ If less than infinite resistance, repair the short to ground on the circuit.

⇒ If infinite resistance, replace the T6 Power Inverter Module.

⇓ If the test lamp illuminates

3.3. Program the T6 Power Inverter Module.

3.4. Verify the DTC does not set.

⇒ If the DTC sets, replace the T6 Power Inverter Module.

⇓ If the DTC does not set

3.5. All OK.

⇓ **If none of the DTCs are set**

4. All OK.

Repair Instructions

Perform the *Diagnostic Repair Verification on page 6-123* after completing the repair.

Control Module References on page 6-3 for T6 Power Inverter Module, often referred to as the Drive Motor Generator Power Inverter Module, replacement, programming, and setup

DTC P15F1

Diagnostic Instructions

- Perform the *Diagnostic System Check - Vehicle on page 6-91* prior to using this diagnostic procedure.
- Review *Strategy Based Diagnosis on page 6-83* for an overview of the diagnostic approach.
- *Diagnostic Procedure Instructions on page 6-84* provides an overview of each diagnostic category.

DTC Descriptor

DTC P15F1: Axle Torque Request Signal Message Counter Incorrect

Circuit/System Description

This diagnostic applies to internal microprocessor integrity conditions within the hybrid/EV powertrain control module 1. The hybrid/EV powertrain control module 1 is internal to the power inverter module, often referred to as the drive motor generator power inverter module, and is not serviced separately. The hybrid/EV powertrain control module 1 monitors its ability to read and write to the memory. The hybrid/EV powertrain control module 1 processor monitors the data to verify that the indicated axle torque requested calculation is correct.

Conditions for Running the DTC

- Vehicle is ON for more than 0.5 s.
- The system voltage is above 9.5 V.

Conditions for Setting the DTC

The control module has detected an internal malfunction.

Action Taken When the DTC Sets

- DTC P15F1 is a Type A DTC.
- The hybrid/EV powertrain control module 1 requests the hybrid/EV powertrain control module 2 to open the high voltage contactor relays.

Conditions for Clearing the DTC

DTC P15F1 is a Type A DTC.

Reference Information

DTC Type Reference

Powertrain Diagnostic Trouble Code (DTC) Type Definitions on page 6-92

Circuit/System Verification

1. Vehicle ON.
2. Verify DTC P15F1 is not set.

⇒ **If the DTC is set**

3. Verify the DTC does not set. If the DTC sets, replace the T6 Power Inverter Module.

⇓ **If the DTC is not set**

4. All OK.

Repair Instructions

Perform the *Diagnostic Repair Verification on page 6-123* after completing the repair.

Control Module References on page 6-3 for T6 Power Inverter Module, often referred to as Drive Motor Generator Power Inverter Module, replacement, programming, and setup.

DTC P15FB

Diagnostic Instructions

- Perform the *Diagnostic System Check - Vehicle on page 6-91* prior to using this diagnostic procedure.
- Review *Strategy Based Diagnosis on page 6-83* for an overview of the diagnostic approach.
- *Diagnostic Procedure Instructions on page 6-84* provides an overview of each diagnostic category.

DTC Descriptor

DTC P15FB: Brake Pedal Position Sensor Signal Message Counter Incorrect

Circuit/System Description

The electronic brake control module (EBCM) monitors the brake pedal position sensor in order to provide emission related brake pedal position information to the ECM. The EBCM sends the information, via the serial data circuit, to the ECM in a continuously repeating series of 16 rolling counts, with each count assigned a value.

Conditions for Running the DTC

DTC P15FB runs continuously when the vehicle is ON.

Conditions for Setting the DTC

The ECM detects that too many of the rolling count serial data messages have an incorrect value.

Action Taken When the DTC Sets

- DTC P15FB is a Type C DTC.
- Brake pedal position is defaulted to 0 for as long as the fault is active.

Conditions for Clearing the DTC

DTC P15FB is a Type C DTC.

Reference Information

Description and Operation

Hybrid Modes of Operation Description

DTC Type Reference

Powertrain Diagnostic Trouble Code (DTC) Type Definitions on page 6-92

Scan Tool Reference

Control Module References on page 6-3 for scan tool information.

Circuit/System Verification

1. Vehicle ON for 1 minute, then vehicle OFF for 30 seconds.
2. Verify DTC P15FB is not set.

⇒ **If the DTC is set**

2.1. Program the K20 ECM.

2.2. Verify the DTC does not set. If the DTC is set, replace the K20 ECM.

⇓ **If the DTC is not set**

3. All OK.

Repair Instructions

Perform the *Diagnostic Repair Verification on page 6-123* after completing the repair.

Control Module References on page 6-3 for K20 ECM replacement, programming and setup.

DTC P15FC

Diagnostic Instructions

- Perform the *Diagnostic System Check - Vehicle on page 6-91* prior to using this diagnostic procedure.
- Review *Strategy Based Diagnosis on page 6-83* for an overview of the diagnostic approach.
- *Diagnostic Procedure Instructions on page 6-84* provides an overview of each diagnostic category.

DTC Descriptors

DTC P15FC: Hybrid/EV Battery Contactor Status Message Counter Incorrect

Circuit/System Description

This is an internal fault detection of the power inverter module, often referred to as the drive motor generator power inverter module. This fault is handled inside the drive motor generator power inverter module and no external circuits are involved.

Conditions for Running the DTC

The control module runs the program to detect an internal fault when the Hybrid wake-up circuit is active.

Conditions for Setting the DTC

The control module has detected an internal malfunction.

Action Taken When the DTC Sets

DTC P15FC is a Type A DTC.

Conditions for Clearing the DTC

DTC P15FC is a Type A DTC.

Reference Information

DTC Type Reference

Powertrain Diagnostic Trouble Code (DTC) Type Definitions on page 6-92

Circuit/System Verification

1. Vehicle ON.
2. Verify DTC P15FC is not set.

⇒ **If the DTC is set**

3. Verify the DTC does not set. If the DTC sets, replace the T6 Power Inverter Module.

⇓ **If the DTC is not set**

4. All OK.

Repair Instructions

Perform the *Diagnostic Repair Verification on page 6-123* after completing the repair.

Control Module References on page 6-3 for T6 Power Inverter Module, often referred to as the Drive Motor Generator Power Inverter Module, replacement, programming and setup.

DTC P16F2

Diagnostic Instructions

- Perform the *Diagnostic System Check - Vehicle on page 6-91* prior to using this diagnostic procedure.
- Review *Strategy Based Diagnosis on page 6-83* for an overview of the diagnostic approach.
- *Diagnostic Procedure Instructions on page 6-84* provides an overview of each diagnostic category.

DTC Descriptor

DTC P16F2: Control Module Transmission Direction Switch Input Circuitry Performance

Circuit/System Description

The hybrid/EV powertrain control module 1 compares the transmission internal mode switch, often referred to as the automatic transmission manual shift shaft position switch, direction request to other data to verify that the indicated direction range switch calculation is correct.

Conditions for Running the DTC

- The vehicle is ON.
- Ignition voltage is greater than 9.5 V.

Conditions for Setting the DTC

Condition 1

- No transmission internal mode switch failure DTCs are set.
- A valid transmission internal mode switch direction is indicated by the internal mode switch circuits does not match the direction indicated by the hybrid/EV powertrain control module 1 software calculation.

Condition 2

- No transmission internal mode switch failure DTCs are set.
- Two valid transmission internal mode switch directions are indicated at the same time.

Condition 3

- One transmission internal mode switch direction switch circuit has failed.
- The hybrid/EV powertrain control module 1 calculates a transmission direction based upon the remaining transmission internal mode switch circuits but it does not match the direction indicated by the hybrid/EV powertrain control module 1 software.

Condition 4

- Multiple transmission internal mode switch directions are indicated and one transmission internal mode switch circuit has failed.
- Based upon the remaining transmission internal mode switch circuits the hybrid/EV powertrain control module 1 calculated two directions at the same time.

Condition 5

More than one transmission internal mode switch circuit has failed and the hybrid/EV powertrain control module 1 cannot calculate a transmission direction.

Action Taken When the DTC Sets

- P16F2 is a Type A DTC.
- Propulsion System becomes non-Active, but the hybrid powertrain control module 1 does not command the high voltage contactor relays to open.

Conditions for Clearing the DTC

P16F2 is a Type A DTC.

Reference Information

Schematic Reference

Hybrid/EV Controls Schematics on page 9-54

Connector End View Reference

Component Connector End Views on page 11-455

Electrical Information Reference

- *Circuit Testing on page 11-871*
- *Connector Repairs on page 11-895*
- *Testing for Intermittent Conditions and Poor Connections on page 11-877*
- *Wiring Repairs on page 11-883*

DTC Type Reference

Powertrain Diagnostic Trouble Code (DTC) Type Definitions on page 6-92

Scan Tool Reference

Control Module References on page 6-3 for scan tool information

Circuit/System Verification

1. Vehicle ON.
2. Verify DTC P181C, P181D, P181E, P181F, P183A, P183B, P183C, P183D, P183E, P184A or P184B is not set.

⇒ **If any of the DTCs are set**

Refer to *DTC P181C-P181F, P183A-P183E, P184A, or P184B on page 9-120.*

⇓ **If none of the DTCs are set**

3. Verify DTC P16F2 is not set.

⇒ **If the DTC is set**

3.1. Operate the vehicle within the Conditions for Running the DTC. You may also operate the vehicle within the conditions that you observed from the Freeze Frame/Failure Records data.

3.2. Verify the DTC does not set. If the DTC sets, replace the T6 Power Inverter Module.

⇓ **If the DTC is not set**

4. All OK.

Repair Instructions

Perform the *Diagnostic Repair Verification on page 6-123* after completing the repair.

Control Module References on page 6-3 for T6 Power Inverter Module, often referred to as the Drive Motor Generator Power Inverter Module, replacement, programming and setup.

DTC P16F3

Diagnostic Instructions

- Perform the *Diagnostic System Check - Vehicle on page 6-91* prior to using this diagnostic procedure.
- Review *Strategy Based Diagnosis on page 6-83* for an overview of the diagnostic approach.
- *Diagnostic Procedure Instructions on page 6-84* provides an overview of each diagnostic category.

DTC Descriptor

DTC P16F3: Control Module Redundant Memory Performance

Circuit/System Description

This diagnostic applies to internal microprocessor integrity conditions within the hybrid/EV powertrain control module 1. The hybrid/EV powertrain control module 1 is internal to the power inverter module, often referred to as the drive motor generator power inverter module, and is not serviced separately. The hybrid/EV powertrain control module 1 monitors its ability to read and write to the memory. The hybrid/EV powertrain control module 1 processor stores identical data in two locations and compares the data to verify that the stored data is correct.

Conditions for Running the DTC

The system voltage is greater than 9.5 V.

Conditions for Setting the DTC

The control module has detected that when some critical data is stored it is not the same as when it is retrieved.

Action Taken When the DTC Sets

P16F3 is a Type A DTC.

Conditions for Clearing the DTC

P16F3 is a Type A DTC.

Reference Information

DTC Type Reference

Powertrain Diagnostic Trouble Code (DTC) Type Definitions on page 6-92

Circuit/System Verification

1. Vehicle ON.
2. Verify any communication U-code DTC is not set.

⇒ **If any of the DTCs are set**

Refer to *Diagnostic Trouble Code (DTC) List - Vehicle on page 6-92*.

⇓ **If none of the DTCs are set**

3. Verify DTC P16F3 is not set.

⇒ **If the DTC is set**

4. Verify the DTC does not set. If the DTC sets, replace the T6 Power Inverter Module.

⇓ **If the DTC does not set**

5. All OK.

Repair Instructions

Perform the *Diagnostic Repair Verification on page 6-123* after completing the repair.

Control Module References on page 6-3 for T6 Power Inverter Module, often referred to as the Drive Motor Generator Power Inverter Module, replacement, programming, and setup.

DTC P16F4

Diagnostic Instructions

- Perform the *Diagnostic System Check - Vehicle on page 6-91* prior to using this diagnostic procedure.
- Review *Strategy Based Diagnosis on page 6-83* for an overview of the diagnostic approach.
- *Diagnostic Procedure Instructions on page 6-84* provides an overview of each diagnostic category.

DTC Descriptor

DTC P16F4: Control Module Transmission Range Switch Input Circuitry Performance

Circuit/System Description

The transmission internal mode switch, often referred to as the automatic transmission manual shift shaft position switch, contains two sliding hall-effect switch assemblies attached to the control valve body within the transmission. The 9 outputs from the switches indicate which position is selected by the transmission manual shaft. Four outputs (A, B, C, P) are range selection inputs to the engine control module (ECM). Five outputs (R1, R2, D1, D2, S) are direction selection inputs to the hybrid/EV powertrain control module 1. The Range input signals are represented as ECM scan tool parameters Internal Mode Switch A, B, C, and P. The Direction input signals are represented as Hybrid Powertrain Control Module scan tool parameters Internal Mode Switch 2 - R1, R2, D1, D2, and S. The input voltage at the modules is high when a switch is open and low when a switch is closed to ground. Each control module independently supplies power and ground to its respective switch assembly.

The hybrid/EV powertrain control module 1 is internal to the power inverter module, often referred to as the drive motor generator power inverter module, and is not serviced separately. The hybrid/EV powertrain control module 1 compares the transmission internal mode switch requested direction to other data to verify that the indicated direction and range switch calculation is correct.

Conditions for Running the DTC

- The vehicle is ON.
- Ignition voltage is greater than 9.5 V.

Conditions for Setting the DTC

Condition 1

The transmission direction, indicated by both the transmission internal mode switch range and direction switch circuits, are valid but do not match.

Condition 2

- One transmission internal mode switch circuit has failed.
- The hybrid/EV powertrain control module 1 calculates a transmission direction based upon the remaining transmission internal mode switch circuits.
- The calculated hybrid/EV powertrain control module 1 transmission direction does not match the direction indicated by the transmission internal mode switch range switch circuits.

Condition 3

- One transmission internal mode switch circuit has failed.
- The hybrid/EV powertrain control module 1 calculates a transmission direction based upon the remaining transmission internal mode switch circuits.
- The transmission internal mode switch range switch indicates a transitional position.

Condition 4

- One transmission internal mode switch circuit has failed.
- The hybrid/EV powertrain control module 1 calculates a transmission direction based upon the remaining transmission internal mode switch circuits.
- The ECM has indicated the transmission internal mode switch range switch parameter is invalid.

Condition 5

- More than one transmission internal mode switch circuit has failed and the hybrid/EV powertrain control module 1 cannot calculate a transmission direction.
- The transmission internal mode switch range switch indicates a transitional position.

Condition 6

- More than one transmission internal mode switch circuit has failed and the hybrid/EV powertrain control module 1 cannot calculate a transmission direction.
- The ECM has indicated the transmission internal mode switch range switch parameter is invalid.

Action Taken When the DTC Sets

- P16F4 is a Type A DTC.
- Vehicle propulsion will be disabled. The hybrid/EV powertrain control module 1 requests the hybrid/EV powertrain control module 2 to open the high voltage contactor relays.

Conditions for Clearing the DTC

P16F4 is a Type A DTC.

Reference Information

Schematic Reference

Hybrid/EV Controls Schematics on page 9-54

Connector End View Reference

Component Connector End Views on page 11-455

Electrical Information Reference

- *Circuit Testing on page 11-871*
- *Connector Repairs on page 11-895*
- *Testing for Intermittent Conditions and Poor Connections on page 11-877*
- *Wiring Repairs on page 11-883*

DTC Type Reference

Powertrain Diagnostic Trouble Code (DTC) Type Definitions on page 6-92

Scan Tool Reference

Control Module References on page 6-3 for scan tool information

Circuit/System Verification

1. Verify DTC P181C, P181D, P181E, P181F, P183A, P183B, P183C, P183D, P183E, P184A, or P184B is not set.

⇒ **If any of the DTCs are set**

Refer to *DTC P181C-P181F, P183A-P183E, P184A, or P184B on page 9-120*.

⇓ **If none of the DTCs are set**

2. Verify DTC P1824, P182A, P182B, P182C, P182D, P182E, P182F, P1838, or P1839 is not set.

⇒ **If any of the DTCs are set**

Refer to *DTC P1824, P182A-P182F, P1838, or P1839 on page 16-21*.

⇓ **If none of the DTCs are set**

3. Verify that DTC P16F4 is not set.

⇒ **If the DTC is set**

3.1. Operate the vehicle within the Conditions for Running the DTC. You may also operate the vehicle within the conditions that you observed from the Freeze Frame/Failure Records data.

3.2. Verify the DTC does not set. If the DTC sets, replace the T6 Power Inverter Module.

⇓ **If the DTC is not set**

4. All OK.

Repair Instructions

Perform the *Diagnostic Repair Verification on page 6-123* after completing the repair.

Control Module References on page 6-3 for T6 Power Inverter Module, often referred to as the Drive Motor Generator Power Inverter Module, replacement, programming and setup.

DTC P16F6

Diagnostic Instructions

- Perform the *Diagnostic System Check - Vehicle on page 6-91* prior to using this diagnostic procedure.
- Review *Strategy Based Diagnosis on page 6-83* for an overview of the diagnostic approach.
- *Diagnostic Procedure Instructions on page 6-84* provides an overview of each diagnostic category.

DTC Descriptor

DTC P16F6: Control Module Transmission Range Calculation Performance

Circuit/System Description

This diagnostic applies to internal microprocessor integrity conditions within the hybrid/EV powertrain control module 1. The hybrid/EV powertrain control module 1 is internal to the power inverter module, often referred to as the drive motor generator power inverter module, and is not serviced separately. The hybrid/EV powertrain control module 1 monitors its ability to read and write to the memory. The hybrid/EV powertrain control module 1 processor monitors the data to verify that the commanded range state calculation is correct. The control modules listed below are part of the power inverter module and are not serviced separately:

- Hybrid/EV powertrain control module 1
- Drive motor control module
- Auxiliary transmission fluid pump control module

Conditions for Running the DTC

- The vehicle is ON.
- The system voltage is 8–18 V.

Conditions for Setting the DTC

The control module has detected the commanded transmission range state is not correct based upon internal calculations or by a comparison to input or output torque conditions.

Action Taken When the DTC Sets

P16F6 is a Type A DTC.

Conditions for Clearing the DTC

P16F6 is a Type A DTC.

Reference Information

DTC Type Reference

Powertrain Diagnostic Trouble Code (DTC) Type Definitions on page 6-92

Circuit/System Verification

1. Vehicle ON.
2. Verify DTC P16F6 is not set.

⇒ **If the DTC is set**

3. Verify the DTC does not set. If the DTC sets, replace the T6 Power Inverter Module.

⇓ **If the DTC does not set**

4. All OK.

Repair Instructions

Perform the *Diagnostic Repair Verification on page 6-123* after completing the repair.

Control Module References on page 6-3 for T6 Power Inverter Module, often referred to as the Drive Motor Generator Power Inverter Module, replacement, programming and setup.

DTC P179A

Diagnostic Instructions

- Perform the *Diagnostic System Check - Vehicle on page 6-91* prior to using this diagnostic procedure.
- Review *Strategy Based Diagnosis on page 6-83* for an overview of the diagnostic approach.
- *Diagnostic Procedure Instructions on page 6-84* provides an overview of each diagnostic category.

DTC Descriptor

DTC P179A: Auxiliary Transmission Fluid Pump Overspeed

Circuit/System Description

The power inverter module, often referred to as the drive motor generator power inverter module, contains two motor control modules and the hybrid/EV powertrain control module 1. One of the motor control modules operates the drive motor generator based upon hybrid/EV powertrain control module 1 commands. The other motor control module controls the auxiliary transmission fluid pump motor.

The control modules listed below are part of the power inverter module and are not serviced separately:

- Hybrid/EV powertrain control module 1
- Drive motor control module
- Auxiliary transmission fluid pump control module

Conditions for Running the DTC

The vehicle is ON.

Conditions for Setting the DTC

An auxiliary transmission fluid pump motor speed of greater than 6500 RPM has been detected.

Action Taken When the DTC Sets

- DTC P179A is a Type A DTC.
- Vehicle speed is limited to 8 km/h (5 mph) for a maximum of 33 minutes.

Conditions for Clearing the DTC

DTC P179A is a Type A DTC.

Reference Information

DTC Type Reference

Powertrain Diagnostic Trouble Code (DTC) Type Definitions on page 6-92

Circuit/System Verification

1. Vehicle ON.
2. Verify DTC P179A is not set.

⇒ **If the DTC is set**

3. Verify the DTC does not set. If the DTC sets, replace the T6 Power Inverter Module.

⇓ **If the DTC does not set**

4. All OK.

Repair Instructions

Perform the *Diagnostic Repair Verification on page 6-123* after completing the repair.

Control Module References on page 6-3 for T6 Power Inverter Module, often referred to as the Drive Motor Generator Power Inverter Module, replacement, programming, and setup.

DTC P181C-P181F, P183A-P183E, P184A, or P184B

Diagnostic Instructions

- Perform the *Diagnostic System Check - Vehicle on page 6-91* prior to using this diagnostic procedure.
- Review *Strategy Based Diagnosis on page 6-83* for an overview of the diagnostic approach.
- *Diagnostic Procedure Instructions on page 6-84* provides an overview of each diagnostic category.

DTC Descriptors

DTC P181C: Internal Mode Switch 2 R1 Circuit Low Voltage
DTC P181D: Internal Mode Switch 2 R1 Circuit High Voltage
DTC P181E: Internal Mode Switch 2 R2 Circuit Low Voltage
DTC P181F: Internal Mode Switch 2 R2 Circuit High Voltage
DTC P183A: Internal Mode Switch 2 D1 Circuit Low Voltage
DTC P183B: Internal Mode Switch 2 D1 Circuit High Voltage
DTC P183C: Internal Mode Switch 2 D2 Circuit Low Voltage
DTC P183D: Internal Mode Switch 2 D2 Circuit High Voltage
DTC P183E: Internal Mode Switch 2 Invalid Range
DTC P184A: Internal Mode Switch 2 S Circuit Low Voltage
DTC P184B: Internal Mode Switch 2 S Circuit High Voltage

Diagnostic Fault Information

Circuit	Short to Ground	Open/High Resistance	Short to Voltage	Signal Performance
Signal R1	P181C	P181D	P181D	—
Signal R2	P181E	P181F	P181F	—
Signal D1	P183A	P183B	P183B	—
Signal D2	P183C	P183D	P183D	—
Signal S	P184A	P184B	P184B	—
Low Reference	—	P183E	—	—

Circuit/System Description

The transmission internal mode switch, often referred to as the automatic transmission manual shift shaft position switch, contains two sliding hall-effect switch assemblies attached to the control valve body within the transmission. The 9 outputs from the switches indicate which position is selected by the transmission manual shaft. Four outputs (A, B, C, P) are range selection inputs to the ECM. Five outputs (R1, R2, D1, D2, S) are direction selection inputs to the hybrid/EV powertrain control module 1. The Range input signals are represented as ECM scan tool parameters Internal Mode Switch A, B, C, and P. The Direction input signals are represented as hybrid powertrain control module scan tool parameters Internal Mode Switch 2 - R1, R2, D1, D2, and S. The input voltage at the modules is high when a switch is open and low when a switch is closed to ground. Each control module independently supplies power and ground to its respective switch assembly.

The hybrid/EV powertrain control module 1 is internal to the power inverter module, often referred to as the drive motor generator power inverter module, and is not serviced separately.

Conditions for Running the DTC

- The vehicle is ON for at least 5 seconds.
- The ignition voltage is greater than 9.0 V.

Conditions for Setting the DTC

The transmission internal mode switch direction switch state does not match a selected gear for 5 seconds.

Action Taken When the DTC Sets

DTCs P181C, P181D, P181E, P181F, P183A, P183B, P183C, P183D, P183E, P184A and P184B are Type B DTCs.

Conditions for Clearing the DTC

DTCs P181C, P181D, P181E, P181F, P183A, P183B, P183C, P183D, P183E, P184A and P184B are Type B DTCs.

Diagnostic Aids

The transmission internal mode switch can be damaged by electric current exceeding 25 mA. Test the transmission internal mode switch for an open condition whenever a short to voltage condition is observed.

Reference Information

Schematic Reference

- *Hybrid/EV Controls Schematics on page 9-54*
- *Automatic Transmission Controls Schematics on page 16-7*

Connector End View Reference

Component Connector End Views on page 11-455

Electrical Information Reference

- *Circuit Testing on page 11-871*
- *Connector Repairs on page 11-895*
- *Testing for Intermittent Conditions and Poor Connections on page 11-877*
- *Wiring Repairs on page 11-883*

DTC Type Reference

Powertrain Diagnostic Trouble Code (DTC) Type Definitions

Scan Tool Reference

Control Module References on page 6-3 for scan tool information

Special Tools

DT-44152 Jumper Harness

For equivalent regional tools, refer to *Special Tools on page 9-197*.

Circuit/System Verification

Vehicle ON, observe the scan tool internal mode switch 2 parameters while moving the gear shift lever from Park, through all gear selector positions, and back to Park. The parameters should match each gear range that is selected. Record any discrepancies. Refer to Internal Mode Switch 2 Parameters table below:

Internal Mode Switch 2 Parameters

Parameter	Selector Position				
	Park	Reverse	Neutral	Drive	Manual
Internal Mode Switch 2 - D1	HIGH	HIGH	LOW	LOW	LOW
Internal Mode Switch 2 - D2	LOW	LOW	HIGH	HIGH	HIGH
Internal Mode Switch 2 - R1	HIGH	LOW	LOW	HIGH	HIGH
Internal Mode Switch 2 - R2	LOW	HIGH	HIGH	LOW	LOW
Internal Mode Switch 2 - S	LOW	HIGH	LOW	HIGH	HIGH

Circuit/System Testing

1. Vehicle OFF, disconnect the X175 20-way harness connector at the transmission. Additional DTCs may set.
2. Install the *DT-44152* jumper harness to the vehicle harness side only.
3. Vehicle OFF and all vehicle systems OFF. It may take up to 2 minutes for all vehicle systems to power down.
4. Test for less than 2 Ω between the low reference circuit terminal L and ground.

⇒ **If 2 Ω or greater**

4.1. Disconnect the X2 harness connector at the T6 Power Inverter Module.

4.2. Test for less than 2 Ω in the low reference circuit end to end.

⇒ If 2 Ω or greater, repair the open/high resistance in the circuit.

⇒ If less than 2 Ω, replace the T6 Power Inverter Module.

⇓ **If less than 2 Ω**

5. Vehicle ON.
6. Verify each scan tool D1/D2/R1/R2/S parameter displays HIGH.

⇒ **If any parameter displays LOW**

6.1. Vehicle OFF.

6.2. Disconnect the X2 harness connector at the T6 Power Inverter Module.

6.3. Test for less than 2 Ω between the appropriate signal circuit terminal, as listed below, and ground.

- Parameter D1 – terminal 9
- Parameter D2 – terminal 17
- Parameter R1 – terminal 10
- Parameter R2 – terminal 18
- Parameter S – terminal 8

⇒ If less than 2 Ω, repair the short to ground on the circuit.

⇒ If 2 Ω or greater, replace the T6 Power Inverter Module.

⇓ **If all parameters display HIGH**

7. Vehicle ON.
8. Install a 3 A fused jumper wire between the low reference circuit terminal 16 and each signal terminal listed below one at a time.
   - Parameter D1 – terminal 9
   - Parameter D2 – terminal 17
   - Parameter R1 – terminal 10

- Parameter R2 – terminal 18
- Parameter S – terminal 8

9. Verify each scan tool D1/D2/R1/R2/S parameter displays LOW when grounded.

⇒ **If any parameter displays HIGH when grounded**

9.1. Vehicle OFF.

9.2. Disconnect the X2 harness connector at the T6 Power Inverter Module.

9.3. Test for less than 2 Ω in the appropriate signal circuit end to end.

⇒ If 2 Ω or greater, repair the open/high resistance in the circuit.

⇒ If less than 2 Ω, replace the T6 Power Inverter Module.

⇓ **If all parameters display LOW when grounded**

10. Test or replace the transmission internal extension harness or the automatic transmission B15 Transmission Internal Mode Switch.

Repair Instructions

Perform the *Diagnostic Repair Verification on page 6-123* after completing the repair.

- *Transmission Replacement on page 16-54* for transmission internal mode switch, often referred to as the automatic transmission manual shift shaft position switch, replacement
- *Transmission Replacement on page 16-54* for Wiring Harness Extension Harness replacement
- *Control Module References on page 6-3* for Power Inverter Module, often referred to as the Drive Motor Generator Power Inverter Module, replacement, programming and setup.

DTC P183F

Diagnostic Instructions

- Perform the *Diagnostic System Check - Vehicle on page 6-91* prior to using this diagnostic procedure.
- Review *Strategy Based Diagnosis on page 6-83* for an overview of the diagnostic approach.
- *Diagnostic Procedure Instructions on page 6-84* provides an overview of each diagnostic category.

DTC Descriptor

DTC P183F: Internal Mode Switch 1-2 Not Plausible

Circuit/System Description

The transmission internal mode switch, often referred to as the automatic transmission manual shift shaft position switch, contains two sliding hall-effect switch assemblies attached to the control valve body within the transmission. The 9 outputs from the switches indicate which position is selected by the transmission manual shaft. Four outputs (A, B, C, P) are range selection inputs to the engine control module (ECM). Five outputs (R1, R2, D1, D2, S) are direction selection inputs to the hybrid/EV powertrain control module 1. The Range input signals are represented as ECM scan tool parameters Internal Mode Switch A, B, C, and P. The Direction input signals are represented as Hybrid Powertrain Control Module scan tool parameters Internal Mode Switch 2 - R1, R2, D1, D2, and S. The input voltage at the modules is high when a switch is open and low when a switch is closed to ground. Each control module independently supplies power and ground to its respective switch assembly.

The hybrid/EV powertrain control module 1 is internal to the power inverter module, often referred to as the drive motor generator power inverter module, and is not serviced separately. The hybrid/EV powertrain control module 1 compares the transmission internal mode switch requested direction to other data to verify that the indicated direction and range switch calculation is correct.

Conditions for Running the DTC

- P181C-P181F, P1824, P182A-P182F, P183A-P183E, P1838, P1839, P184A, and P184B are not set.
- The vehicle is ON.

Conditions for Setting the DTC

The transmission internal mode switch direction state does not match the transmission internal mode switch range state.

Action Taken When the DTC Sets

- P183F is a Type A DTC.
- There may be a complete loss of propulsion in Drive or Reverse.

Conditions for Clearing the DTC

P183F is a Type A DTC.

Reference Information

Schematic Reference

Hybrid/EV Controls Schematics on page 9-54

Connector End View Reference

Component Connector End Views on page 11-455

DTC Type Reference

Powertrain Diagnostic Trouble Code (DTC) Type Definitions on page 6-92

Scan Tool Reference

Control Module References on page 6-3 for scan tool information

Circuit/System Verification

1. Vehicle ON.
2. Verify DTC P181C, P181D, P181E, P181F, P183A, P183B, P183C, P183D, P183E, P184A or P184B is not set.

⇒ **If any of the DTCs are set**

Refer to *DTC P181C-P181F, P183A-P183E, P184A, or P184B on page 9-120*.

⇓ **If none of the DTCs are set**

3. Verify DTC P183F is not set.

⇒ **If the DTC is set**

3.1. Operate the vehicle within the Conditions for Running the DTC. You may also operate the vehicle within the conditions that you observed from the Freeze Frame/Failure Records data.

3.2. Verify the DTC does not set. If the DTC sets, replace the T6 Power Inverter Module.

⇓ **If the DTC is not set**

4. All OK.

Repair Instructions

Perform the *Diagnostic Repair Verification on page 6-123* after completing the repair.

Control Module References on page 6-3 for T6 Power Inverter Module, often referred to as the Drive Motor Generator Power Inverter Module, replacement, programming, and setup.

DTC P1A4F, P1A50, P1A51, P1ADC, or P1EB6

Diagnostic Instructions

- Perform the *Diagnostic System Check - Vehicle on page 6-91* prior to using this diagnostic procedure.
- Review *Strategy Based Diagnosis on page 6-83* for an overview of the diagnostic approach.
- *Diagnostic Procedure Instructions on page 6-84* provides an overview of each diagnostic category.

DTC Descriptor

DTC P1A4F: Drive Motor Control Module Not Programmed
DTC P1A50: Drive Motor Control Module Random Access Memory
DTC P1A51: Drive Motor Control Module Read Only Memory
DTC P1ADC: Drive Motor Control Module Long Term Memory Performance
DTC P1EB6: Drive Motor Control Module Long Term Memory Reset

Circuit/System Description

The power inverter module, often referred to as the drive motor generator power inverter module, contains the drive motor control module. This fault is handled inside the drive motor control module and no external circuits are involved. The control modules listed below are part of the power inverter module and are not serviced separately:

- Hybrid/EV powertrain control module 1
- Drive motor control module
- Auxiliary transmission fluid pump control module

Conditions for Running the DTC

The vehicle is ON.

Conditions for Setting the DTC

The control module has detected an internal malfunction or a service module has been installed but not yet programmed.

Action Taken When the DTC Sets

- P1A4F, P1A50, P1A51, and P1EB6 are Type A DTCs.
- P1ADC is a Type B DTC.
- When the DTC P1A50 or P1A51 sets, the hybrid/EV powertrain control module 1 commands the hybrid/EV powertrain control module 2 to open the high voltage contactor relays.

Conditions for Clearing the DTC

- P1A4F, P1A50, P1A51, and P1EB6 are Type A DTCs.
- P1ADC is a Type B DTC.

Reference Information

DTC Type Reference

Powertrain Diagnostic Trouble Code (DTC) Type Definitions on page 6-92

Circuit/System Verification

1. Vehicle ON.
2. Verify DTC P0562 is not set.

⇒ **If the DTC is set**

Refer to *DTC B1325, B1330, B1517, C0800, C0899, C0900, C12E1, C12E2, P0561-P0563, P1A0C, P1A0D, or P1EFC on page 9-9*.

⇓ **If the DTC is not set**

3. Verify DTC P1A4F, P1A50, P1A51, P1ADC and P1EB6 is not set.

⇒ **If any of the DTCs are set**

3.1. Program the T6 Power Inverter Module.
3.2. Verify the DTC does not set.
⇒ If the DTC sets, replace the T6 Power Inverter Module.
⇓ If the DTC does not set
3.3. All OK.

⇓ **If none of the DTCs are set**

4. All OK.

Repair Instructions

Perform the *Diagnostic Repair Verification on page 6-123* after completing the repair.

Control Module References on page 6-3 for T6 Power Inverter Module replacement, programming and setup.

DTC P1A56

Diagnostic Instructions

- Perform the *Diagnostic System Check - Vehicle on page 6-91* prior to using this diagnostic procedure.
- Review *Strategy Based Diagnosis on page 6-83* for an overview of the diagnostic approach.
- *Diagnostic Procedure Instructions on page 6-84* provides an overview of each diagnostic category.

DTC Descriptor

DTC P1A56: Hybrid/EV System Voltage Discharge Circuit

Circuit/System Description

The power inverter module, often referred to as the drive motor generator power inverter module, contains DC high voltage capacitors and a resistor circuit intended to discharge the electrical energy stored within those capacitors. Whenever the high voltage contactors are opened, the hybrid/EV powertrain control module 1 connects the internal resistor circuit across the capacitor circuit. The level of the high voltage is monitored by the hybrid/EV powertrain control module 1 before and after the resistor circuit has been connected. If the voltage level remains high for too long, the hybrid/EV powertrain control module 1 sets this DTC and then commands the motor control modules to connect the drive motor 3 phase circuits across the DC high voltage positive and negative circuits thereby discharging the capacitors. The control modules listed below are part of the power inverter module and are not serviced separately:

- Hybrid/EV powertrain control module 1
- Drive motor control module
- Auxiliary transmission fluid pump control module

Conditions for Running the DTC

- High voltage inverter rationalized voltage is greater than 55 V.
- High Voltage Contactors are commanded Open.

Conditions for Setting the DTC

- The high voltage bus decrease is less than 20 V within 0.1 s of commanding the discharge circuit ON.

  Or
- The high voltage bus discharge circuit status is disabled or unavailable for 10 consecutive discharge attempts.

Action Taken When the DTC Sets

- DTC P1A56 is a Type C DTC.
- The motor control modules are commanded to discharge the capacitor through the drive motor 3 phase stator circuits.

Conditions for Clearing the DTC

DTC P1A56 is a Type C DTC.

Diagnostic Aids

A high-pitched whine may come from the transmission assembly whenever the HV DC capacitance is discharged through the drive motor stator circuits.

Reference Information

DTC Type Reference

Powertrain Diagnostic Trouble Code (DTC) Type Definitions on page 6-92

Circuit/System Verification

1. Vehicle ON.
2. Verify DTC P1A56 is not set.

⇒ **If the DTC is set**

2.1. Operate the vehicle within the Conditions for Running the DTC. You may also operate the vehicle within the conditions that you observed from the Freeze Frame/Failure Records data.

2.2. Verify the DTC does not set.

⇒ If the DTC sets, replace the T6 Power Inverter Module.

⇓ **If the DTC is not set**

3. All OK.

Repair Instructions

Perform the *Diagnostic Repair Verification on page 6-123* after completing the repair.

Control Module References on page 6-3 for T6 Power Inverter Module, often referred to as the Drive Motor Generator Power Inverter Module, replacement, programming, and setup.

DTC P1ADE or P1ADF

Diagnostic Instructions

- Perform the *Diagnostic System Check - Vehicle on page 6-91* prior to using this diagnostic procedure.
- Review *Strategy Based Diagnosis on page 6-83* for an overview of the diagnostic approach.
- *Diagnostic Procedure Instructions on page 6-84* provides an overview of each diagnostic category.

DTC Descriptors

DTC P1ADE: Drive Motor Control Module System Voltage Low Voltage

DTC P1ADF: Drive Motor Control Module System Voltage High Voltage

Circuit/System Description

The power inverter module, often referred to as the drive motor generator power inverter module, contains two motor control modules and the hybrid/EV powertrain control module 1. One of the motor control modules operates the drive motor based upon power inverter module commands. The other motor control module controls the auxiliary transmission fluid pump. The hybrid/EV powertrain control module 1 and the motor control modules share the power inverter module ignition voltage circuit, battery voltage circuits and chassis ground. The motor control modules and the hybrid/EV powertrain control module 1 are part of the power inverter module and are not serviced separately.

Conditions for Running the DTC

The vehicle is ON.

Conditions for Setting the DTC

P1ADE

System voltage is less than or equal to 10 V for 5 seconds.

P1ADF

System voltage is greater than or equal to 18 V for 5 seconds.

Action Taken When the DTC Sets

P1ADE and P1ADF are Type C DTCs.

Conditions for Clearing the DTC

P1ADE and P1ADF are Type C DTCs.

Diagnostic Aids

A battery charger or vehicle jump start may cause DTC P1ADF to set.

Reference Information

DTC Type Reference

Powertrain Diagnostic Trouble Code (DTC) Type Definitions on page 6-92

Circuit/System Verification

1. Vehicle ON.
2. Verify DTC P0562 or P0563 is not set.

⇒ **If any of the DTCs are set**

Refer to *DTC B1325, B1330, B1517, C0800, C0899, C0900, C12E1, C12E2, P0561-P0563, P1A0C, P1A0D, or P1EFC on page 9-9*.

⇓ **If none of the DTCs are set**

3. Verify DTC P1ADE or P1ADF is not set.

⇒ **If any of the DTCs are set**

4. Verify the DTC does not set. If the DTC sets, replace the T6 Power Inverter Module.

⇓ **If the DTC does not set**

5. All OK.

Repair Instructions

Perform the *Diagnostic Repair Verification on page 6-123* after completing the repair.

Control Module References on page 6-3 for T6 Power Inverter Module, often referred to as the Drive Motor Generator Power Inverter Module, replacement, programming, and setup.

DTC P1AE8 or P1AE9

Diagnostic Instructions

- Perform the *Diagnostic System Check - Vehicle on page 6-91* prior to using this diagnostic procedure.
- Review *Strategy Based Diagnosis on page 6-83* for an overview of the diagnostic approach.
- *Diagnostic Procedure Instructions on page 6-84* provides an overview of each diagnostic category.

DTC Descriptors

DTC P1AE8: Drive Motor Control Module Hybrid/EV Battery Voltage Sense Circuit Low Voltage

DTC P1AE9: Drive Motor Control Module Hybrid/EV Battery Voltage Sense Circuit High Voltage

Circuit/System Description

The power inverter module, often referred to as the drive motor generator power inverter module, contains the drive motor control module. The drive motor control module monitors its internal high voltage sensor for correct operation, no external circuits are involved. The modules listed below are part of the power inverter module and are not serviced separately.

- Hybrid/EV powertrain control module 1
- Motor control module
- Auxiliary transmission fluid pump control module

Conditions for Running the DTC

- The vehicle is ON.
- The system voltage is greater than 6 V.
- The high voltage contactor relays are closed.

Conditions for Setting the DTC

P1AE8

With the hybrid/EV battery system contactors closed, the drive motor control module detects high voltage sensor voltage less than 30 V.

P1AE9

The drive motor control module detects high voltage sensor voltage greater than 500 V.

Action Taken When the DTC Sets

P1AE8 and P1AE9 are Type A DTCs.

Conditions for Clearing the DTC

P1AE8 and P1AE9 are Type A DTCs.

Reference Information

DTC Type Reference

Powertrain Diagnostic Trouble Code (DTC) Type Definitions on page 6-92

Circuit/System Verification

1. Vehicle ON.
2. Verify DTC P1AEE is not set.

⇒ **If the DTC is set**

Refer to *DTC P1AEC or P1AEE on page 9-128*.

⇓ **If the DTC is not set**

3. Verify DTC P1AE8 and P1AE9 is not set.

⇒ **If any of the DTCs are set**

4. Verify the DTC does not set. If the DTC sets, replace the T6 Power Inverter Module.

⇓ **If none of the DTCs are set**

5. All OK.

Repair Instructions

Perform the *Diagnostic Repair Verification on page 6-123* after completing the repair.

Control Module References on page 6-3 for T6 Power Inverter Module, often referred to as the Drive Motor Generator Power Inverter Module, replacement, programming and setup.

DTC P1AEC or P1AEE

Diagnostic Instructions

- Perform the *Diagnostic System Check - Vehicle on page 6-91* prior to using this diagnostic procedure.
- Review *Strategy Based Diagnosis on page 6-83* for an overview of the diagnostic approach.
- *Diagnostic Procedure Instructions on page 6-84* provides an overview of each diagnostic category.

DTC Descriptors

DTC P1AEC: Drive Motor Control Module Hybrid/EV Battery System Voltage

DTC P1AEE: Drive Motor Control Module Hybrid/EV Battery System Voltage High Voltage

Circuit/System Description

The power inverter module, often referred to as the drive motor generator power inverter module contains the drive motor control module. The motor control module measures hybrid battery high voltage with several internal sensors. The hybrid/EV powertrain control module 2 also monitors high voltage with several internal sensors. The hybrid/EV powertrain control module 2 high voltage measurement is broadcast over serial data. The control modules listed below are part of the power inverter module and are not serviced separately:

- Hybrid/EV powertrain control module 1
- Drive motor control module
- Auxiliary transmission fluid pump control module

P1AEC

The motor control module compares the motor control module voltage value with the hybrid/EV powertrain control 2 battery pack voltage value to insure accuracy.

P1AEE

The motor control module monitors for high voltage that is greater than the system expects during normal operation.

Conditions for Running the DTC

The hybrid/EV battery system contactor relays are closed.

P1AEC

P1AE8 or P1AE9 are not set.

Conditions for Setting the DTC

P1AEC

A difference of more than 40 V on the high voltage circuit is detected between the hybrid/EV powertrain control module 1 and the hybrid/EV powertrain control module 2 high voltage sensor.

Or

A difference of more than 50 V on the high voltage circuit is detected between the motor control module and the hybrid/EV powertrain control module 2 sum of the battery pack voltages.

P1AEE

Greater than 443 V on the high voltage circuit is detected by the motor control module.

Action Taken When the DTC Sets

P1AEC

- P1AEC is a Type A DTC.
- The power to the motor will be limited.

P1AEE

- P1AEE is a Type A DTC.
- The power inverter module requests the hybrid/EV powertrain control module 2 to open the high voltage contactor relays.

Conditions for Clearing the DTC

- P1AEC is a Type A DTC.
- P1AEE is a Type A DTC.

Diagnostic Aids

Conditions such as loss of battery energy control module power or ground or removal of the high voltage manual disconnect while the vehicle was driving could create a voltage surge that may set DTC P1AEE. History DTC P1AEE may indicate that the high voltage contactor relays opened while large current flow was present.

Reference Information

DTC Type Reference

Powertrain Diagnostic Trouble Code (DTC) Type Definitions on page 6-92

Circuit/System Verification

1. Vehicle ON.
2. Verify DTC P0ABB, P0ABC, or P0ABD is not set.

⇒ **If any of the DTCs are set**

Refer to *Diagnostic Trouble Code (DTC) List - Vehicle on page 6-92*.

⇓ **If none of the DTCs are set**

3. Verify DTC P1AEC or P1AEE is not set.
   - ⇒ If the DTC sets, replace the T6 Power Inverter Module.
   - ⇓ If the DTC does not set.
4. All OK.

⇓ **If none of the DTCs are set**

5. All OK.

Repair Instructions

Perform the *Diagnostic Repair Verification on page 6-123* after completing the repair.

Control Module References on page 6-3 for T6 Power Inverter Module, often referred to as the Drive Motor Generator Power Inverter Module, replacement, programming, and setup.

DTC P1AF0

Diagnostic Instructions

- Perform the *Diagnostic System Check - Vehicle on page 6-91* prior to using this diagnostic procedure.
- Review *Strategy Based Diagnosis on page 6-83* for an overview of the diagnostic approach.
- *Diagnostic Procedure Instructions on page 6-84* provides an overview of each diagnostic category.

DTC Descriptor

DTC P1AF0: Drive Motor Control Module Hybrid/EV Battery Voltage System Isolation Lost

Circuit/System Description

The power inverter module, often referred to as the drive motor generator power inverter module, contains two motor control modules and the hybrid/EV powertrain control module 1. One of the motor control modules operates the drive motor based upon power inverter module commands. The other motor control module controls the auxiliary transmission fluid pump. Each motor control module monitors high voltage with several internal sensors. The motor control modules test for loss of isolation between each high voltage bus and vehicle chassis. The motor control modules test for high voltage isolation when the high voltage contactors are closed. The hybrid/EV powertrain control module 2 only tests the hybrid/EV battery pack for high voltage loss of isolation when the high voltage contactors are open.

If the motor control modules detect an isolation fault on either the positive or negative high voltage bus, the hybrid/EV powertrain control module 1 reports a fault. The isolation fault may be caused by any of the following components included in the high voltage system:

- 14 V power module
- Air conditioning control module
- Hybrid/EV powertrain control module 2
- Cabin heater control module
- Hybrid/EV battery pack coolant heater
- Power inverter module
- Drive motor

Conditions for Running the DTC

- P1AE8, P1AE9 or P1AEC is not set.
- The high voltage contactor relays are closed.
- High voltage is greater than 50 V.
- Ignition voltage is 8–18 V.

Conditions for Setting the DTC

The ratio between negative Mid-Pack Voltage and positive Mid-Pack Voltage is greater than 4.53 for greater than 2.5 seconds.

Action Taken When the DTC Sets

P1AF0 is a Type B DTC.

Conditions for Clearing the DTC

P1AF0 is a Type B DTC.

Reference Information

Schematic Reference

Hybrid/EV Controls Schematics on page 9-54

Connector End View Reference

Component Connector End Views on page 11-455

Electrical Information Reference

- *Circuit Testing on page 11-871*
- *Connector Repairs on page 11-895*
- *Testing for Intermittent Conditions and Poor Connections on page 11-877*
- *Wiring Repairs on page 11-883*

DTC Type Reference

Powertrain Diagnostic Trouble Code (DTC) Type Definitions on page 6-92

Scan Tool Reference

Control Module References on page 6-3 for scan tool information

Circuit/System Verification

1. Vehicle ON.
2. Verify DTC P1F0E is not set.

⇒ **If the DTC is set**

Refer to *DTC P0AA6, P0DAA, P1AE6, or P1F0E on page 9-392*.

⇓ **If the DTC is not set**

3. Verify DTC P0A78, P0BFD or P0C01 is not set.

⇒ **If any of the DTCs are set**

Refer to *Diagnostic Trouble Code (DTC) List - Vehicle on page 6-92*.

⇓ **If none of the DTCs are set**

4. Verify DTC P1AF0 is not set.

⇒ **If the DTC is set**

Refer to *Loss of Isolation on the High Voltage Main Bus on page 9-430*.

⇓ **If the DTCs is not set**

5. All OK.

Repair Instructions

Perform the *Diagnostic Repair Verification on page 6-123* after completing the repair.

DTC P1AF4 or P1AF5

Diagnostic Instructions

- Perform the *Diagnostic System Check - Vehicle on page 6-91* prior to using this diagnostic procedure.
- Review *Strategy Based Diagnosis on page 6-83* for an overview of the diagnostic approach.
- *Diagnostic Procedure Instructions on page 6-84* provides an overview of each diagnostic category.

DTC Descriptors

DTC P1AF4: Drive Motor Control Module Hybrid/EV Battery Voltage Isolation Sensing Circuit 1 Low Voltage

DTC P1AF5: Drive Motor Control Module Hybrid/EV Battery Voltage Isolation Sensing Circuit 1 High Voltage

Circuit/System Description

Vehicles equipped with high voltage storage and propulsion capability are designed with the high voltage circuits isolated from the vehicle chassis.

The power inverter module, often referred to as the drive motor generator power inverter module, contains the drive motor control module. The motor control module measures hybrid battery high voltage with several internal sensors. The motor control module tests for loss of isolation between each high voltage bus and vehicle chassis. The motor control module tests for isolation when the high voltage contactor relays are closed. The hybrid/EV powertrain control module 2 only tests the hybrid/EV battery pack for high voltage loss of isolation when the high voltage contactor relays are open.

Conditions for Running the DTC

P1AF4

- The vehicle is ON.
- The hybrid/EV contactors are closed.

P1AF5

- DTCs P1AE8, P1AE9 or P1AEC not set.
- The vehicle is ON.

Conditions for Setting the DTC

P1AF4

The motor control module detects isolation sensor voltage less than 20 V.

P1AF5

The motor control module detects the value of the mid-pack voltage subtracted from the pack voltage is greater than 40 V.

Action Taken When the DTC Sets

- DTC P1AF4 is a Type B DTC.
- DTC P1AF5 is a Type A DTC.
- The hybrid/EV powertrain control module 1 requests the hybrid/EV powertrain control module 2 to open the high voltage contactor relays.

Conditions for Clearing the DTC

- DTC P1AF4 is a Type B DTC.
- DTC P1AF5 is a Type A DTC.

Reference Information

DTC Type Reference

Powertrain Diagnostic Trouble Code (DTC) Type Definitions on page 6-92

Circuit/System Verification

1. Vehicle ON.
2. Verify DTC P0AA6 is not set.

⇒ **If the DTC is set**

Refer to *DTC P0AA6, P0DAA, P1AE6, or P1F0E on page 9-392*.

⇓ **If the DTC is not set**

3. Verify DTC P1AF4 or P1AF5 is not set.

⇒ If the DTC sets, replace the T6 Power Inverter Module.

⇓ If the DTC does not set.

4. All OK.

⇓ **If none of the DTCs are set**

5. All OK.

Repair Instructions

Perform the *Diagnostic Repair Verification on page 6-123* after completing the repair.

Control Module References on page 6-3 for T6 Power Inverter Module, often referred to as the Drive Motor Generator Power Inverter Module, replacement, programming, and setup.

DTC P1B0B or P1B0C

Diagnostic Instructions

- Perform the *Diagnostic System Check - Vehicle on page 6-91* prior to using this diagnostic procedure.
- Review *Strategy Based Diagnosis on page 6-83* for an overview of the diagnostic approach.
- *Diagnostic Procedure Instructions on page 6-84* provides an overview of each diagnostic category.

DTC Descriptors

DTC P1B0B: Drive Motor 1 Control Module Hybrid/EV Battery Voltage Isolation Sensing Circuit 2 Low Voltage
DTC P1B0C: Drive Motor 1 Control Module Hybrid/EV Battery Voltage Isolation Sensing Circuit 2 High Voltage

Circuit/System Description

The power inverter module, often referred to as the drive motor generator power inverter module, contains the drive motor control module. The motor control module measures hybrid battery high voltage with several internal sensors. The motor control module tests for loss of isolation between each high voltage bus and vehicle chassis. The motor control module tests for isolation when the high voltage contactor relays are closed. The hybrid/EV powertrain control module 2 only tests the hybrid/EV battery pack for high voltage loss of isolation when the high voltage contactor relays are open.

Conditions for Running the DTC

The vehicle is ON.

P1B0C

DTC P1AE8 or P1AE9 is not set.

Conditions for Setting the DTC

P1B0B

The motor control module detects isolation sensor voltage less than 20 V.

P1B0C

The motor control module detects isolation sensor voltage greater than 40 V.

Action Taken When the DTC Sets

- DTCs P1B0B and P1B0C are Type B DTCs.
- The hybrid/EV powertrain control module 1 requests the hybrid/EV powertrain control module 2 to open the high voltage contactor relays.

Conditions for Clearing the DTC

DTCs P1B0B and P1B0C are Type B DTCs.

Reference Information

Schematic Reference

Hybrid/EV Controls Schematics on page 9-54

Connector End View Reference

Component Connector End Views on page 11-455

Electrical Information Reference

- *Circuit Testing on page 11-871*
- *Connector Repairs on page 11-895*
- *Testing for Intermittent Conditions and Poor Connections on page 11-877*
- *Wiring Repairs on page 11-883*

DTC Type Reference

Powertrain Diagnostic Trouble Code (DTC) Type Definitions on page 6-92

Scan Tool Reference

Control Module References on page 6-3 for scan tool information

Circuit/System Verification

1. Vehicle ON.
2. Verify DTC P1BOB or P1B0C is not set.

⇒ **If any of the DTCs are set**

Refer to *Loss of Isolation on the High Voltage Main Bus on page 9-430*.

⇓ **If none of the DTCs are set**

3. All OK

Repair Instructions

Perform the *Diagnostic Repair Verification on page 6-123* after completing the repair.

DTC P1B0D

Diagnostic Instructions

- Perform the *Diagnostic System Check - Vehicle on page 6-91* prior to using this diagnostic procedure.
- Review *Strategy Based Diagnosis on page 6-83* for an overview of the diagnostic approach.
- *Diagnostic Procedure Instructions on page 6-84* provides an overview of each diagnostic category.

DTC Descriptors

DTC P1B0D: Drive Motor 1 Control Module Drive Motor 1 Overspeed

Circuit/System Description

The drive motor position sensor is monitored by the drive motor control module. The drive motor control module monitors the angular position, speed and direction of the drive motor based upon the signals of the resolver-type position sensor. The position sensor allows the drive motor control module to determine the exact position, speed and direction of the drive motor. The control modules listed below are part of the power inverter module and are not serviced separately:

- Hybrid/EV powertrain control module 1
- Drive motor control module
- Auxiliary transmission fluid pump control module

Conditions for Running the DTC

- Vehicle is ON.
- Drive motor control module temperature and voltage out of range DTCs have not set.

Conditions for Setting the DTC

Drive motor 1 speed is greater than 5,800 RPM.

Action Taken When the DTC Sets

DTC P1B0D is a Type A DTC.

Conditions for Clearing the DTC

DTC P1B0D is a Type A DTC.

Reference Information

DTC Type Reference

Powertrain Diagnostic Trouble Code (DTC) Type Definitions on page 6-92

Circuit/System Verification

1. Vehicle ON.
2. Verify no other Hybrid Transmission DTCs are set.

⇒ **If other Hybrid Transmission DTCs are set**

Refer to *Diagnostic Trouble Code (DTC) List - Vehicle on page 6-92*.

⇓ **If no other Hybrid Transmission DTCs are set**

3. Verify DTC P1B0D is not set.

⇒ **If any of the DTCs are set**

3.1. Operate the vehicle within the Conditions for Running the DTC. You may also operate the vehicle within the conditions that you observed from the Freeze Frame/Failure Records data.

3.2. Verify the DTC does not set.

⇒ If the DTC sets, replace the T6 Power Inverter Module.

⇓ If the DTC does not set.

3.3. All OK

⇓ **If none of the DTCs are set**

4. All OK

Repair Instructions

Perform the *Diagnostic Repair Verification on page 6-123* after completing the repair.

Control Module References on page 6-3 for T6 Power Inverter Module, often referred to as the Drive Motor Generator Power Inverter Module, replacement, programming, and setup

DTC P1B0F

Diagnostic Instructions

- Perform the *Diagnostic System Check - Vehicle on page 6-91* prior to using this diagnostic procedure.
- Review *Strategy Based Diagnosis on page 6-83* for an overview of the diagnostic approach.
- *Diagnostic Procedure Instructions on page 6-84* provides an overview of each diagnostic category.

DTC Descriptors

DTC P1B0F: Drive Motor Position Learn Incorrect

Circuit/System Description

The drive motor position sensor is monitored by the drive motor control module. The drive motor control module monitors the angular position, speed and direction of the drive motor generator rotor based upon the signals of the resolver-type position sensor. The position sensor contains a drive coil, two driven coils and an irregular shaped metallic rotor. The metallic rotor is mechanically attached to the shaft of the drive motor generator. At vehicle ON, the motor control module outputs a 7 volt ac, 12 kHz excitation signal to the drive coil. The drive coil excitation signal creates a magnetic field surrounding the two driven coils and the irregular shaped rotor. The motor control module then monitors the two driven coil circuits for a return signal. The position of the irregular metallic rotor causes the magnetically-induced return signals of the driven coils to vary in size and shape. A comparison of the two driven coils signals allows the motor control module to determine the exact position, speed and direction of the drive motor rotor. The position sensor is a non-serviceable part of the drive motor.

A measurement called offset is needed for accurate determination of the motor position. Offset is the relationship between the position sensor and the drive motor generator output shaft. Whenever the vehicle is cycled to OFF, the motor control module attempts to learn the offset of the drive motor position sensor by rapidly oscillating the motor and observing the position sensor signals.

Conditions for Running the DTC

Condition 1, 2, 3 and 4

- Vehicle power mode transition from ON to OFF.
- The motor control module has learned a valid drive motor position sensor offset value at least once.

Condition 2

Motor speed is less than 20 RPM.

Conditions for Setting the DTC

- Position sensor offset value not learned because drive motor speed is greater than 50 RPM.
- Position sensor offset value not learned because hybrid battery voltage as observed at the motor control module is less than 192 V.
- Position sensor offset value not learned because drive motor phase to phase current difference is less than 15 A.

Action Taken When the DTC Sets

- DTC P1B0F is a Type B DTC.
- The motor control module operates the drive motor generator using the last valid learned offset.

Conditions for Clearing the DTC

DTC P1B0F is a Type B DTC.

Diagnostic Aids

- If the vehicle is powered off while driving, this DTC may set.
- The drive motor position sensor circuits operate at very low current. These circuits are susceptible to moisture intrusion, corrosion, and terminal damage. Extreme care must be taken when probing terminals and manipulating harnesses. Poor terminal connections can result in intermittent operation.
- If the customer comments that the problem occurs only during moist environmental conditions: rain, snow, vehicle wash, etc., inspect the sensor wiring for signs of water intrusion.
- The sensor circuit loops are a twisted pair with each pair covered in a foil shield. The shield circuits outside of the transmission are grounded to a stud on the power inverter module.
- The drive motor position sensor harness circuits are shielded. Improperly grounded shield circuits may cause inaccurate sensor signals.
- Intermittent appearance of DTC P0A3F, P0A40, P0C52, P0C53, P0C5C, P0C5D, or P1B03 suggests intermittent position sensor circuit or connector problems.
- Drive motor control module monitors and reports the Drive Motor Position Sensor Offset Learn Status. This information can be observed using a scan tool. Status is updated during the transition from vehicle ON to vehicle OFF during normal

conditions. Alternating, and possibly intermittent, appearance of "Not Run," "Learn Failed Motor Speed Not Zero," and "Motor Current Incorrect" suggests intermittent position sensor circuit or connector problems.

- Intermittent appearance of "Motor Current Incorrect" suggests loose 3-phase cable assembly connections at the power inverter module or drive motor.

Drive Motor Position Sensor Offset Learn Status Descriptions

Drive Motor Position Sensor Offset Learn Status	Description	May Be Caused By
Not Run	Not run yet, waiting for key off	NA
	Aborted run due to detecting high voltage too low or motor speed too high	Key off while rolling, drive motor position sensor circuit problems, or high voltage system problems
	Ran but failed due to out of range values	Resolver or drive motor problems
Learn Successful	Position offset learned and stored successfully	NA
Learn Failed Motor Speed Not Zero	Speed high during offset learn but not before	Drive motor position sensor circuit problems
Learn Failed – High Voltage Too Low	High voltage contactors opened during offset learn	High voltage system problems
Motor Current Incorrect	Low current on 3-phase circuits between power inverter module and drive motor	Drive motor, power inverter module, or 3-phase cable assembly problem

Reference Information

Scan Tool Reference

Control Module References on page 6-3 for scan tool information

Circuit/System Verification

1. Vehicle ON.
2. Verify that DTCs P0A3F, P0A40, P0A78, P0C01, P0C0B, P0C4E, P0C52, P0C53, P1B03, or P1B0D is not set.

⇒ **If any of the DTCs are set**

Refer to *Diagnostic Trouble Code (DTC) List - Vehicle on page 6-92*.

⇓ **If none of the DTCs are set**

Note: When turning vehicle OFF, open and close the driver door and wait 1 minute to allow all modules to shut down.

3. Cycle vehicle power 4 times, using a scan tool to monitor the state of the appropriate Drive Motor Position Sensor Offset Learn Status.

⇒ **If Drive Motor Position Sensor Offset Learn Status showed Motor Current Incorrect all 4 cycles**

Refer to 3-Phase Circuit Malfunction.

⇓ **If Drive Motor Position Sensor Offset Learn Status did not show Motor Current Incorrect all 4 cycles**

4. Vehicle ON.
5. Verify DTC P0C17, P0C18, P1B0F, or P1B10 is not set.

⇒ **If any of the DTCs are set**

5.1. Program the T6 Power Inverter Module.

5.2. Verify the DTC does not set.

⇒ If the DTC sets, replace the T6 Power Inverter Module.

⇓ If the DTC does not set

6. All OK.

⇓ **If none of the DTCs are set**

7. All OK.

Circuit/System Testing

Note: You must perform the Circuit/System Verification before proceeding with Circuit/System Testing.

3-Phase Circuit Malfunction

Danger: Always perform the High Voltage Disabling procedure prior to servicing any High Voltage component or connection. Personal Protection Equipment (PPE) and proper procedures must be followed.

The High Voltage Disabling procedure will perform the following tasks:

- ***Identify how to disable high voltage.***
- ***Identify how to test for the presence of high voltage.***
- ***Identify condition under which high voltage is always present and personal protection equipment (PPE) and proper procedures must be followed.***

Failure to follow the procedures exactly as written may result in serious injury or death.

1. Perform the *High Voltage Disabling on page 9-363* procedure for servicing the T6 Power Inverter Module or T12 Transmission.
2. Remove the 3-phase cable assembly from the T6 Power Inverter Module. Refer to *Drive Motor Generator Power Inverter Module Replacement on page 9-184*.
3. Test for infinite resistance between each of the AC circuit terminals listed below and ground for each phase of the appropriate M15 Drive Motor:

   Drive Motor 1
   - X5 terminal 3 phase U
   - X5 terminal 2 phase V
   - X5 terminal 1 phase W

   Drive Motor 2
   - X6 terminal 3 phase U
   - X6 terminal 2 phase V
   - X6 terminal 1 phase W

⇒ **If less than infinite resistance**

4. Disconnect the appropriate 3-phase cable assembly from the transmission. Refer to Generator Rotor and Stator Removal - Unit A for drive motor 1 or Drive Motor Generator Rotor, Stator, and Output Sun Gear Shaft Removal - Unit B for drive motor 2.
5. Test for infinite resistance between the AC circuit terminal and ground and between the AC circuit terminal and the aluminum cable mounting block.
   ⇒ If less than infinite resistance, replace the 3-phase cable assembly.
   ⇓ If infinite resistance, replace the M15 Drive Motor.

⇓ **If infinite resistance for all AC circuits**

6. Verify the DTC does not set.

⇒ **If the DTC sets**

7. Perform each of the operations listed below one at a time until the fault is corrected.
   7.1. Program the T6 Power Inverter Module.
   7.2. Replace the T6 Power Inverter Module.
   7.3. Replace the M15 Drive Motor.
8. Operate the vehicle within the Conditions for Running the DTC. You may also operate the vehicle within the conditions that you observed from the Freeze Frame/Failure Records data.
9. Repeat the DTC check.

⇓ **If the DTC does not set**

10. All OK.

Repair Instructions

Perform the *Diagnostic Repair Verification on page 6-123* after completing the diagnostic procedure.

- *Drive Motor Replacement on page 16-45* for Drive Motor replacement
- *Control Module References on page 6-3* for Drive Motor Generator Power Inverter Module, also called the power inverter module, replacement, programming, and setup.

DTC P1B15

Diagnostic Instructions

- Perform the *Diagnostic System Check - Vehicle on page 6-91* prior to using this diagnostic procedure.
- Review *Strategy Based Diagnosis on page 6-83* for an overview of the diagnostic approach.
- *Diagnostic Procedure Instructions on page 6-84* provides an overview of each diagnostic category.

DTC Descriptor

DTC P1B15: Regenerative Braking Torque Request Signal Message Counter Incorrect

Circuit/System Description

This diagnostic applies to internal microprocessor integrity conditions within the hybrid powertrain control module 1. The hybrid powertrain control module 1 is internal to the power inverter module, often referred to as the drive motor generator power inverter module, and is not serviced separately. The hybrid powertrain control module 1 monitors its ability to read and write to the memory. The hybrid powertrain control module 1 processor monitors the data to verify that the indicated brake torque request calculation is correct. The control modules listed below are part of the power inverter module and are not serviced separately:

- Hybrid/EV powertrain control module 1
- Drive motor control module
- Auxiliary transmission fluid pump control module

Conditions for Running the DTC

- The vehicle is ON for 0.5 seconds.
- The system voltage is above 9.5 V.

Conditions for Setting the DTC

The control module has detected an internal malfunction or the Electronic Brake Control Module has an internal malfunction.

Action Taken When the DTC Sets

- P1B15 is a Type A DTC.
- Regenerative Braking is not allowed.

Conditions for Clearing the DTC

P1B15 is a Type A DTC.

Reference Information

DTC Type Reference

Powertrain Diagnostic Trouble Code (DTC) Type Definitions on page 6-92

Circuit/System Verification

1. Vehicle ON.
2. Verify DTC P1B15 is not set.

⇒ **If the DTC sets**

Replace the T6 Power Inverter Module.

⇓ **If the DTC does not set**

3. All OK.

Repair Instructions

Perform the *Diagnostic Repair Verification on page 6-123* after completing the repair.

Control Module References on page 6-3 for T6 Power Inverter Module, also called the Drive Motor Generator Power Inverter Module, replacement, programming, and setup.

DTC P1B41

Diagnostic Instructions

- Perform the *Diagnostic System Check - Vehicle on page 6-91* prior to using this diagnostic procedure.
- Review *Strategy Based Diagnosis on page 6-83* for an overview of the diagnostic approach.
- *Diagnostic Procedure Instructions on page 6-84* provides an overview of each diagnostic category.

DTC Descriptors

DTC P1B41: Drive Motor 1 Control Module Hybrid/EV Battery Voltage Isolation Sensing Performance

Circuit/System Description

The power inverter module, often referred to as the drive motor generator power inverter module, contains two motor control modules and the hybrid/EV powertrain control module 1. One of the motor control modules operates the drive motor based upon power inverter module commands. The other motor control module controls the auxiliary transmission fluid pump. The hybrid/EV powertrain control module 1 and the motor control modules share the power inverter module ignition voltage circuit, battery voltage circuits and chassis ground. The motor control modules and the hybrid/EV powertrain control module 1 are part of the power inverter module and are not serviced separately.

Conditions for Running the DTC

- DTC P1AE8, P1AE9, P1B0B, P1B0C, P1AEC, P1AF5, or P1AF4 is not set.
- The vehicle is ON.

Conditions for Setting the DTC

The difference between the voltage sensed and hybrid battery voltage is greater than 40V.

And

The difference between the voltage sensed and the high voltage measured is greater than 50V.

Action Taken When the DTC Sets

- DTC P1B41 is a Type B DTC.
- The hybrid/EV powertrain control module 1 requests the hybrid/EV powertrain control module 2 to open the high voltage contactor relays.

Conditions for Clearing the DTC

DTC P1B41 is a Type B DTC.

Reference Information

DTC Type Reference

Powertrain Diagnostic Trouble Code (DTC) Type Definitions on page 6-92

Circuit/System Verification

1. Vehicle ON.
2. Verify DTC P1B41 is not set.

⇒ **If any of the DTCs are set**

⇒ If the DTC sets, replace the T6 Power Inverter Module.

⇓ If the DTC does not set.

3. All OK.

⇓ **If none of the DTCs are set**

4. All OK.

Repair Instructions

Perform the *Diagnostic Repair Verification on page 6-123* after completing the repair.

Control Module References on page 6-3 for T6 Power Inverter Module, often referred to as the Drive Motor Generator Power Inverter Module, replacement, programming, and setup.

DTC P1BFF, P1E23-P1E25, or P1EB8

Diagnostic Instructions

- Perform the *Diagnostic System Check - Vehicle on page 6-91* prior to using this diagnostic procedure.
- Review *Strategy Based Diagnosis on page 6-83* for an overview of the diagnostic approach.
- *Diagnostic Procedure Instructions on page 6-84* provides an overview of each diagnostic category.

DTC Descriptors

DTC P1BFF: Auxiliary Transmission Fluid Pump Control Module Not Programmed
DTC P1E23: Auxiliary Transmission Fluid Pump Control Module Random Access Memory
DTC P1E24: Auxiliary Transmission Fluid Pump Control Module Long Term Memory Performance
DTC P1E25: Auxiliary Transmission Fluid Pump Control Module Read Only Memory
DTC P1EB8: Auxiliary Transmission Fluid Pump Control Module Long Term Memory Reset

Circuit/System Description

This is an internal fault detection of the auxiliary transmission fluid pump control module. The auxiliary transmission fluid pump control module is internal to the power inverter module, often referred to as the drive motor generator power inverter module, and is not serviced separately. These faults are handled inside the power inverter module, and no external circuits are involved.

Conditions for Running the DTC

- The vehicle is ON.
- The system voltage is greater than 9.5 V.

Conditions for Setting the DTC

The control module has detected an internal malfunction, or a service module has been installed but not yet programmed.

Action Taken When the DTC Sets

- P1BFF, P1E23, and P1E25, and P1EB8 are Type A DTCs.
- P1E24 is a Type B DTC.
- When the DTC P1E23 or P1E25 sets, the hybrid/EV powertrain control module 1 requests the hybrid/EV powertrain control module 2 to open the high voltage contactor relays.

Conditions for Clearing the DTC

- P1BFF, P1E23, and P1E25, and P1EB8 are Type A DTCs.
- P1E24 is a Type B DTC.

Reference Information

DTC Type Reference

Powertrain Diagnostic Trouble Code (DTC) Type Definitions on page 6-92

Circuit/System Verification

1. Vehicle ON.
2. Verify DTC P0562 is not set.

⇒ **If the DTC is set**

Refer to *DTC B1325, B1330, B1517, C0800, C0899, C0900, C12E1, C12E2, P0561-P0563, P1A0C, P1A0D, or P1EFC on page 9-9*.

⇓ **If the DTC is not set**

3. Verify DTC P1BFF is not set.

⇒ **If the DTC is set**

3.1. Program the T6 Power Inverter Module.
3.2. Verify the DTC does not set.

⇒ If the DTC is set, replace the T6 Power Inverter Module.

⇓ If the DTC does not set.

3.3. All OK.

4. Verify DTC P1E23, P1E24, P1E25, or P1EB8 is not set.

⇒ If the DTC is set, replace the T6 Power Inverter Module.

⇓ If the DTC does not set.

5. All OK.

Repair Instructions

Perform the *Diagnostic Repair Verification on page 6-123* after completing the repair.

Control Module References on page 6-3 for T6 Power Inverter Module, often referred to as the Drive Motor Generator Power Inverter Module, replacement, programming, and setup.

DTC P1E00

Diagnostic Instructions

- Perform the *Diagnostic System Check - Vehicle on page 6-91* prior to using this diagnostic procedure.
- Review *Strategy Based Diagnosis on page 6-83* for an overview of the diagnostic approach.
- *Diagnostic Procedure Instructions on page 6-84* provides an overview of each diagnostic category.

DTC Descriptor

DTC P1E00: Hybrid/EV Powertrain Control Module 2 Requested MIL Illumination

Circuit/System Description

This DTC indicates the hybrid/EV powertrain control module 2 has set a DTC. The hybrid/EV powertrain control module 2 sends a message via the serial data circuit to the ECM requesting illumination of the MIL. When the ECM receives the message, DTC P1E00 will set. The DTC information for the ECM will only display DTC P1E00, but the freeze frame/failure records data will display the hybrid/EV powertrain control module 2 DTC that is set.

Conditions for Running the DTC

- Vehicle ON for greater than 3 s.
- This DTC runs continuously when the above condition is met.

Conditions for Setting the DTC

The hybrid/EV powertrain control module 2 has set a DTC.

Action Taken When the DTC Sets

DTC P1E00 is a Type A DTC.

Conditions for Clearing the DTC

DTC P1E00 is a Type A DTC.

Reference Information

Description and Operation

Hybrid/EV Modes of Operation Description

DTC Type Reference

Powertrain Diagnostic Trouble Code (DTC) Type Definitions on page 6-92

Scan Tool Reference

Control Module References on page 6-3 for scan tool information.

Circuit/System Verification

Note: DTC P1E00 is an informational DTC indicating a DTC is set in the hybrid/EV powertrain control module 2; do not replace the ECM for this DTC.

1. Vehicle ON.
2. Verify DTC P1E00 is not set.

⇒ **If the DTC is set**

Refer to *Diagnostic Trouble Code (DTC) List - Vehicle on page 6-92* for diagnosis of hybrid/EV powertrain control module 2 DTCs.

⇓ **If the DTC is not set**

3. All OK.

Repair Instructions

Perform the *Diagnostic Repair Verification on page 6-123* after completing the repair.

DTC P1E0A

Diagnostic Instructions

- Perform the *Diagnostic System Check - Vehicle on page 6-91* prior to using this diagnostic procedure.
- Review *Strategy Based Diagnosis on page 6-83* for an overview of the diagnostic approach.
- *Diagnostic Procedure Instructions on page 6-84* provides an overview of each diagnostic category.

DTC Descriptors

DTC P1E0A: Drive Motor Control Module Torque Calculation Performance

Circuit/System Description

The motor control module performs redundant calculations of desired and achieved torque values. These values are continuously compared and should always be the same. The control modules listed below are part of the power inverter module and are not serviced separately:

- Hybrid/EV powertrain control module 1
- Drive motor control module
- Auxiliary transmission fluid pump control module

Conditions for Running the DTC

The vehicle is in RUN.

Conditions for Setting the DTC

The redundant torque calculation does not match the primary calculation.

Action Taken When the DTC Sets

P1E0A is a Type A DTC.

Conditions for Clearing the DTC

P1E0A is a Type A DTC.

Reference Information

DTC Type Reference

Powertrain Diagnostic Trouble Code (DTC) Type Definitions on page 6-92

Circuit/System Verification

1. Vehicle ON.
2. Verify no transmission or motor control module DTCs are set.

⇒ **If any of the DTCs are set**

Refer to *Diagnostic Trouble Code (DTC) List - Vehicle on page 6-92*.

⇓ **If none of the DTCs are set**

3. Verify DTC P1E0A is not set.

⇒ **If any of the DTCs are set**

3.1. Operate the vehicle within the Conditions for Running the DTC. You may also operate the vehicle within the conditions that you observed from the Freeze Frame/Failure Records data.

3.2. Verify the DTC does not set.

⇒ If the DTC sets, replace the T6 Power Inverter Module.

⇓ If the DTC does not set.

3.3. All OK.

⇓ **If none of the DTCs are set**

4. All OK.

Repair Instructions

Perform the *Diagnostic Repair Verification on page 6-123* after completing the repair.

Control Module References on page 6-3 for T6 Power Inverter Module, often referred to as the Drive Motor Generator Power Inverter Module, replacement, programming, and setup.

DTC P1E19 or P1E1A

Diagnostic Instructions

- Perform the *Diagnostic System Check - Vehicle on page 6-91* prior to using this diagnostic procedure.
- Review *Strategy Based Diagnosis on page 6-83* for an overview of the diagnostic approach.
- *Diagnostic Procedure Instructions on page 6-84* provides an overview of each diagnostic category.

DTC Descriptors

DTC P1E19: Auxiliary Transmission Fluid Pump Control Module System Voltage Low Voltage

DTC P1E1A: Auxiliary Transmission Fluid Pump Control Module System Voltage High Voltage

Circuit/System Description

The power inverter module, often referred to as the drive motor generator power inverter module, contains two motor control modules and the hybrid/EV powertrain control module 1. One of the motor control modules operate the drive motor based upon power inverter module commands. The other motor control module controls the auxiliary transmission fluid pump. The hybrid/EV powertrain control module 1 and the motor control modules share the power inverter module ignition voltage circuit, battery voltage circuits and chassis ground. The motor control modules and the hybrid/EV powertrain control module 1 are part of the power inverter module and are not serviced separately.

Conditions for Running the DTC

The vehicle is in RUN.

Conditions for Setting the DTC

DTC P1E19

System voltage is less than or equal to 10 V for 5 seconds.

DTC P1E1A

System voltage is greater than or equal to 18 V for 5 seconds.

Action Taken When the DTC Sets

DTCs P1E19 and P1E1A are Type C DTCs.

Conditions for Clearing the DTC

DTCs P1E19 and P1E1A are Type C DTCs.

Diagnostic Aids

A 14 V battery charger or vehicle jump start may have set DTC P1E1A.

Reference Information

DTC Type Reference

Powertrain Diagnostic Trouble Code (DTC) Type Definitions on page 6-92

Circuit/System Verification

1. Vehicle ON.
2. Verify DTC P0562 or P0563 is not set.

⇒ **If any of the DTCs are set**

Refer to *DTC B1325, B1330, B1517, C0800, C0899, C0900, C12E1, C12E2, P0561-P0563, P1A0C, P1A0D, or P1EFC on page 9-9*.

⇓ **If none of the DTCs are set**

3. Verify DTC P1E19 or P1E1A is not set.

⇒ **If any of the DTCs are set**

4. Verify the DTC does not set.

   If the DTC sets, replace the T6 Power Inverter Module.

⇓ **If the DTC does not set**

5. All OK.

Repair Instructions

Perform the *Diagnostic Repair Verification on page 6-123* after completing the repair.

Control Module References on page 6-3 for T6 Power Inverter Module, often referred to as the Drive Motor Generator Power Inverter Module, replacement, programming, and setup.

DTC P1E1B-P1E1F

Diagnostic Instructions

- Perform the *Diagnostic System Check - Vehicle on page 6-91* prior to using this diagnostic procedure.
- Review *Strategy Based Diagnosis on page 6-83* for an overview of the diagnostic approach.
- *Diagnostic Procedure Instructions on page 6-84* provides an overview of each diagnostic category.

DTC Descriptors

DTC P1E1B: Auxiliary Transmission Fluid Pump Control Module Hybrid/EV Battery Voltage Isolation Sensing Performance

DTC P1E1C: Auxiliary Transmission Fluid Pump Control Module Hybrid/EV Battery Voltage Isolation Sensing Circuit 1 Low Voltage

DTC P1E1D: Auxiliary Transmission Fluid Pump Control Module Hybrid/EV Battery Voltage Isolation Sensing Circuit 1 High Voltage

DTC P1E1E: Auxiliary Transmission Fluid Pump Control Module Hybrid/EV Battery Voltage Isolation Sensing Circuit 2 Low Voltage

DTC P1E1F: Auxiliary Transmission Fluid Pump Control Module Hybrid/EV Battery Voltage Isolation Sensing Circuit 2 High Voltage

Circuit/System Description

The power inverter module, often referred to as the drive motor generator power inverter module, contains two motor control modules and the hybrid/EV powertrain control module 1. One of the motor control modules operates the drive motor based upon power inverter module commands. The other motor control module controls the auxiliary transmission fluid pump. The motor control modules and the hybrid/EV powertrain control module 1 are part of the power inverter module and are not serviced separately.

The motor control modules measure hybrid/EV battery high voltage with several internal sensors. The motor control modules test for loss of isolation between each high voltage and vehicle chassis. The motor control modules test for isolation when the high voltage contactor relays are closed. The hybrid/EV powertrain control module 2 only tests the hybrid/EV battery assembly for high voltage loss of isolation when the high voltage contactor relays are open.

Conditions for Running the DTC

- DTCs P1E20, P1E21, P1E1E, or P1E1F are not set.
- The vehicle is ON.
- The system voltage is at least 6 V.

Conditions for Setting the DTC

P1E1B

The motor control module detects a correlation difference between the mid pack isolation sensor and overall pack voltage.

P1E1C and P1E1E

The motor control module detects isolation sensor voltage less than 20 V.

P1E1D and P1E1F

The motor control module detects isolation sensor voltage greater than 40 V.

Action Taken When the DTC Sets

P1E1B, P1E1C, P1E1D, P1E1E, and P1E1F are Type B DTCs.

Conditions for Clearing the DTC

P1E1B, P1E1C, P1E1D, P1E1E, and P1E1F are Type B DTCs.

Reference Information

Electrical Information Reference

- *Circuit Testing on page 11-871*
- *Connector Repairs on page 11-895*
- *Testing for Intermittent Conditions and Poor Connections on page 11-877*
- *Wiring Repairs on page 11-883*

DTC Type Reference

Powertrain Diagnostic Trouble Code (DTC) Type Definitions on page 6-92

Circuit/System Verification

1. Vehicle ON.
2. Verify DTC P1E1B, P1E1C, P1E1D, P1E1E, or P1E1F is not set.

⇒ **If any of the DTCs are set**

2.1. Verify the DTC does not set.

⇒ If the DTC sets, replace the T6 Power Inverter Module.

⇓ If the DTC does not set.

2.2. All OK.

⇓ **If none of the DTCs are set**

3. All OK.

Repair Instructions

Perform the *Diagnostic Repair Verification on page 6-123* after completing the repair.

Control Module References on page 6-3 for T6 Power Inverter Module, often referred to as the Drive Motor Generator Power Inverter Module, replacement, programming, and setup.

DTC P1E20-P1E22

Diagnostic Instructions

- Perform the *Diagnostic System Check - Vehicle on page 6-91* prior to using this diagnostic procedure.
- Review *Strategy Based Diagnosis on page 6-83* for an overview of the diagnostic approach.
- *Diagnostic Procedure Instructions on page 6-84* provides an overview of each diagnostic category.

DTC Descriptors

DTC P1E20: Auxiliary Transmission Fluid Pump Control Module Hybrid/EV Battery Voltage Sense Circuit Low Voltage

DTC P1E21: Auxiliary Transmission Fluid Pump Control Module Hybrid/EV Battery Voltage Sense Circuit High Voltage

DTC P1E22: Auxiliary Transmission Fluid Pump Control Module Hybrid/EV Battery Voltage System Isolation Lost

Circuit/System Description

The power inverter module, often referred to as the drive motor generator power inverter module, contains two motor control modules and the hybrid/EV powertrain control module 1. One of the motor control modules operate the drive motor based upon power inverter module commands. The other motor control module controls the auxiliary transmission fluid pump. Each drive motor control module monitors its internal high voltage sensor for correct operation; no external circuits are involved. The motor control modules and the hybrid/EV powertrain control module 1 are part of the power inverter module and are not serviced separately.

Conditions for Running the DTC

- The vehicle is ON.
- The system voltage is 8–18 V.
- The high voltage contactor relays are closed.

Conditions for Setting the DTC

P1E20

The drive motor control module detects high voltage sensor voltage less than 30 V.

P1E21

The drive motor control module detects high voltage sensor voltage greater than 500 V.

P1E22

The drive motor control module detects an isolation fault between the battery pack and chassis ground.

Action Taken When the DTC Sets

- P1E21 is a Type A DTC.
- P1E20 and P1E22 are Type B DTCs.

Conditions for Clearing the DTC

- P1E21 is a Type A DTC.
- P1E20 and P1E22 are Type B DTCs.

Reference Information

DTC Type Reference

Powertrain Diagnostic Trouble Code (DTC) Type Definitions on page 6-92

Circuit/System Verification

P1E20 or P1E21

1. Vehicle ON.
2. Verify DTC P1E20 or P1E21 is not set.

⇒ **If any of the DTCs are set**

2.1. Verify the DTC does not set.

⇒ If the DTC sets, replace the T6 Power Inverter Module.

⇓ If the DTC does not set.

2.2. All OK.

⇓ **If none of the DTCs are set**

3. All OK.

P1E22

1. Vehicle ON.
2. Verify DTC P1E22 is not set.

⇒ **If the DTC is set**

Refer to *Loss of Isolation on the High Voltage Main Bus on page 9-430*.

⇓ **If the DTC is not set**

3. All OK.

Repair Instructions

Perform the *Diagnostic Repair Verification on page 6-123* after completing the repair.

Control Module References on page 6-3 for T6 Power Inverter Module, often referred to as the Drive Motor Generator Power Inverter Module, also called the power inverter module, replacement, programming, and setup.

DTC P1E27 or P1E28

Diagnostic Instructions

- Perform the *Diagnostic System Check - Vehicle on page 6-91* prior to using this diagnostic procedure.
- Review *Strategy Based Diagnosis on page 6-83* for an overview of the diagnostic approach.
- *Diagnostic Procedure Instructions on page 6-84* provides an overview of each diagnostic category.

DTC Descriptors

DTC P1E27: Auxiliary Transmission Fluid Pump Control Module Hybrid/EV Battery System Voltage High Voltage
DTC P1E28: Auxiliary Transmission Fluid Pump Control Module Hybrid/EV Battery System Voltage

Circuit/System Description

The power inverter module, often referred to as the drive motor generator power inverter module, contains two motor control modules and the hybrid/EV powertrain control module 1. One of the motor control modules operate the drive motor based upon power inverter module commands. The other motor control module controls the auxiliary transmission fluid pump. Each drive motor control module monitors its internal high voltage sensor for correct operation; no external circuits are involved. The motor control modules and the hybrid/EV powertrain control module 1 are part of the power inverter module and are not serviced separately.

Conditions for Running the DTC

DTC P1E27

- The vehicle is ON.
- High voltage contactors are closed.

DTC P1E28

- The vehicle is ON.
- High voltage contactors are closed.
- DTC P1E20 or P1E21 is not set.

Conditions for Setting the DTC

DTC P1E27

The motor control module detects High Voltage greater than 443 V.

DTC P1E28

The motor control module detects a correlation fault while comparing the mid pack and overall pack voltage.

Action Taken When the DTC Sets

- DTC P1E27 is a Type A DTC.
- DTC P1E28 is a Type B DTC.

Conditions for Clearing the DTC

- DTC P1E27 is a Type A DTC.
- DTC P1E28 is a Type B DTC.

Diagnostic Aids

This DTC may set due to low 12 V system voltage.

Reference Information

DTC Type Reference

Powertrain Diagnostic Trouble Code (DTC) Type Definitions on page 6-92

Circuit/System Verification

1. Vehicle ON.
2. Verify DTC P0562 is not set.

⇒ **If the DTC is set**

Refer to *DTC B1325, B1330, B1517, C0800, C0899, C0900, C12E1, C12E2, P0561-P0563, P1A0C, P1A0D, or P1EFC on page 9-9*.

⇓ **If the DTC is not set**

3. Verify DTC P1E27 or P1E28 is not set.

⇒ **If any of the DTCs are set**

4. Verify the DTC does not set. If the DTC sets, replace the T6 Power Inverter Module.

⇓ **If the DTC is not set**

5. All OK.

Repair Instructions

Perform the *Diagnostic Repair Verification on page 6-123* after completing the repair.

Control Module References on page 6-3 for T6 Power Inverter Module, often referred to as the Drive Motor Generator Power Inverter Module, replacement, programming, and setup.

DTC P1E29

Diagnostic Instructions

- Perform the *Diagnostic System Check - Vehicle on page 6-91* prior to using this diagnostic procedure.
- Review *Strategy Based Diagnosis on page 6-83* for an overview of the diagnostic approach.
- *Diagnostic Procedure Instructions on page 6-84* provides an overview of each diagnostic category.

DTC Descriptor

DTC P1E29: Auxiliary Transmission Fluid Pump Control Module Calculated Motor Position Performance

Circuit/System Description

The power inverter module, often referred to as the drive motor generator power inverter module, contains two motor control modules and the hybrid/EV powertrain control module 1. One of the motor control modules operates the drive motor based upon hybrid/EV powertrain control module 1 commands. The other motor control module controls the auxiliary transmission fluid pump. The hybrid/EV powertrain control module 1 and the motor control modules share the power inverter module ignition voltage circuit, battery voltage circuits and chassis ground. The motor control modules and the hybrid/EV powertrain control module 1 are part of the power inverter module and are not serviced separately.

The auxiliary transmission fluid pump control module uses sensorless control to estimate motor speed and position from the phase current sensors.

Conditions for Running the DTC

The vehicle is ON or the power inverter module is awake.

Conditions for Setting the DTC

The auxiliary transmission fluid pump control module detects a fault.

Action Taken When the DTC Sets

DTC P1E29 is a Type A DTC.

Conditions for Clearing the DTC

DTC P1E29 is a Type A DTC.

Reference Information

DTC Type Reference

Powertrain Diagnostic Trouble Code (DTC) Type Definitions on page 6-92

Circuit/System Verification

1. Vehicle ON.
2. Verify DTC P179A, P1E20, P1E21, P1E22, P1E27, P1E28, P1E1C, P1E1D, P1E1E, P1E1F, P1E1B, P1E29, P1E34, P1E35, or P1E36 is not set.

⇒ **If any of the DTCs are set**

Refer to *Diagnostic Trouble Code (DTC) List - Vehicle on page 6-92*.

⇓ **If none of the DTCs are set**

3. Verify DTC P1E29 is not set.

⇒ **If the DTC is set**

4. Verify the DTC does not set. If the DTC sets, replace the T6 Power Inverter Module.

⇓ **If the DTC is not set**

5. All OK.

Repair Instructions

Perform the *Diagnostic Repair Verification on page 6-123* after completing the repair.

Control Module References on page 6-3 for T6 Power Inverter Module, often referred to as the Drive Motor Generator Power Inverter Module, replacement, programming, and setup.

DTC P1E2A-P1E2F

Diagnostic Instructions

- Perform the *Diagnostic System Check - Vehicle on page 6-91* prior to using this diagnostic procedure.
- Review *Strategy Based Diagnosis on page 6-83* for an overview of the diagnostic approach.
- *Diagnostic Procedure Instructions on page 6-84* provides an overview of each diagnostic category.

DTC Descriptors

DTC P1E2A: Auxiliary Transmission Fluid Pump Phase U Current Sensor Circuit Low Voltage
DTC P1E2B: Auxiliary Transmission Fluid Pump Phase U Current Sensor Circuit High Voltage
DTC P1E2C: Auxiliary Transmission Fluid Pump Phase U Current Sensor Performance
DTC P1E2D: Auxiliary Transmission Fluid Pump Phase V Current Sensor Circuit Low Voltage
DTC P1E2E: Auxiliary Transmission Fluid Pump Phase V Current Sensor Circuit High Voltage
DTC P1E2F: Auxiliary Transmission Fluid Pump Phase V Current Sensor Performance

Circuit/System Description

The power inverter module, often referred to as the drive motor generator power inverter module, contains two motor control modules and the hybrid/EV powertrain control module 1. One of the motor control modules operates the drive motor generator based upon hybrid/EV powertrain control module 1 commands. The other motor control module controls the auxiliary transmission fluid pump. This is an internal fault detection of the power inverter module. This fault is handled inside the power inverter module and no external circuits are involved.

The auxiliary transmission fluid pump control module operates the pump based upon hybrid/EV powertrain control module 1 commands. The control module controls the pump through the sequencing actuation of high current switching transistors called insulated gate bipolar transistors. The pump motor operates utilizing 3-phase alternating current AC electricity. Each insulated gate bipolar transistor operates a single phase of the pump motor. Each phase is individually identified as U, V, and W. The auxiliary transmission fluid control module monitors the current of each phase in order to detect out of range current conditions.

Because the motor's phase circuits are electrically joined together, the phases normally flow about the same amount of current. The auxiliary transmission fluid control module performs a mathematical calculation to verify that the phase current sensors are accurate. If the U-V-W phase current sensors indicate about the same amount of phase current, the sum of the calculation should be near zero. If the U-V-W phase currents are not similar, this DTC will set.

Conditions for Running the DTC

The vehicle is ON or the module is awake.

Conditions for Setting the DTC

The control module has detected an internal malfunction.

Action Taken When the DTC Sets

- DTCs P1E2A, P1E2B, P1E2C, P1E2D, P1E2E, P1E2F are Type A DTCs.
- The hybrid/EV powertrain control module 1 requests the hybrid/EV powertrain control module 2 to open the high voltage contactor relays.

Conditions for Clearing the DTC

DTCs P1E2A, P1E2B, P1E2C, P1E2D, P1E2E, P1E2F are Type A DTCs.

Reference Information

DTC Type Reference

Powertrain Diagnostic Trouble Code (DTC) Type Definitions on page 6-92

Circuit/System Verification

1. Vehicle ON.
2. Verify DTC P1E2A, P1E2B, P1E2C, P1E2D, P1E2E, P1E2F is not set.

⇒ **If any of the DTCs are set**

2.1. Verify the DTC does not set.

⇒ If the DTC sets, replace the T6 Power Inverter Module.

⇓ If the DTC does not set.

2.2. All OK.

⇓ **If none of the DTCs are set**

3. All OK.

Repair Instructions

Perform the *Diagnostic Repair Verification on page 6-123* after completing the repair.

Control Module References on page 6-3 for T6 Power Inverter Module, often referred to as the Drive Motor Generator Power Inverter Module, replacement, programming, and setup

DTC P1E34-P1E36

Diagnostic Instructions

- Perform the *Diagnostic System Check - Vehicle on page 6-91* prior to using this diagnostic procedure.
- Review *Strategy Based Diagnosis on page 6-83* for an overview of the diagnostic approach.
- *Diagnostic Procedure Instructions on page 6-84* provides an overview of each diagnostic category.

DTC Descriptors

DTC P1E34: Auxiliary Transmission Fluid Pump Inverter Temperature Sensor Circuit High Voltage

DTC P1E35: Auxiliary Transmission Fluid Pump Inverter Temperature Sensor Circuit Low Voltage

DTC P1E36: Auxiliary Transmission Fluid Pump Inverter Temperature Sensor Performance

Circuit/System Description

This is an internal fault detection of the power inverter module, often referred to as the drive motor generator power inverter module. This fault is handled inside the power inverter module, and no external circuits are involved.

Conditions for Running the DTC

P1E34, P1E35

The vehicle is ON or the module is awake.

P1E36

- The vehicle is ON or the module is awake.
- The propulsion system inactive time is greater than 6 hours.
- The thermal conditioning off time is greater than 2 hours.
- The charge off time is greater than 2 hours.
- The cold start average temperature is greater than −20°C (−4°F).
- DTCs P1E34 and P1E35 are not set.

Conditions for Setting the DTC

P1E34

The inverter phase temperature sensor is less than −58°C (−72°F) for 3 seconds. If the fault is detected at the start of a drive cycle the DTC will set after 90 seconds.

P1E35

The inverter phase temperature sensor is greater than 130°C (266°F) for 3 seconds.

P1E36

A 20°C (36°F) difference is observed between the individual inverter phase temperature sensor and the average of the Hybrid Electronics Coolant Temperature and the Transmission Fluid Temperature.

Action Taken When the DTC Sets

DTCs P1E34, P1E35, and P1E36 are Type C DTCs.

Conditions for Clearing the DTC

DTCs P1E34, P1E35, and P1E36 are Type C DTCs.

Reference Information

DTC Type Reference

Powertrain Diagnostic Trouble Code (DTC) Type Definitions on page 6-92

Circuit/System Verification

1. Vehicle ON.
2. Verify DTC P1E34, P1E35, or P1E36 is not set.

⇒ **If any of the DTCs are set**

2.1. Operate the vehicle within the Conditions for Running the DTC. You may also operate the vehicle within the conditions that you observed from the Freeze Frame/Failure Records data.

2.2. Verify the DTC does not set.

⇒ If the DTC sets, replace the T6 Power Inverter Module.

⇓ If the DTC does not set.

2.3. All OK.

⇓ **If none of the DTCs are set**

3. All OK.

Repair Instructions

Perform the *Diagnostic Repair Verification on page 6-123* after completing the repair.

Control Module References on page 6-3 for T6 Power Inverter Module, often referred to as the Drive Motor Generator Power Inverter Module, replacement, programming, and setup

DTC P1E37

Diagnostic Instructions

- Perform the *Diagnostic System Check - Vehicle on page 6-91* prior to using this diagnostic procedure.
- Review *Strategy Based Diagnosis on page 6-83* for an overview of the diagnostic approach.
- *Diagnostic Procedure Instructions on page 6-84* provides an overview of each diagnostic category.

DTC Descriptor

DTC P1E37: Auxiliary Transmission Fluid Pump Inverter High Temperature

Circuit/System Description

The power inverter module, often referred to as the drive motor generator power inverter module, contains two motor control modules and the hybrid/EV powertrain control module 1. One of the motor control modules operates the drive motor based upon the hybrid/EV powertrain control module 1 commands. The other motor control module controls the auxiliary transmission fluid pump. The inverter temperature sensor is part of the power inverter module and is not serviced separately.

The control modules listed below are part of the power inverter module and are not serviced separately:

- Hybrid/EV powertrain control module 1
- Drive motor control module
- Auxiliary transmission fluid pump control module

Conditions for Running the DTC

- The vehicle is ON.
- DTC P1E36 is not set.

Conditions for Setting the DTC

The pump inverter temperature sensor is greater than 94.5°C (202°F).

Action Taken When the DTC Sets

DTC P1E37 is a Type B DTC.

Conditions for Clearing the DTC

DTC P1E37 is a Type B DTC.

Diagnostic Aids

Verify the cooling system is functioning normally.

Reference Information

DTC Type Reference

Powertrain Diagnostic Trouble Code (DTC) Type Definitions on page 6-92

Scan Tool Reference

Control Module References on page 6-3 for scan tool information

Circuit/System Verification

1. Vehicle ON.
2. Verify DTC P1E36 is not set.

⇒ **If the DTC is set**

Refer to *DTC P1E34-P1E36 on page 9-149*.

⇓ **If the DTC is not set**

3. Verify that DTC P0C11, P0C12, or P0C13 is not set.

⇒ **If any of the DTCs are set**

Refer to *DTC P0C11-P0C13 on page 9-98*.

⇓ **If none of the DTCs are set**

4. Verify DTC P1E37 is not set.

⇒ **If the DTC is set**

4.1. Operate the vehicle within the Conditions for Running the DTC. You may also operate the vehicle within the conditions that you observed from the Freeze Frame/Failure Records data.

4.2. Verify the DTC does not set. If the DTC sets, replace the T6 Power Inverter Module.

⇓ **If the DTC is not set**

5. All OK.

Repair Instructions

Perform the *Diagnostic Repair Verification on page 6-123* after completing the repair.

Control Module References on page 6-3 for T6 Power Inverter Module, often referred to as the Drive Motor Generator Power Inverter Module, replacement, programming, and setup.

DTC P1E38

Diagnostic Instructions

- Perform the *Diagnostic System Check - Vehicle on page 6-91* prior to using this diagnostic procedure.
- Review *Strategy Based Diagnosis on page 6-83* for an overview of the diagnostic approach.
- *Diagnostic Procedure Instructions on page 6-84* provides an overview of each diagnostic category.

DTC Descriptor

DTC P1E38: Auxiliary Transmission Fluid Pump Inverter Supply Voltage Circuit

Circuit/System Description

The power inverter motor, often referred to as the drive motor generator power inverter module, contains two motor control modules and the hybrid/EV powertrain control module 1. One of the motor control modules operates the drive motor based upon the hybrid/EV powertrain control module 1 commands. The other motor control module controls the auxiliary transmission fluid pump. The hybrid/EV powertrain control module 1 and the motor control modules share the power inverter module ignition voltage circuit, battery voltage circuits and chassis ground.

Conditions for Running the DTC

- Vehicle is ON or Charge Mode is active.
- The hybrid/EV battery pack voltage is greater than 100V.

Conditions for Setting the DTC

The control module does not detect voltage at the insulated gate bi-polar transistor bias power supply.

Action Taken When the DTC Sets

DTC P1E38 is a Type A DTC.

Conditions for Clearing the DTC

DTC P1E38 is a Type A DTC.

Reference Information

DTC Type Reference

Powertrain Diagnostic Trouble Code (DTC) Type Definitions on page 6-92

Circuit/System Verification

1. Vehicle ON.
2. Verify DTC P1E38 is not set.

⇒ **If the DTC is set**

3. Verify the DTC does not set. If the DTC sets, replace the T6 Power Inverter Module.

⇓ **If the DTC is not set**

4. All OK.

Repair Instructions

Perform the *Diagnostic Repair Verification on page 6-123* after completing the repair.

Control Module References on page 6-3 for T6 Power Inverter Module, often referred to as the Drive Motor Generator Power Inverter Module, replacement, programming, and setup.

DTC P1E39

Diagnostic Instructions

- Perform the *Diagnostic System Check - Vehicle on page 6-91* prior to using this diagnostic procedure.
- Review *Strategy Based Diagnosis on page 6-83* for an overview of the diagnostic approach.
- *Diagnostic Procedure Instructions on page 6-84* provides an overview of each diagnostic category.

DTC Descriptor

DTC P1E39: Auxiliary Transmission Fluid Pump Inverter Performance

Circuit/System Description

The power inverter module, often referred to as the drive motor generator power inverter module, contains two motor control modules and the hybrid/EV powertrain control module 1. One of the motor control modules operates the drive motor based upon the hybrid/EV powertrain control module 1 commands. The other motor control module controls the auxiliary transmission fluid pump. Each motor control module controls its respective motor through the sequencing actuation of high current switching transistors called insulated gate bipolar transistors. Each insulated gate bipolar transistor assembly is monitored for fault conditions. The motor control modules are part of the power inverter module and are not serviced separately.

Conditions for Running the DTC

- The vehicle is ON or Charge Mode is active.
- The hybrid/EV battery pack voltage is greater than 100V.

Conditions for Setting the DTC

The motor control module detects excessive current flow through the switched portion of the insulated gate bipolar transistor.

Action Taken When the DTC Sets

- DTC P1E39 is a Type A DTC.
- Propulsion will be disabled and the hybrid/EV powertrain control module 1 requests the hybrid/EV powertrain control module 2 to open the high voltage contactor relays.

Conditions for Clearing the DTC

DTC P1E39 is a Type A DTC.

Reference Information

Schematic Reference

Hybrid/EV Controls Schematics on page 9-54

Connector End View Reference

- *Component Connector End Views on page 11-455*
- *Inline Harness Connector End Views on page 11-761*

Electrical Information Reference

- *Circuit Testing on page 11-871*
- *Connector Repairs on page 11-895*
- *Testing for Intermittent Conditions and Poor Connections on page 11-877*
- *Wiring Repairs on page 11-883*

DTC Type Reference

Powertrain Diagnostic Trouble Code (DTC) Type Definitions on page 6-92

Circuit/System Verification

Danger: Always perform the High Voltage Disabling procedure prior to servicing any High Voltage component or connection. Personal Protection Equipment (PPE) and proper procedures must be followed.

The High Voltage Disabling procedure will perform the following tasks:

- ***Identify how to disable high voltage.***
- ***Identify how to test for the presence of high voltage.***
- ***Identify condition under which high voltage is always present and personal protection equipment (PPE) and proper procedures must be followed.***

Failure to follow the procedures exactly as written may result in serious injury or death.

1. Perform the *High Voltage Disabling on page 9-363* procedure for servicing the T6 Power Inverter Module or the T12 Transmission.
2. Disconnect the X8 harness connector at the T6 Power Inverter Module.
3. Test for infinite resistance between the each of the AC circuit terminals listed below and ground for each phase of the G5 Auxiliary Transmission Fluid Pump:
   - X8 terminal 3 phase U
   - X8 terminal 2 phase V
   - X8 terminal 1 phase W

⇒ **If less than infinite resistance**

Replace the G5 Auxiliary Transmission Fluid Pump.

⇓ **If infinite resistance**

4. Replace the T6 Power Inverter Module.

5. Verify DTC P1E39 does not set.

⇒ **If the DTC sets**

Replace the G5 Auxiliary Transmission Fluid Pump.

⇓ **If the DTC does not set**

6. All OK.

Repair Instructions

Perform the *Diagnostic Repair Verification on page 6-123* after completing the repair.

- *Transmission Fluid Pump Replacement on page 16-39* for G5 Auxiliary Transmission Fluid Pump, often referred to as the A/Trans Aux Fluid Pump Motor, replacement.
- *Control Module References on page 6-3* for T6 Power Inverter Module, often referred to as the Drive Motor Generator Power Inverter Module, replacement, programming, and setup.

DTC P1E3A

Diagnostic Instructions

- Perform the *Diagnostic System Check - Vehicle on page 6-91* prior to using this diagnostic procedure.
- Review *Strategy Based Diagnosis on page 6-83* for an overview of the diagnostic approach.
- *Diagnostic Procedure Instructions on page 6-84* provides an overview of each diagnostic category.

DTC Descriptor

DTC P1E3A: Auxiliary Transmission Fluid Pump Motor Torque Delivered Performance

Circuit/System Description

The power inverter module, often referred to as the drive motor generator power inverter module, contains two motor control modules and the hybrid/EV powertrain control module 1. One of the motor control modules operates the drive motor based upon the hybrid/EV powertrain control module 1 commands. The other motor control module controls the auxiliary transmission fluid pump. The hybrid/EV powertrain control module 1 and the motor control modules share the power inverter module ignition voltage circuit, battery voltage circuits and chassis ground.

Conditions for Running the DTC

- The vehicle is ON.
- The system voltage is between 11.0–16.0 V.
- Auxiliary transmission fluid pump torque command is greater than 6.8 N•m (5 lb ft).

Conditions for Setting the DTC

The actual auxiliary transmission fluid pump speed is more than 200 RPM different from the commanded speed.

Action Taken When the DTC Sets

DTC P1E3A is a Type A DTC.

Conditions for Clearing the DTC

DTC P1E3A is a Type A DTC.

Diagnostic Aids

There should always be other hybrid/EV powertrain or motor control module DTCs set along with DTC P1E3A. Always diagnose other DTCs before addressing this DTC.

Reference Information

DTC Type Reference

Powertrain Diagnostic Trouble Code (DTC) Type Definitions on page 6-92

Circuit/System Verification

1. Verify that no other hybrid/EV powertrain or motor control module DTC is set.

⇒ **If any of the DTCs are set**

Refer to *Diagnostic Trouble Code (DTC) List - Vehicle on page 6-92*.

⇓ **If none of the DTCs are set**

2. Verify DTC P1E3A is not set.

⇒ **If the DTC is set**

2.1. Verify the DTC does not set.

⇒ If the DTC sets.

2.1.1. Replace the G5 Auxiliary Transmission Fluid Pump.

2.1.2. Verify the DTC does not set.

⇒ If the DTC sets, replace the T6 Power Inverter Module.

⇓ If the DTC does not set

2.1.3. All OK.

⇓ If the DTC is not set.

2.2. All OK.

⇓ **If the DTC is not set**

3. All OK.

Repair Instructions

Perform the *Diagnostic Repair Verification on page 6-123* after completing the repair.

- *Transmission Fluid Pump Replacement on page 16-39* for G5 Auxiliary Transmission Fluid Pump , often referred to as the A/Trans Aux Fluid Pump Motor, replacement.
- *Control Module References on page 6-3* for T6 Power Inverter Module, often referred to as the Drive Motor Generator Power Inverter Module, replacement, programming, and setup.

DTC P1E4A

Diagnostic Instructions

- Perform the *Diagnostic System Check - Vehicle on page 6-91* prior to using this diagnostic procedure.
- Review *Strategy Based Diagnosis on page 6-83* for an overview of the diagnostic approach.
- *Diagnostic Procedure Instructions on page 6-84* provides an overview of each diagnostic category.

DTC Descriptors

DTC P1E4A: Control Module Redundant Drive Motor Speed Sensing Circuit

Circuit/System Description

The drive motor position sensor is monitored by the motor control module. The motor control module monitors the angular position, speed and direction of the drive motor based upon the signals of the resolver-type position sensor. The position sensor allows the motor control module to determine the exact position, speed and direction of the drive motor. The hybrid/EV powertrain control module 1 also calculates motor speed and compares it to the motor control module's value to insure the accuracy of the hybrid/EV powertrain control module's value. This fault is handled inside the power inverter module, often referred to as the drive motor generator power inverter module, and no external circuits are involved. The control modules listed below are part of the power inverter module and are not serviced separately:

- Hybrid/EV powertrain control module 1
- Drive motor control module
- Auxiliary transmission fluid pump control module

Conditions for Running the DTC

- The vehicle must be ON.
- The system voltage is greater than 9.5 V.
- There are no SPI communication faults between the motor control module and the hybrid/EV powertrain control module.

Conditions for Setting the DTC

The calculated motor speed is greater than 400 RPM different from the measured speed.

Action Taken When the DTC Sets

- DTC P1E4A is a Type A DTC.
- Propulsion will be disabled.

Conditions for Clearing the DTC

DTC P1E4A is a Type A DTC.

Reference Information

DTC Type Reference

Powertrain Diagnostic Trouble Code (DTC) Type Definitions on page 6-92

Circuit/System Verification

1. Vehicle ON.
2. Verify DTC P0562, P0563, or P0606 is not set.

⇒ **If any of the DTCs are set**

Refer to *Diagnostic Trouble Code (DTC) List - Vehicle on page 6-92*.

⇓ **If none of the DTCs are set**

3. Verify DTC P1E4A is not set.
   - ⇒ If the DTC sets, replace the T6 Power Inverter Module.
   - ⇓ If the DTC does not set.
4. All OK.

⇓ **If none of the DTCs are set**

5. All OK.

Repair Instructions

Perform the *Diagnostic Repair Verification on page 6-123* after completing the repair.

Control Module References on page 6-3 for T6 Power Inverter Module, often referred to as the Drive Motor Generator Power Inverter Module, replacement, programming, and setup.

DTC P1F59, P1F5A, or P1F5B

Diagnostic Instructions

- Perform the *Diagnostic System Check - Vehicle on page 6-91* prior to using this diagnostic procedure.
- Review *Strategy Based Diagnosis on page 6-83* for an overview of the diagnostic approach.
- *Diagnostic Procedure Instructions on page 6-84* provides an overview of each diagnostic category.

DTC Descriptor

DTC P1F59: 14 Volt Power Module Status Terminal Circuit Performance
DTC P1F5A: 14 Volt Power Module Status Terminal Circuit Low Voltage
DTC P1F5B: 14 Volt Power Module Status Terminal Circuit High Voltage

Diagnostic Fault Information

Circuit	Short to Ground	Open/High Resistance	Short to Voltage	Signal Performance
Control – L Terminal	P1F5D	—	P1F5E	—
Status – F Terminal	P1F59, P1F5A	P1F59, P1F5A	P1F59, P1F5B	P1F59

Circuit/System Description

The ECM uses two circuits to control and monitor the state of the 14V power module, often referred to as the accessory DC power control module.

The control circuit functions much like the L Terminal circuit on a generator equipped vehicle. A high side driver in the ECM applies a duty cycled 5V signal to the 14V Power Module. The duty cycles controls the 14V power module output.

The status circuit functions much like the F Terminal circuit on a generator equipped vehicle. A high side driver in the 14V power module applies a duty cycled voltage to the ECM. The duty cycle indicates 14V power module internal temperature and operational condition. The ECM will detect faults on the 14V power module status circuit when the vehicle is ON.

The 14V Power Module high voltage circuit is fuse protected within the T24 Battery Charger – DC. The fuse is not serviceable.

Conditions for Running the DTC

The vehicle is ON.

Conditions for Setting the DTC

- P1F5A: The ECM detects a 5% or lower PWM signal on the 14V power module status circuit for 8 seconds out of a 10 second window.
- P1F5B: The ECM detects a 96% or higher PWM signal on the 14V power module status circuit for 8 seconds out of a 10 second window.
- P1F59: The status circuit PWM signal is not in a valid range.

Action Taken When the DTC Sets

DTCs P1F59, P1F5A and P1F5B are type C DTCs.

Conditions for Clearing the DTC

DTCs P1F59, P1F5A and P1F5B are type C DTCs.

Reference Information

Schematic Reference

- *Starting and Charging Schematics on page 9-8*
- *Hybrid/EV Controls Schematics on page 9-54*

Connector End View Reference

Component Connector End Views on page 11-455

Electrical Information Reference

- *Circuit Testing on page 11-871*
- *Connector Repairs on page 11-895*
- *Testing for Intermittent Conditions and Poor Connections on page 11-877*
- *Wiring Repairs on page 11-883*

DTC Type Reference

Powertrain Diagnostic Trouble Code (DTC) Type Definitions

Scan Tool Reference

Control Module References on page 6-3 for scan tool information

Circuit/System Verification

Note: Do not have a 12V battery charger connected during the testing.

1. Operate the vehicle within the Conditions for Running the DTC. You may also operate the vehicle within the conditions that you observed from the Freeze Frame/Failure Records data.
2. Verify the DTC does not set.

⇒ **If the DTC sets**

Refer to Circuit/System Testing.

⇓ **If the DTC does not set**

3. All OK.

Circuit/System Testing

Danger: Always perform the High Voltage Disabling procedure prior to servicing any High Voltage component or connection. Personal Protection Equipment (PPE) and proper procedures must be followed.

The High Voltage Disabling procedure will perform the following tasks:

- ***Identify how to disable high voltage.***
- ***Identify how to test for the presence of high voltage.***
- ***Identify condition under which high voltage is always present and personal protection equipment (PPE) and proper procedures must be followed.***

Failure to follow the procedures exactly as written may result in serious injury or death.

1. Verify a test lamp illuminates between the 14V Power Module B+ circuit ring terminal and ground.

⇒ **If the test lamp does not illuminate and the circuit fuse is good**

1.1. Remove the test lamp and disconnect the B+ cable at the 14V power module.

1.2. Test for less than 2 Ω in the B+ circuit end to end.

⇒ If 2 Ω or greater, repair the open/high resistance in the circuit.

⇒ If less than 2 Ω, verify the mega fuse is not open and there is voltage at the fuse.

⇒ **If the test lamp does not illuminate and the circuit fuse is open**

1.1. Remove the test lamp and disconnect the battery negative cable. Refer to *Battery Negative Cable Disconnection and Connection on page 9-20*

1.2. Disconnect the 14V power module B+ cable.

1.3. Test for infinite resistance between the B+ circuit and ground.

⇒ If less than infinite resistance, repair the short to ground on the circuit.

⇒ If infinite resistance replace the K1 14V Power Module and the mega fuse.

⇓ **If the test lamp illuminates**

2. Disconnect the X2 harness connector at the 14V power module, vehicle ON.
3. Test for 3.0– 5.5 V between the control circuit terminal X2-01 and ground.

⇒ **If less than 3.0 V**

3.1. Vehicle OFF, disconnect the harness connectors at the K20 ECM.

3.2. Test for infinite resistance between the control circuit and ground.

⇒ If less than infinite resistance, repair the short to ground on the circuit.

⇓ If infinite resistance

3.3. Test for less than 2 Ω in the control circuit end to end.

⇒ If greater the 2 Ω, repair the open/high resistance in the circuit.

⇒ If less than 2 Ω, replace the K20 ECM.

⇒ **If greater than 5.5 V**

3.1. Vehicle OFF, disconnect the harness connectors at the K20 ECM, Vehicle ON.

3.2. Test for less than 1 V between the control circuit and ground.

⇒ If greater than 1 V, repair the short to voltage on the circuit.

⇒ If less than 1 V, replace the K20 ECM.

⇓ **If between 3.0–5.5 V**

4. Vehicle OFF, disconnect the harness connectors at the K20 ECM.
5. Test for infinite resistance between the 14V power module status circuit terminal X2-03 and ground.

⇒ **If less than infinite resistance**

Repair the short to ground on the circuit.

⇓ **If infinite resistance**

6. Test for less than 2 Ω in the status circuit end to end.

⇒ **If greater the 2 Ω**

Repair the open/high resistance in the circuit.

⇓ **If less than 2 Ω**

7. Disable the high voltage. Refer to *High Voltage Disabling on page 9-363*.

Note: T24 Battery Charger – DC high voltage connector X1 is disconnected during the High Voltage Disable procedure.

8. Disconnect the T24 Battery Charger – DC high voltage connector X3 for the 14V Power Module.
9. Verify that the 14V Power Module non-serviceable high voltage fuse within the T24 Battery Charger – DC is good. Test for less than 2 Ω between the following T24 Battery Charger-DC high voltage connector terminals:
   - High voltage negative terminal X1 B to high voltage negative terminal B X3
   - High voltage positive terminal X1 A to high voltage positive terminal A X3

⇒ **If greater than 2 Ω**

Replace the T24 Battery Charger – DC and the 14V Power Module.

⇓ **If less than 2 Ω**

10. Replace the K1 14V Power Module.
11. Verify the DTC does not set.

⇒ **If the DTC sets**

Replace the K20 ECM.

⇓ **If the DTC does not set**

12. All OK.

Repair Instructions

Perform the *Diagnostic Repair Verification on page 6-123* after completing the repair.

Control Module References on page 6-3 for ECM replacement, programming, and setup or for K1 14V Power Module, often referred to as the Accessory DC Power Control Module, replacement, programming, and setup.

DTC P1F5D or P1F5E

Diagnostic Instructions

- Perform the *Diagnostic System Check - Vehicle on page 6-91* prior to using this diagnostic procedure.
- Review *Strategy Based Diagnosis on page 6-83* for an overview of the diagnostic approach.
- *Diagnostic Procedure Instructions on page 6-84* provides an overview of each diagnostic category.

DTC Descriptor

DTC P1F5D: 14 Volt Power Module L-Terminal Circuit Low Voltage
DTC P1F5E: 14 Volt Power Module L-Terminal Circuit High Voltage

Diagnostic Fault Information

Circuit	Short to Ground	Open/High Resistance	Short to Voltage	Signal Performance
Control – L Terminal	P1F5D	—	P1F5E	—
Status – F Terminal	P1F59, P1F5A	P1F59, P1F5A	P1F59, P1F5B	P1F59

Circuit/System Description

The ECM uses two circuits to control and monitor the state of the 14V power module, often referred to as the accessory DC power control module. The control circuit functions much like the L Terminal circuit on a generator equipped vehicle. A high side driver in the ECM applies a duty cycled voltage to the 14V power module. The duty cycle controls the 14V power module output. The ECM monitors the state of the 14V power module control circuit. The ECM will detect faults on the 14V power module control circuit when the vehicle is ON.

Conditions for Running the DTC

The vehicle is ON.

Conditions for Setting the DTC

- P1F5D: The ECM detects a low voltage on the 14V power module control circuit for 8 seconds out of a 10 second window.
- P1F5E: The ECM detects a high voltage on the 14V power module control circuit for 8 seconds out of a 10 second window.

Action Taken When the DTC Sets

DTCs P1F5D and P1F5E are type C DTCs.

Conditions for Clearing the DTC

DTCs P1F5D and P1F5E are type C DTCs.

Reference Information

Schematic Reference

- *Starting and Charging Schematics on page 9-8*
- *Hybrid/EV Controls Schematics on page 9-54*

Connector End View Reference

Component Connector End Views on page 11-455

Electrical Information Reference

- *Circuit Testing on page 11-871*
- *Connector Repairs on page 11-895*
- *Testing for Intermittent Conditions and Poor Connections on page 11-877*
- *Wiring Repairs on page 11-883*

DTC Type Reference

Powertrain Diagnostic Trouble Code (DTC) Type Definitions

Scan Tool Reference

Control Module References on page 6-3 for scan tool information

Circuit/System Verification

Note: Do not have a 12V battery charger connected during the testing.

1. Operate the vehicle within the Conditions for Running the DTC. You may also operate the vehicle within the conditions that you observed from the Freeze Frame/Failure Records data.
2. Verify the DTC does not set.

⇒ **If the DTC sets**

Refer to Circuit/System Testing.

⇓ **If the DTC does not set**

3. All OK.

Circuit/System Testing

1. Verify a test lamp illuminates between the 12V B+ circuit ring terminal and ground.

⇒ **If the test lamp does not illuminate and the circuit fuse is good**

1.1. Remove the test lamp and disconnect the B+ cable at the 14V power module.

1.2. Test for less than 2 Ω in the B+ circuit end to end.

⇒ If 2 Ω or greater, repair the open/high resistance in the circuit.

⇒ If less than 2 Ω, verify the fuse is not open and there is voltage at the fuse.

⇒ **If the test lamp does not illuminate and the circuit fuse is open**

1.1. Remove the test lamp, disconnect the battery negative cable, and disconnect the 14V power module B+ cable.

1.2. Test for infinite resistance between the B+ circuit and ground.

⇒ If less than infinite resistance, repair the short to ground on the circuit.

⇓ **If the test lamp illuminates**

2. Disconnect the X2 harness connector at the 14V power module, vehicle ON.
3. Test for 3.0– 5.5 V between the control circuit terminal X2-01 and ground.

⇒ **If less than 3.0 V**

3.1. Vehicle OFF, disconnect the harness connectors at the K20 ECM.

3.2. Test for infinite resistance between the control circuit and ground.

⇒ If less than infinite resistance, repair the short to ground on the circuit.

⇓ If infinite resistance

3.3. Test for less than 2 Ω in the control circuit end to end.

⇒ If greater the 2 Ω, repair the open/high resistance in the circuit.

⇒ If less than 2 Ω, replace the K20 ECM.

⇒ **If greater than 5.5 V**

3.1. Vehicle OFF, disconnect the harness connectors at the K20 ECM, Vehicle ON.

3.2. Test for less than 1 V between the control circuit terminal and ground.

⇒ If greater than 1 V, repair the short to voltage on the circuit.

⇒ If less than 1 V, replace the K20 ECM.

⇓ **If between 3.0–5.5 V**

4. Test or replace the K1 14V Power Module.

Repair Instructions

Perform the *Diagnostic Repair Verification on page 6-123* after completing the repair.

Control Module References on page 6-3 for ECM replacement, programming, and setup or for K1 14V Power Module, often referred to as the Accessory DC Power Control Module, replacement, programming, and setup.

DTC P2122, P2123, P2127, P2128, or P2138

Diagnostic Instructions

- Perform the *Diagnostic System Check - Vehicle on page 6-91* prior to using this diagnostic procedure.
- Review *Strategy Based Diagnosis on page 6-83* for an overview of the diagnostic approach.
- *Diagnostic Procedure Instructions on page 6-84* provides an overview of each diagnostic category.

DTC Descriptor

DTC P2122: Accelerator Pedal Position (APP) Sensor 1 Circuit Low Voltage
DTC P2123: Accelerator Pedal Position (APP) Sensor 1 Circuit High Voltage
DTC P2127: Accelerator Pedal Position (APP) Sensor 2 Circuit Low Voltage
DTC P2128: Accelerator Pedal Position (APP) Sensor 2 Circuit High Voltage
DTC P2138: Accelerator Pedal Position (APP) Sensors 1–2 Not Plausible

Diagnostic Fault Information

Circuit	Short to Ground	Open/High Resistance	Short to Voltage	Signal Performance
Accelerator Pedal Position (APP) Sensor 1 5V Reference	P2122	P2138	P06A3, P2135	P2138
Accelerator Pedal Position (APP) Sensor 2 5V Reference	P2127	P2128	P2128	P2138
Accelerator Pedal Position (APP) Sensor 1 Signal	P2122	P2122, P2138	P2123	P2138
Accelerator Pedal Position (APP) Sensor 2 Signal	P2127	P2127, P2138	P2128, P2138	P2138
Accelerator Pedal Position (APP) Sensor 1 Low Reference	—	P2123, P2138	—	P2138
Accelerator Pedal Position (APP) Sensor 2 Low Reference	—	P2128, P2138	—	P2138

Typical Scan Tool Data

Accelerator Pedal Position Sensor 1

Circuit	Short to Ground	Open	Short to Voltage
Operating Conditions: Vehicle is On. **Parameter Normal Range:** APP Sensor 1 0.88–1.08V			
Accelerator Pedal Position Sensor 1 5V Reference	0.00V	0.00V	5–12V
Accelerator Pedal Position Sensor 1 Signal	0.00V	0.00V	5–12V
Accelerator Pedal Position Sensor 1 Low Reference	—	4–5V	—

Accelerator Pedal Position Sensor 2

Circuit	Short to Ground	Open	Short to Voltage
Operating Conditions: Vehicle is On. **Parameter Normal Range:** APP Sensor 2 0.39–0.59V			
Accelerator Pedal Position Sensor 2 5V Reference	0.00V	0.00V	1–3V
Accelerator Pedal Position Sensor 2 Signal	0.00V	0.00V	2–5V

Accelerator Pedal Position Sensor 2 (cont'd)

Circuit	Short to Ground	Open	Short to Voltage
Accelerator Pedal Position Sensor 2 Low Reference	—	4–5V	—

Circuit/System Description

The accelerator pedal assembly contains 2 accelerator pedal position (APP) sensors. The APP sensors are mounted to the accelerator pedal assembly and are not serviceable. The APP sensors provide a signal voltage that changes relative to pedal position. The ECM supplies each APP sensor with a 5V reference circuit, a low reference circuit, and a signal circuit. Both the APP sensors 1 and 2 signal percentages increase as the pedal is depressed, from approximately 0% at rest to above 95% when fully depressed.

The ECM provides the accelerator pedal position or driver torque request to the hybrid/EV powertrain control module 1. The hybrid/EV powertrain control module 1 determines how the torque output will be distributed.

Conditions for Running the DTC

P2122, P2123, P2127, P2128

- DTC P0697 is not set – P2127 or P2128.
- DTC P06A3 is not set – P2122 or P2123.
- The vehicle is ON.
- The run voltage is greater than 6.4V.
- The DTCs run continuously when the above conditions are met.

P2138

- DTCs P06A3, P0697, P2122, P2123, P2127, or P2128 are not set.
- The vehicle is ON.
- The run voltage is greater than 6.4V.
- The DTC runs continuously when the above conditions are met.

Conditions for Setting the DTC

P2122

The ECM detects that the APP sensor 1 voltage is less than 0.46V for greater than 1 s.

P2123

The ECM detects that the APP sensor 1 voltage is greater than 4.7V for greater than 1 s.

P2127

The ECM detects that the APP sensor 2 voltage is less than 0.32V for greater than 1 s.

P2128

The ECM detects that APP sensor 2 voltage is greater than 2.6V for greater than 0.5 s.

P2138

The voltage difference between APP sensor 1 and APP sensor 2 exceeds a predetermined value for greater than 1 s.

Action Taken When the DTC Sets

- DTCs P2122, P2123, P2127, and P2128, and P2138 are Type A DTCs.
- ECM commands the reduced power mode.
- Creep torque and hill hold are disabled.
- Service Parking Brake light is illuminated.

Conditions for Clearing the DTC

DTCs P2122, P2123, P2127, and P2128, and P2138 are Type A DTCs.

Diagnostic Aids

- A high resistance condition on the accelerator pedal sensor circuits could cause a DTC to set.
- Ensure that the in-line harness connector seals are installed correctly. Improper installation could result in water intrusion into the connector and cause a DTC to set.

Reference Information

Schematic Reference

Hybrid/EV Controls Schematics on page 9-54

Connector End View Reference

Component Connector End Views on page 11-455

Description and Operation

Hybrid Modes of Operation Description on page 9-197

Electrical Information Reference

- *Circuit Testing on page 11-871*
- *Connector Repairs on page 11-895*
- *Testing for Intermittent Conditions and Poor Connections on page 11-877*
- *Wiring Repairs on page 11-883*

DTC Type Reference

Powertrain Diagnostic Trouble Code (DTC) Type Definitions on page 6-92

Scan Tool Reference

Control Module References on page 6-3 for scan tool information.

Circuit/System Verification

1. Vehicle in Service Mode.
2. Verify DTC P0641, P0697, or P06A3 is not set.

⇒ **If any of the DTCs are set**

Refer to *DTC P0641, P0697, or P06A3 on page 9-70* for further diagnosis.

⇓ **If none of the DTCs are set**

3. Verify the APP Sensor 1 Circuit Status and APP Sensor 2 Circuit Status parameter displays OK.

⇒ **If Malfunction is displayed**

Refer to Circuit/System Testing.

⇓ **If OK is displayed**

4. Verify the scan tool APP Sensor 1 and 2 Agree/ Disagree parameter displays Agree while performing the tests listed below:
   4.1. Rapidly depress the accelerator pedal from the rest position to the wide open throttle position (WOT) and release pedal. Repeat the procedure several times.
   4.2. Slowly depress the accelerator pedal to WOT and then slowly return the pedal to closed throttle. Repeat the procedure several times.

⇒ **If Disagree**

Refer to Circuit/System Testing.

⇓ **If Agree**

5. Verify that DTC P2122, P2123, P2127, P2128, or P2138 is not set.

⇒ **If any of the DTCs are set**

Refer to Circuit/System Testing.

⇓ **If none of the DTCs set**

6. Operate the vehicle within the Conditions for Running the DTC. You may also operate the vehicle within the conditions that you observed from the Freeze Frame/Failure Records data.
7. Verify DTC P2122, P2123, P2127, P2128, or P2138 is not set.

⇒ **If any DTC sets**

Refer to Circuit/System Testing.

⇓ **If no DTCs set**

8. All OK.

Circuit/System Testing

1. Vehicle OFF and all vehicle systems OFF, disconnect the harness connector at the B107 accelerator pedal assembly. It may take up to 2 minutes for all vehicle systems to power down.
2. Test for less than 5 Ω between each low reference circuit terminal listed below and ground:
   - Low reference circuit X1 terminal 4
   - Low reference circuit X1 terminal 3

⇒ **If 5 Ω or greater**

2.1. Vehicle OFF, disconnect the harness connector at the K20 ECM.
2.2. Test for less than 2 Ω in the low reference circuit end to end.

⇒ If 2 Ω or greater, repair the open/high resistance in the circuit.

⇒ If less than 2 Ω, replace the K20 ECM.

⇓ **If less than 5 Ω**

3. Vehicle in Service Mode.
4. Test for 4.8–5.2V between each 5V reference circuit terminals listed below and ground:
   - 5V reference circuit terminal 1
   - 5V reference circuit terminal 2

⇒ **If less than 4.8V**

4.1. Vehicle OFF, disconnect the harness connector at the K20 ECM.
4.2. Test for infinite resistance between the 5V reference circuit and ground.

⇒ If less than infinite resistance, repair the short to ground on the circuit.

⇒ If infinite resistance

4.3. Test for less than 2 Ω in the 5V reference circuit end to end.

⇒ If 2 Ω or greater, repair the open/high resistance in the circuit.

⇒ If less than 2 Ω, replace the K20 ECM.

⇓ **If greater than 5.2V**

4.1. Vehicle OFF, disconnect the harness connector at the K20 ECM, vehicle in Service Mode.
4.2. Test for less than 1V between the 5V reference circuit and ground.

⇒ If 1V or greater, repair the short to voltage on the circuit.

⇒ If less than 1V, replace the K20 ECM.

⇓ **If between 4.8–5.2V**

5. Verify each APP sensor voltage parameter is less than 0.2V.

⇒ **If 0.2V or greater**

5.1. Vehicle OFF, disconnect the harness connector at the K20 ECM, vehicle in Service Mode.
5.2. Test for less than 1V between the signal circuit terminal listed below and ground:
   - APP sensor 1 signal circuit terminal 5
   - APP sensor 2 signal circuit terminal 2

⇒ If 1 V or greater, repair the short to voltage on the circuit.

⇒ If less than 1 V, replace the K20 ECM.

⇓ **If less than 0.2V**

6. Install a 3A fused jumper wire between each signal circuit terminals listed below and the 5V reference circuit terminal 1:
   - APP sensor 1 signal circuit terminal 5
   - APP sensor 2 signal circuit terminal 2

7. Verify the scan tool APP sensor voltage parameter is greater than 4.8V.

⇒ **If 4.8V or less**

7.1. Vehicle OFF, disconnect the harness connector at the K20 ECM.

7.2. Test for infinite resistance between the signal circuit terminal and ground.

⇒ If less than infinite resistance, repair the short to ground on the circuit.

⇓ If infinite resistance

7.3. Test for less than 2 Ω in the signal circuit end to end.

⇒ If 2 Ω or greater, repair the open/high resistance in the circuit.

⇒ If less than 2 Ω, replace the K20 ECM.

⇓ **If greater than 4.8V**

8. Test or replace the B107 accelerator pedal assembly.

Repair Instructions

Perform the *Diagnostic Repair Verification on page 6-123* after completing the repair.

- Accelerator Pedal Position Sensor Replacement
- *Control Module References on page 6-3* for K20 ECM replacement, programming, and setup.

DTC P2537 (Hybrid Powertrain Control Module 1)

Diagnostic Instructions

- Perform the *Diagnostic System Check - Vehicle on page 6-91* prior to using this diagnostic procedure.
- Review *Strategy Based Diagnosis on page 6-83* for an overview of the diagnostic approach.
- *Diagnostic Procedure Instructions on page 6-84* provides an overview of each diagnostic category.

DTC Descriptor

DTC P2537: Ignition Accessory Switch Circuit Low Voltage

Diagnostic Fault Information

Circuit	Short to Ground	Open/High Resistance	Short to Voltage	Signal Performance
Ignition Voltage	P2537	P2537	—	—

Typical Scan Tool Data

Accessory Voltage

Circuit	Short to Ground	Open/High Resistance	Short to Voltage
Operating Conditions: Key ON **Parameter Normal Range:** 8–18 volts			
Accessory	0 volts	0 volts	B+

Circuit/System Description

The hybrid powertrain control module 1 samples the system voltage on the accessory voltage circuit. Higher or lower than normal voltage may cause erratic vehicle operation. The Hybrid/EV Powertrain Control Module 1 is internal to the Drive Motor Generator Power Inverter Module.

Conditions for Running the DTC

Propulsion system is active for 5 s.

Conditions for Setting the DTC

Hybrid powertrain control module 1 detects the accessory voltage circuit is open for 1 s.

Action Taken When the DTC Sets

P2537 is a Type A DTC.

Conditions for Clearing the DTC

P2537 is a Type A DTC.

Diagnostic Aids

- Verify the K114A hybrid powertrain control module 1 X2 connector and harness terminals are clean and not damaged.
- Verify the charging system is functioning correctly.

Reference Information

Schematic Reference

Automatic Transmission Controls Schematics on page 16-7

Connector End View Reference

Component Connector End Views on page 11-455

Electrical Information Reference

- *Circuit Testing on page 11-871*
- *Connector Repairs on page 11-895*
- *Testing for Intermittent Conditions and Poor Connections on page 11-877*
- *Wiring Repairs on page 11-883*

DTC Type Reference

Powertrain Diagnostic Trouble Code (DTC) Type Definitions on page 6-92

Circuit/System Testing

1. Vehicle OFF, disconnect the X2 harness connector at the K114A hybrid powertrain control module 1.
2. Vehicle ON.

3. Verify a test lamp illuminates between the ignition circuit terminal 19 and ground.

⇒ **If the test lamp does not illuminate and the circuit fuse is good**

3.1. Vehicle OFF.

3.2. Test for less than 2 Ω in the ignition circuit end to end.

⇒ If 2 Ω or greater, repair the open/high resistance in the circuit.

⇒ If less than 2 Ω, verify the fuse is OK and there is voltage at the fuse.

⇒ **If the test lamp does not illuminate and the circuit fuse is open**

3.1. Vehicle OFF.

3.2. Test for infinite resistance between the ignition circuit and ground.

⇒ If less than infinite resistance, repair the short to ground on the circuit.

⇒ If infinite resistance, replace the T6 power inverter module 1.

⇓ **If the test lamp illuminates**

4. All OK.

Repair Instructions

Perform the *Diagnostic Repair Verification on page 6-123* after completing the repair.

Control Module References on page 6-3 for T6 Power Inverter Module, often referred to as the Drive Motor Generator Power Inverter Module replacement, programming, and setup.

DTC P2797

Diagnostic Instructions

- Perform the *Diagnostic System Check - Vehicle on page 6-91* prior to using this diagnostic procedure.
- Review *Strategy Based Diagnosis on page 6-83* for an overview of the diagnostic approach.
- *Diagnostic Procedure Instructions on page 6-84* provides an overview of each diagnostic category.

DTC Descriptor

DTC P2797: Auxiliary Transmission Fluid Pump Performance

Circuit/System Description

The power inverter module, often referred to as the drive motor generator power inverter module, contains two motor control modules and the hybrid/EV powertrain control module 1. One of the motor control modules operates the drive motor based upon the hybrid/EV powertrain control module 1 commands. The other motor control module controls the auxiliary transmission fluid pump. The hybrid/EV powertrain control module 1 and the motor control modules share the power inverter module ignition voltage circuit, battery voltage circuits and chassis ground.

Conditions for Running the DTC

- The Run/Crank voltage is greater than 6 V.
- The auxiliary transmission fluid pump is commanded greater than 500 RPM for 1 second.

Conditions for Setting the DTC

The difference between desired and actual auxiliary transmission fluid pump speed is greater than 500 RPM.

Action Taken When the DTC Sets

- DTC P2797 is a Type A DTC.
- Vehicle speed will be limited, the Propulsion Power is Reduced message will be illuminated.

Conditions for Clearing the DTC

DTC P2797 is a Type A DTC.

Diagnostic Aids

- There should always be other hybrid/EV powertrain control module 1 or motor control module DTCs set along with DTC P2797. Always diagnose other DTCs before addressing this DTC.
- This DTC may be set if the high voltage contactors open while the Auxiliary Transmission Fluid Pump has been commanded on using the Scan Tool.

Reference Information

DTC Type Reference

Powertrain Diagnostic Trouble Code (DTC) Type Definitions on page 6-92

Circuit/System Verification

1. Verify that no other hybrid/EV powertrain control module 1 or motor control module DTC is set.

⇒ **If any of the DTCs are set**

Refer to *Diagnostic Trouble Code (DTC) List - Vehicle on page 6-92*.

⇓ **If none of the DTCs are set**

2. Verify DTC P2797 is not set.

⇒ **If the DTC is set**

3. Verify the DTC does not set. If the DTC sets, replace the G5 Auxiliary Transmission Fluid Pump.
4. Verify the DTC does not set. If the DTC sets, replace the T6 Power Inverter Module.

⇓ **If the DTC does not set**

5. All OK.

Repair Instructions

Perform the *Diagnostic Repair Verification on page 6-123* after completing the repair.

- *Transmission Fluid Pump Replacement on page 16-39* for G5 Auxiliary Transmission Fluid Pump, often referred to as the A/Trans Aux Fluid Pump Motor, replacement.
- *Control Module References on page 6-3* for T6 Power Inverter Module, often referred to as the Drive Motor Generator Power Inverter Module, replacement, programming, and setup.

Symptoms - Hybrid Controls

Note: The following steps must be completed before using the symptom tables.

1. Perform the *Diagnostic System Check - Vehicle on page 6-91* before using the symptom tables in order to verify that all of the following are true:
   - There are no DTCs set.
   - The control modules can communicate via the serial data link.
2. Review the system operation in order to familiarize yourself with the system functions.

   Refer to the following procedures:
   - *Accessory DC Power Control Module Description and Operation on page 9-192*
   - *Drive Motor Generator Power Inverter Module Description and Operation on page 9-193*

- *Engine Control Module (ECM) Description and Operation on page 9-194*
- *Electromagnetic Compatibility Description on page 9-196*
- *High Voltage Monitoring Systems Description on page 9-196*
- *Hybrid Modes of Operation Description on page 9-197*
- *Drive Motor Battery System Description on page 9-545*
- *Transmission General Description on page 16-92*

Visual/Physical Inspection

- Inspect for aftermarket devices which could affect the operation of the Hybrid System. Refer to *Checking Aftermarket Accessories on page 11-871*.
- Inspect the easily accessible or visible system components for obvious damage or conditions which could cause the symptom.

Intermittent

Faulty electrical connections or wiring may be the cause of intermittent conditions. Refer to *Testing for Intermittent Conditions and Poor Connections on page 11-877*.

Symptom List

Refer to a symptom diagnostic procedure from the following list in order to diagnose the symptom:

- *DC Power Conversion Test on page 9-169*
- *Sport Mode Indicator Malfunction on page 9-168*

Sport Mode Indicator Malfunction

Diagnostic Instructions

- Perform the *Diagnostic System Check - Vehicle on page 6-91* prior to using this diagnostic procedure.
- Review *Strategy Based Diagnosis on page 6-83* for an overview of the diagnostic approach.
- *Diagnostic Procedure Instructions on page 6-84* provides an overview of each diagnostic category.

Diagnostic Fault Information

Circuit	Short to Ground	Open/High Resistance	Short to Voltage	Signal Performance
Signal	Stuck in Normal Mode	Stuck in Normal Mode	Stuck in Normal Mode	P1762
Ground	Stuck in Normal Mode	Stuck in Normal Mode	Stuck in Normal Mode	P1762

Circuit/System Description

The body control module monitors the signal circuit from the Sport Mode switch. When the Sport Mode switch is pressed once, the body control module will request the ECM via serial data to enable Sport Mode. The ECM will request the instrument cluster via serial data to turn the Sport Mode indicator ON to notify the driver of the activation.

When the Sport Mode switch is pressed again, the body control module will request the ECM to disable the Sport Mode. The ECM will request the instrument cluster via serial data to turn the Sport Mode Off and the instrument cluster will display Normal to notify the drive of the deactivation. The Sport Mode switch is part of the S48E Multifunction Switch-Center Console and is not serviced separately.

Reference Information

Schematic Reference

Hybrid/EV Controls Schematics on page 9-54

Connector End View Reference

Component Connector End Views on page 11-455

Electrical Information Reference

- *Circuit Testing on page 11-871*
- *Connector Repairs on page 11-895*
- *Testing for Intermittent Conditions and Poor Connections on page 11-877*
- *Wiring Repairs on page 11-883*

Scan Tool Reference

Control Module References on page 6-3 for scan tool information.

Circuit/System Verification

1. Vehicle in Service Mode.
2. Verify the scan tool Sport Mode parameter in the ECM Hybrid/EV data list changes between Active and Inactive while pressing and releasing the Sport Mode switch.

⇒ **If the parameter does not change**

Refer to Circuit/System Testing.

⇓ **If the parameter changes**

3. Replace the P16 Instrument Cluster.

Circuit/System Testing

1. Vehicle OFF, scan tool disconnected, and all vehicle systems OFF, disconnect the harness connector at the S48E Multifunction Switch-Center Console. It may take up to 2 min for all vehicle systems to power down.
2. Test for less than 5 Ω between the ground circuit terminal 9 and ground.

⇒ **If 5 Ω or greater**

2.1. Vehicle OFF

2.2. Test for less than 2 Ω in the ground circuit end to end.

⇒ If 2 Ω or greater, repair the open/high resistance in the circuit.

⇒ If less than 2 Ω, repair the open/high resistance in the ground connection.

⇓ **If less than 5 Ω**

3. Vehicle in Service Mode.
4. Verify the scan tool Sport Mode parameter in the ECM Hybrid/EV data list is Inactive.

⇒ **If not Inactive**

4.1. Vehicle OFF, disconnect the X2 harness connector at the K9 Body Control Module.

4.2. Test for infinite resistance between the signal circuit terminal 18 and ground.

⇒ If less than infinite resistance, repair the short to ground on the circuit.

⇒ If infinite resistance, replace the K9 Body Control Module.

⇓ **If Inactive**

5. Install a 3 A fused jumper wire between the signal circuit terminal 5 and the ground circuit terminal 9.
6. Verify the scan tool Sport Mode parameter in the ECM Hybrid/EV data list is Active.

⇒ **If not Active**

6.1. Vehicle OFF, disconnect the X2 harness connector at the K9 Body Control Module, vehicle in service mode.

6.2. Test for less than 1 V between the signal circuit and ground.

⇒ If 1 V or greater, repair the short to voltage on the circuit.

⇓ If less than 1 V

6.3. Vehicle OFF.

6.4. Test for less than 2 Ω in the signal circuit end to end.

⇒ If 2 Ω or greater, repair the open/high resistance in the circuit.

⇒ If less than 2 Ω, replace the K9 Body Control Module.

⇓ **If Active**

7. Test or replace the S48E Multifunction Switch-Center Console.

Component Testing

1. Vehicle OFF, disconnect the harness connector at the S48E Multifunction Switch-Center Console.
2. Test for infinite resistance between the signal terminal 5 and the ground terminal 9 with the switch in the open position.

⇒ **If less than infinite resistance**

Replace the S48E Multifunction Switch-Center Console.

⇓ **If infinite resistance**

3. Test for less than 2 Ω between the signal circuit terminal 5 and the ground terminal 9 with the switch in the closed position.

⇒ **If 2 Ω or greater**

Replace the S48E Multifunction Switch-Center Console.

⇓ **If less than 2 Ω**

4. All OK.

Repair Instructions

Perform the *Diagnostic Repair Verification on page 6-123* after completing the repair.

- *Instrument Cluster Replacement on page 8-95*
- *Vehicle Stability Control System Switch Replacement on page 5-90* for S48E Multifunction Switch-Center Console replacement.
- *Control Module References on page 6-3* for body control module or instrument cluster replacement, programming and setup

DC Power Conversion Test

Diagnostic Instructions

- Perform the Diagnostic System Check prior to using this diagnostic procedure: *Diagnostic System Check - Vehicle on page 6-91*
- Review the description of Strategy Based Diagnosis: *Strategy Based Diagnosis on page 6-83*
- An overview of each diagnostic category can be found here: *Diagnostic Procedure Instructions on page 6-84*

Circuit/System Description

The 14 V power module, often referred to as the accessory DC power control module, converts the high voltage (360 V) direct current (DC) to low voltage (14 V) DC to charge the 12 V battery and to operate the power accessories.

The ECM uses two circuits to control and monitor the state of the 14 V power module, often referred to as the accessory DC power control module.

The status circuit functions much like the F Terminal circuit on a generator equipped vehicle. A high side driver in the 14 V power module applies a duty cycled voltage to the ECM. The duty cycle indicates the 14 V power module internal temperature and operational condition.

The control circuit functions much like the L Terminal circuit on a generator equipped vehicle. A high side driver in the ECM applies a duty cycled voltage to the 14 V power module. The duty cycle controls the 14 V power module output.

The 14 V power module generates more power as the commanded duty cycle increases.

Reference Information

Schematic Reference

- *Starting and Charging Schematics on page 9-8*
- *Hybrid/EV Controls Schematics on page 9-54*

Connector End View Reference

Component Connector End Views on page 11-455

Description and Operation

Accessory DC Power Control Module Description and Operation on page 9-192

Electrical Information Reference

- *Circuit Testing on page 11-871*
- *Testing for Intermittent Conditions and Poor Connections on page 11-877*

DTC Type Reference

Powertrain Diagnostic Trouble Code (DTC) Type Definitions on page 6-92

Circuit/System Verification

1. Vehicle ON.
2. Verify DTC P1F59, P1F5A, P1F5B, P1F5D, or P1F5E is not set.

⇒ **If any of the DTCs are set**

Refer to *Diagnostic Trouble Code (DTC) List - Vehicle on page 6-92*.

⇓ **If the DTCs are not set**

3. Vehicle OFF. Measure and record the C1 battery voltage at the C1 battery terminals. The C1 battery voltage should stabilize between 12.4 and 12.8 V within a few minutes of turning the vehicle OFF.

⇒ **If not within the specified range**

Refer to *Battery Inspection/Test on page 9-15*.

⇓ **If within the specified range**

4. Vehicle ON, accessories OFF.
5. Measure and record the C1 battery voltage at the C1 battery terminals. The voltage should be at least 1 V greater than the voltage measured in step 1 but less than 15 V.

⇒ **If not within the specified range**

Refer to Circuit/System Testing.

⇓ **If within the specified range**

6. All OK.

Circuit/System Testing

1. Vehicle ON.
2. Verify DTC P1F59, P1F5A, P1F5B, P1F5D, or P1F5E is not set.

⇒ **If any of the DTCs are set**

Refer to *Diagnostic Trouble Code (DTC) List - Vehicle on page 6-92*.

⇓ **If the DTCs are not set**

3. Verify that no K1 14 V Power Module or B18 Battery Current Sensor DTCs are set that would cause a charging system concern.

⇒ **If an applicable DTC is set**

Refer to *Diagnostic Trouble Code (DTC) List - Vehicle on page 6-92*.

⇓ **If no applicable DTCs are set**

4. Vehicle OFF.
5. Test for 12.4 V or greater at room temperature across the C1 Battery terminals.

⇒ **If not within the specified range**

Refer to *Battery Inspection/Test on page 9-15*.

⇓ **If within the specified range**

6. Connect a carbon pile tester to the C1 Battery.
7. Vehicle ON, turn all accessories off. Observe the voltage reading on the tester. The voltage should read between 12.6–15.5 V.
8. Adjust the carbon pile tester so that the Low - Voltage Battery Current parameter on the 14 V Power Module data list of the ECM is reading 160 amps.

9. Verify the voltage reading remains between 12.6–15.5 V.

⇒ **If not within the specified range**

9.1. Disconnect the X2 harness connector at the 14 V power module, vehicle ON.

9.2. Test for 3.0–5.5 V between the control circuit terminal X2-01 and ground.

⇒ If less than 3.0 V

9.2.1. Vehicle OFF, disconnect the harness connectors at the K20 ECM.

9.2.2. Test for less than 2 Ω in the control circuit end to end.

⇒ If greater the 2 Ω, repair the open/high resistance in the circuit.

⇓ If less than 2 Ω

9.2.3. Replace the K20 ECM.

⇓ If within 3.0–5.5 V

9.3. Replace the K1 14 V Power Module.

⇓ **If within the specified range**

10. All OK.

Repair Instructions

Perform the *Diagnostic Repair Verification on page 6-123* after completing the repair.

Control Module References on page 6-3 for K1 14 V Power Module, often referred to as the Accessory DC Power Control Module, replacement, programming, and setup.

Repair Instructions

Engine Control Module Replacement

Removal Procedure

Danger: Always perform the High Voltage Disabling procedure prior to servicing any High Voltage component or connection. Personal Protection Equipment (PPE) and proper procedures must be followed.

The High Voltage Disabling procedure includes the following steps:

- ***Identify how to disable high voltage.***
- ***Identify how to test for the presence of high voltage.***
- ***Identify condition under which high voltage is always present and personal protection equipment (PPE) and proper procedures must be followed.***

Before working on any high voltage system, be sure to wear the following Personal Protection Equipment:

- ***Safety glasses with appropriate side shields when within 15 meters (50 feet) of the vehicle, either indoors or outdoors.***
- ***Certified and up-to-date Class "0" Insulation gloves rated at 1000V with leather protectors.***
  - ***Visually and functionally inspect the gloves before use.***
  - ***Wear the Insulation gloves with leather protectors at all times when working with the high voltage battery assembly, whether the system is energized or not.***

Failure to follow the procedures may result in serious injury or death.

1. Disconnect the battery negative cable. Refer to *Battery Negative Cable Disconnection and Connection on page 9-20*.

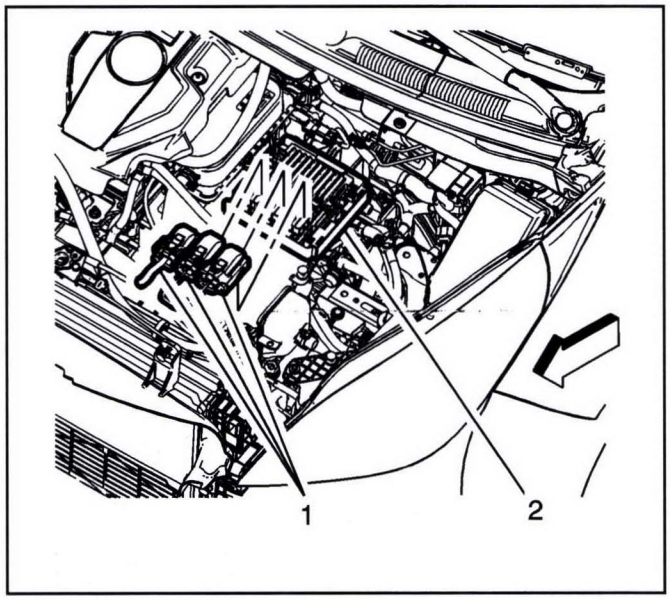

3232226

2. Remove the engine control module (ECM) connectors (1) from the ECM module (2).

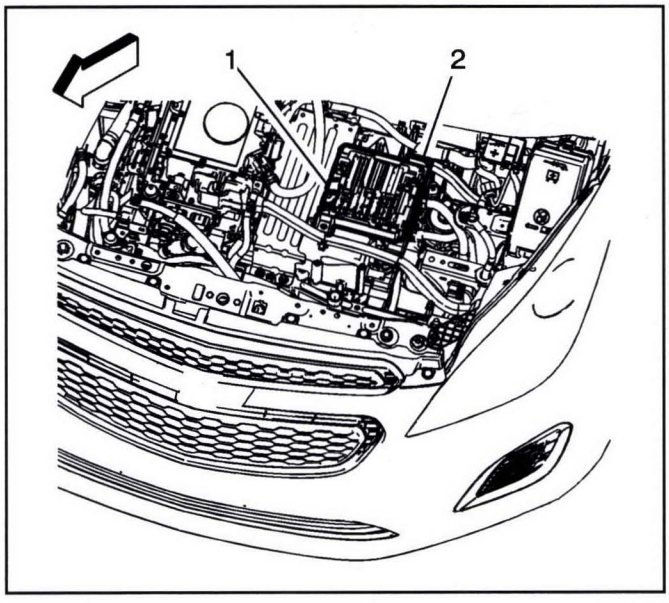

3240558

3. Push down on the release tab (1) and remove the ECM module (2) from the bracket.

Installation Procedure

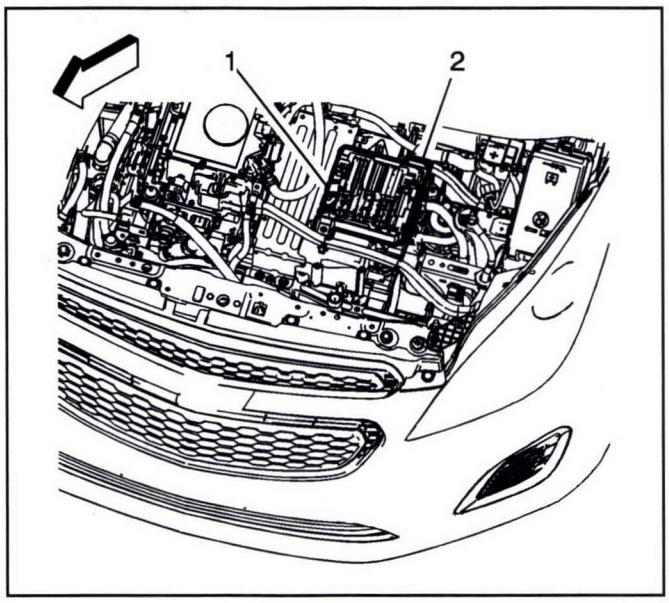

3240558

1. Install the ECM module (2) into the retaining bracket.

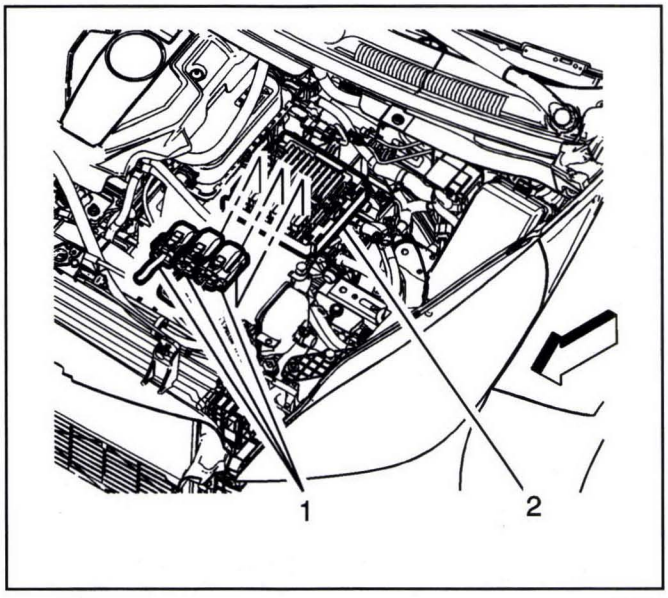

3232226

2. Install the ECM connectors (1) to the ECM module (2).
3. Connect the battery negative cable. Refer to *Battery Negative Cable Disconnection and Connection on page 9-20*.

Engine Control Module Bracket Replacement

Removal Procedure

Danger: Always perform the High Voltage Disabling procedure prior to servicing any High Voltage component or connection. Personal Protection Equipment (PPE) and proper procedures must be followed.

The High Voltage Disabling procedure includes the following steps:

- ***Identify how to disable high voltage.***
- ***Identify how to test for the presence of high voltage.***
- ***Identify condition under which high voltage is always present and personal protection equipment (PPE) and proper procedures must be followed.***

Before working on any high voltage system, be sure to wear the following Personal Protection Equipment:

- ***Safety glasses with appropriate side shields when within 15 meters (50 feet) of the vehicle, either indoors or outdoors.***
- ***Certified and up-to-date Class "0" Insulation gloves rated at 1000V with leather protectors.***
  - ***Visually and functionally inspect the gloves before use.***
  - ***Wear the Insulation gloves with leather protectors at all times when working with the high voltage battery assembly, whether the system is energized or not.***

Failure to follow the procedures may result in serious injury or death.

1. Disconnect the battery negative cable. Refer to *Battery Negative Cable Disconnection and Connection on page 9-20*.

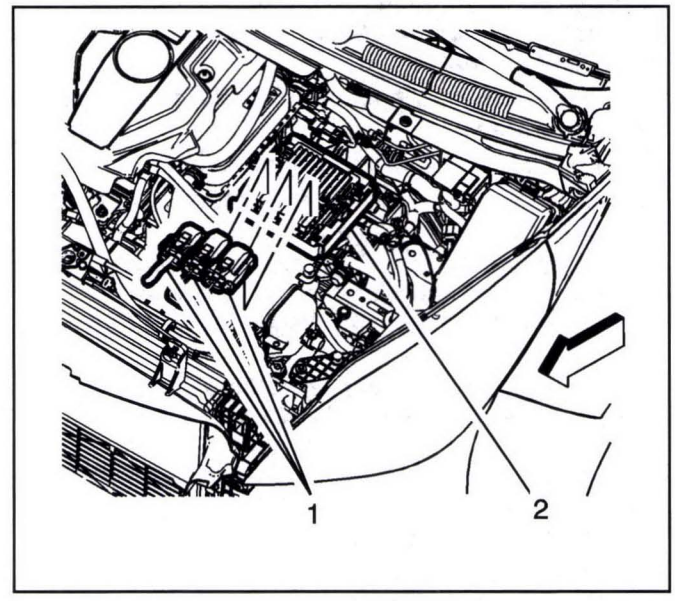

3232226

2. Remove the engine control module (ECM) connectors (1) from the ECM module (2).

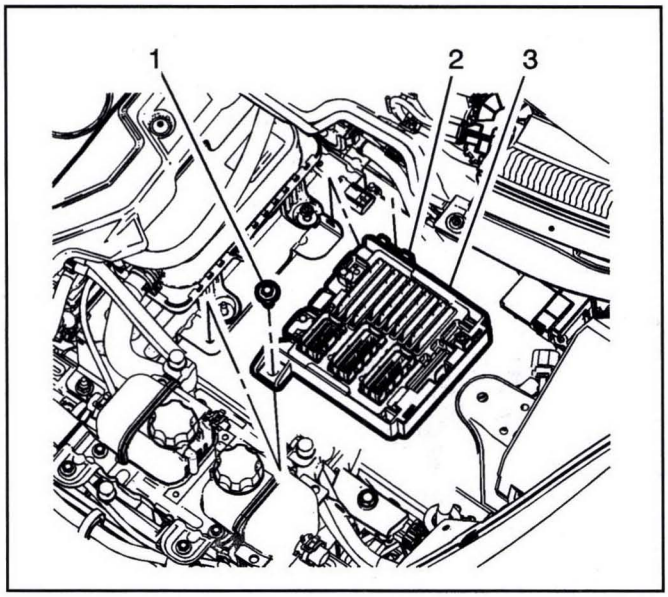

3232225

3. Remove the ECM module bracket fastener (1) and release the retaining tab (2) that secures the ECM module bracket (3) to the heater coolant heater bracket.
4. Remove the ECM module and bracket (3), from the vehicle.

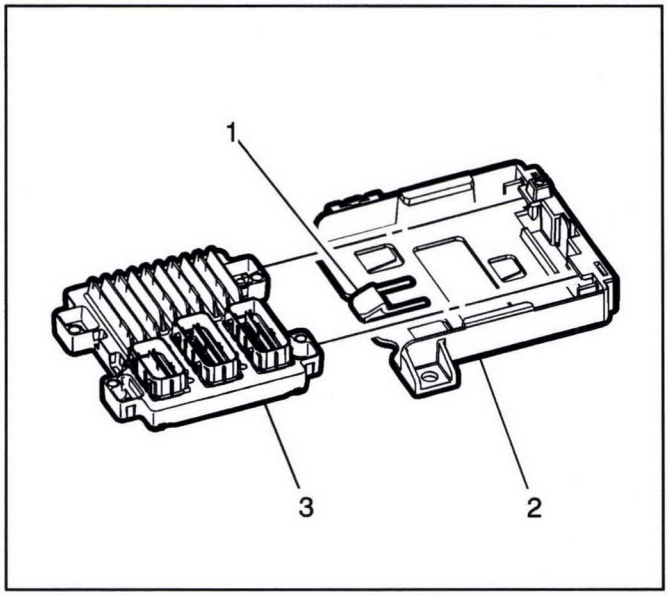

3232224

5. Push down the retaining tab (1) and remove the ECM module (3) from the ECM module bracket (2).

Installation Procedure

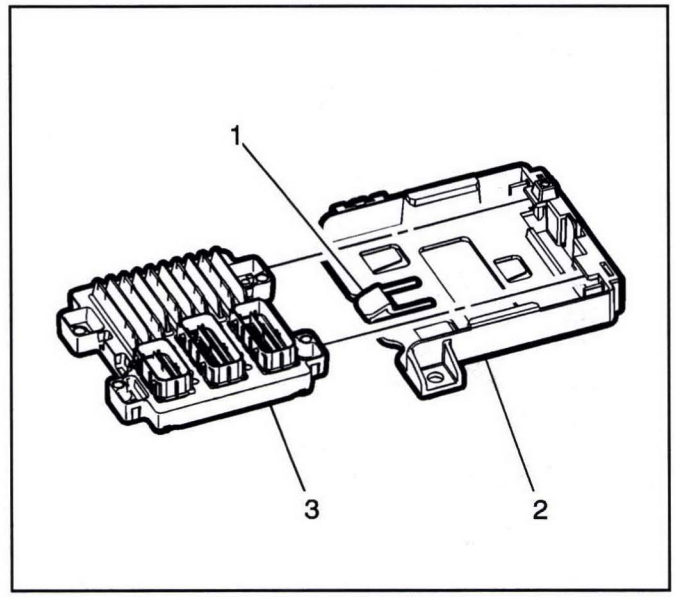

3232224

1. Install the ECM module (2) into the ECM module bracket.

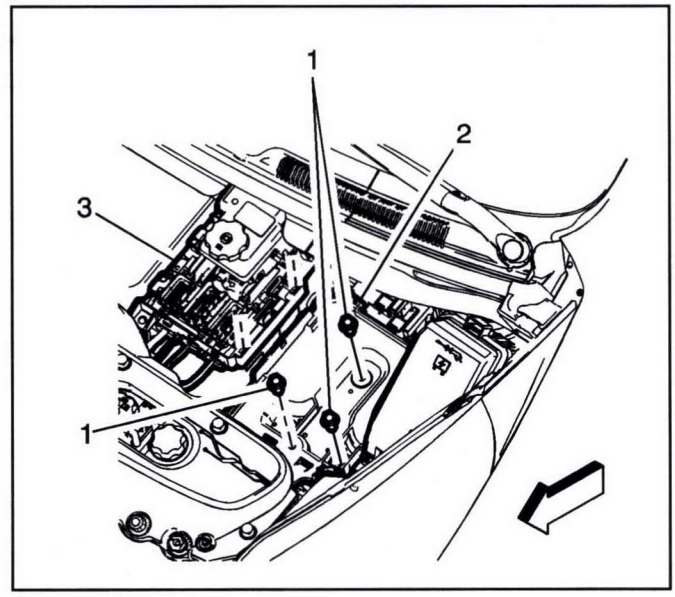

3216629

2. Attach the ECM module bracket retainers (3) to the battery tray (2).

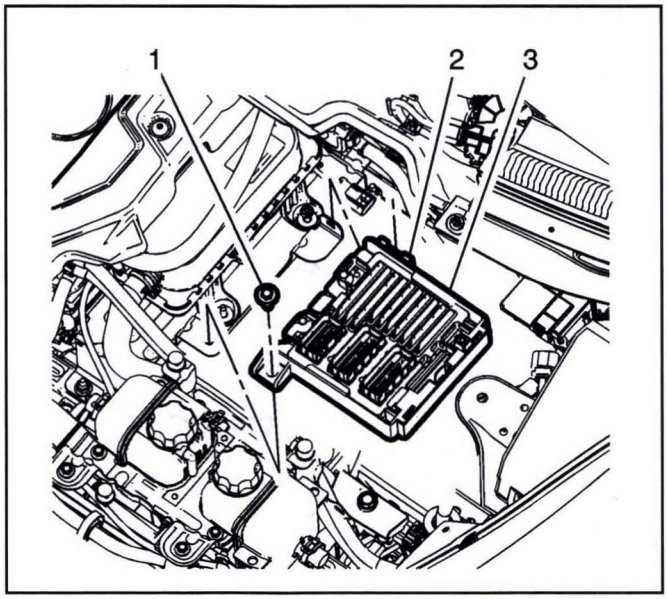

3232225

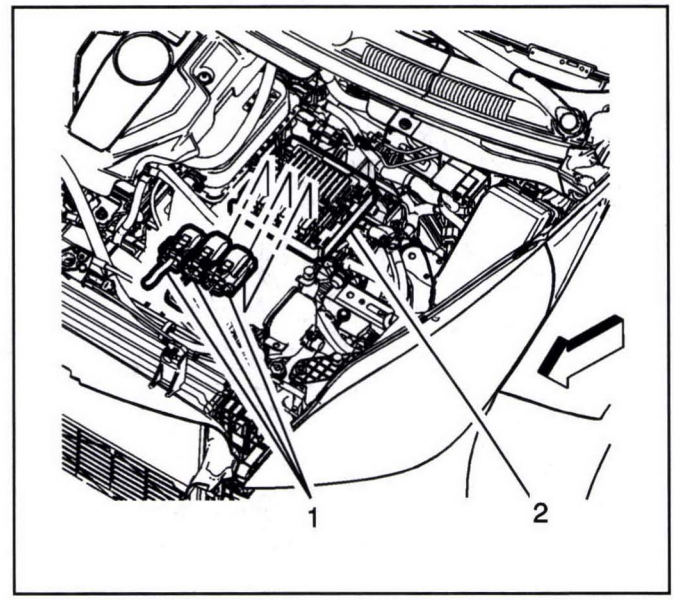

3232226

Caution: Refer to *Fastener Caution on page 0-8*.

3. Install the ECM module bracket to the heater coolant heater bracket with the fastener (1) and retaining tab (2). Tighten the fastener (1) to **9** N•m **(80 lb in)**.
4. Install the ECM connectors (1) to the ECM module (2).
5. Connect the battery negative cable. Refer to *Battery Negative Cable Disconnection and Connection on page 9-20*.

High Voltage Disconnect Circuit Connector Cover Replacement

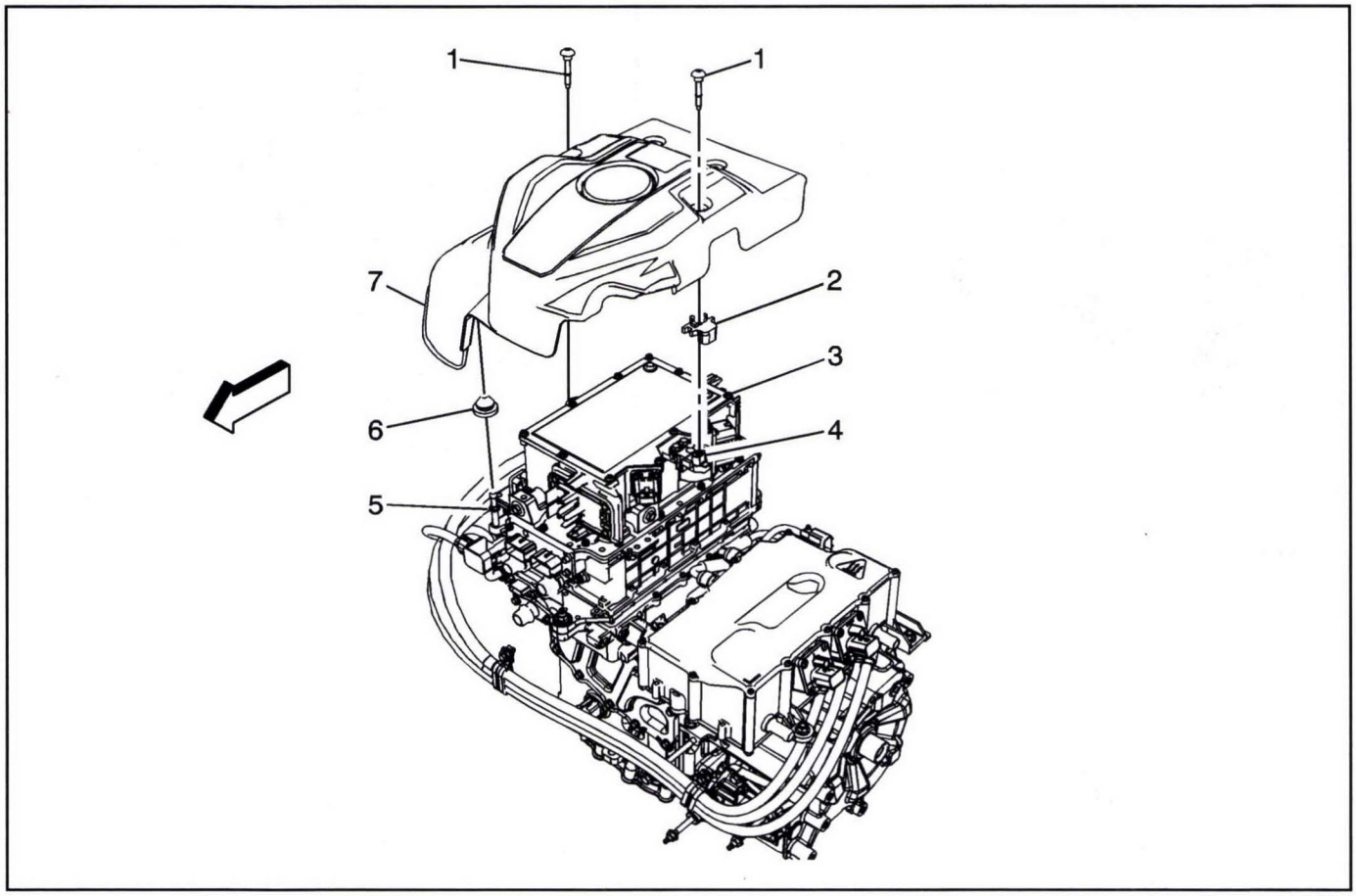

3232323

High Voltage Disconnect Circuit Connector Cover Replacement

Callout	Component Name
Danger: Always perform the High Voltage Disabling procedure prior to servicing any High Voltage component or connection. Personal Protection Equipment (PPE) and proper procedures must be followed. ***The High Voltage Disabling procedure includes the following steps:*** • ***Identify how to disable high voltage.*** • ***Identify how to test for the presence of high voltage.*** • ***Identify condition under which high voltage is always present and personal protection equipment (PPE) and proper procedures must be followed.*** ***Before working on any high voltage system, be sure to wear the following Personal Protection Equipment:*** • ***Safety glasses with appropriate side shields when within 15 meters (50 feet) of the vehicle, either indoors or outdoors.*** • ***Certified and up-to-date Class "0" Insulation gloves rated at 1000V with leather protectors.*** – ***Visually and functionally inspect the gloves before use.*** – ***Wear the Insulation gloves with leather protectors at all times when working with the high voltage battery assembly, whether the system is energized or not.*** ***Failure to follow the procedures may result in serious injury or death.*** **Preliminary Procedure** 1. Remove the front compartment front sight shield. Refer to *Front Compartment Front Sight Shield Replacement on page 3-39*.	
1	High Voltage Disconnect Circuit Cover Fasteners (Qty: 2) **Tighten** 9 N•m (80 lb in)
2	High Voltage Connector Junction Block
3	High Voltage Battery Disconnect Control Module
4	High Voltage Disconnect Circuit Cover Disabling Connector
5	Stud Ball
6	High Voltage Disconnect Circuit Cover Grommet
7	High Voltage Disconnect Circuit Cover **Procedure** 1. Remove the high voltage disconnect circuit cover fasteners (1). 2. Lift the left side cover to remove the disabling high voltage junction block (2), from the disabling switch connector (4). 3. Remove the high voltage disconnect circuit cover grommet (6), from the stud ball (5). 4. Remove the high voltage disconnect circuit cover (7).

High Voltage Battery Disconnect Control Module Module Replacement (with quick charge)

Removal Procedure

Danger: Always perform the High Voltage Disabling procedure prior to servicing any High Voltage component or connection. Personal Protection Equipment (PPE) and proper procedures must be followed.

The High Voltage Disabling procedure includes the following steps:

- ***Identify how to disable high voltage.***
- ***Identify how to test for the presence of high voltage.***
- ***Identify condition under which high voltage is always present and personal protection equipment (PPE) and proper procedures must be followed.***

Before working on any high voltage system, be sure to wear the following Personal Protection Equipment:

- ***Safety glasses with appropriate side shields when within 15 meters (50 feet) of the vehicle, either indoors or outdoors.***
- ***Certified and up-to-date Class "0" Insulation gloves rated at 1000V with leather protectors.***
  - ***Visually and functionally inspect the gloves before use.***
  - ***Wear the Insulation gloves with leather protectors at all times when working with the high voltage battery assembly, whether the system is energized or not.***

Failure to follow the procedures may result in serious injury or death.

1. Disable the high voltage system. Refer to *High Voltage Disabling on page 9-363*.
2. Remove the high voltage disconnect circuit cover. Refer to *High Voltage Disconnect Circuit Connector Cover Replacement on page 9-174*.

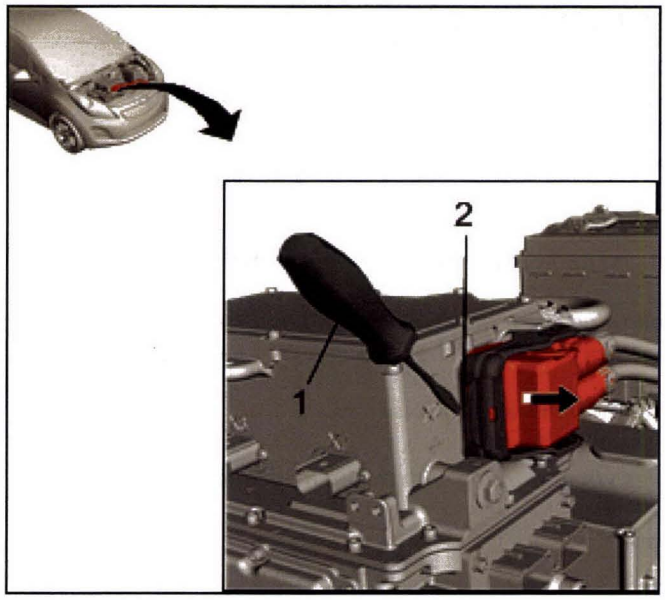

3794643

3. Using a flat blade screwdriver (1), pry the edge of the connector handle lock (2) from the holding tab.
4. Release the connector handle lock by rotating the connector handle forward.

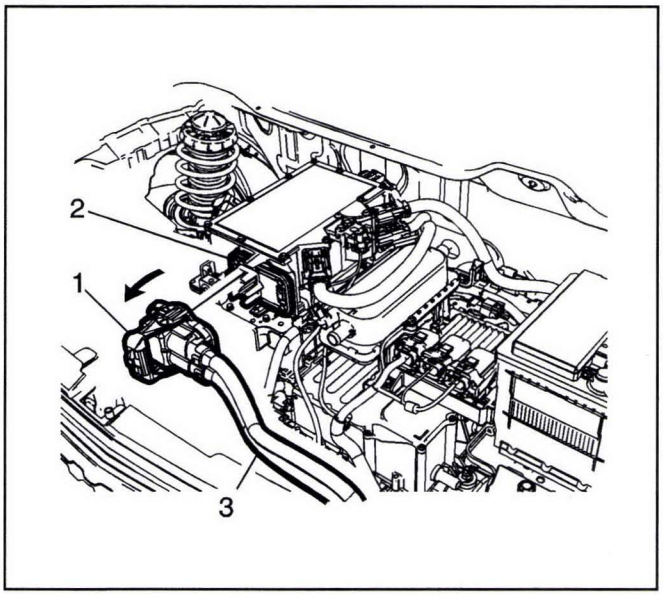

3232273

5. With the connector handle (1) in the release position, disconnect the high voltage charger connector (3), from the high voltage disconnect control module (2).

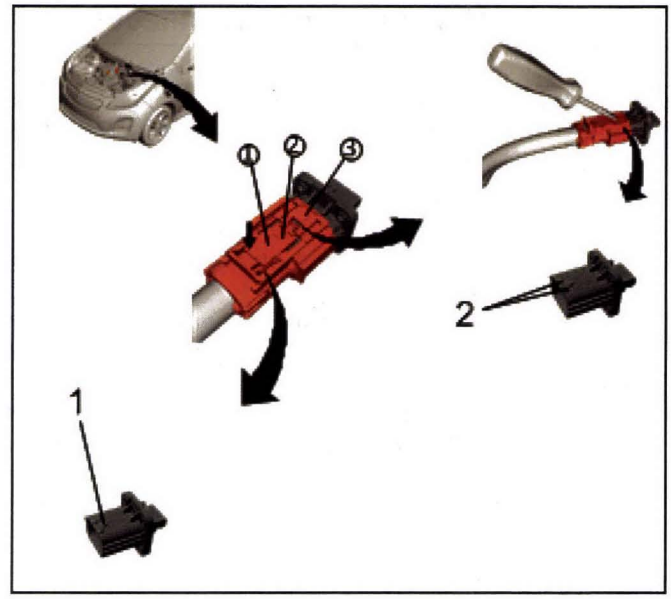

3794634

6. Disconnect the 2-stage high voltage connectors in the following sequence:
   - Push down on the connector tab and release the connector from the first stage connector tab (1).
   - Using a flat blade screwdriver inserted into the connector as shown, release the second stage safety catch, from the 2 connector retaining tabs (2).

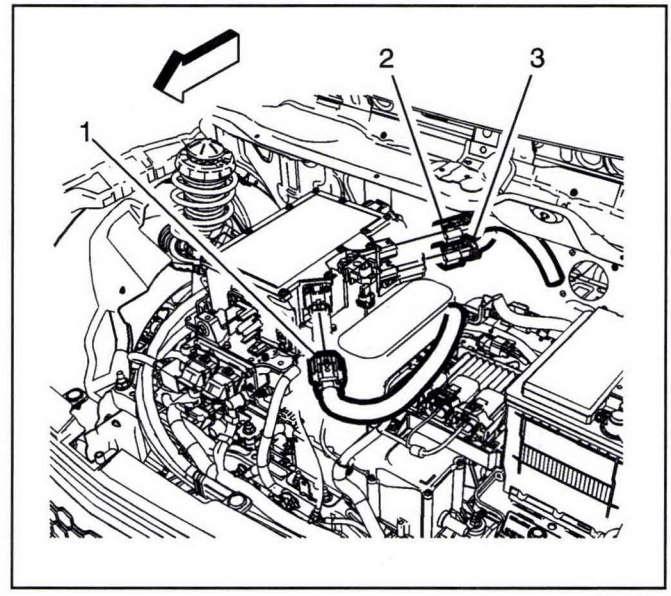

3232270

7. After releasing the 2-stage safety connectors, remove the A/C compressor connector (1) from the high voltage disconnect control module.
8. Remove the heater coolant heater connector (2) and the accessory DC power control module connector (3), from the high voltage disconnect control module.

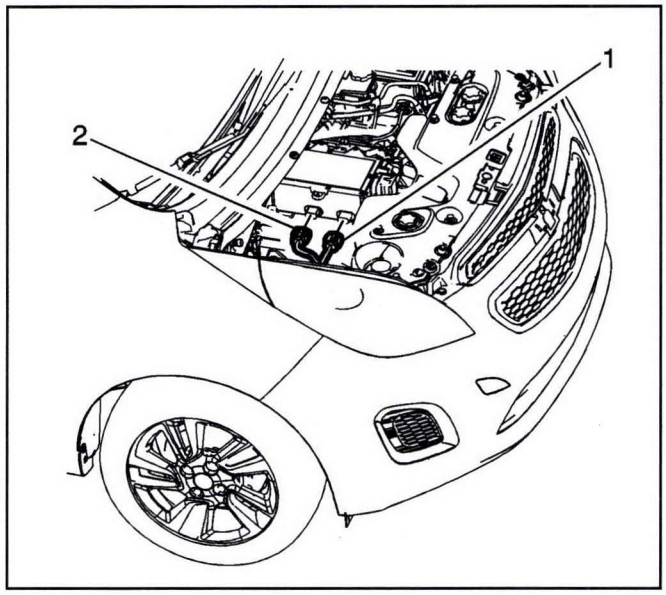

3232269

9. Disconnect the X7 connector (1) and the X6 connector (2), from the high voltage disconnect control module.

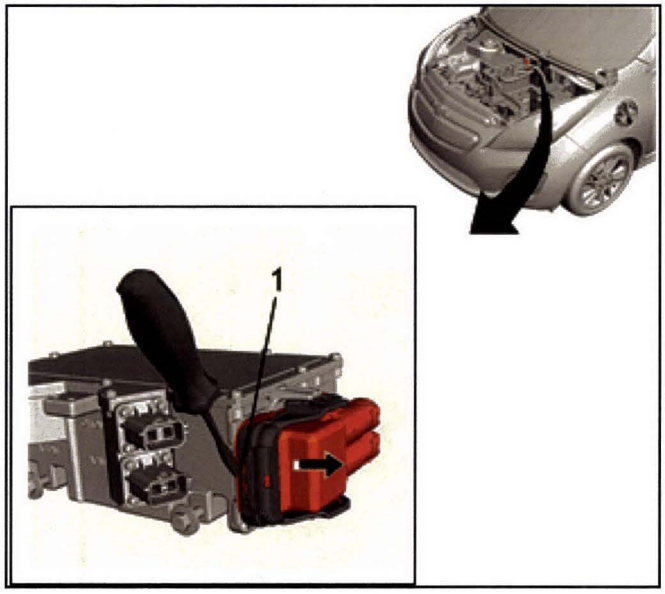

3794638

10. Using a flat blade screwdriver, pry the edge of the connector handle lock (1) from the holding tab.
11. Slide the handle forward to release the connector.

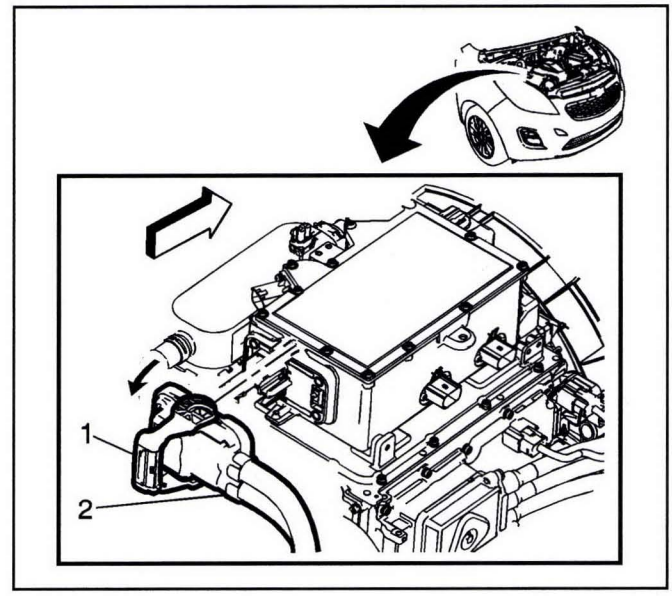

3232268

12. With the connector handle (1) in the release position, remove the generator drive motor power inverter module connector (2), from the back of the high voltage disconnect control module.

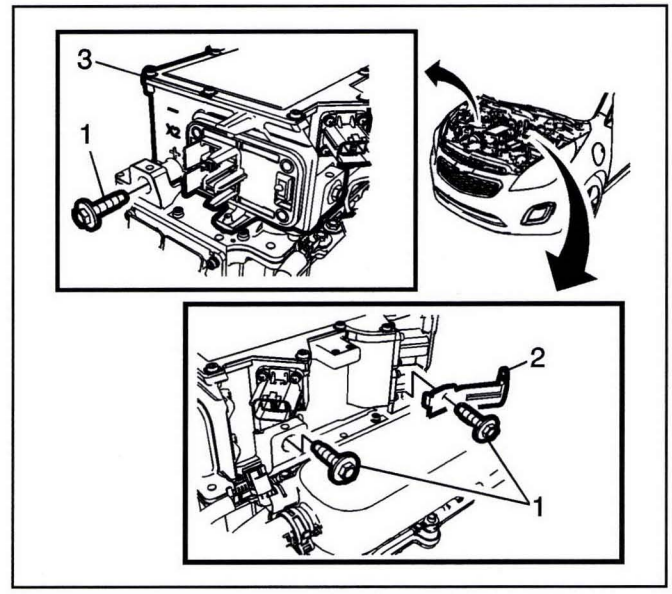

3232267

13. Remove the high voltage disconnect control module mounting fasteners (1), along with the engine wiring harness bracket (2), from the high voltage disconnect control module (3).

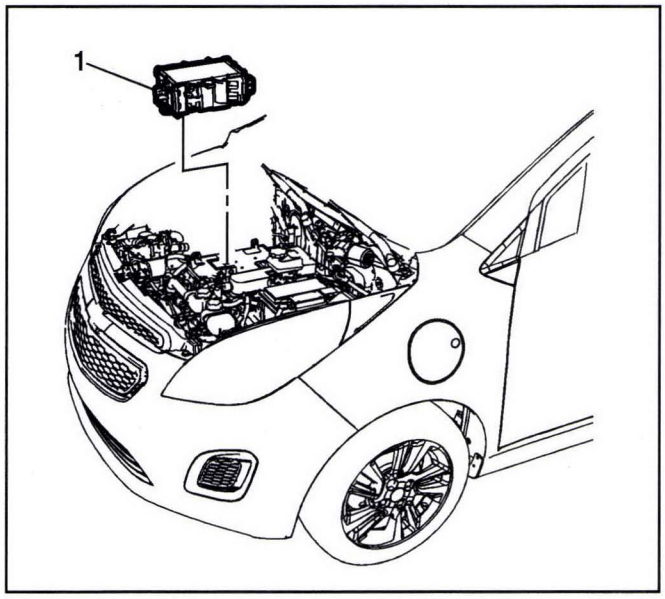

3232264

14. Remove the high voltage disconnect control module (1) from the vehicle.

Installation Procedure

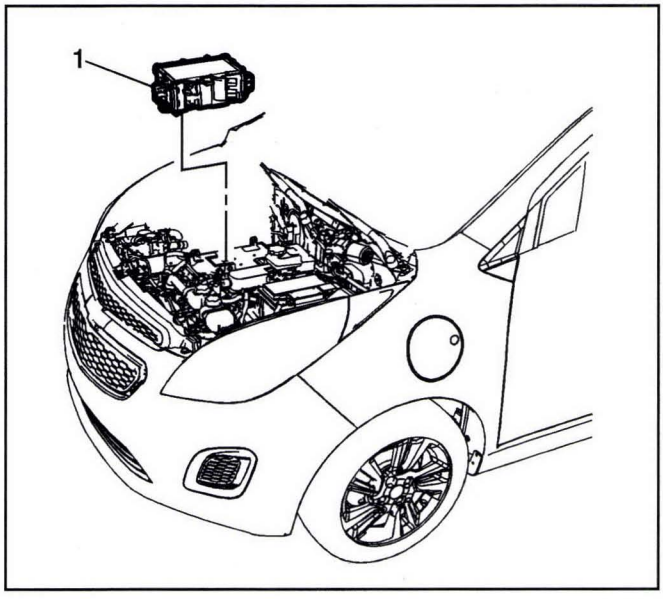

3232264

1. Install the high voltage disconnect control module (1) into position.

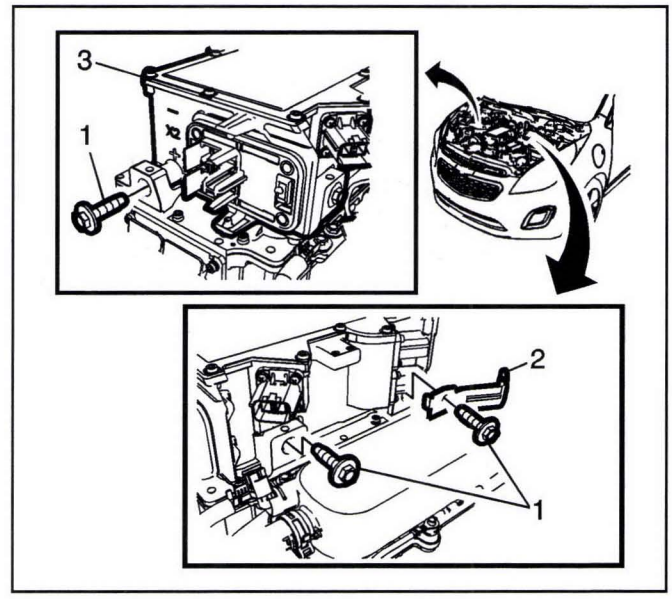

3232267

Caution: Refer to *Fastener Caution on page 0-8*.

2. Install the rear engine wiring harness bracket (2), to the high voltage disconnect control module (3), and tighten the mounting fasteners (1) to **22** N•m **(16 lb ft)**.

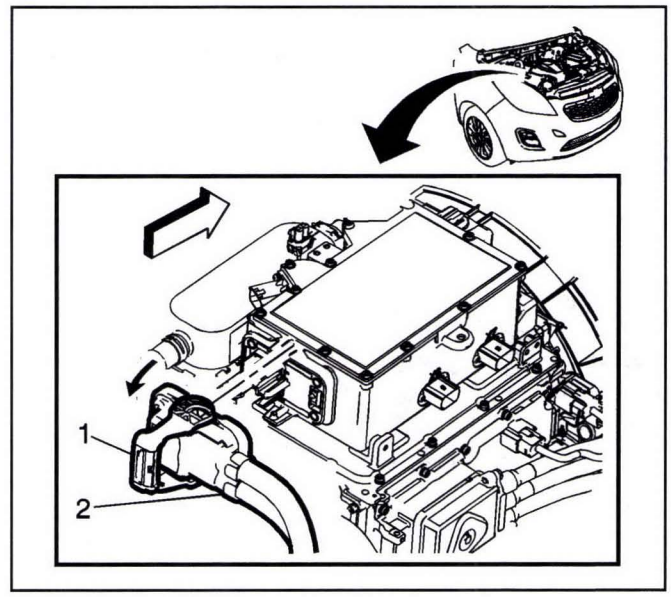

3232268

3. Connect the generator drive motor power inverter module connector (2) to the high voltage disconnect control module.

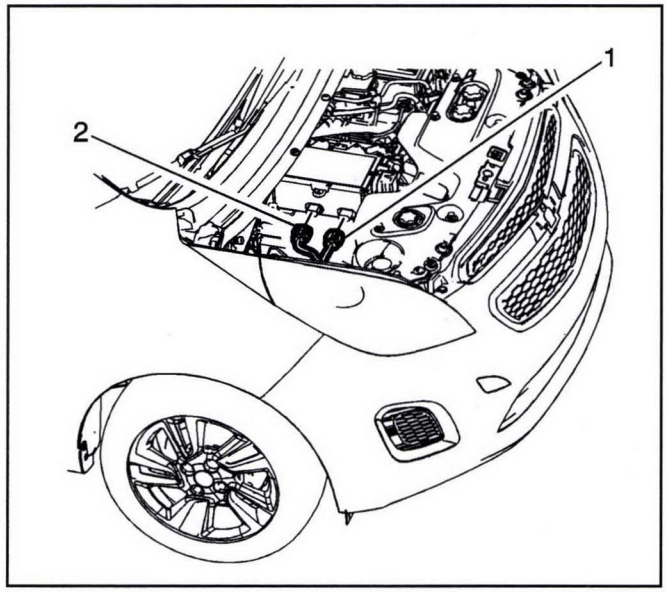

3232269

4. Connect the X7 connector (1) and the X6 connector (2), to the high voltage disconnect control module.

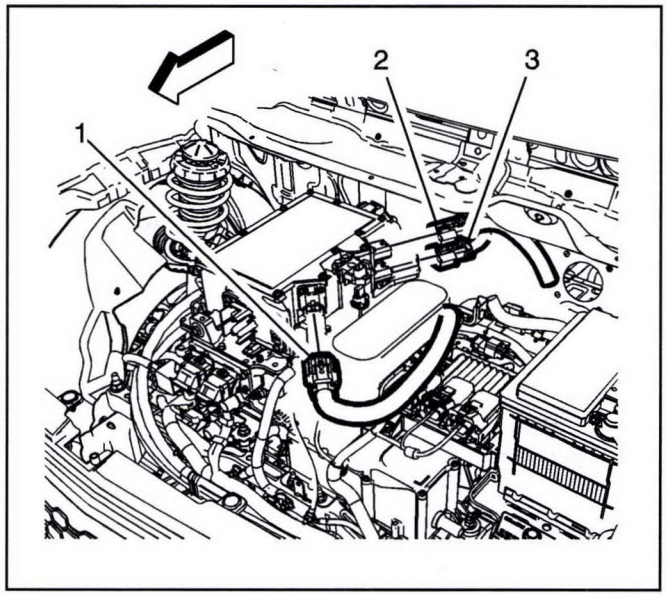

3232270

5. Connect the A/C compressor connector (1) to the high voltage disconnect control module.
6. Connect the accessory DC power control module connector (3) and the heater coolant heater connector (2), to the high voltage disconnect control module.

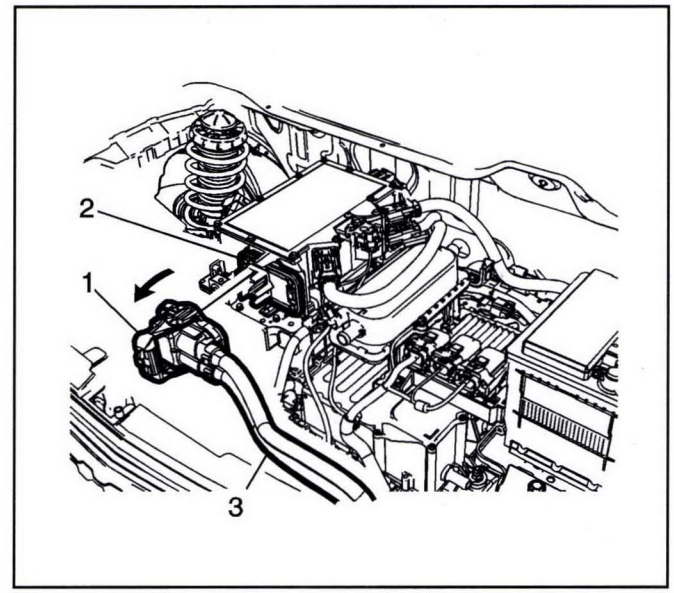

3232273

7. Connect the high voltage charger connector (3) to the high voltage disconnect control module (2).
8. Install the high voltage disconnect circuit cover. Refer to *High Voltage Disconnect Circuit Connector Cover Replacement on page 9-174*.
9. Enable the high voltage system. Refer to *High Voltage Enabling on page 9-367*.

High Voltage Battery Disconnect Control Module Module Replacement (without quick charge)

Removal Procedure

Danger: Always perform the High Voltage Disabling procedure prior to servicing any High Voltage component or connection. Personal Protection Equipment (PPE) and proper procedures must be followed.

The High Voltage Disabling procedure includes the following steps:

- ***Identify how to disable high voltage.***
- ***Identify how to test for the presence of high voltage.***
- ***Identify condition under which high voltage is always present and personal protection equipment (PPE) and proper procedures must be followed.***

Before working on any high voltage system, be sure to wear the following Personal Protection Equipment:

- ***Safety glasses with appropriate side shields when within 15 meters (50 feet) of the vehicle, either indoors or outdoors.***

- ***Certified and up-to-date Class "0" Insulation gloves rated at 1000V with leather protectors.***
  - ***Visually and functionally inspect the gloves before use.***
  - ***Wear the Insulation gloves with leather protectors at all times when working with the high voltage battery assembly, whether the system is energized or not.***

Failure to follow the procedures may result in serious injury or death.

1. Disable the high voltage system. Refer to *High Voltage Disabling on page 9-363*.
2. Remove the high voltage disconnect circuit cover. Refer to *High Voltage Disconnect Circuit Connector Cover Replacement on page 9-174*.

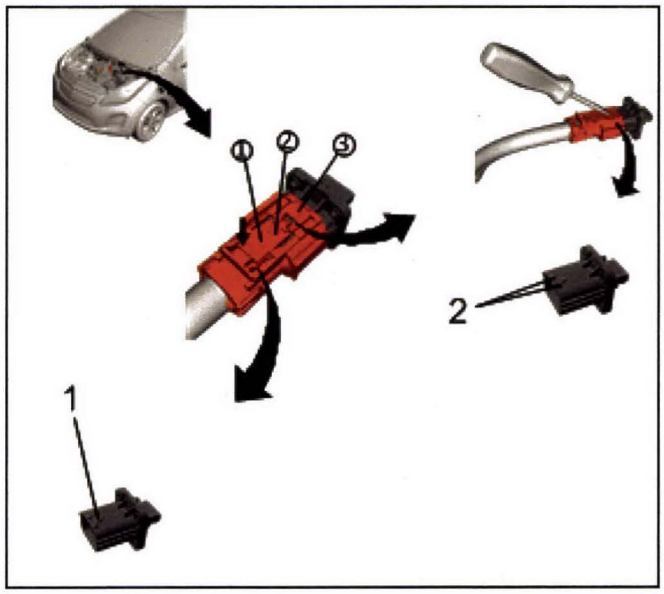

3794634

3. Disconnect the 2-stage high voltage connectors in the following sequence:
   - Push down on the connector tab and release the connector from the first stage connector tab (1).
   - Using a flat blade screwdriver inserted into the connector as shown, release the second stage safety catch, from the 2 connector retaining tabs (2).

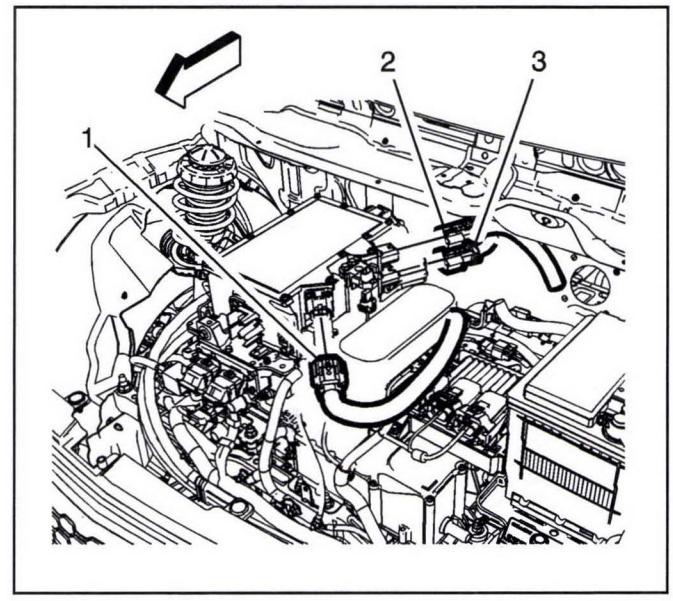

3232270

4. Disconnect the A/C compressor connector (1) from the high voltage disconnect control module.
5. Disconnect the heater coolant heater connector (2) and the accessory DC power control module connector (3), from the high voltage disconnect control module.

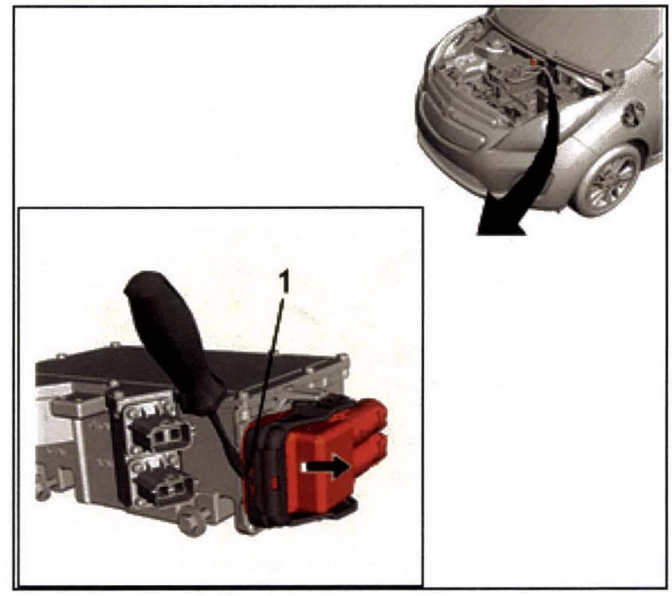

3794638

6. Using a flat blade screwdriver, pry the edge of the connector handle lock (1) from the holding tab.
7. Slide the handle forward to release the connector.

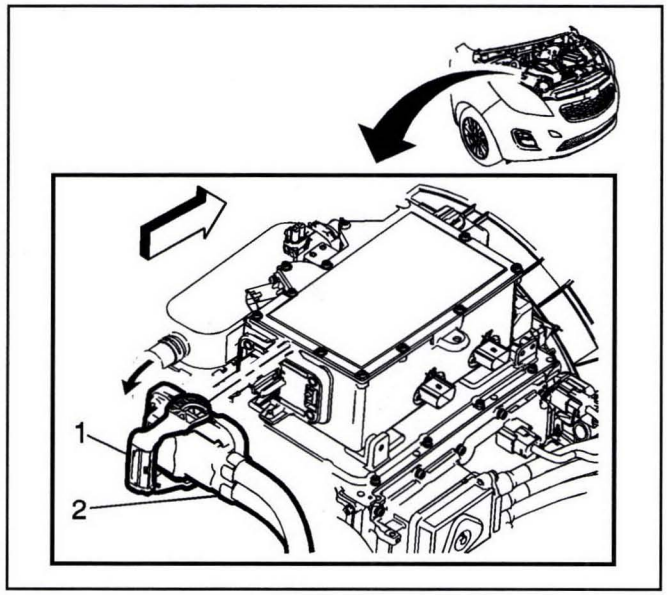

3232268

8. Slide the connector handle (1) forward and remove the generator drive motor power inverter module connector (2), from the back of the high voltage disconnect control module.

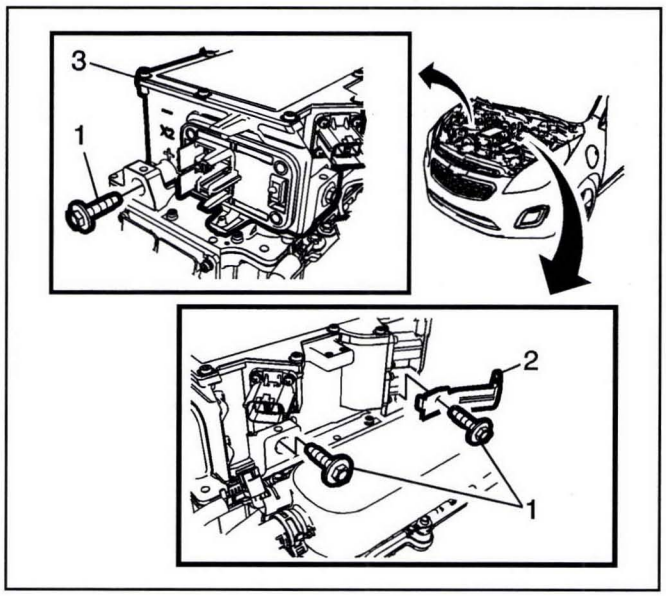

3232267

9. Remove the high voltage disconnect control module mounting fasteners (1), along with the engine wiring harness bracket (2), from the high voltage disconnect control module (3).

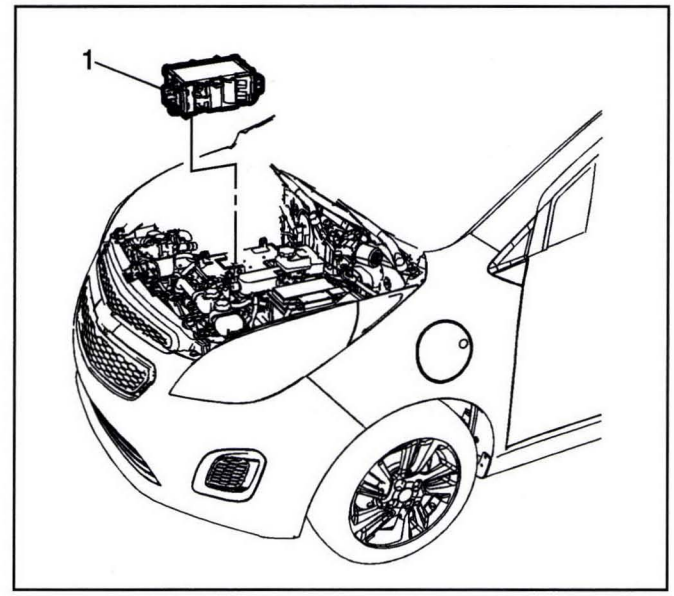

3232264

10. Remove the high voltage disconnect control module (1) from the vehicle.

Installation Procedure

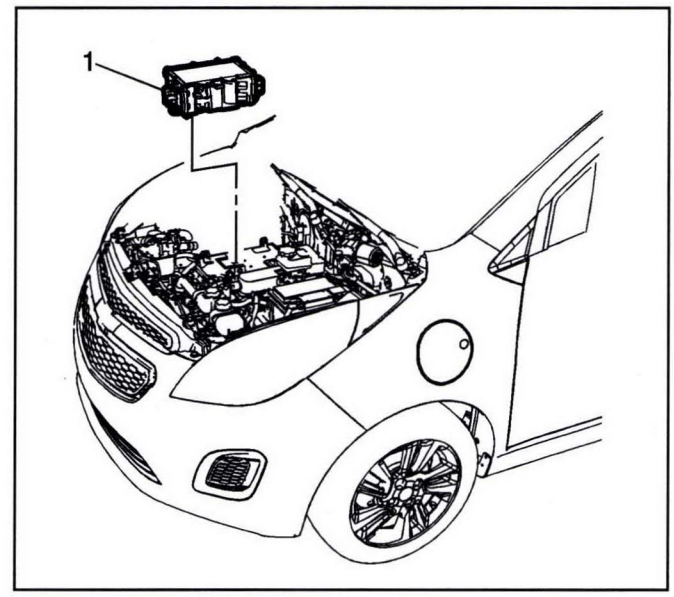

3232264

1. Install the high voltage disconnect control module (1) into position.

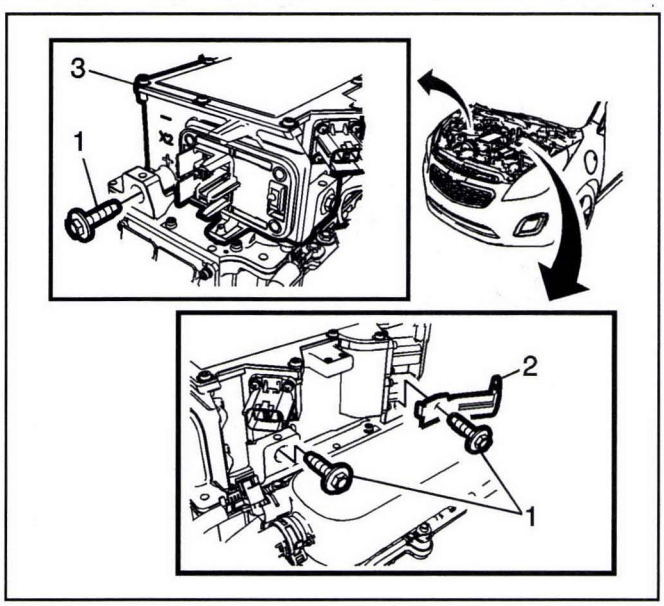

3232267

Caution: Refer to *Fastener Caution on page 0-8*.

2. Install the rear engine wiring harness bracket (2), to the high voltage disconnect control module (3), and tighten the mounting fasteners (1) to **22 N•m (16 lb ft)**.

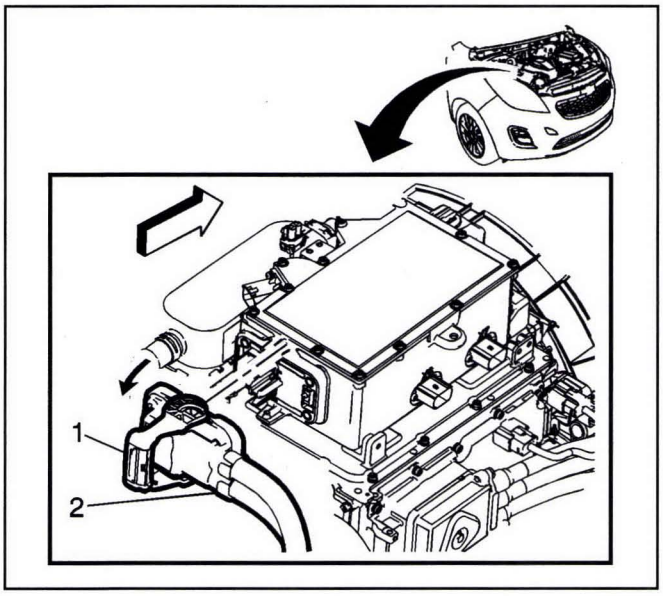

3232268

3. Connect the generator drive motor power inverter module connector (2) to the high voltage disconnect control module.

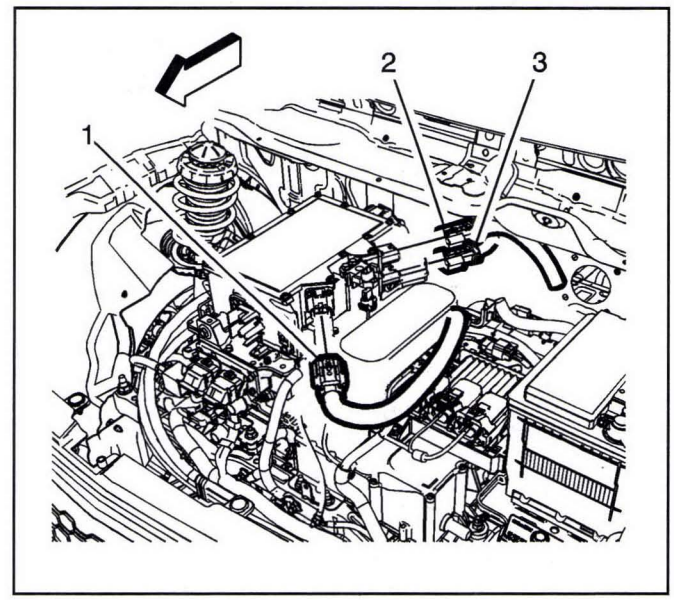

3232270

4. Connect the A/C compressor connector (1) to the high voltage disconnect control module.
5. Connect the accessory DC power control module connector (3) and the heater coolant heater connector (2), to the high voltage disconnect control module.
6. Install the high voltage disconnect circuit cover. Refer to *High Voltage Disconnect Circuit Connector Cover Replacement on page 9-174*.
7. Enable the high voltage system. Refer to *High Voltage Enabling on page 9-367*.

Drive Motor Power Inverter Module 3 Phase Cable Replacement

Removal Procedure

Danger: Always perform the High Voltage Disabling procedure prior to servicing any High Voltage component or connection. Personal Protection Equipment (PPE) and proper procedures must be followed.

The High Voltage Disabling procedure includes the following steps:

- ***Identify how to disable high voltage.***
- ***Identify how to test for the presence of high voltage.***
- ***Identify condition under which high voltage is always present and personal protection equipment (PPE) and proper procedures must be followed.***

Before working on any high voltage system, be sure to wear the following Personal Protection Equipment:

- ***Safety glasses with appropriate side shields when within 15 meters (50 feet) of the vehicle, either indoors or outdoors.***

- ***Certified and up-to-date Class "0" Insulation gloves rated at 1000V with leather protectors.***
  - ***Visually and functionally inspect the gloves before use.***
  - ***Wear the Insulation gloves with leather protectors at all times when working with the high voltage battery assembly, whether the system is energized or not.***

Failure to follow the procedures may result in serious injury or death.

1. Disable the high voltage system. Refer to *High Voltage Disabling on page 9-363*.
2. Remove the drive motor battery charger. Refer to *Drive Motor Battery Charger Replacement on page 9-649*.
3. Remove the high voltage disconnect circuit connector cover. Refer to *High Voltage Disconnect Circuit Connector Cover Replacement on page 9-174*.

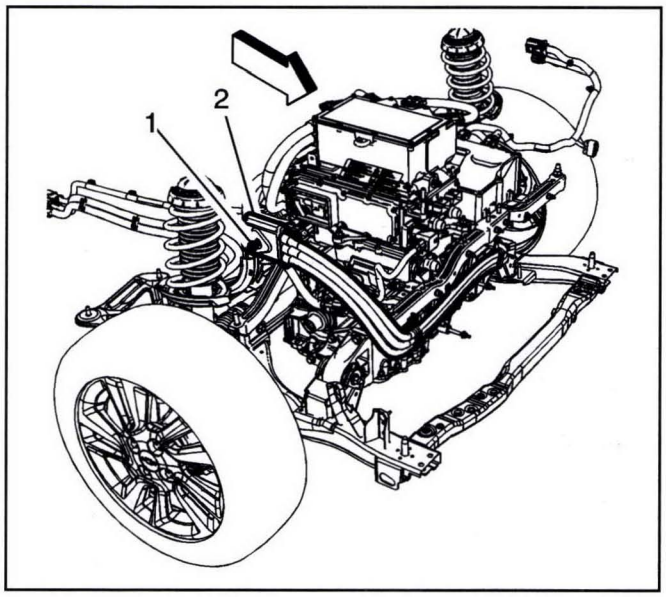

3604554

4. Remove the high voltage connector fastener (1) and remove the connector (2) from the drive motor generator power inverter module.

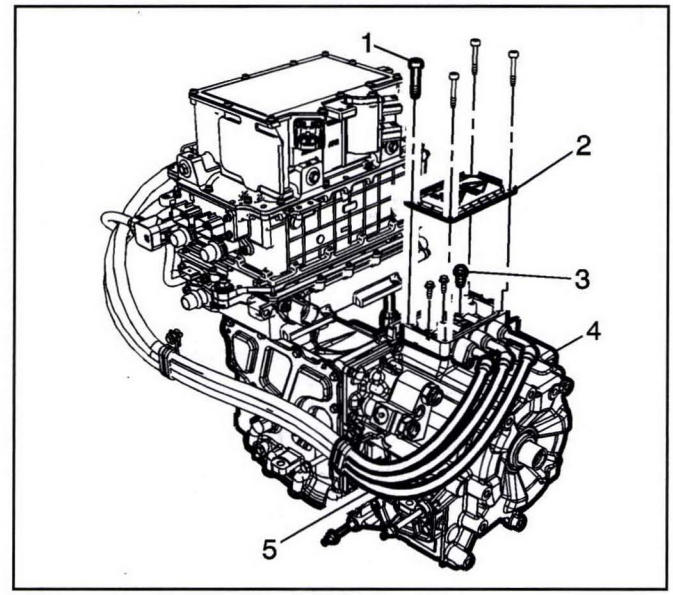

3604549

5. Remove the high voltage cover fasteners (1) and remove the high voltage connector cover (2).
6. Remove the high voltage cable fasteners (3) and remove the high voltage cable (5), from on top of the transmission (4).

   Note: Replace the connector to transmission seal with a NEW seal.

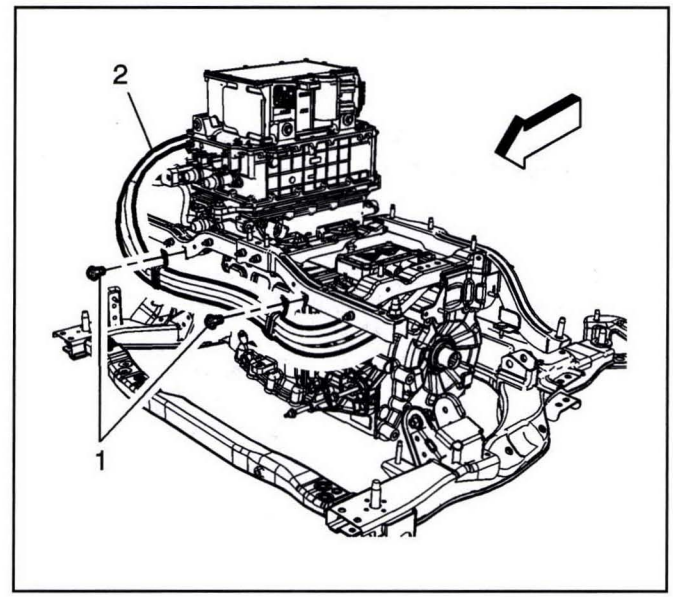

3604552

7. Remove the high voltage cable retainer fasteners (1) and remove the high voltage cable (2) from the vehicle.

Installation Procedure

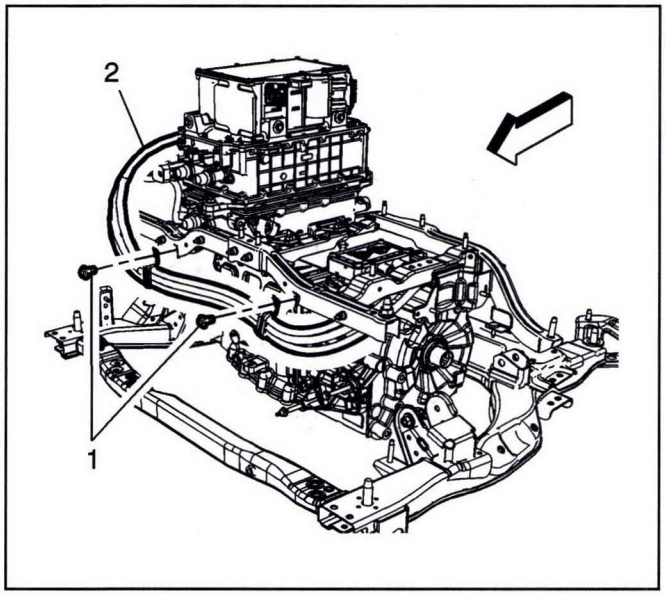

3604552

Caution: Refer to *Fastener Caution on page 0-8*.

1. Install the high voltage cable (2) into position on the frame and tighten the retainer fasteners (1) to **9** N•m **(80 lb in)**.

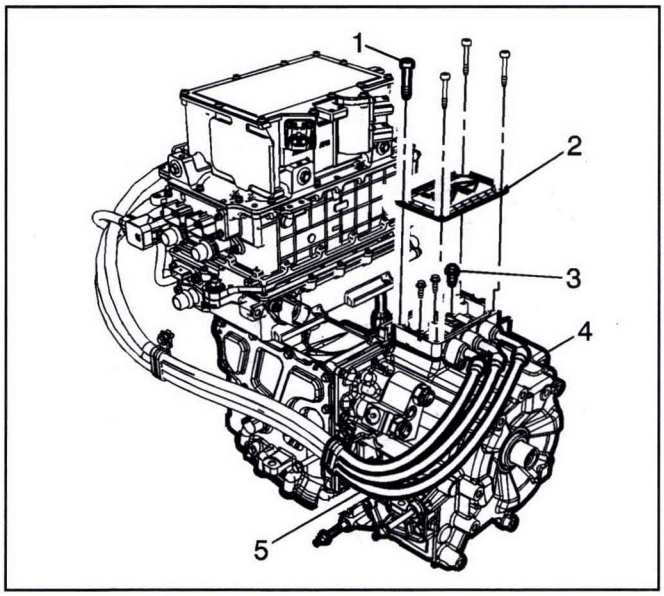

3604549

Note: Replace the connector to transmission seal with a NEW seal.

2. Install the high voltage terminal fasteners (3) and tighten to **9** N•m **(80 lb in)**.
3. Install the high voltage cable cover (2) and tighten the cover fasteners (1) to **9** N•m **(80 lb in)**.

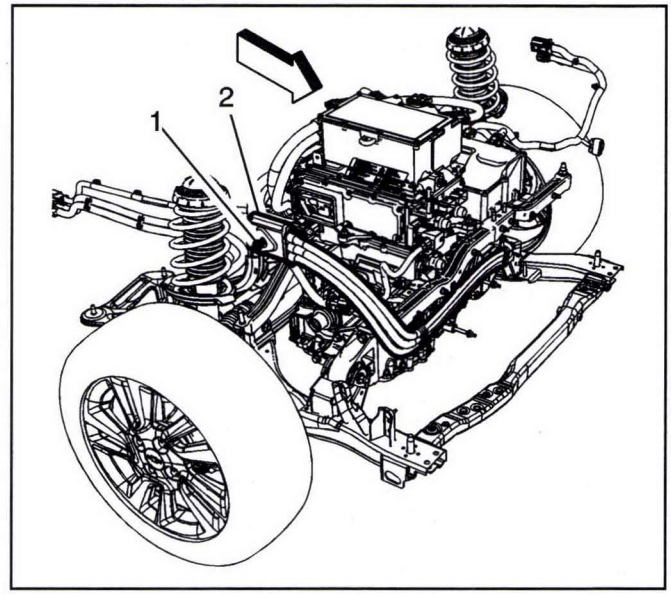

3604554

4. Install the high voltage connector (2) to the drive motor generator power inverter module and tighten the fastener (1) to **9** N•m **(80 lb in)**.
5. Install the drive motor battery charger. Refer to *Drive Motor Battery Charger Replacement on page 9-649*.
6. Install the high voltage disconnect circuit connector cover. Refer to *High Voltage Disconnect Circuit Connector Cover Replacement on page 9-174*.

Drive Motor Generator Power Inverter Module Replacement

Removal Procedure

Danger: Always perform the High Voltage Disabling procedure prior to servicing any High Voltage component or connection. Personal Protection Equipment (PPE) and proper procedures must be followed.

The High Voltage Disabling procedure includes the following steps:

- ***Identify how to disable high voltage.***
- ***Identify how to test for the presence of high voltage.***
- ***Identify condition under which high voltage is always present and personal protection equipment (PPE) and proper procedures must be followed.***

Before working on any high voltage system, be sure to wear the following Personal Protection Equipment:

- ***Safety glasses with appropriate side shields when within 15 meters (50 feet) of the vehicle, either indoors or outdoors.***

- ***Certified and up-to-date Class "0" Insulation gloves rated at 1000V with leather protectors.***
  - ***Visually and functionally inspect the gloves before use.***
  - ***Wear the Insulation gloves with leather protectors at all times when working with the high voltage battery assembly, whether the system is energized or not.***

Failure to follow the procedures may result in serious injury or death.

1. Disable the high voltage system. Refer to *High Voltage Disabling on page 9-363*.
2. Remove the high voltage disconnect circuit cover. Refer to *High Voltage Disconnect Circuit Connector Cover Replacement on page 9-174*.
3. Remove the high voltage battery disconnect control module. Refer to *High Voltage Battery Disconnect Control Module Module Replacement (with quick charge) on page 9-175* or *High Voltage Battery Disconnect Control Module Module Replacement (without quick charge) on page 9-179*.

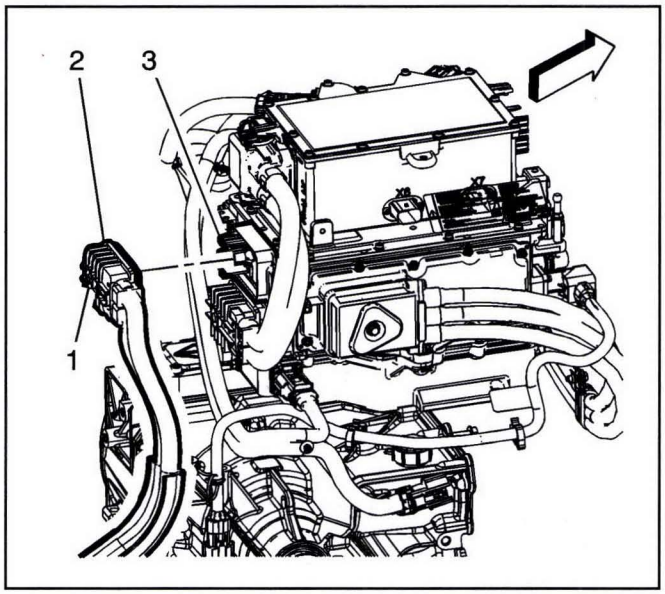

3232206

4. Loosen the fastener (1) and disconnect 300 volt high voltage connector (2), from the drive motor generator power inverter module (3).

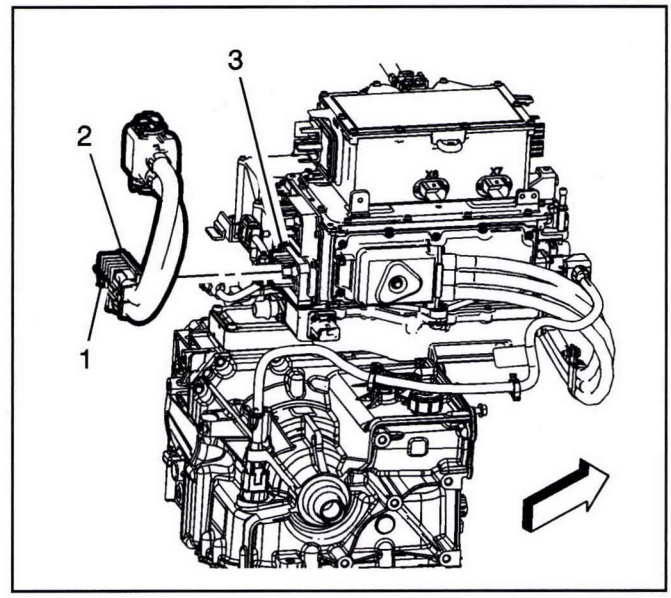

3232263

5. Loosen the fastener (1) and disconnect the 300 volt high voltage connector (2), from the drive motor generator power inverter module (3).

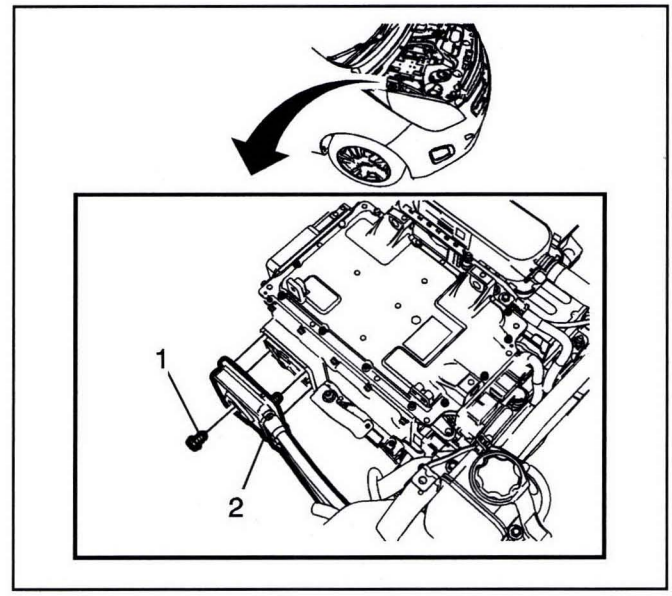

3232258

6. Loosen the fastener (1) and disconnect the transmission 3 phase connector (2), from the drive motor generator power inverter module.
7. Remove and discard the transmission 3 phase connector seal if damaged.

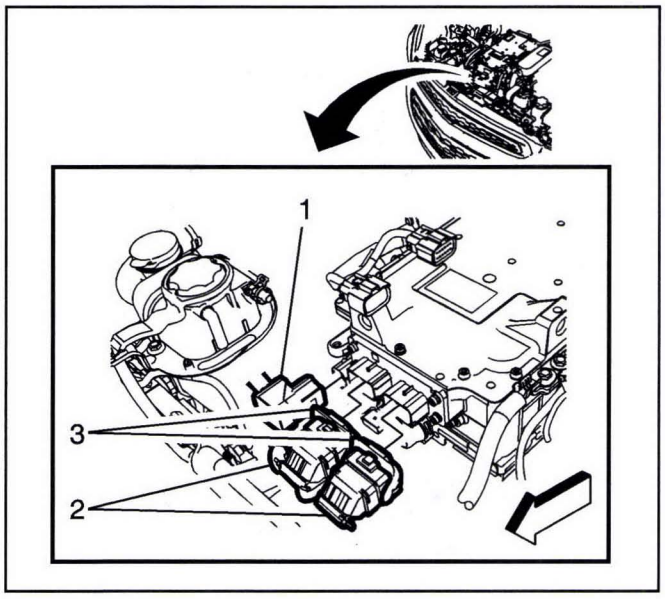

3232260

8. Release the engine wiring harness connector handles (3) and disconnect the engine wiring harness connectors (2), from the drive motor generator power inverter module.
9. Disconnect the transmission fluid pump cable connector (1), from the drive motor generator power inverter module.
10. Remove the electric differential drive motor power inverter module cooling hose. Refer to *Electric Differential Drive Motor Power Inverter Module Cooling Hose Replacement (PE TPIM to LTR) on page 9-270*.
11. Remove the generator control module coolant hose. Refer to *Generator Control Module Coolant Hose Replacement (PE From APM TO TPIM) on page 9-298*.

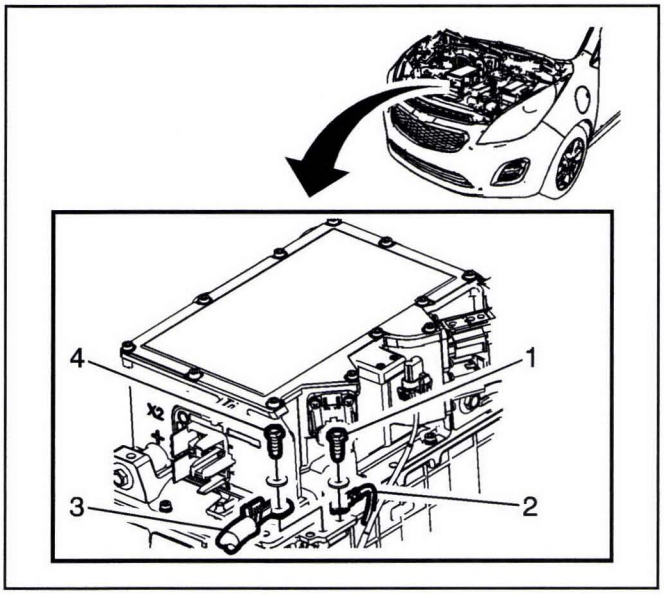

3232256

12. Remove the fastener (1) and the engine wiring harness terminal (2), from the drive motor generator power inverter module case ground.
13. Remove the fastener (4) and the battery negative cable terminal (3), from the case ground.

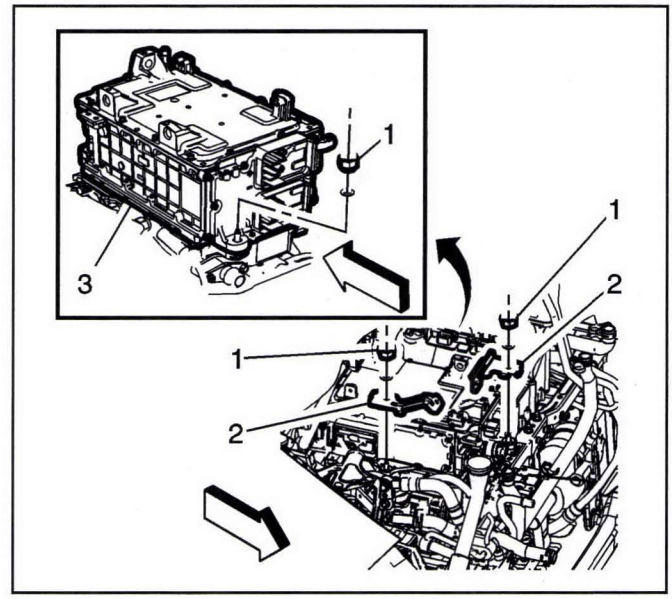

3232253

Note: Note the position and location of the brackets.

14. Remove the drive motor generator power inverter module fasteners (1) and the engine wiring harness brackets (2).

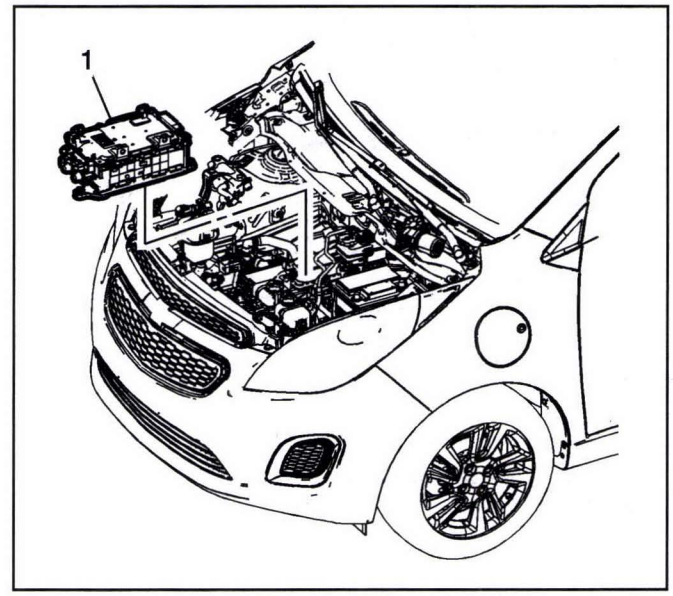

3232252

15. With the aid of a second technician, remove the drive motor generator power inverter module (1) from the vehicle.

Installation Procedure

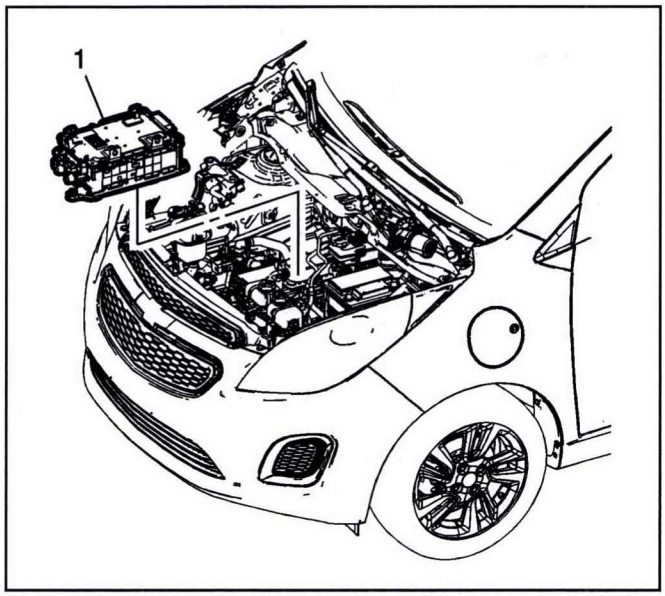

3232252

1. With the help of a second technician, install the drive motor generator power inverter module (1) into position.

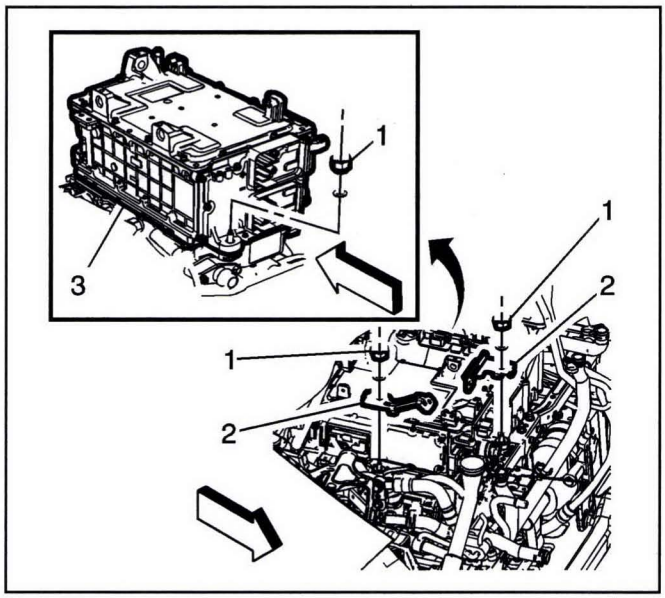

3232253

Caution: Refer to *Fastener Caution on page 0-8*.

2. Install the engine wiring harness brackets (2) , in the position shown, and tighten the fasteners (1) to **22** N•m **(16 lb ft)**.

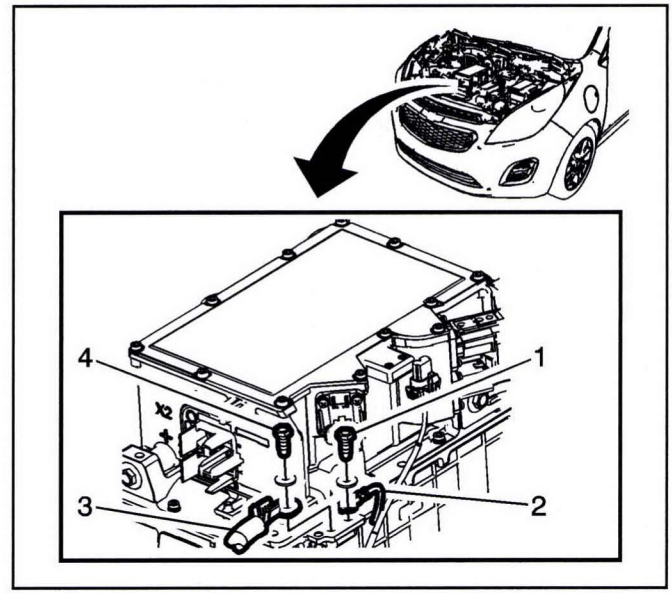

3232256

Note: Critical high voltage fastener. Perform second torque verification check following re-assembly.

3. Install the battery negative cable terminal (3), to the generator motor power inverter module case ground, and tighten the fastener (4) to **9** N•m **(80 lb in)**.

   Note: Critical high voltage fastener. Perform second torque verification check following re-assembly.

4. Install the engine wiring harness terminal (2), to the generator motor power inverter module case ground, and tighten the fastener (1) to **9** N•m **(80 lb in)**.
5. Install the generator control module coolant hose. Refer to *Generator Control Module Coolant Hose Replacement (PE From APM TO TPIM) on page 9-298*.
6. Install the electric differential drive motor power inverter module cooling hose. Refer to *Electric Differential Drive Motor Power Inverter Module Cooling Hose Replacement (PE TPIM to LTR) on page 9-270*.

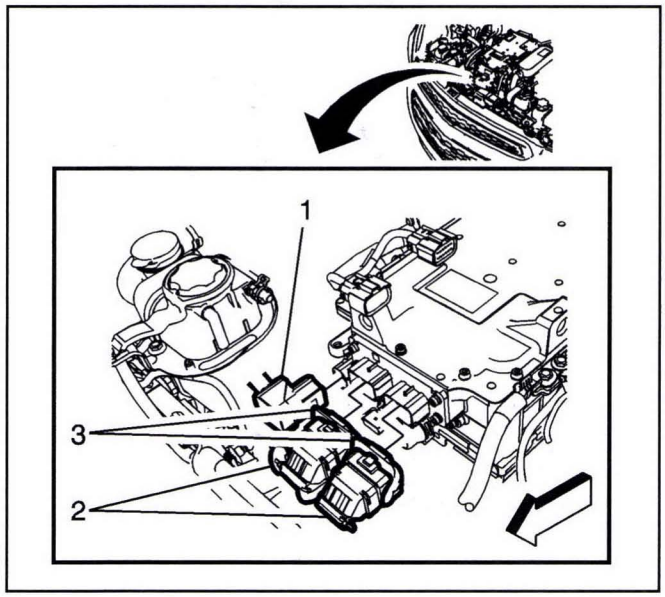

3232260

7. Connect the transmission fluid pump cable connector (1) and the 2 engine wiring harness connectors (2), to the drive motor generator power inverter module.

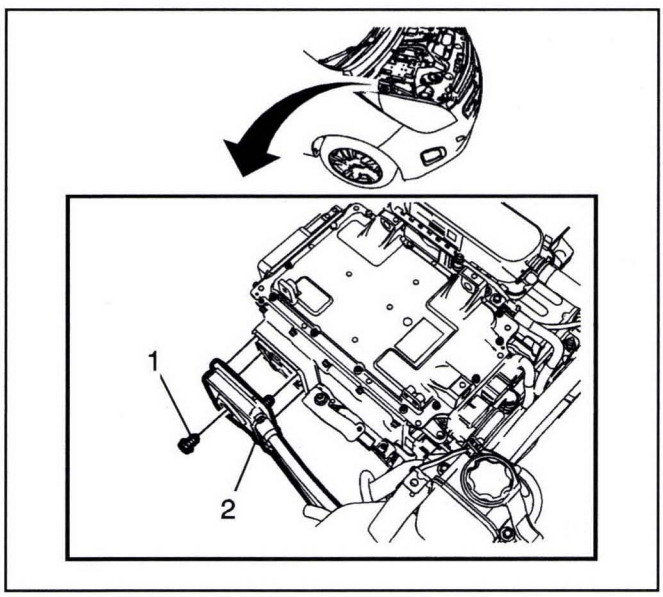

3232258

8. Connect the transmission 3 phase cable (2) to the side of the drive motor generator power inverter module. Tighten the connector fastener (1) to **9** N•m **(80 lb in)**.

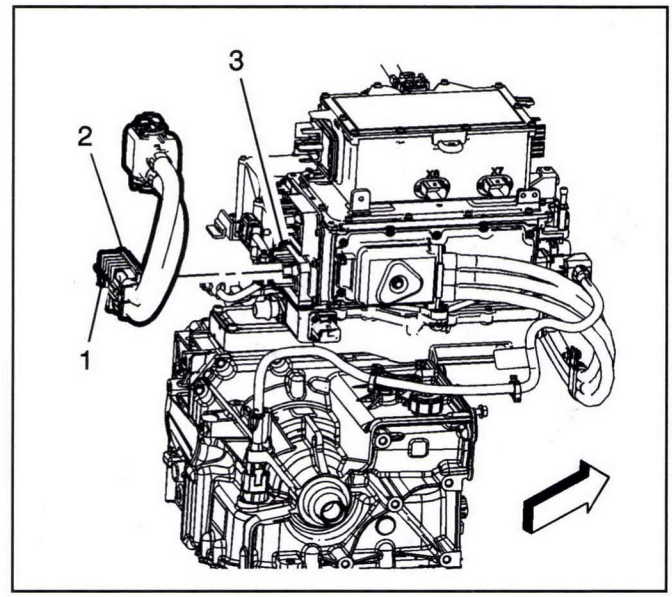

3232263

9. Connect the 300 volt high voltage cable (2) to the drive motor generator power inverter module (3) and tighten the connector fastener (1) to **9** N•m **(80 lb in)**.

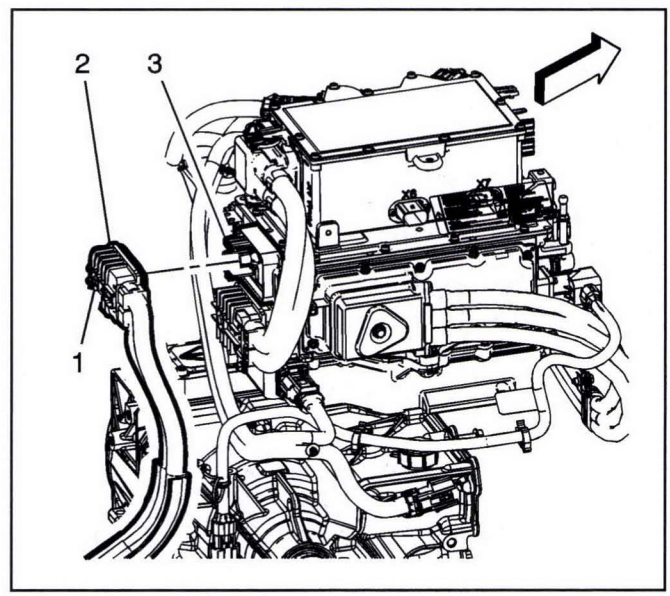

3232206

10. Connect the 300 volt high voltage connector (2), with a NEW seal, to the drive motor generator power inverter module (3). Tighten the connector fastener (1) to **9** N•m **(80 lb in)**.
11. Install the high voltage battery disconnect control module. Refer to *High Voltage Battery Disconnect Control Module Module Replacement (with quick charge) on page 9-175* or *High Voltage Battery Disconnect Control Module Module Replacement (without quick charge) on page 9-179*.
12. Install the high voltage disconnect circuit cover. Refer to *High Voltage Disconnect Circuit Connector Cover Replacement on page 9-174*.
13. Enable the high voltage system. Refer to *High Voltage Enabling on page 9-367*.

14. For control module programming and setup procedures, refer to *Control Module References on page 6-3*.

Accessory DC Power Control Module Replacement

Removal Procedure

Danger: Always perform the High Voltage Disabling procedure prior to servicing any High Voltage component or connection. Personal Protection Equipment (PPE) and proper procedures must be followed.

The High Voltage Disabling procedure includes the following steps:

- ***Identify how to disable high voltage.***
- ***Identify how to test for the presence of high voltage.***
- ***Identify condition under which high voltage is always present and personal protection equipment (PPE) and proper procedures must be followed.***

Before working on any high voltage system, be sure to wear the following Personal Protection Equipment:

- ***Safety glasses with appropriate side shields when within 15 meters (50 feet) of the vehicle, either indoors or outdoors.***
- ***Certified and up-to-date Class "0" Insulation gloves rated at 1000V with leather protectors.***
  - ***Visually and functionally inspect the gloves before use.***
  - ***Wear the Insulation gloves with leather protectors at all times when working with the high voltage battery assembly, whether the system is energized or not.***

Failure to follow the procedures may result in serious injury or death.

1. Disable the high voltage system. Refer to *High Voltage Disabling on page 9-363*.
2. Remove the high voltage disconnect circuit cover. Refer to *High Voltage Disconnect Circuit Connector Cover Replacement on page 9-174*.
3. Remove the high voltage battery disconnect control module. Refer to *High Voltage Battery Disconnect Control Module Module Replacement (with quick charge) on page 9-175* or *High Voltage Battery Disconnect Control Module Module Replacement (without quick charge) on page 9-179*.
4. Remove the drive motor generator power inverter module. Refer to *Drive Motor Generator Power Inverter Module Replacement on page 9-184*.
5. Remove the generator control module coolant hose at the front of the APM module. Refer to *Generator Control Module Coolant Hose Replacement (PE From APM TO TPIM) on page 9-298*.

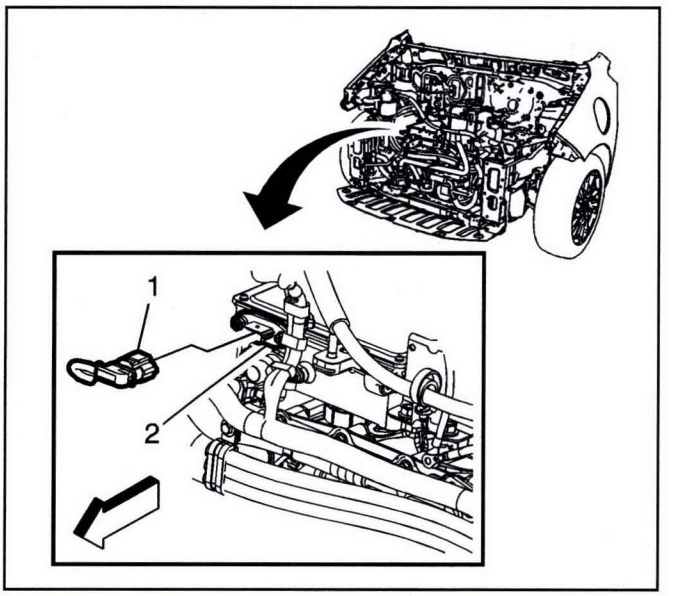

3239594

6. Disconnect the engine harness connector (1) from the accessory DC power control (APM) module (2).

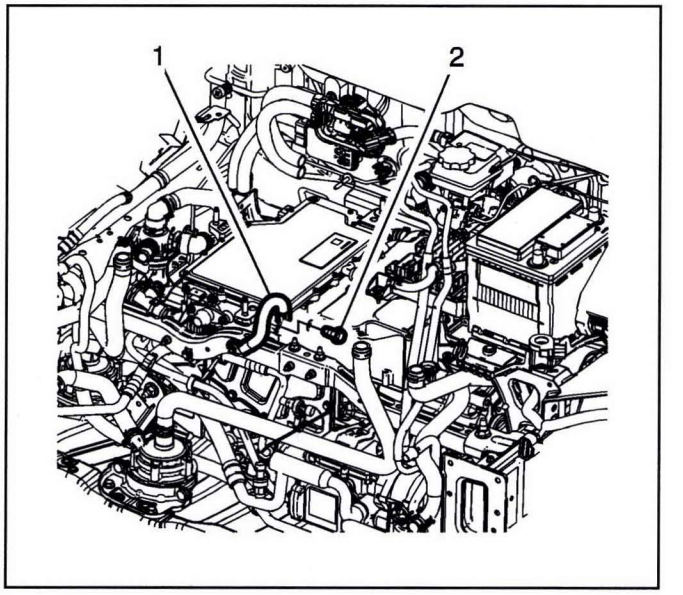

3232234

7. Remove the APM ground cable fastener (2) and remove the APM ground cable (1), from the APM module.

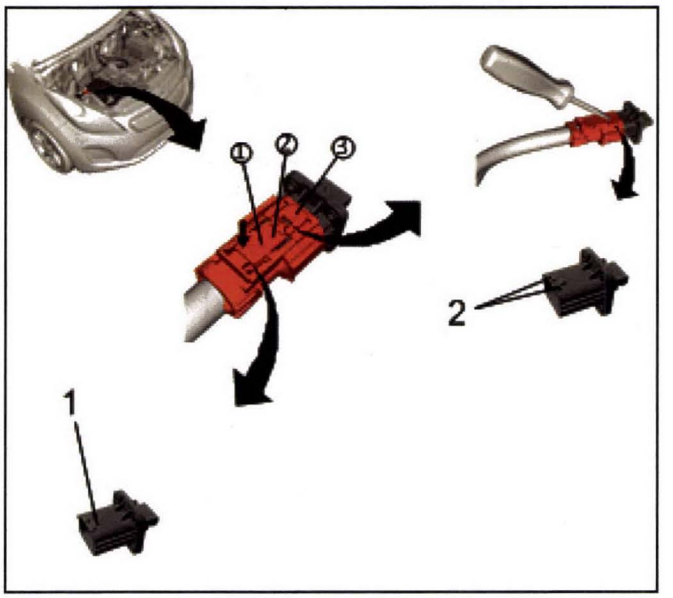

3794632

8. Disconnect the 2-stage high voltage connectors in the following sequence:
   - Push down on the connector tab and release the connector from the first stage connector tab (1).
   - Using a flat blade screwdriver inserted into the connector as shown, release the second stage safety catch, from the 2 connector retaining tabs (2).

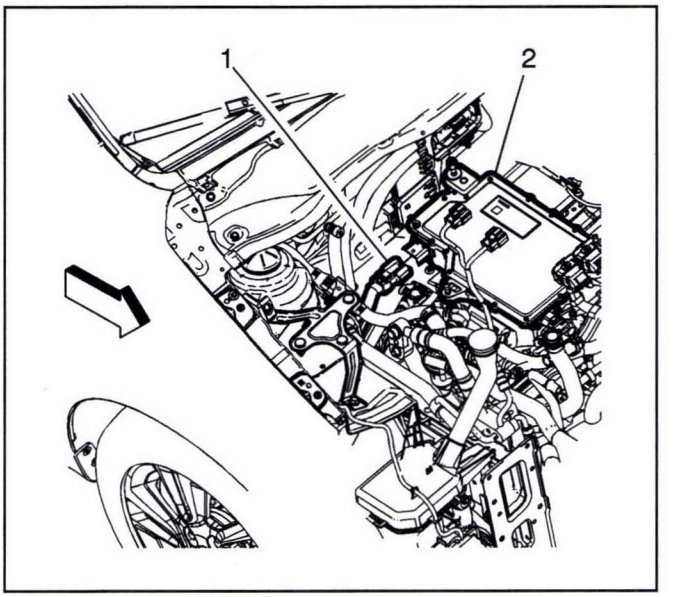

3232231

9. Remove the APM cable connector (1) on the right side of the APM module (2).

10. Remove the drive motor generator control module cooling outlet hose (Straight Hose) at the rear of the APM module. Refer to *Drive Motor Generator Control Module Cooling Outlet Hose Replacement (Auxiliary Radiator to Drive Motor Battery Charger) on page 9-292* or *Drive Motor Generator Control Module Cooling Outlet Hose Replacement (Long Hose) on page 9-293* or *Drive Motor Generator Control Module Cooling Outlet Hose Replacement (Two Bending) on page 9-294* or *Drive Motor Generator Control Module Cooling Outlet Hose Replacement (Straight Hose) on page 9-296*.

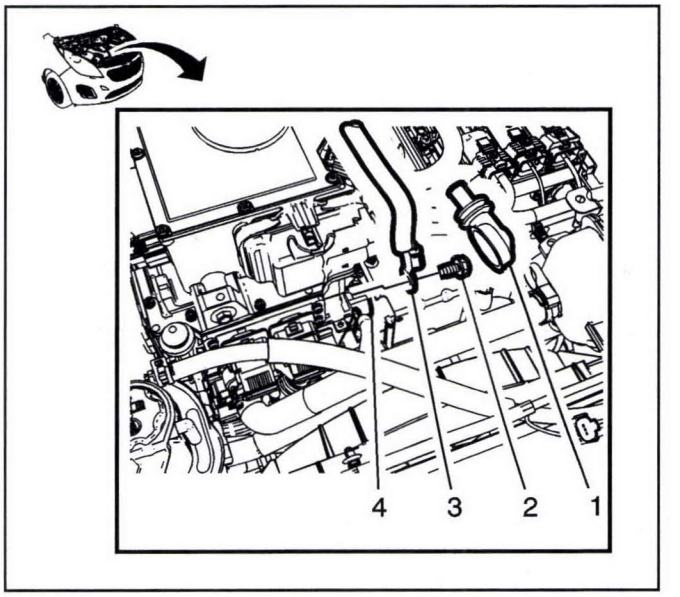

2917960

11. Remove the battery positive cable cover (1) and remove the battery positive cable fastener (2) from the left front side of the APM module (4).
12. Remove the battery positive cable (3) from the APM module.

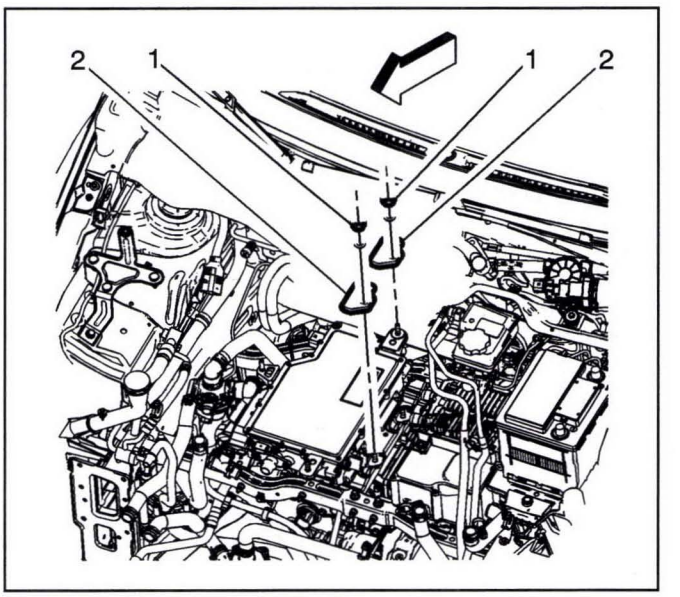

3232233

13. Remove the APM module retainer tray fasteners (1) and remove the retainer tray brackets (2).

    Note: Note the orientation of the retainer tray brackets.

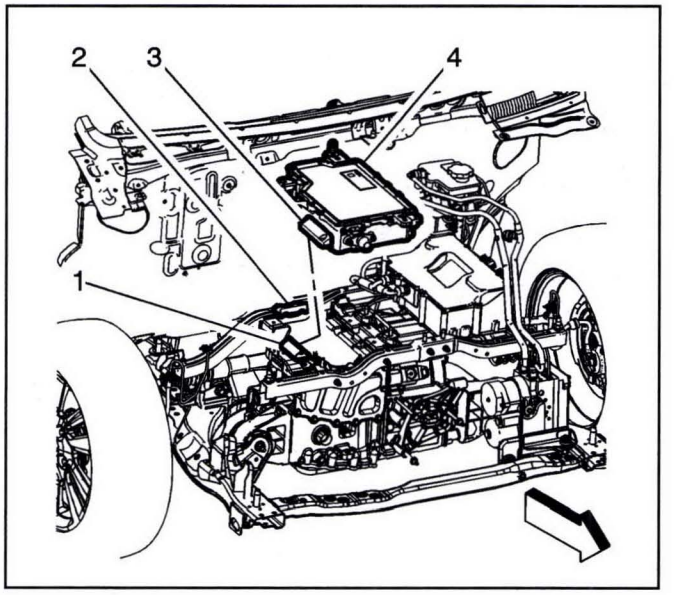

3232228

14. Unclip the APM module (4) from the retainer clip (1) and remove the APM module from the vehicle.

Installation Procedure

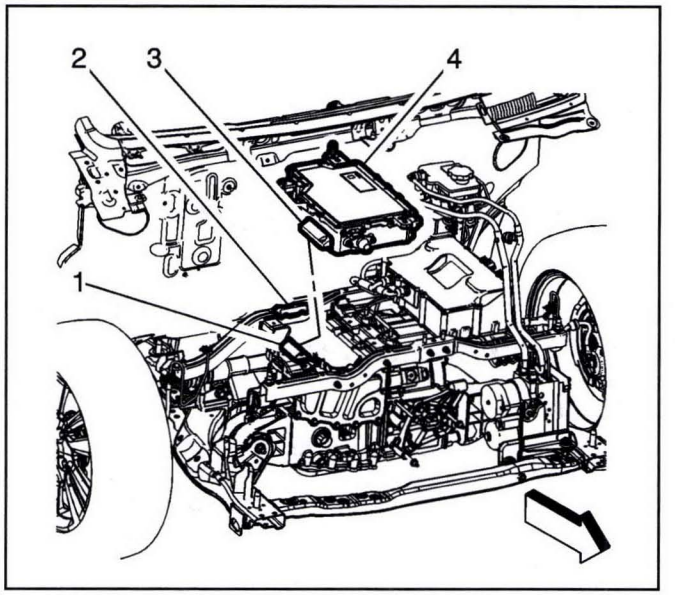

3232228

1. Install the APM module (4) into the retainer clip (1) and position the APM module against the back stop bracket (2).

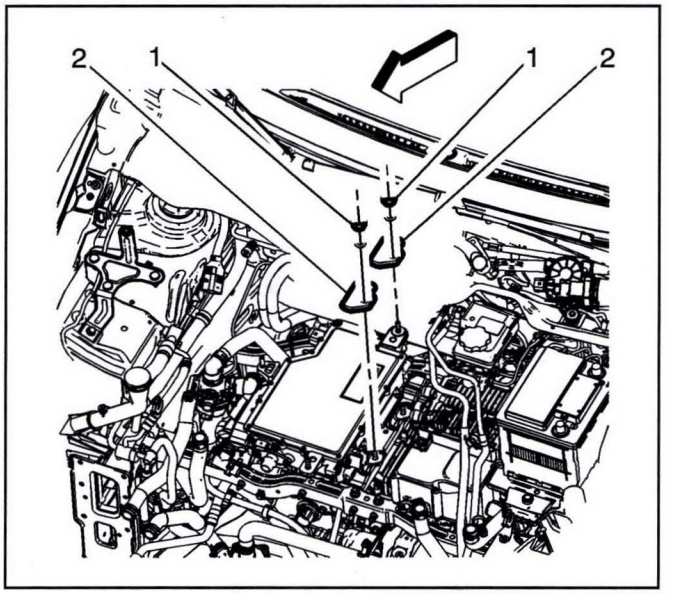

3232233

Caution: Refer to *Fastener Caution on page 0-8*.

2. Install the APM module retainer tray brackets in the "UP" position and tighten the fasteners (1) to **22 N•m (16 lb ft)**.
3. Install the drive motor generator control module cooling outlet hose (Straight Hose) at the rear of the APM module. Refer to *Drive Motor Generator Control Module Cooling Outlet Hose Replacement (Auxiliary Radiator to Drive Motor Battery Charger) on page 9-292* or *Drive Motor Generator Control Module Cooling Outlet Hose Replacement (Long Hose) on page 9-293* or *Drive Motor Generator Control Module Cooling Outlet Hose Replacement (Two Bending) on page 9-294* or *Drive Motor Generator Control Module Cooling Outlet Hose Replacement (Straight Hose) on page 9-296*.

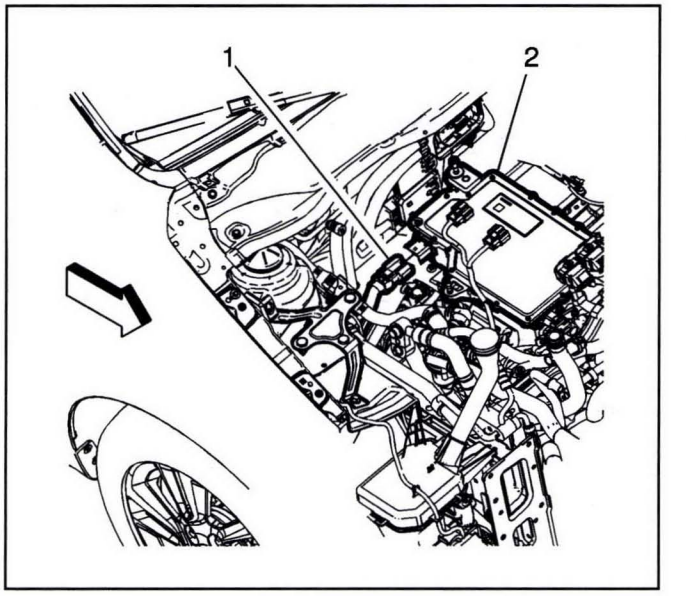

3232231

4. Connect the APM module cable connector (1) to the right side of the APM module (2).

5. Install the generator control module coolant hose at the front of the APM module. Refer to *Generator Control Module Coolant Hose Replacement (PE From APM TO TPIM) on page 9-298*.

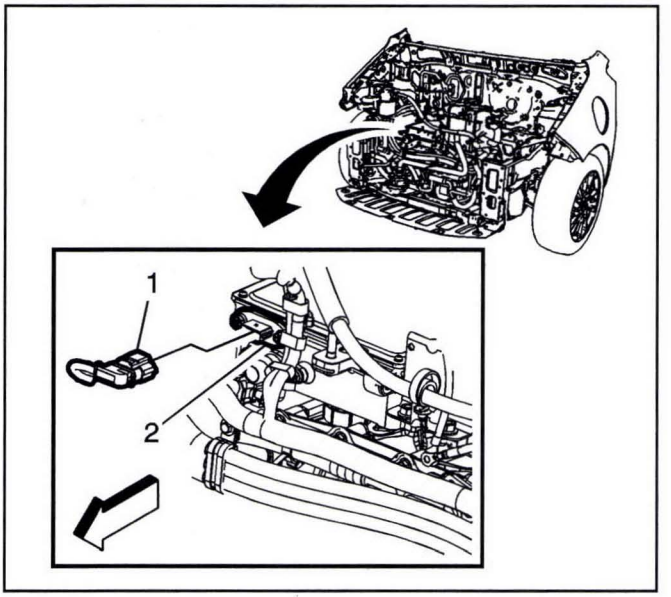

3239594

6. Connect the engine harness connector (1) to the front right side of the APM module (2).

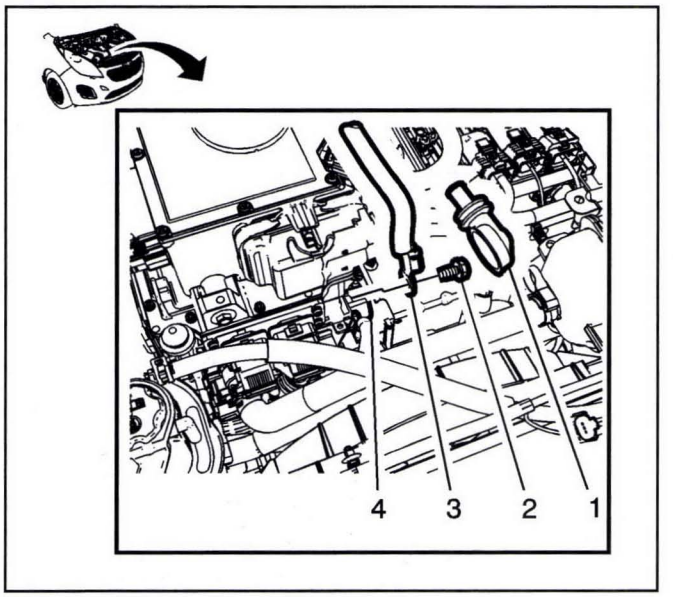

2917960

7. Install the battery positive cable (3) to the APM module stud (4) and tighten the fastener (2) to **22 N•m (16 lb ft)**.
8. Install the protective boot (1).

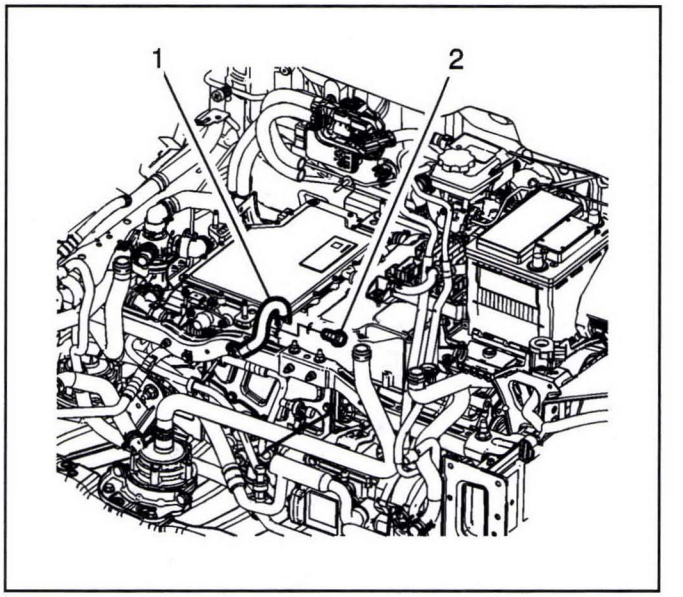

3232234

9. Install the APM module ground cable (1) to the APM module and tighten the fastener (2) to **9 N•m (80 lb in)**.
10. Install the drive motor generator power inverter module. Refer to *Drive Motor Generator Power Inverter Module Replacement on page 9-184*.
11. Install the high voltage battery disconnect control module. Refer to *High Voltage Battery Disconnect Control Module Module Replacement (with quick charge) on page 9-175* or *High Voltage Battery Disconnect Control Module Module Replacement (without quick charge) on page 9-179*
12. Install the high voltage disconnect circuit cover. Refer to *High Voltage Disconnect Circuit Connector Cover Replacement on page 9-174*.
13. Enable the high voltage system. Refer to *High Voltage Enabling on page 9-367*.

Description and Operation

Accessory DC Power Control Module Description and Operation

Location

The 14V power module, also called the accessory DC power control module, is located in the in the front compartment underneath the drive motor power inverter module. The 14V power module is cooled with pre-mixed Dexcool® circulating through a cooling system that is separate from the engine cooling system.

Operating Functions

The 14V power module is an electronic device that takes the place of the generator on a traditional vehicle. On a hybrid or electric vehicle the 14V power module converts high voltage (300V) direct current (DC) to low voltage (12V) DC for accessory electrical operation and to charge the 12V battery.

Normally, the 14V power module only supplies 12V DC when the vehicle is under a normal drive cycle. However there are certain instances when the vehicle

is being charged through a standard wall socket where the 14V power module operation is required to sustain the 12V battery.

The 14V power module is capable of supplying up to 165 Amps of 12V DC.

Communication and Hosted Diagnostics

The 14V power module has no internal diagnostic tests and does not communicate over serial data. The engine control module (ECM) monitors and controls the 14V power module and will report DTCs if a fault is detected.

Circuit Inputs

Inputs to the 14V power module include the high voltage and 12V circuits. The 14V power module also has a pulse width modulated set point input from the engine control module (ECM). This input enables conversion of voltage from high to the desired 12V output level.

For more information on the 12V Battery Charging System, refer to *Charging System Description and Operation on page 9-34*.

Circuit Outputs

The only outputs supported by the 14V power module are the status feedback circuit to the engine control module (ECM) and 12V DC which powers the 12V components in the vehicle and charges the 12V battery. Low voltage 12V cables on the hybrid/EV vehicle do not require unique coloring or servicing procedures.

Drive Motor Generator Power Inverter Module Description and Operation

Overview

The power inverter module, often referred to as the drive motor generator power inverter module, converts high voltage direct current (DC) electrical energy to 3 phase alternating current (AC) electrical energy. The power inverter module contains 2 motor control modules and the hybrid/EV powertrain control module 1. One of the motor control modules operates the drive motor based upon power inverter module commands. The second motor control module controls the auxiliary transmission fluid pump. The hybrid/EV powertrain control module 1 and the motor control modules share the power inverter module ignition voltage circuit, battery voltage circuits and chassis ground. All three modules are flash-programmable micro-processors. The power inverter module is cooled with pre-mixed Dexcool® circulating through a cooling system that is separate from the engine cooling system. The hybrid cooling system utilizes a heat exchanger at the front of the vehicle and electric pumps to circulate the coolant. The ECM monitors a temperature sensor in the hybrid cooling system and operates the radiator fan and the hybrid coolant pumps in response to system temperature.

High Voltage Circuits

Direct Current (DC)

The power inverter module is connected to the positive and negative terminals of the high voltage DC hybrid/EV battery pack. Both of the negative and positive high voltage DC battery poles are isolated from the vehicle chassis by a specific amount of resistance. Each high voltage DC bus is switched ON or OFF by a high voltage, high current contactor relay contained within the hybrid/EV battery pack. All high voltage DC negative and positive DC cables are individually shielded and orange in color to alert the technician to the potential presence of high voltage. The electric air conditioning compressor receives high voltage from DC cables connected to the battery charger DC.

Three Phase Alternating Current (AC)

Three individual cables connect each phase of the drive motor to the power inverter module. Each individually shielded cable is orange in color to alert the technician to the potential presence of high voltage. A harness connects the auxiliary transmission fluid pump to the power inverter module. This harness contains individual wires that are connected to the 3 phases of the auxiliary transmission fluid pump, and is orange in color to alert the technician to the potential presence of high voltage.

Low Voltage Circuits

The 14V power module, also called the accessory DC power control module, is the device which converts high voltage (300V) DC to low voltage (12V) DC for accessory electrical operation and to charge the 12V accessory battery.

Low Voltage (12V) Direct Current

Low voltage (12V) cables on the hybrid-electric vehicle do not require unique coloring or servicing procedures.

Hybrid Powertrain Control Module

Location

The hybrid/EV powertrain control module 1 is a non-serviceable, flash-programmable micro-processor contained within the power inverter module.

Operating Functions

The hybrid/EV powertrain control module 1 is the main controller of powertrain operation. The hybrid/EV powertrain control module 1 determines when to perform normal operating modes such as electric mode and regenerative braking. The hybrid/EV powertrain control module 1 also operates in conjunction with the hybrid/EV powertrain control module 2 to determine when to enable and disable the DC high voltage circuits. The hybrid/EV powertrain control module 2 is external to the drive motor generator power inverter module.

Communication and Hosted Diagnostics

The hybrid/EV powertrain control module 1 is the host controller for DTC information for the following control modules:

- Drive motor 1 control module
- Auxiliary transmission fluid pump control module

These modules diagnose their own operation and determine when a fault condition is present.

Both motor control modules and the hybrid/EV powertrain control module 1 exchange information and commands on a serial peripheral interface bus internal communication circuit as well as the hi-speed hybrid GMLAN communication circuit.

In the event a hosted module communicates a fault condition, the hybrid/EV powertrain control module 1 will determine if one or more operating modes are affected and notify the vehicle operator by requesting the MIL illuminate and/or by displaying a message in the Driver Information Center. In addition, the hybrid/EV powertrain control module 1 will store the associated DTC information for retrieval by a scan tool. Some hosted modules may require an ignition cycle to clear certain DTCs from the hybrid/EV powertrain control module 1.

Circuit Inputs

In addition to data parameters, the hybrid/EV powertrain control module 1 directly monitors the following signal circuits:

- Transmission internal mode switch direction and Park/Neutral switch signals
- High voltage interlock circuit

Motor Control Modules

Location

The drive motor and the auxiliary transmission fluid pump motor are located within the transmission. They are each controlled by their own motor control module; each module is a flash-programmable micro-processor. Each motor control module is contained within the power inverter module. Also contained within the power inverter module is the hybrid/EV powertrain control module 1 micro-processor.

Operating Functions

The motor control modules operate their respective motors based upon hybrid/EV powertrain control module 1 commands. Each motor control module controls the speed, direction, and output torque of the drive motor or the auxiliary transmission fluid pump through the sequencing actuation of high current switching transistors called insulated gate bipolar transistors.

Communication and Hosted Diagnostics

In addition to the internal serial peripheral interface bus communication circuit that the hybrid/EV powertrain control module 1 and each motor control module control use to communicate, the motor control module also communicate on the hi-speed and hybrid serial data circuits. The motor control module does not store its own Diagnostic Trouble Code (DTC) information. The hybrid/EV powertrain control module 1 will store motor control module associated DTC information for retrieval by a scan tool. The scan tool can communicate directly with each motor control module in order to retrieve data parameters only.

Circuit Inputs

In addition to data parameters, each motor control module monitors its respective motor for voltage, current, speed, direction and temperature. Additionally, the motor control module monitors the insulated gate bipolar transistor components for temperature and proper operation. Some of the motor control module operation data is shared with the hybrid/EV powertrain control module 1.

Circuit Outputs

Each motor control module controls its respective insulated gate bipolar transistor driver board that in-turn controls each motor. The motors operate using 3–phase AC electricity. 3 cables connect each drive motor to the power inverter module. Each individually shielded cable is orange in color to alert the technician that the potential for high voltage is present. A single shielded cable connects the auxiliary transmission fluid pump to the power inverter module. This cable contains 3 individual wires that are connected to the 3 phases of the auxiliary transmission fluid pump. The cable is orange in color to alert the technician to the potential presence of high voltage.

Engine Control Module (ECM) Description and Operation

The ECM on this vehicle is also called an engine control module and is used in electric, hybrid, and conventional vehicle applications. The ECM interacts with many related components and systems, and monitors them for deterioration. Diagnostics monitor the system performance and a diagnostic trouble code (DTC) sets if the system performance degrades. The ECM is part of a network and communicates with various other vehicle control modules.

Malfunction indicator lamp (MIL) operation and DTC storage are dictated by the DTC type. A DTC is ranked as a Type A, B, or C DTC. Refer to *Powertrain Diagnostic Trouble Code (DTC) Type Definitions on page 6-92*. Other system control modules may request the ECM to illuminate the MIL. In these cases there is no fault with the ECM, and a DTC will set in the ECM indicating which control module requested the MIL illumination.

The ECM is the control center of the some of the vehicle control systems. Review the components and wiring diagrams in order to determine which systems are controlled by the ECM.

The ECM constantly monitors the information from various sensors and other inputs, and controls the systems that affect vehicle performance. The ECM also performs diagnostic tests on various parts of the system and may illuminate the MIL when it detects a malfunction that affects vehicle performance. When the ECM detects a malfunction, the ECM stores a DTC. The condition area is identified by the particular DTC that is set. This aids the technician in making repairs.

ECM Function

The ECM can supply 5V or 12V to various sensors or switches. This is done through pull-up resistors to regulated power supplies within the ECM. In some cases, even an ordinary shop voltmeter will not give an accurate reading due to low input resistance.

Therefore, a digital multimeter (DMM) with at least 10 megaohms input impedance is required in order to ensure accurate voltage readings.

The ECM controls the output circuits by controlling the ground or the voltage circuit through transistors or a device called a high side or low side driver.

EEPROM

The electronically erasable programmable read only memory (EEPROM) is an integral part of the ECM. The EEPROM contains program and calibration information that the ECM needs in order to control engine operation.

Special equipment, as well as the correct program and calibration for the vehicle, are required in order to reprogram the ECM, refer to *Control Module References on page 6-3* for ECM replacement, programming, and setup.

Data Link Connector (DLC)

The data link connector (DLC) provides serial data communication for ECM and vehicle diagnosis. This connector allows the technician to use a scan tool in order to monitor various serial data parameters, and display DTC information. The DLC is located on the left side of the driver's compartment, underneath the instrument panel.

Malfunction Indicator Lamp (MIL)

The electric vehicle malfunction indicator lamp (MIL) is displayed in the instrument panel cluster (IPC) during bulb check or if a fault has been detected. The MIL is controlled by the ECM and illuminates when the ECM detects a condition that affects vehicle performance or when another module on the vehicle requests MIL illumination.

Internal Mode Switch

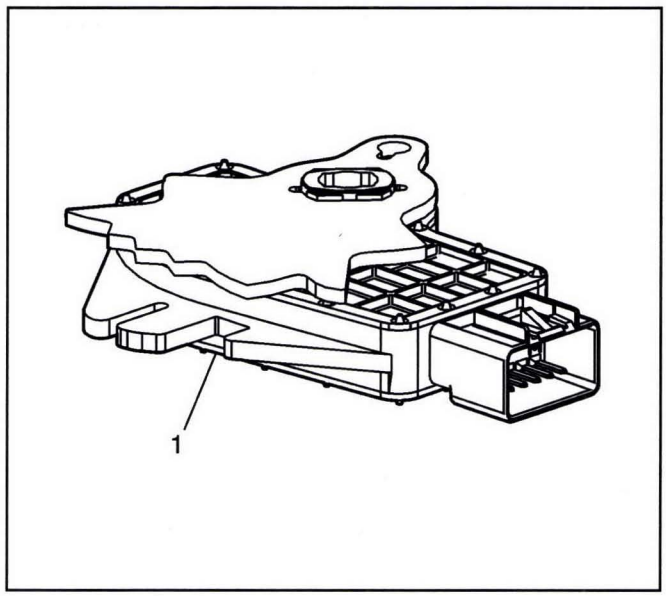

3242622

The internal mode switch assembly (1) is a dual sliding contact switch attached to the control valve body within the transmission. The nine outputs from the switch indicate which position is selected by the transmission manual shaft. Four outputs (A, B, C, P), are range selection inputs to the ECM. Five outputs (R1, R2, S) are direction selection inputs to the hybrid/EV powertrain control module 1 through the transmission X176 20-way connector. The input voltage at the modules is high when the switch is open and low when the switch is closed to ground. The state of each input is displayed on the scan tool as Internal Mode Switch Range and Internal Mode Switch Range Direction. The Internal Mode Switch Range input parameters represented on the scan tool as Internal Mode Switch A/B/C/P. The Internal Mode Switch Range Direction input parameters represented on the scan tool as Internal Mode Switch 2 – D1, D2, R1, R2, and S.

Transmission Fluid Temperature Sensor

The transmission fluid temperature sensor is part of the A/Trans Control Wiring Harness Assembly and is not service separately. The transmission fluid temperature sensor is connected to the ECM and is used monitor the transmission fluid temperature for overheating conditions and drive motor torque control.

ECM Service Precautions

The ECM is designed to withstand normal current draws that are associated with normal vehicle operations. However, care must be used in order to avoid overloading any of these circuits. When testing for opens or shorts, do not ground or apply voltage to any of the ECM circuits unless the diagnostic procedure instructs you to do so. These circuits should only be tested with a DMM unless the diagnostic procedure instructs otherwise.

Aftermarket (Add-On) Electrical Equipment

Caution: Connect any add-on electrically operated equipment to the vehicle's electrical system at the 12 V battery (power and ground) in order to prevent damage to the vehicle.

Add-on electrical equipment, even when installed to these strict guidelines, may still cause the powertrain system to malfunction. This may also include equipment not connected to the vehicle electrical system, such as portable telephones and radios. Therefore, the first step in diagnosing any powertrain condition is to eliminate all of the aftermarket electrical equipment from the vehicle. After this is done, if the problem still exists, the problem may be diagnosed in the normal manner.

Electrostatic Discharge (ESD) Damage

Note: In order to prevent possible electrostatic discharge damage to the ECM, DO NOT touch the connector pins on the ECM.

The electronic components that are used in the control systems are often designed to carry very low voltage. These electronic components are susceptible to damage caused by electrostatic discharge. Less than 100V of static electricity can cause damage to some electronic components. By comparison, it takes as much as 4,000V for a person to even feel a static discharge.

There are several ways for a person to become statically charged. The most common methods of charging are by friction and by induction. An example of charging by friction is a person sliding across a car seat.

Charging by induction occurs when a person with well insulated shoes stands near a highly charged object and momentarily touches ground. Charges of the same polarity are drained off leaving the person highly charged with the opposite polarity. Static charges can cause damage, therefore, it is important to use care when handling and testing electronic components.

Electromagnetic Compatibility Description

Overview

Vehicles are typically subject to certain legal requirements that limit the amount of electromagnetic interference (EMI) that can be generated by the vehicles electronic devices. Additionally, the electronic devices within the vehicle must be able to withstand a certain amount of EMI without affecting their operation. EMI is generated whenever electrical current flows through a circuit. The amount of EMI generated, or amplitude, is usually dependent upon the amount of current flow, amperage, and the on-off pattern of current flow through the circuit, frequency. The EMI requirements are generally referred to as electromagnetic compatibility.

There are many ways of ensuring the vehicle meets electromagnetic compatibility requirements. These include:

- Adding capacitors and resistors to certain electrical circuits
- Regulating the frequency at which a component may operate
- Shielding the wires, cables and components

Circuit Design

The power inverter module, often referred to as the drive motor generator power inverter module, and the 14V power module, often referred to as the accessory DC power control module, each contain filter capacitors connected to the high voltage circuits. These capacitors are necessary to reduce the voltage spikes that occur as a result of the switching of current On and Off. Reducing voltage spikes reduces EMI. The frequency of current switching is also closely regulated. Too high a frequency can cause an increase in EMI generation.

Wiring/Cable Design

Different types of wire/cable shielding methods are utilized in the vehicle. Common types of circuit shielding include twisted-pair and internal braid or foil. Twisted pair is typically used in circuits such as serial data circuits. The wire pair is twisted together at a particular turns-per-length ratio. Shielded cable is utilized for all other circuits requiring either protection from external EMI or to reduce EMI radiation of the cable itself into other nearby components or circuits.

High Voltage Cable

- 300-Volt Battery Positive and Negative Cable
- Drive Motor Generator Power Inverter Module 3 Phase Cable Assembly
- Air Conditioning and Drive Motor Battery Cooling Compressor

The high voltage cables utilize internal braid shielding. Typically, both ends of the internal braid shield are attached to chassis ground. All of the high voltage, internally shielded cables are grounded at their cable end attachment points. Mounting blocks, where used, perform the shield to chassis ground connection. Connection points not serviced with a mounting block utilize a separate ring terminal.

Low and Intermediate Voltage Wiring

The signal circuits for the transmission sensors utilize shielding protection. The drive motor position sensor circuits utilize internal foil shielding. The wiring harness external of the transmission assembly is connected to chassis ground with ring terminals at the power inverter module. The internal transmission wiring harness is attached to chassis ground with a ring terminal at the valve body assembly.

The auxiliary transmission fluid pump 3 phase cables utilize internal foil shielding. The wiring harness shield is connected to chassis ground within the power inverter module.

Component Shielding

Certain components utilize their structure to effectively shield EMI. Metal covers, chassis grounded metal cases and electro-magnetically conductive gaskets may all be part of a components electromagnetic compatibility design.

Shielding Loss

A loss of proper shielding may result in poor AM band radio reception and/or incorrect sensor circuit readings depending upon the location of the shield loss. Damage that has penetrated to the insulated conductor of high voltage cables is not repairable. Minor damage to the outer sheathing can be repaired, refer to *Drive Motor Power Inverter Module 3 Phase Cable Inspection on page 16-25*. Certain Low and Intermediate voltage shielded wiring harnesses may be repairable. Refer to *Wiring Repairs on page 11-883* and *Splicing Twisted or Shielded Cable on page 11-893*.

High Voltage Monitoring Systems Description

The hybrid/EV system monitors several high voltage components for attempted access. Additionally, a minimum amount of isolation resistance is maintained at all times between both negative and positive poles of the hybrid/EV battery and the vehicle chassis. Microprocessors internal to the power inverter module, often referred to as the drive motor generator power inverter module, and the hybrid/EV powertrain control module 2 monitor the hybrid/EV system for access and loss of isolation.

High Voltage Interlock Circuit

The high voltage interlock circuit is a wire loop that passes through certain high voltage components. The high voltage interlock circuit is used to determine if access to high voltage components is being attempted. The opening of these high voltage components causes the high voltage interlock circuit to open. The hybrid/EV system may react to the loss of high voltage interlock circuit continuity by opening the high voltage contactor relays and discharging the high voltage capacitors. The high voltage interlock circuit signal is generated by the hybrid/EV powertrain control module 2. The high voltage interlock circuit status is monitored by the hybrid/EV powertrain control module 2, the hybrid/EV powertrain control module 1, and each drive motor control module.

High Voltage DC Chassis Isolation

The hybrid/EV system monitors the electrical potential between each high voltage bus and the vehicle chassis. High voltage should always be isolated from the vehicle chassis by a certain amount of resistance to avoid the potential for a life threatening current path. In the event that a high voltage leak path to the vehicle chassis is detected, the hybrid/EV system will set a diagnostic trouble code (DTC). High voltage DC chassis isolation is monitored by the drive motor control modules and the hybrid/EV powertrain control module 2.

Testing for loss of isolation requires special tools and procedures. Because of the high voltage present in the hybrid/EV system, a loss of isolation may occur due to insulation breakdown. Insulation breakdown typically occurs only when high voltages and/or current is present. Conditions such as insulation breakdown cannot be diagnosed with a typical DMM because high voltage is not used by the DMM when measuring resistance.

Hybrid Modes of Operation Description

Vehicle Operating Modes Description

This vehicle is a Battery Electric Vehicle. It uses only an electric propulsion system to drive the vehicle at all times. Electricity is the vehicle's only source of energy.

Electric Mode

Electric Mode is the only mode of operation for this vehicle. The vehicle is powered by electrical energy stored in the high voltage hybrid/EV battery pack. The vehicle will operate in this mode until the high voltage battery has reached a low state of charge.

Service Mode

Service Mode is available for service and diagnostics and to verify the proper operation of the MIL and may be required for emission inspection purposes. With vehicle OFF, and the brake pedal not applied, pressing and holding the POWER button for more than 5 seconds will place the vehicle in Service Mode. The instruments and audio systems will operate as they do in ON, but the vehicle will not be able to be driven. The propulsion system will not start in Service Mode.

Regenerative Braking

When the vehicle is coasting or braking, the drive motor generator power inverter module may operate the drive motor as a generator in an Electrical Generation Mode. Operating as an electrical generator, the drive motor exerts a driveline load that helps to slow the vehicle. The electrical energy that the drive motor creates is transferred by the drive motor generator power inverter module to the hybrid/EV battery pack. Constant communication between the drive motor generator power inverter module and the electronic brake control module allows the blending of regenerative braking force with hydraulic braking force.

Special Tools and Equipment

Illustration	Tool Number/ Description
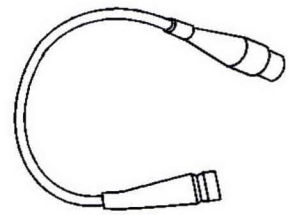 537322	DT-44152 Jumper Harness, 20 Terminal
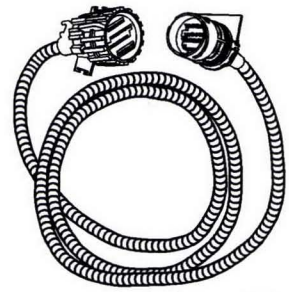 1979686	DT-48493 Jumper Harness

Hybrid/EV Battery Heating and Cooling

Specifications

Temperature Versus Resistance (Hybrid/EV Battery Pack Coolant Temperature Sensor)

Hybrid/EV Battery Temperature Sensor 1/2

Temperature Degrees C (Degrees F)	Resistance k ohms (typical)
−40°C (−40°F)	77529.3
−38°C (−36°F)	68275.4
−36°C (−33°F)	59021.5
−34°C (−29°F)	51442.0
−32°C (−26°F)	45536.9
−30°C (−22°F)	39631.9
−28°C (−18°F)	35437.9
−26°C (−15°F)	31244.0
−24°C (−11°F)	27648.3
−22°C (−8°F)	24650.8
−20°C (−4°F)	21653.4
−18°C (0°F)	19484.0
−16°C (3°F)	17314.5
−14°C (7°F)	15439.6
−12°C (10°F)	13859.1
−10°C (14°F)	12278.7
−8°C (18°F)	11112.2
−6°C (21°F)	9945.7
−4°C (25°F)	8929.7
−2°C (28°F)	8064.1
0°C (32°F)	7198.5
2°C (36°F)	6550.4
4°C (39°F)	5902.3
6°C (43°F)	5334.0
8°C (46°F)	4845.4
10°C (50°F)	4356.8
12°C (54°F)	3985.3
14°C (57°F)	3613.9
16°C (61°F)	3286.1
18°C (64°F)	3001.9
20°C (68°F)	2717.8
22°C (72°F)	2501.4
24°C (75°F)	2285.0
26°C (79°F)	2092.5
28°C (82°F)	1924.0
30°C (86°F)	1755.5
32°C (90°F)	1623.5

Hybrid/EV Battery Temperature Sensor 1/2 (cont'd)

Temperature Degrees C (Degrees F)	Resistance k ohms (typical)
34°C (93°F)	1491.4
36°C (97°F)	1373.4
38°C (100°F)	1269.4
40°C (104°F)	1165.3
42°C (108°F)	1082.6
44°C (111°F)	999.9
46°C (115°F)	925.5
48°C (118°F)	859.4
50°C (122°F)	793.2
52°C (126°F)	739.9
54°C (129°F)	686.6
56°C (133°F)	638.4
58°C (136°F)	595.3
60°C (140°F)	552.1
62°C (143°F)	517.0
64°C (147°F)	481.8
66°C (151°F)	449.8
68°C (154°F)	420.9
70°C (158°F)	392.1
72°C (162°F)	368.4
74°C (165°F)	344.7
76°C (169°F)	323.0
78°C (172°F)	303.4
80°C (176°F)	283.8
82°C (180°F)	267.4
84°C (183°F)	250.9
86°C (187°F)	235.9
88°C (190°F)	222.2

Temperature Versus Resistance (Hybrid/EV Battery Temperature Sensor)

Hybrid/EV Battery Temperature Sensor 1–6

Temperature Degrees C (Degrees F)	Resistance k ohms (typical)
−40°C (−40°F)	201.7
−38°C (−36°F)	180.9
−36°C (−33°F)	162.3
−34°C (−29°F)	145.9
−32°C (−26°F)	131.2
−30°C (−22°F)	118.2

Hybrid/EV Battery Temperature Sensor 1–6 (cont'd)

Temperature Degrees C (Degrees F)	Resistance k ohms (typical)
−28°C (−18°F)	106.6
−26°C (−15°F)	96.20
−24°C (−11°F)	86.93
−22°C (−8°F)	78.63
−20°C (−4°F)	71.20
−18°C (0°F)	64.53
−16°C (3°F)	58.55
−14°C (7°F)	53.17
−12°C (10°F)	48.33
−10°C (14°F)	43.97
−8°C (18°F)	40.04
−6°C (21°F)	36.50
−4°C (25°F)	33.29
−2°C (28°F)	30.40
0°C (32°F)	27.78
2°C (36°F)	25.45
4°C (39°F)	23.34
6°C (43°F)	21.43
8°C (46°F)	19.70
10°C (50°F)	18.12
12°C (54°F)	16.69
14°C (57°F)	15.38
16°C (61°F)	14.20
18°C (64°F)	13.11
20°C (68°F)	12.12
22°C (72°F)	11.22
24°C (75°F)	10.39
26°C (79°F)	9.629
28°C (82°F)	8.935
30°C (86°F)	8.298
32°C (90°F)	8.298

Hybrid/EV Battery Temperature Sensor 1–6 (cont'd)

Temperature Degrees C (Degrees F)	Resistance k ohms (typical)
34°C (93°F)	7.175
36°C (97°F)	6.681
38°C (100°F)	6.225
40°C (104°F)	5.806
42°C (108°F)	5.419
44°C (111°F)	5.061
46°C (115°F)	4.731
48°C (118°F)	4.425
50°C (122°F)	4.143
52°C (126°F)	3.881
54°C (129°F)	3.638
56°C (133°F)	3.413
58°C (136°F)	3.204
60°C (140°F)	3.010
62°C (143°F)	2.829
64°C (147°F)	2.661
66°C (151°F)	2.505
68°C (154°F)	2.359
70°C (158°F)	2.223
72°C (162°F)	2.096
74°C (165°F)	1.978
76°C (169°F)	1.867
78°C (172°F)	1.764
80°C (176°F)	1.667
82°C (180°F)	1.577
84°C (183°F)	1.492
86°C (187°F)	1.412
88°C (190°F)	1.338
90°C (194°F)	1.268

Fastener Tightening Specifications

Application	Specification	
	Metric	English
Auxiliary Radiator Bolt	6 N•m	53 lb in
Drive Motor Battery Coolant Cooler Bolt	22 N•m	16 lb ft
Drive Motor Battery Coolant Inlet Pipe Retainer	10 N•m	89 lb in
Drive Motor Battery Coolant Pump Nut	10 N•m	89 lb in
Drive Motor Battery Coolant Cooler Nut	22 N•m	16 lb ft
Drive Motor Battery Coolant Cooler Bracket Nut	9 N•m	80 lb in
Drive Motor Generator Control Module Coolant Pump Bolt	9 N•m	80 lb in
Engine Coolant Fan and Shroud Bolt	6 N•m	53 lb in
Radiator Upper Bracket Bolt	22 N•m	16 lb ft

Fastener Tightening Specifications (cont'd)

Application	Specification	
	Metric	English
Radiator Lower Bracket Fastener	22 N•m	16 lb ft
Radiator Surge Tank Clamp Bracket Bolt	9 N•m	80 lb in
Radiator Surge Tank Clamp Bracket Nut	9 N•m	80 lb in
Radiator Surge Tank Support Bracket Bolt	9 N•m	80 lb in

Approximate Fluid Capacities

Application	Specification	
	Metric	US English
Cooling Systems		
Heater Cooling	1.9 liters	2.01 quarts
High Voltage Battery Cooling	6.18 liters	6.53 quarts
Power Electronics Cooling	2.4 liters	2.54 quarts

Schematic and Routing Diagrams

Hybrid/EV Cooling Schematics (Hybrid/EV Electronics Cooling)

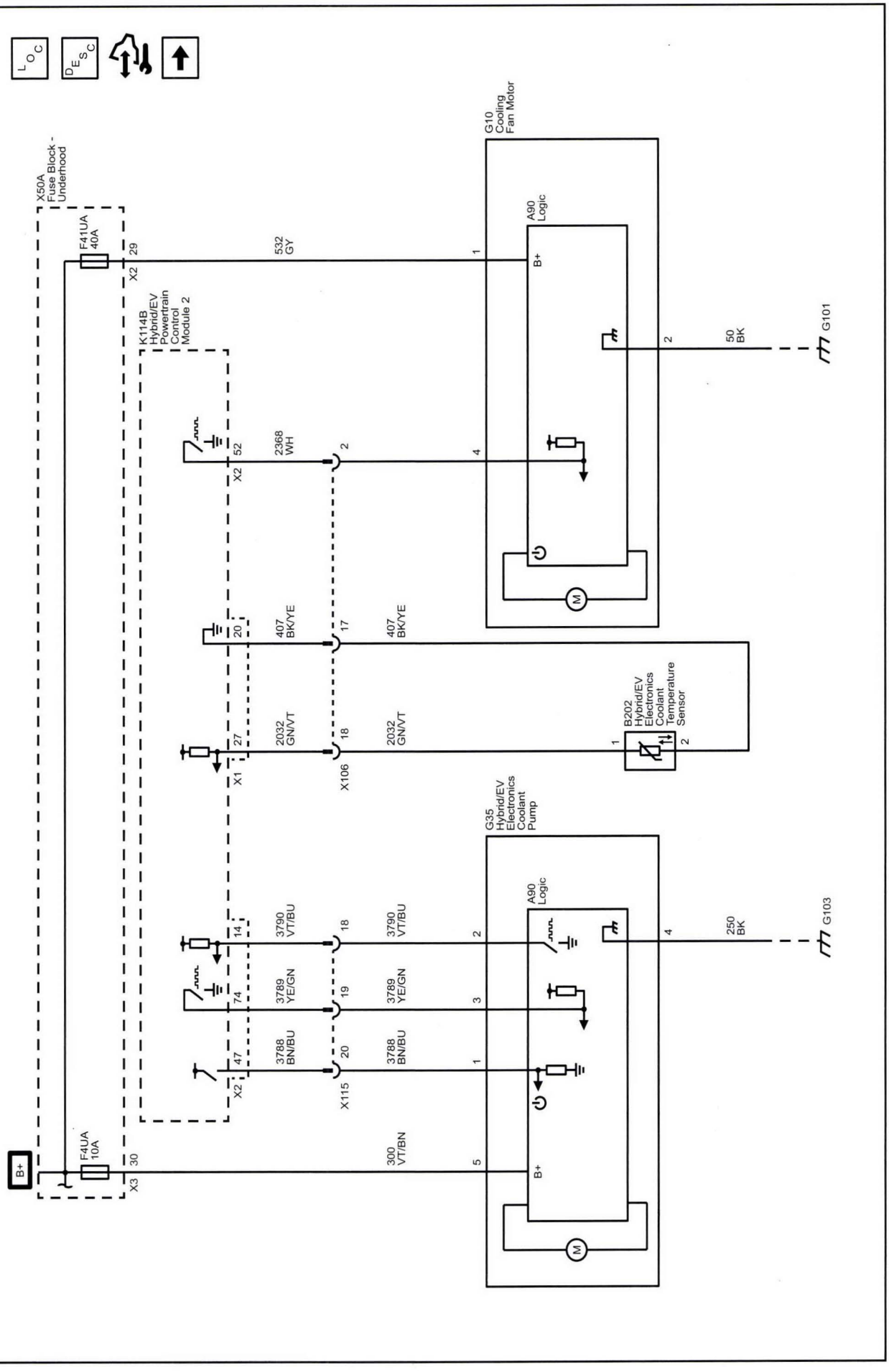

Hybrid/EV Cooling Schematics (Hybrid/EV Battery Pack Cooling - Coolant Pump, Level Switch, and Control Valve)

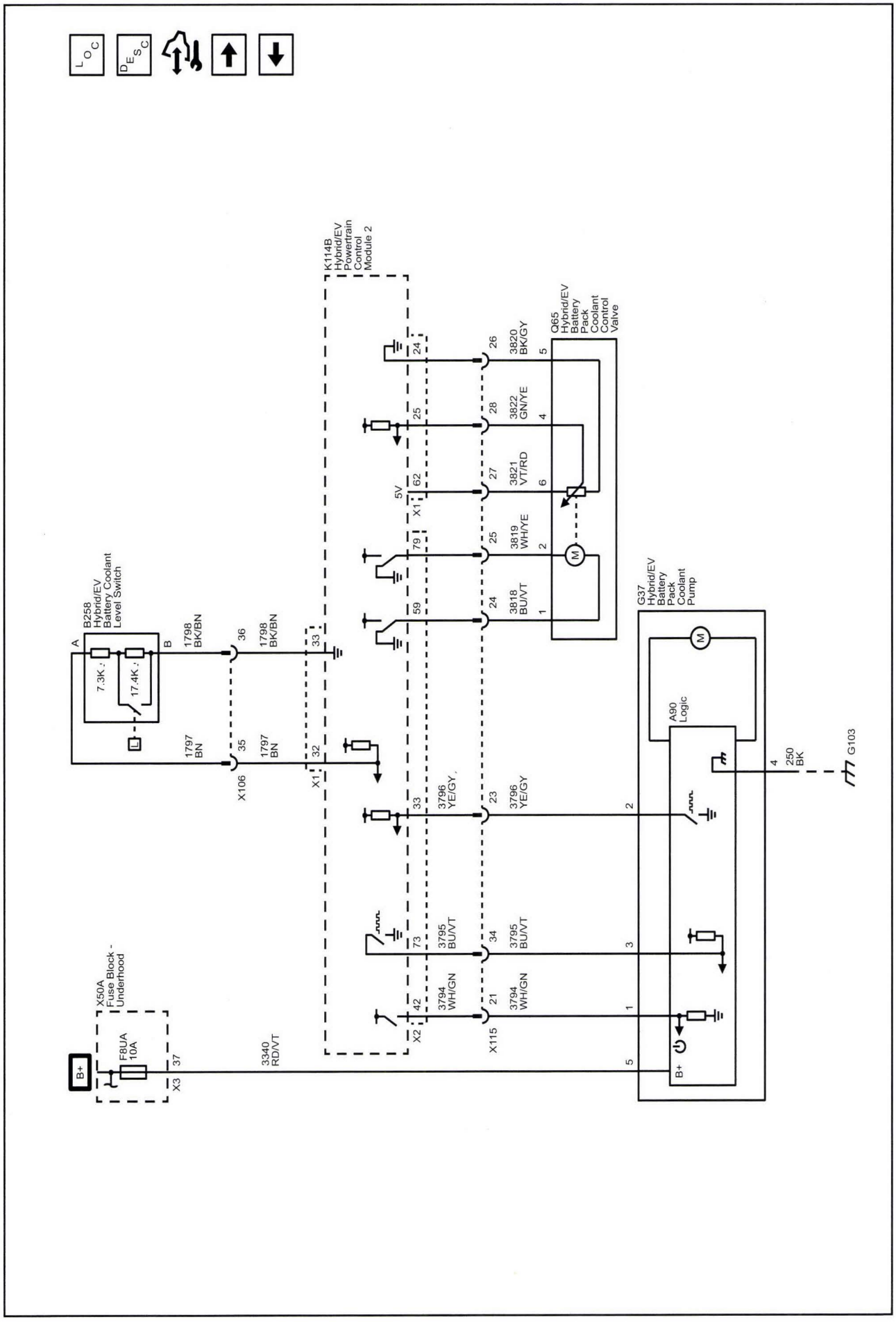

Hybrid/EV Cooling Schematics (Hybrid/EV Battery Pack Cooling - Coolant Heater)

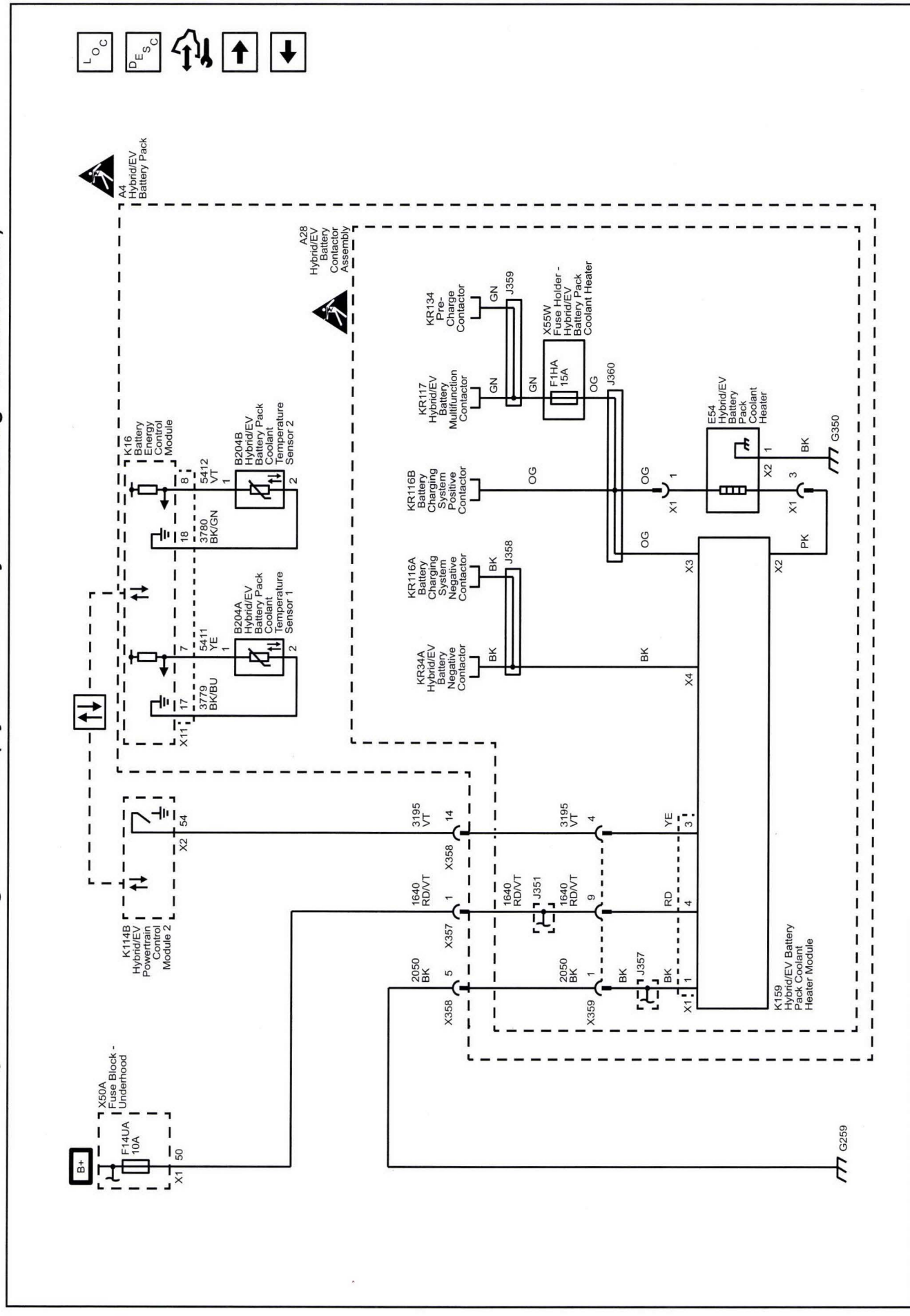

Hybrid/EV Cooling Schematics (Hybrid/EV Battery Temperature Sensors)

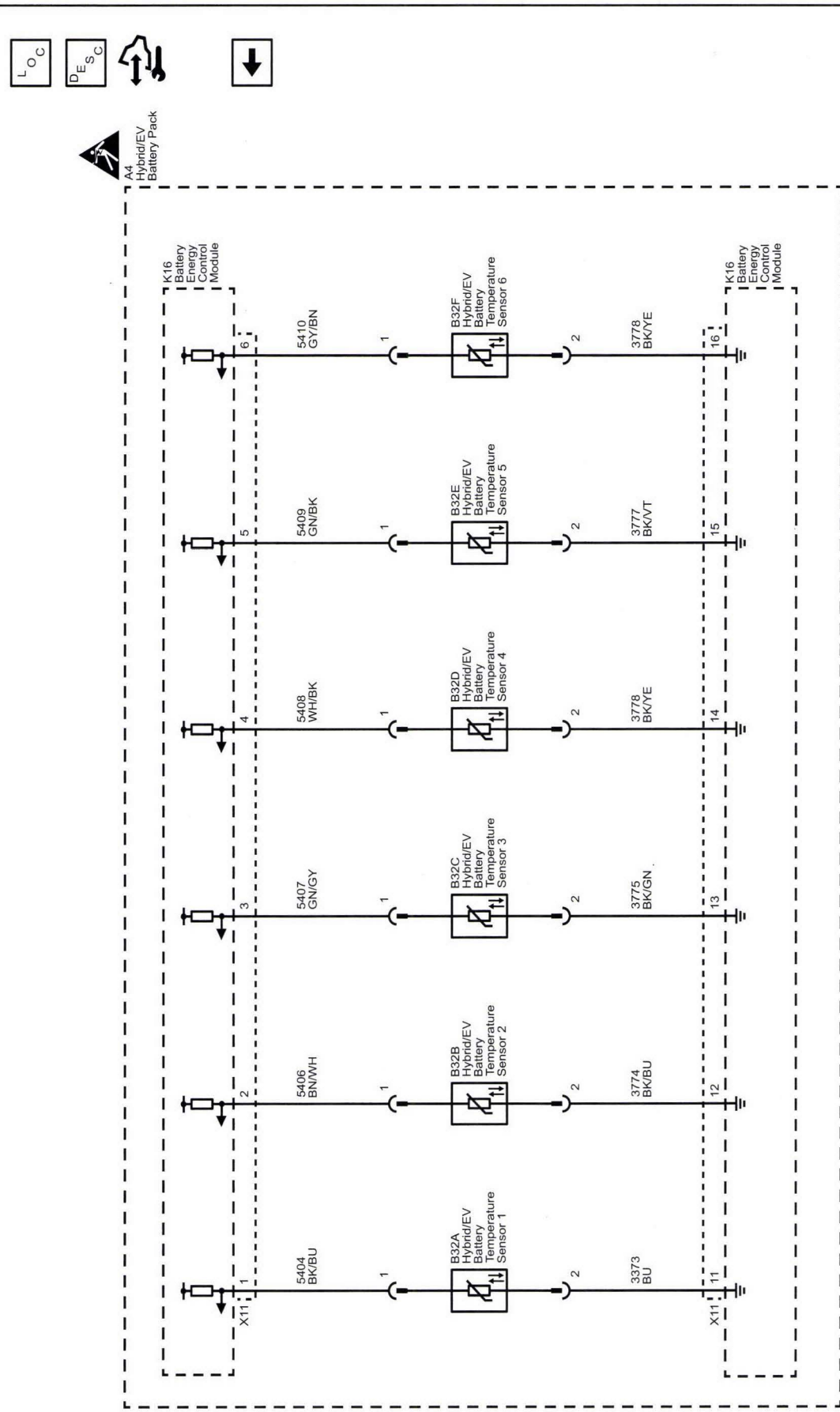

Diagnostic Information and Procedures

DTC P0480

Diagnostic Instructions

- Perform the *Diagnostic System Check - Vehicle on page 6-91* prior to using this diagnostic procedure.
- Review *Strategy Based Diagnosis on page 6-83* for an overview of the diagnostic approach.
- *Diagnostic Procedure Instructions on page 6-84* provides an overview of each diagnostic category.

DTC Descriptors

DTC P0480: Cooling Fan Relay Control Circuit

Circuit/System Description

The Hybrid/EV Powertrain Control Module 2 controls the radiator cooling fan. The cooling fan are controlled with a pulse width modulated signal. The Hybrid/EV Powertrain Control Module 2 diagnoses any faults with the hardwire circuit to the engine control module. The engine control module sends a fan request pulse width modulated signal to the Hybrid/EV Powertrain Control Module 2 through a hardwire circuit. The Hybrid/EV Powertrain Control Module 2 operates in a pass-through mode for the engine control module fan request. The higher the duty cycle the higher the cooling fan speed.

The Hybrid/EV Powertrain Control Module 2 sends a request to the engine control module for the cooling fan to be enabled. The engine control module uses this request and other vehicle inputs to decide if and what speed the cooling fan should operate. The engine control module sends the cooling fan command to the hybrid/EV powertrain control module 2. The Hybrid/EV Powertrain Control Module 2 sends the signal to the cooling fan to operate and at what speed.

If the vehicle is in Charge Mode and the Hybrid/EV Powertrain Control Module 2 requests the cooling fan to operate, if the engine control module is not awake, the Hybrid/EV Powertrain Control Module 2 will control the cooling fan. If active cooling is needed, the engine control module wakes up to operate the air conditioning control module and then the engine control module is the master controller for the fan.

Conditions for Running the DTC

The 12 V battery voltage is greater than or equal to 10.2 V.

Conditions for Setting the DTC

The Hybrid/EV Powertrain Control Module 2 has detected an open, short to ground or short to voltage fault on the fan control circuit.

Action Taken When the DTC Sets

DTC P0480 is a type B DTC.

Conditions for Clearing the DTC

DTC P0480 is a type B DTC.

Reference Information

Schematic Reference

Hybrid/EV Cooling Schematics on page 9-201

Connector End View Reference

Component Connector End Views on page 11-455

Description and Operation

Hybrid Cooling System Description and Operation on page 9-343

Electrical Information Reference

- *Circuit Testing on page 11-871*
- *Connector Repairs on page 11-895*
- *Testing for Intermittent Conditions and Poor Connections on page 11-877*
- *Wiring Repairs on page 11-883*

DTC Type Reference

Powertrain Diagnostic Trouble Code (DTC) Type Definitions on page 6-92

Scan Tool Reference

Control Module References on page 6-3 for scan tool information

Circuit/System Verification

1. Vehicle in Service Mode.
2. Command the Cooling Fan Motor Command to 90% with a scan tool. Verify that the cooling fan is operating.

⇒ **The cooling fan is not operating**

Refer to Circuit/System Testing

⇓ **The cooling fan is operating**

3. All OK.

Circuit/System Testing

1. Vehicle OFF, disconnect the harness connector at the G10 Cooling Fan Motor.
2. Test for less than 10 Ω between the ground circuit terminal 2 and ground.

⇒ **If 10 Ω or greater**

Test the ground circuit for an open/high resistance.

⇓ **If less than 10 Ω**

3. Vehicle in Service Mode.
4. Test for B+ between the B+ circuit terminal 1 and ground.

⇒ **If less than B+**

4.1. Vehicle OFF, test for infinite resistance between the B+ circuit and ground.

⇒ If less than infinite resistance, repair the short to ground on the circuit.

⇓ If infinite resistance

4.2. Test for less than 2 Ω in the B+ circuit end to end.

⇒ If 2 Ω or greater, repair the open/high resistance in the circuit.

⇒ If less than 2 Ω and the fuse is blown, replace the G10 Cooling Fan Motor.

⇓ **If B+**

5. Connect a test lamp between the control circuit terminal 4 and the B+ circuit terminal 1.
6. Command the Cooling Fan Motor Command ON between 10 % and 90 % with a scan tool. Verify the test lamp changes between dim (10 %) and bright (90 %).

⇒ **If the test lamp is always dim or does not illuminate**

6.1. Vehicle OFF, disconnect the X2 harness connector at the K114B Hybrid/EV Powertrain Control Module 2.

6.2. Test for less than 1 V between the control circuit and ground

⇒ If 1 V or greater, repair the short to voltage on the circuit.

⇓ If less than 1 V

6.3. Test for less than 2 Ω in the control circuit end to end.

⇒ If 2 Ω or greater, repair the open/high resistance in the circuit.

⇒ If less than 2 Ω, replace the K114B Hybrid/EV Powertrain Control Module 2.

⇒ **If the test lamp is always bright**

6.1. Vehicle OFF, disconnect the X2 harness connector at the K114B Hybrid/EV Powertrain Control Module 2.

6.2. Test for infinite resistance between the control circuit and ground.

⇒ If less than infinite resistance, repair the short to ground on the circuit.

⇒ If infinite resistance, replace the K114B Hybrid/EV Powertrain Control Module 2.

⇓ **The test lamp changes illumination between bright (20 %) and dim (90 %)**

7. Replace the G10 Cooling Fan Motor.

Repair Instructions

Perform the *Diagnostic Repair Verification on page 6-123* after completing the repair.

- *Cooling Fan and Shroud Replacement on page 9-283*
- *Control Module References on page 6-3* for hybrid/EV powertrain control module 2 replacement, programming and setup.

DTC P0A7E

Diagnostic Instructions

- Perform the *Diagnostic System Check - Vehicle on page 6-91* prior to using this diagnostic procedure.
- Review *Strategy Based Diagnosis on page 6-83* for an overview of the diagnostic approach.
- *Diagnostic Procedure Instructions on page 6-84* provides an overview of each diagnostic category.

DTC Descriptors

DTC P0A7E: Hybrid/EV Battery Pack High Temperature

Circuit/System Description

The hybrid/EV battery pack has 6 hybrid/EV battery temperature sensors. The temperature sensor is a variable resistor that measures the temperature of the hybrid/EV battery cell groups. The hybrid/EV battery interface control module supplies 5 V to the signal circuit and a ground for the low reference circuit. The hybrid/EV battery temperature sensor resistance changes with battery temperature. The lower the temperature, the higher the resistance of the sensor. The higher the temperature, the lower the resistance of the sensor. The hybrid/EV powertrain control module 2 uses the battery temperature sensors to determine the hybrid/EV battery module temperature to control the battery cooling system operation.

Conditions for Running the DTC

- The Hybrid/EV Powertrain Control Module 2 and Hybrid/EV Battery Energy Control Module are awake and communicating.
- None of the following DTCs are set: P0A9C, P0A9D, P0A9E, P0AC6, P0AC7, P0AC8, P0ACB, P0ACC, P0ACD, P0AE9, P0AEA, P0AEB, P0BC3, P0BC4, P0BC5, P0C34, P0C35, P0C36, P0C7D, P0C7E, P0C7F, P0C82, P0C83, P0C84, P0C89, P0C8A, P0C8B, P0C8E, P0C8F, P0C90, P0C93, P0C94, P0C95, P0C98, P0C99, P0C9A, P0CA9, P0CAA, P0CAB, P0CAE, P0CAF, P0CB0, P0CB3, P0CB4, P0CB5, P0CB8, P0CB9, P0CBA, P1E8E, P1E8F, P1E90, P1E91, P1E93, P1E94, P1E95, P1E96, P1E97, P1E99, P1E9A, P1E9B, P1E9C, P1E9D, P1E9F, P1EA0, P1EA1, P1EA2, P1EA3, P1EA5, P1EB1, P1EB2, P1EB3, P1EB4, P1EB5, U2401, U2603, U2604, U2605, or U2606.

Conditions for Setting the DTC

The maximum sensed temperature in the Hybrid/EV Battery Pack is greater than 60°C (140°F).

Action Taken When the DTC Sets

- DTC P0A7E is a type A DTC.
- All of the battery contactors will open.

Conditions for Clearing the DTC

DTC P0A7E is a type A DTC.

Reference Information

Schematic Reference

- *Hybrid/EV Cooling Schematics on page 9-201*
- *Hybrid/EV Energy Storage Schematics on page 9-348*

Connector End View Reference

Component Connector End Views on page 11-455

Description and Operation

Hybrid Cooling System Description and Operation on page 9-343

Electrical Information Reference

- *Circuit Testing on page 11-871*
- *Connector Repairs on page 11-895*
- *Testing for Intermittent Conditions and Poor Connections on page 11-877*
- *Wiring Repairs on page 11-883*

DTC Type Reference

Powertrain Diagnostic Trouble Code (DTC) Type Definitions on page 6-92

Scan Tool Reference

Control Module References on page 6-3 for scan tool information

Special Tools

- *EL-48571* High Voltage Battery Pin Out Box
- *EL-48571-50* High Voltage Battery Pin Out Box Cable
- *EL-48900* HEV Safety Kit

For equivalent regional tools, refer to *Special Tools on page 9-344*.

Circuit/System Verification

1. Vehicle in Service Mode.
2. Verify that DTC P0A9C-P0A9E, P0AC6-P0ACD, P0AE9-P0AEB, P0BC3-P0BC5, P0C34-P0C36, P0C7D-P0C8B, P0C43–P0C45, P0C47, P0C4A,

P0CD6, P0CD7, P0CD8, P0CE0–P0CE3, P0CE6, P0CE7, P0CE9, P0CED, P148A-P148C, P1EC6–P1EC8, or P1E8C is not set.

⇒ **If DTCs are set**

Refer to *Diagnostic Trouble Code (DTC) List - Vehicle on page 6-92*

⇓ **If no DTC is set**

3. Observe the scan tool Hybrid/EV Powertrain Control Module 2 Maximum Hybrid Battery Module Temperature. The readings should be between -39 and +60°C (-38.2 and +140°F).

⇒ **The readings are not within the specified range**

Refer to Circuit/System Testing.

⇓ **The readings are within the specified range**

4. All OK.

Circuit/System Testing

Danger: Always perform the High Voltage Disabling procedure prior to servicing any High Voltage component or connection. Personal Protection Equipment (PPE) and proper procedures must be followed.

The High Voltage Disabling procedure will perform the following tasks:

- ***Identify how to disable high voltage.***
- ***Identify how to test for the presence of high voltage.***
- ***Identify condition under which high voltage is always present and personal protection equipment (PPE) and proper procedures must be followed.***

Failure to follow the procedures exactly as written may result in serious injury or death.

Note: The Battery Pack will utilize an exchange program. Please consult the most recent revision of bulletin/PI #PIP5112, available in Service Information (SI), for a list of approved Battery Pack service procedures. Components that may be removed and serviced without exchanging the complete battery pack are identified in the bulletin/PI. Please contact the GM Technical Assistance Center if you have any questions.

1. Vehicle OFF, disable the high voltage. Refer to *High Voltage Disabling on page 9-363*.
2. Remove the A4 Hybrid/EV Battery Pack cover. Refer to *Drive Motor Battery Cover Replacement on page 9-449*

Note: Do not leave the EL-48571 connected to the hybrid/EV battery section harness or leave the hybrid/EV battery section harness disconnected from the hybrid/EV battery section for more than one hour.

Leaving the EL-48571 connected to the hybrid/EV battery section harness or leaving the hybrid/EV battery section harness disconnected from the hybrid/EV battery section for more than one hour will result in an unrecoverable, unbalanced Hybrid/EV battery section.

3. Disconnect the harness connector at the appropriate C4 Hybrid/EV Battery Section harness connector. Connect the *EL-48571* High Voltage Battery Pin Out Box. Insert the DMM probes into the EL-48571 test cavities.
4. Test for 9.9–13.4k Ω at 21.11°C (70°F) between each of the signal circuit and low reference circuit terminals at each harness connector for all of the C4 Hybrid/EV Battery Sections. Refer to *EL-48571 High Voltage Battery Pin Out Box Reference on page 9-368*. The resistance of each temperature sensor should be within the specified range, and within 1k Ω of each other.

⇒ **If not within the specified range or within 1k Ω of each other**

Replace the appropriate B32 C4 Hybrid/EV Battery Temperature Sensor.

⇓ **If within the specified range and within 1k Ω of each other**

5. For Hybrid/EV Battery Section 1–5, replace the K16 Battery Energy Control Module.

   For Hybrid/EV Battery Section 6, replace the K112 Hybrid/EV Battery Interface Control Module.

Repair Instructions

Perform the *Diagnostic Repair Verification on page 6-123* after completing the repair.

- *Cell Battery High Voltage Sensor Replacement (Temperature Sensors) on page 9-461* for B32 Hybrid/EV Battery Temperature Sensor replacement.
- *Drive Motor Battery Replacement and Shipping Preparation on page 9-524*
- *Control Module References on page 6-3* for hybrid/EV battery interface control modules replacement, programming and setup.

DTC P0A9C-P0A9E, P0AC6-P0ACD, P0AE9-P0AEB, P0BC3-P0BC5, or P0C34-P0C36

Diagnostic Instructions

- Perform the *Diagnostic System Check - Vehicle on page 6-91* prior to using this diagnostic procedure.
- Review *Strategy Based Diagnosis on page 6-83* for an overview of the diagnostic approach.
- *Diagnostic Procedure Instructions on page 6-84* provides an overview of each diagnostic category.

DTC Descriptors

DTC P0A9C: Hybrid/EV Battery Temperature Sensor 1 Performance
DTC P0A9D: Hybrid/EV Battery Temperature Sensor 1 Circuit Low Voltage
DTC P0A9E: Hybrid/EV Battery Temperature Sensor 1 Circuit High Voltage
DTC P0AC6: Hybrid/EV Battery Temperature Sensor 2 Performance
DTC P0AC7: Hybrid/EV Battery Temperature Sensor 2 Circuit Low Voltage
DTC P0AC8: Hybrid/EV Battery Temperature Sensor 2 Circuit High Voltage
DTC P0ACB: Hybrid/EV Battery Temperature Sensor 3 Performance
DTC P0ACC: Hybrid/EV Battery Temperature Sensor 3 Circuit Low Voltage
DTC P0ACD: Hybrid/EV Battery Temperature Sensor 3 Circuit High Voltage
DTC P0AE9: Hybrid/EV Battery Temperature Sensor 4 Performance
DTC P0AEA: Hybrid/EV Battery Temperature Sensor 4 Circuit Low Voltage
DTC P0AEB: Hybrid/EV Battery Temperature Sensor 4 Circuit High Voltage
DTC P0BC3: Hybrid/EV Battery Temperature Sensor 5 Performance
DTC P0BC4: Hybrid/EV Battery Temperature Sensor 5 Circuit Low Voltage
DTC P0BC5: Hybrid/EV Battery Temperature Sensor 5 Circuit High Voltage
DTC P0C34: Hybrid/EV Battery Temperature Sensor 6 Performance
DTC P0C35: Hybrid/EV Battery Temperature Sensor 6 Circuit Low Voltage
DTC P0C36: Hybrid/EV Battery Temperature Sensor 6 Circuit High Voltage

Circuit/System Description

The hybrid/EV battery pack has 6 hybrid/EV battery temperature sensors. The temperature sensor is a variable resistor that measures the temperature of the hybrid/EV battery cell groups. The battery energy control module supplies 5 V to the signal circuit and a ground for the low reference circuit. The hybrid/EV battery temperature sensor resistance changes with battery temperature. The lower the temperature, the higher the resistance of the sensor. The higher the temperature, the lower the resistance of the sensor. The hybrid/EV powertrain control module 2 uses the battery temperature sensors to determine the hybrid/EV battery module temperature to control the battery cooling system operation.

Conditions for Running the DTC

P0A9C, P0AC6, P0ACB, P0AE9, P0BC3, and P0C34

None of the following DTCs are set: P0A9C, P0A9D, P0A9E, P0AC6, P0AC7, P0AC8, P0ACB, P0ACC, P0ACD, P0AE9, P0AEA, P0AEB, P0BC3, P0BC4, P0BC5, P0C34, P0C35, P0C36, P0C89, P0C8A, P0C8B, P0C8E, P0C8F, P0C90, P0C93, P0C94, P0C95, P0C98, P0C99, P0C9A, P0CA9, P0CAA, P0CAB, P0CAE, P0CAF, P0CB0, P0CB3, P0CB4, P0CB5, P0CB8, P0CB9, P0CBA, P1E8E, P1E8F, P1E90, P1E91, P1E93, P1E94, P1E95, P1E96, P1E97, P1E99, P1E9A, P1E9B, P1E9C, P1E9D, P1E9F, P1EA0, P1EA1, P1EA2, P1EA3, P1EA5, P1EB1, P1EB2, P1EB3, P1EB4, P1EB5, U2401, U2603, U2604, U2605, or U2606.

P0A9D, P0A9E, P0AC7, P0AC8, P0ACC, P0ACD, P0AEA, P0AEB, P0BC4, P0BC5, P0C35, and P0C36

- Hybrid/EV Powertrain Control Module 2 and Battery Energy Control Module are awake and communicating
- None of the following DTCs are set: P1E8E, P1E94, P1E9A, P1EA0, P1FBD, P1FBE, P1FBF, P1FC0, U2603, U2604, U2605, U2606, U2617, U2618, U2619, or U2620.

Conditions for Setting the DTC

P0A9C, P0AC6, P0ACB, P0AE9, P0BC3, and P0C34

The difference between a hybrid/EV battery temperature sensor and the average of the other hybrid/EV battery temperature sensors is greater than a 20° C (36° F).

P0A9D, P0AC7, P0ACC, P0AEA, P0BC4, and P0C35

The hybrid/EV battery temperature sensor is greater than 87.5° C (189.5° F).

P0A9E, P0AC8, P0ACD, P0AEB, P0BC5, and P0C36

The hybrid/EV battery temperature sensor is −40° C (−40° F).

Action Taken When the DTC Sets

- DTCs P0A9C, P0A9D, P0A9E, P0AC6, P0AC7, P0AC8, P0ACB, P0ACC, P0ACD, P0AE9, P0AEA, P0AEB, P0BC3, P0BC4, P0BC5, P0C34, P0C35, and P0C36 are Type B DTCs.
- If six sensors fail, the vehicle will operate in a reduced power mode.

Conditions for Clearing the DTC

DTCs P0A9C, P0A9D, P0A9E, P0AC6, P0AC7, P0AC8, P0ACB, P0ACC, P0ACD, P0AE9, P0AEA, P0AEB, P0BC3, P0BC4, P0BC5, P0C34, P0C35, and P0C36 are Type B DTCs.

Diagnostic Aids

Low or no coolant in the system may set a DTC P0A9D, P0AC7, P0ACC, P0AEA, P0BC4, or P0C35.

Reference Information

Schematic Reference

- *Hybrid/EV Cooling Schematics on page 9-201*
- *Hybrid/EV Energy Storage Schematics on page 9-348*

Connector End View Reference

Component Connector End Views on page 11-455

Description and Operation

Hybrid Cooling System Description and Operation on page 9-343

Electrical Information Reference

- *Temperature Versus Resistance (Hybrid/EV Battery Pack Coolant Temperature Sensor) on page 9-198* or *Temperature Versus Resistance (Hybrid/EV Battery Temperature Sensor) on page 9-198* for Hybrid/EV Battery Temperature Sensor
- *Circuit Testing on page 11-871*
- *Connector Repairs on page 11-895*
- *Testing for Intermittent Conditions and Poor Connections on page 11-877*
- *Wiring Repairs on page 11-883*

DTC Type Reference

Powertrain Diagnostic Trouble Code (DTC) Type Definitions on page 6-92

Scan Tool Reference

Control Module References on page 6-3 for scan tool information

Special Tools

- *EL-48900* HEV Safety Kit
- *EL-50211* Low Voltage Jumper Harness Extension

For equivalent regional tools, refer to *Special Tools on page 9-344*.

Circuit/System Verification

1. Vehicle in Service Mode.
2. Verify that DTC P0C47, P0CE2, P0CE3, P1E8C, P1EC6 P1EC7, or P1EC8 is not set.

⇒ **If any of the DTCs are set**

Refer to *Diagnostic Trouble Code (DTC) List - Vehicle on page 6-92*

⇓ **If none of the DTCs are set**

3. Observe the scan tool Hybrid Battery temperature parameters. The readings should be between −39 and +87°C (−38.2 and +188.6°F) with no greater than a 15°C (27°F) difference between any of the temperature sensor readings.

⇒ **One or more of the readings are not within the specified range**

Refer to Circuit/System Testing.

⇓ **The scan tool parameters listed are within the specified range**

4. All OK.

Circuit/System Testing

Danger: Always perform the High Voltage Disabling procedure prior to servicing any High Voltage component or connection. Personal Protection Equipment (PPE) and proper procedures must be followed.

The High Voltage Disabling procedure will perform the following tasks:

- ***Identify how to disable high voltage.***
- ***Identify how to test for the presence of high voltage.***
- ***Identify condition under which high voltage is always present and personal protection equipment (PPE) and proper procedures must be followed.***

Failure to follow the procedures exactly as written may result in serious injury or death.

Note: The Battery Pack will utilize an exchange program. Please consult the most recent revision of bulletin/PI #PIP5112, available in Service Information (SI), for a list of approved Battery Pack service procedures. Components that may be removed and serviced without exchanging the complete battery pack are identified in the bulletin/PI. Please contact the GM Technical Assistance Center if you have any questions.

1. Vehicle OFF, disable the high voltage at the A4 Hybrid/EV Battery Pack. Refer to *High Voltage Disabling on page 9-363*. Remove the A4 Hybrid/EV Battery Pack cover. Refer to *Drive Motor Battery Cover Replacement on page 9-449*
2. Disconnect the harness connector at the appropriate B32 Hybrid/EV Battery Temperature Sensor.

3. Test for less than 10 Ω between the low reference circuit terminal 2 and ground.

⇒ **If 10 Ω or greater**

3.1. Disconnect the X11 connector harness K16 Battery Energy Control Module.

3.2. Test for less than 2 Ω in the low reference circuit end to end.

⇒ If 2 Ω or greater, replace the Hybrid/EV Battery Pack internal wiring harness.

⇒ If less than 2 Ω, replace the K16 Battery Energy Control Module.

⇓ **If less than 10 Ω**

Note: With the S15 manual service disconnect removed the 12 V battery connected and the Vehicle in Service Mode, may cause additional DTCs to set. Continue with diagnostics and clear any additional DTCs when repairs are complete.

4. Connect the *EL-50211* Low Voltage Jumper Harness Extension. Connect the 12 V battery. Vehicle in Service Mode.
5. Verify with the scan tool the appropriate Hybrid/EV Battery Temperature Sensor is less than −35°C (−38.2°F).

⇒ **If −35°C (−38.2°F) or greater**

5.1. Vehicle OFF, disconnect the X11 harness connector at the K16 Battery Energy Control Module.

5.2. Test for infinite resistance between the signal circuit and ground.

⇒ If less than infinite resistance, replace the Hybrid/EV Battery Pack internal wiring harness.

⇒ If infinite resistance, replace the K16 Battery Energy Control Module.

⇓ **If less than −35°C (−38.2°F)**

6. Install a 3 A fused jumper wire between the signal circuit terminal 1 and the low reference circuit terminal 2. Verify with the scan tool the appropriate Hybrid/EV Battery Temperature Sensor is greater than 80°C (176°F).

⇒ **If less than 80°C (176°F)**

6.1. Vehicle OFF, disconnect the X11 harness connector at the K16 Battery Energy Control Module. Vehicle in Service Mode.

6.2. Test for less than 1 V between the signal circuit terminal and ground.

⇒ If 1 V or greater, replace the Hybrid/EV Battery Pack internal wiring harness.

⇓ If less than 1 V

6.3. Vehicle Off.

6.4. Test for less than 2 Ω in the signal circuit end to end.

⇒ If 2 Ω or greater, replace the Hybrid/EV Battery Pack internal wiring harness.

⇒ If less than 2 Ω, replace the K16 Battery Energy Control Module.

⇓ **If 80°C (176°F) or greater**

7. Test or replace the appropriate B32 Hybrid/EV Battery Temperature Sensor.

Component Testing

1. Vehicle OFF, disconnect the harness connector at the appropriate B32 Hybrid/EV Battery Temperature Sensor.
2. Test for 9.9–13.4 k Ω at approximately 21.11°C (70°F) between the signal terminal and the low reference terminal. Refer to *Temperature Versus Resistance (Hybrid/EV Battery Pack Coolant Temperature Sensor) on page 9-198* or *Temperature Versus Resistance (Hybrid/EV Battery Temperature Sensor) on page 9-198* for Hybrid/EV Battery Pack Coolant Temperature Sensor.

⇒ **If not within the specified range**

Replace the appropriate B32 Hybrid/EV Battery Temperature Sensor.

⇓ **If within the specified range**

3. All OK.

Repair Instructions

Perform the *Diagnostic Repair Verification on page 6-123* after completing the repair.

- *Coolant Temperature Sensor Replacement (Assembly) on page 9-271* or *Coolant Temperature Sensor Replacement (Heater Assembly) on page 9-272* or *Coolant Temperature Sensor Replacement (Coolant Temperature Assembly Sensor) on page 9-273* for B32 Hybrid/EV Battery Temperature Sensor replacement
- *Drive Motor Battery Replacement and Shipping Preparation on page 9-524*
- *Control Module References on page 6-3* for hybrid/EV battery interface control modules replacement, programming and setup.

DTC P0C43-P0C45

Diagnostic Instructions

- Perform the *Diagnostic System Check - Vehicle on page 6-91* prior to using this diagnostic procedure.
- Review *Strategy Based Diagnosis on page 6-83* for an overview of the diagnostic approach.
- *Diagnostic Procedure Instructions on page 6-84* provides an overview of each diagnostic category.

DTC Descriptors

DTC P0C43: Hybrid/EV Battery Pack Coolant Temperature Sensor 1 Performance

DTC P0C44: Hybrid/EV Battery Pack Coolant Temperature Sensor 1 Circuit Low Voltage

DTC P0C45: Hybrid/EV Battery Pack Coolant Temperature Sensor 1 Circuit High Voltage

Circuit/System Description

The hybrid/EV battery has 2 hybrid/EV battery pack coolant temperature sensors. The hybrid/EV battery pack coolant temperature sensors are located in the coolant inlet (sensor 1) and the outlet (sensor 2) of the hybrid/EV battery. The temperature sensor is a variable resistor that measures the temperature of the hybrid/EV battery coolant. The hybrid/EV battery pack coolant temperature sensor resistance changes with battery coolant temperature. The lower the temperature, the higher the resistance of the sensor. The higher the temperature, the lower the resistance of the sensor. The battery energy control module uses the hybrid/EV battery temperature sensors to determine the hybrid/EV battery pack temperature to control the battery cooling and heating operations.

Conditions for Running the DTC

P0C43

- Vehicle in Service Mode.
- The 12 V battery voltage is greater than or equal 10.2 V.
- None of the following DTCs are set: P1E8C, P1E8D, P0C44, P0C47, P0C45, P0C4A, P0CD7, P0CD8, P0A9C, P0A9D, P0A9E, or U0111.
- The coolant pump speed is greater than or equal to 20% for greater than 1 min.
- The hybrid/EV battery pack thermal conditioning mode changes and the elapsed time is greater than or equal to 30 s.

P0C44 and P0C45

- The 12 V battery voltage is greater than or equal to 9 V.
- The Battery Energy Control Module is awake and communicating
- DTC P1A07 is not set.

Conditions for Setting the DTC

P0C43

- The hybrid/EV battery pack thermal conditioning mode is in Active Heat.
- The Hybrid/EV Battery Pack Coolant Temperature Sensor 1 minus the Hybrid/EV Battery Pack Coolant Temperature Sensor 2 is greater than or equal to 30°C (54°F).
- The Hybrid/EV Battery Pack Coolant Temperature Sensor 1 minus the Battery Cell Average Temperature is greater than or equal to 30°C (54°F).

  OR
- The hybrid/EV battery pack thermal conditioning mode is in Active Cool or Bypass.
- The Hybrid/EV Battery Pack Coolant Temperature Sensor 1 minus the Hybrid/EV Battery Pack Coolant Temperature Sensor 2 is greater than or equal to 30°C (54°F).
- The Hybrid/EV Battery Pack Coolant Temperature Sensor 1 minus the Battery Cell Average Temperature is greater than or equal to 30°C (54°F).

  OR
- The hybrid/EV battery pack thermal conditioning mode is in Passive Cool.
- The Hybrid/EV Battery Pack Coolant Temperature Sensor 1 minus the Hybrid/EV Battery Pack Coolant Temperature Sensor 2 is greater than or equal to 55°C (99°F).
- The Hybrid/EV Battery Pack Coolant Temperature Sensor 1 minus the Battery Cell Average Temperature is greater than or equal to 55°C (99°F).

P0C44

The Hybrid/EV Battery Pack Coolant Temperature Sensor 1 is greater than or equal to 87.9°C (190.2°F).

P0C45

The Hybrid/EV Battery Pack Coolant Temperature Sensor 1 is less than -40°C (-40°F).

Action Taken When the DTC Sets

- DTC P0C43-P0C45 are type B DTCs.
- The active heating mode is disabled.

Conditions for Clearing the DTC

DTC P0C43-P0C45 are type B DTCs.

Diagnostic Aids

- Low or no coolant in the system may set a DTC P0C43.
- DTC P0C43-P0C45 will prevent battery heating and the vehicle will be unable to start in cold weather with battery temperatures below −25°C (−13°F).

Reference Information

Schematic Reference

Hybrid/EV Cooling Schematics on page 9-201

Connector End View Reference

Component Connector End Views on page 11-455

Description and Operation

Hybrid Cooling System Description and Operation on page 9-343

Electrical Information Reference

- *Temperature Versus Resistance (Hybrid/EV Battery Pack Coolant Temperature Sensor) on page 9-198* or *Temperature Versus Resistance (Hybrid/EV Battery Temperature Sensor) on page 9-198* for Hybrid/EV Battery Pack Coolant Temperature Sensor
- *Circuit Testing on page 11-871*
- *Connector Repairs on page 11-895*
- *Testing for Intermittent Conditions and Poor Connections on page 11-877*
- *Wiring Repairs on page 11-883*

DTC Type Reference

Powertrain Diagnostic Trouble Code (DTC) Type Definitions on page 6-92

Scan Tool Reference

Control Module References on page 6-3 for scan tool information

Special Tools

- *EL-48900* HEV Safety Kit
- *EL-50211* Low Voltage Jumper Harness Extension

For equivalent regional tools, refer to *Special Tools on page 9-344*.

Circuit/System Verification

1. Vehicle in Service Mode.
2. Verify that DTC P0AC1, P0B10, P0C44, P0C47, P0C4A or P1F18 is not set.

⇒ **If any of the DTCs are set**

Refer to *Diagnostic Trouble Code (DTC) List - Vehicle on page 6-92*

⇓ **If none of the DTCs are set**

3. Observe the scan tool Hybrid/EV Battery Pack Coolant Temperature Sensor 1 parameter. The reading should be between -39 and +85°C (-38.2 and +185°F).

⇒ **The reading is not within the specified range**

Refer to Circuit/System Testing.

⇓ **The reading is within the specified range**

4. Compare the Hybrid/EV Battery Pack Coolant Temperature Sensor 1 and Hybrid/EV Battery Pack Coolant Temperature Sensor 2 parameters. The sensor readings should be within 30°C (54°F) of each other.

⇒ **If not within 30°C (54°F) of each other**

Refer to Circuit/System Testing.

⇓ **If within 30°C (54°F) of each other**

5. All OK.

Circuit/System Testing

Danger: Always perform the High Voltage Disabling procedure prior to servicing any High Voltage component or connection. Personal Protection Equipment (PPE) and proper procedures must be followed.

The High Voltage Disabling procedure will perform the following tasks:

- ***Identify how to disable high voltage.***
- ***Identify how to test for the presence of high voltage.***
- ***Identify condition under which high voltage is always present and personal protection equipment (PPE) and proper procedures must be followed.***

Failure to follow the procedures exactly as written may result in serious injury or death.

Note: The Battery Pack will utilize an exchange program. Please consult the most recent revision of bulletin/PI #PIP5112, available in Service Information (SI), for a list of approved Battery Pack service procedures. Components that may be removed and serviced without exchanging the

complete battery pack are identified in the bulletin/PI. Please contact the GM Technical Assistance Center if you have any questions.

1. Vehicle OFF, disable the high voltage. Refer to *High Voltage Disabling on page 9-363*. Remove the A4 Hybrid/EV Battery Pack cover. Refer to *Drive Motor Battery Cover Replacement on page 9-449*. Disconnect the harness connector at the B204A Hybrid/EV Battery Pack Coolant Temperature Sensor 1.
2. Test for less than 10 Ω between the low reference circuit terminal 2 and ground.

⇒ **If 10 Ω or greater**

2.1. Disconnect the X11 connector harness at the K16 Battery Energy Control Module.

2.2. Test for less than 2 Ω in the low reference circuit end to end.

⇒ If 2 Ω or greater, replace the Hybrid/EV Battery Pack internal wiring harness.

⇒ If less than 2 Ω, replace the K16 Battery Energy Control Module.

⇓ **If less than 10 Ω**

Note: With the S15 manual service disconnect removed the 12 V battery connected and the Vehicle in Service Mode, may cause additional DTCs to set. Continue with diagnostics and clear any additional DTCs when repairs are complete.

3. Connect the *EL-50211* Low Voltage Jumper Harness Extension. Connect the 12 V battery. Vehicle in Service Mode.
4. Verify the scan tool Hybrid/EV Battery Pack Coolant Temperature Sensor 1 is less than −35°C (−38.2°F).

⇒ **If −35°C (−38.2°F) or greater**

4.1. Vehicle OFF, disconnect the X11 harness connector at the K16 Battery Energy Control Module.

4.2. Test for infinite resistance between the signal circuit terminal 7 and ground.

⇒ If less than infinite resistance, replace the Hybrid/EV Battery Pack internal wiring harness.

⇒ If infinite resistance, replace the K16 Battery Energy Control Module.

⇓ **If less than −35°C (−38.2°F)**

5. Install a 3 A fused jumper wire between the signal circuit terminal 1 and the low reference circuit terminal 2. Verify the scan tool Hybrid/EV Battery Pack Coolant Temperature Sensor 1 is greater than 80°C (176°F).

⇒ **If less than 80°C (176°F)**

5.1. Vehicle OFF, disconnect the X11 harness connector at the K16 Battery Energy Control Module. Vehicle in Service Mode.

5.2. Test for less than 1 V between the signal circuit terminal 7 and ground.

⇒ If 1 V or greater, replace the Hybrid/EV Battery Pack internal wiring harness.

⇓ If less than 1 V

5.3. Vehicle OFF.

5.4. Test for less than 2 Ω in the signal circuit end to end.

⇒ If 2 Ω or greater, replace the Hybrid/EV Battery Pack internal wiring harness.

⇒ If less than 2 Ω, replace the K16 Battery Energy Control Module.

⇓ **If 80°C (176°F) or greater**

6. Test or replace the B204A Hybrid/EV Battery Pack Coolant Temperature Sensor 1.

Component Testing

1. Vehicle OFF, disconnect the harness connector at the B204A Hybrid/EV Battery Pack Coolant Temperature Sensor 1.
2. Test for 2.2–3.0k Ω at approximately 21.11°C (70° F) between the signal terminal and the low reference terminal. Refer to *Temperature Versus Resistance (Hybrid/EV Battery Pack Coolant Temperature Sensor) on page 9-198* or *Temperature Versus Resistance (Hybrid/EV Battery Temperature Sensor) on page 9-198* for Hybrid/EV Battery Pack Coolant Temperature Sensor.

⇒ **If not within the specified range**

Replace the B204A Hybrid/EV Battery Pack Coolant Temperature Sensor 1.

⇓ **If within the specified range**

3. All OK.

Repair Instructions

Perform the *Diagnostic Repair Verification on page 6-123* after completing the repair.

- *Coolant Temperature Sensor Replacement (Assembly) on page 9-271* or *Coolant Temperature Sensor Replacement (Heater Assembly) on page 9-272* or *Coolant Temperature Sensor Replacement (Coolant Temperature Assembly Sensor) on page 9-273* for B204A Hybrid/EV Battery Pack Coolant Temperature Sensor 1 replacement
- *Drive Motor Battery Replacement and Shipping Preparation on page 9-524*
- *Control Module References on page 6-3* for battery energy control module replacement, programming and setup.

DTC P0C47, P0C4A, P1E8C, or P1E8D

Diagnostic Instructions

- Perform the *Diagnostic System Check - Vehicle on page 6-91* prior to using this diagnostic procedure.
- Review *Strategy Based Diagnosis on page 6-83* for an overview of the diagnostic approach.
- *Diagnostic Procedure Instructions on page 6-84* provides an overview of each diagnostic category.

DTC Descriptors

DTC P0C47: Hybrid/EV Battery Pack Coolant Pump Control Circuit

DTC P0C4A: Hybrid/EV Battery Pack Coolant Pump Performance

DTC P1E8C: Hybrid/EV Battery Pack Coolant Pump Enable Circuit Low Voltage

DTC P1E8D: Hybrid/EV Battery Pack Coolant Pump Enable Circuit High Voltage

Circuit/System Description

The hybrid/EV battery pack coolant pump circulates coolant through the drive motor battery coolant radiator, drive motor battery coolant cooler, and the hybrid/EV battery pack to control the temperature of the hybrid/EV battery pack. An enable signal from the hybrid/EV powertrain control module 2 to the hybrid/EV battery pack coolant pump provides overall control of the pump. When this circuit is high, the pump can operate. The pump is controlled with a pulse-width modulated signal from the hybrid/EV powertrain control module 2 to the hybrid/EV battery pack coolant pump. The higher the duty cycle the higher the pump speed. The hybrid/EV battery pack coolant pump provides a hard-wired pulse-width modulated feedback signal to the hybrid/EV powertrain control module 2. During normal operation, this feedback signal provides pump speed information to the hybrid/EV powertrain control module 2. The hybrid/EV battery pack coolant pump has some self-diagnostic capability. If the hybrid/EV battery pack coolant pump determines there is an internal fault it provides this information on this same feedback circuit instead of pump speed information.

Conditions for Running the DTC

P0C47

- The 12 V battery voltage is greater than or equal to 10.2 V.
- The hybrid/EV battery pack coolant pump enable is commanded.
- The hybrid/EV battery pack coolant pump is commanded between 5 % and 95 %.

P0C4A

- The 12 V battery voltage is greater than or equal to 10.2 V.
- The hybrid/EV powertrain control module 2 is awake and communicating with the hybrid/EV battery energy control module.
- Runs once per power-up cycle when Vehicle ON or in Charge Mode.
- The hybrid/EV battery pack coolant pump is commanded to 90 %.
- The hybrid/EV battery coolant valve learn is complete.
- None of the following DTCs are set: P0C43, P0C44, P0C45, P0CE2, P0CE3, P0CE5, P0CE6, P0CE7, P1EC6, P1EC7, P1EC8, P1F56, P1F58, P1FFB, P1FFC, P1FFD, or P1FFE.

P1E8C

- The 12 V battery voltage is greater than or equal to 10.2 V.
- The hybrid/EV battery pack coolant pump enable is commanded.

P1E8D

- The 12 V battery voltage is greater than or equal to 10.2 V.
- The hybrid/EV battery pack coolant pump enable is OFF.

Conditions for Setting the DTC

P0C47

The hybrid/EV powertrain control module 2 detects the hybrid/EV battery pack coolant pump control circuit is open, shorted to voltage or shorted to ground.

P0C4A

The hybrid/EV powertrain control module 2 did not see the battery inlet temperature fall greater than or equal to 0.05°C (0.09°F) during the 24 second test period.

P1E8C

The hybrid/EV powertrain control module 2 detects the hybrid/EV battery pack coolant pump control circuit is shorted to ground.

P1E8D

The hybrid/EV powertrain control module 2 detects the hybrid/EV battery pack coolant pump control circuit is open or shorted to voltage .

Action Taken When the DTC Sets

- DTCs P0C47 is a type A DTC.
- DTCs P0C4A, P1E8C, and P1E8D are type B DTCs.

Conditions for Clearing the DTC

- DTCs P0C47 is a type A DTC.
- DTCs P0C4A, P1E8C, and P1E8D are type B DTCs.

Diagnostic Aids

- Low or no coolant in the system may set a DTC P0C4A.
- P1EC5 may cause a DTC P0C4A

Reference Information

Schematic Reference

Hybrid/EV Cooling Schematics on page 9-201

Connector End View Reference

Component Connector End Views on page 11-455

Description and Operation

Hybrid Cooling System Description and Operation on page 9-343

Electrical Information Reference

- *Circuit Testing on page 11-871*
- *Connector Repairs on page 11-895*
- *Testing for Intermittent Conditions and Poor Connections on page 11-877*
- *Wiring Repairs on page 11-883*

DTC Type Reference

Powertrain Diagnostic Trouble Code (DTC) Type Definitions on page 6-92

Scan Tool Reference

Control Module References on page 6-3 for scan tool information

Circuit/System Verification

1. Vehicle in Service Mode.
2. Verify that DTC P0C43, P0C44, P0C45, P0CE0, P0CE2, P0CE3, P0D0A, P0D11, P1EBC, P1EC3, P1EC4, P1EC5, P1EC6, P1EC7, P1EC8, U0111, U185B, or U2602 is not set.

⇒ **If any of the DTCs are set**

Refer to *Diagnostic Trouble Code (DTC) List - Vehicle on page 6-92*

⇓ **If none of the DTCs are set**

3. With the Hybrid/EV Battery Pack Coolant Pump disabled and not running, verify the scan tool parameters listed below:
   - Hybrid/EV Battery Pack Coolant Pump Command is less than 10%.
   - Hybrid/EV Battery Pack Coolant Pump Feedback is 0%.
   - Hybrid/EV Battery Pack Coolant Pump Speed is 50 RPM.

⇒ **The scan tool parameters listed are not the specified values**

Refer to Circuit/System Testing.

⇓ **The scan tool parameters listed are within the specified values**

4. Set the vehicle Charge Mode to IMMEDIATE.
5. Vehicle OFF, connect the charge cord set.
6. With the vehicle charging, the hybrid/EV battery pack coolant pump enabled and not running, verify the scan tool parameters listed below:
   - Hybrid/EV Battery Pack Coolant Pump Command is 10%.
   - Hybrid/EV Battery Pack Coolant Pump Feedback to be 50% +/-5%.
   - Hybrid/EV Battery Pack Coolant Pump Speed is 50 RPM.

⇒ **The scan tool parameters listed are not the specified values**

Refer to Circuit/System Testing.

⇓ **The scan tool parameters listed are within the specified values**

7. Command the Hybrid/EV Battery Pack Coolant Pump to 90%, verify the scan tool parameters listed below:
   - Hybrid/EV Battery Pack Coolant Pump Command to be greater than 10%.
   - Hybrid/EV Battery Pack Coolant Pump Feedback to be 50% +/-5%.
   - Hybrid/EV Battery Pack Coolant Pump Speed is greater than 50 RPM.

⇒ **The scan tool parameters listed are not the specified values**

Refer to Circuit/System Testing.

⇓ **The scan tool parameters listed are within the specified values**

8. All OK.

Circuit/System Testing

1. Vehicle OFF, disconnect the harness connector at the G37 Hybrid/EV Battery Pack Coolant Pump.
2. Test for less than 10 Ω between the ground circuit terminal 4 and ground.

⇒ **If 10 Ω or greater**

Repair the open/high resistance on the ground circuit.

⇓ **If less than 10 Ω**

3. Vehicle in Service Mode.

4. Test for greater than 11.5 V between the B+ circuit terminal 5 and the ground circuit terminal 4.

⇒ **If 11.5 V or less**

4.1. Vehicle OFF, test for infinite resistance between the B+ circuit terminal 5 and ground.

⇒ If less than infinite resistance, repair the short to ground on the circuit.

⇓ If infinite resistance

4.2. Test for less than 2 Ω in the B+ circuit end to end.

⇒ If 2 Ω or greater, repair the open/high resistance in the circuit.

⇒ If less than 2 Ω and the fuse is blown, replace the G37 Hybrid/EV Battery Pack Coolant Pump.

⇓ **If greater than 11.5 V**

5. Connect a test lamp between the enable circuit terminal 1 and the ground circuit terminal 4.
6. Command the Hybrid Battery Pack Coolant Pump Command OFF (10 %) and ON (90 %) with a scan tool. The test lamp should turn OFF and ON when changing between the commanded states.

⇒ **If the test lamp is always illuminated at 10 %**

6.1. Vehicle OFF, disconnect the X2 harness connector at the K114B Hybrid/EV Powertrain Control Module 2. Vehicle in Service Mode.

6.2. Test for less than 1 V between the enable circuit terminal and ground.

⇒ If 1 V or greater, repair the short to voltage on the circuit.

⇒ If less than 1 V, replace the K114B Hybrid/EV Powertrain Control Module 2.

⇒ **If the test lamp does not illuminate at 90 %**

6.1. Vehicle OFF, disconnect the X2 harness connector at the K114B Hybrid/EV Powertrain Control Module 2.

6.2. Test for infinite resistance between the enable circuit and ground.

⇒ If less than infinite resistance, repair the short to ground on the circuit.

⇓ If infinite resistance

6.3. Test for less than 2 Ω in the enable circuit end to end.

⇒ If 2 Ω or greater, repair the open/high resistance in the circuit.

⇒ If less than 2 Ω, replace the K114B Hybrid/EV Powertrain Control Module 2.

⇓ **If the test lamp turns OFF and ON when changing between the commanded states**

7. Connect a test lamp between the control circuit terminal 3 and the B+ circuit terminal 5.
8. Command the Hybrid Battery Pack Coolant Pump Command ON between 20 % and 90 % with a scan tool. Verify that a test lamp changes illumination between bright (20 %) and dim (90 %) between the control circuit terminal 3 and the B+ circuit terminal 5.

⇒ **If the test lamp is always dim or does not illuminate**

8.1. Vehicle OFF, disconnect the X2 harness connector at the K114B Hybrid/EV Powertrain Control Module 2. Vehicle in Service Mode.

8.2. Test for less than 1 V between the control circuit terminal and ground

⇒ If 1 V or greater, repair the short to voltage on the circuit.

⇓ If less than 1 V

8.3. Vehicle OFF.

8.4. Test for less than 2 Ω in the control circuit end to end.

⇒ If 2 Ω or greater, repair the open/high resistance in the circuit.

⇒ If less than 2 Ω, replace the K114B Hybrid/EV Powertrain Control Module 2.

⇒ **If the test lamp is always bright**

8.1. Vehicle OFF, disconnect the X2 harness connector at the K114B Hybrid/EV Powertrain Control Module 2.

8.2. Test for infinite resistance between the control circuit and ground.

⇒ If less than infinite resistance, repair the short to ground on the circuit.

⇓ If infinite resistance

8.3. Test for less than 2 Ω in the control circuit end to end.

⇒ If 2 Ω or greater, repair the open/high resistance in the circuit.

⇒ If less than 2 Ω, replace the K114B Hybrid/EV Powertrain Control Module 2.

⇓ **The test lamp changes illumination between bright (20 %) and dim (90 %)**

9. Command the Hybrid Battery Pack Coolant Pump Command OFF.
10. Verify the scan tool, Hybrid Battery Pack Coolant Pump Feedback parameter is less than 10 %.

⇒ **If 10 % or greater**

10.1. Vehicle OFF, disconnect the X2 harness connector at the K114B Hybrid/EV Powertrain Control Module 2.

10.2. Test for infinite resistance between the feedback circuit terminal 2 and ground.

⇒ If less than infinite resistance, repair the short to ground on the circuit.

⇒ If infinite resistance, replace the K114B Hybrid/EV Powertrain Control Module 2.

⇓ **If less than 10 %**

11. Install a 3 A fused jumper wire between the feedback circuit terminal 2 and the ground circuit terminal 4.

12. Verify the scan tool, Hybrid Battery Pack Coolant Pump Feedback parameter is greater than 90 %.

⇒ **If less than 90 %**

12.1. Vehicle OFF, disconnect the X2 harness connector at the K114B Hybrid/EV Powertrain Control Module 2.

12.2. Test for less than 1 V between the feedback circuit terminal and ground.

⇒ If 1 V or greater, repair the short to voltage on the circuit.

⇓ If less than 1 V

12.3. Test for less than 2 Ω in the control circuit end to end.

⇒ If 2 Ω or greater, repair the open/high resistance in the circuit.

⇒ If less than 2 Ω, replace the K114B Hybrid/EV Powertrain Control Module 2.

⇓ **If 90 % or greater**

13. Replace the G37 Hybrid/EV Battery Pack Coolant Pump.

Repair Instructions

Perform the *Diagnostic Repair Verification on page 6-123* after completing the repair.

- *Drive Motor Battery Coolant Pump Replacement on page 9-315*
- *Control Module References on page 6-3* for hybrid/EV powertrain control module 2 replacement, programming and setup.

DTC P0CD6-P0CD8

Diagnostic Instructions

- Perform the *Diagnostic System Check - Vehicle on page 6-91* prior to using this diagnostic procedure.
- Review *Strategy Based Diagnosis on page 6-83* for an overview of the diagnostic approach.
- *Diagnostic Procedure Instructions on page 6-84* provides an overview of each diagnostic category.

DTC Descriptors

DTC P0CD6: Hybrid/EV Battery Pack Coolant Temperature Sensor 2 Performance
DTC P0CD7: Hybrid/EV Battery Pack Coolant Temperature Sensor 2 Circuit Low Voltage
DTC P0CD8: Hybrid/EV Battery Pack Coolant Temperature Sensor 2 Circuit High Voltage

Circuit/System Description

The hybrid/EV battery has 2 hybrid/EV battery pack coolant temperature sensors. The hybrid/EV battery pack coolant temperature sensors are located in the coolant inlet (sensor 1) and the outlet (sensor 2) of the hybrid/EV battery. The temperature sensor is a variable resistor that measures the temperature of the hybrid/EV battery coolant. The hybrid/EV battery pack coolant temperature sensor resistance changes with battery coolant temperature. The lower the temperature, the higher the resistance of the sensor. The higher the temperature, the lower the resistance of the sensor. The battery energy control module uses the hybrid/EV battery temperature sensors to determine the hybrid/EV battery pack temperature to control the battery cooling operation.

Conditions for Running the DTC

P0CD6

- The hybrid/EV powertrain control module 2 is awake and communicating.
- The 12 V battery voltage is greater than or equal to 10.2 V.
- The coolant pump speed is greater than or equal to 20% for more than 1 min.
- None of the following DTCs are set: P0A9C, P0A9D, P0A9E, P0C44, P0C45, P0C47, P0C4A, P0CD7, P0CD8, P1E8C, P1E8D, or U0111.

P0CD7 and P0CD8

- The hybrid/EV powertrain control module 2 and battery energy control module is awake and communicating.
- The 12 V battery voltage is greater than or equal to 9 V.
- DTC P1A07 is not set.

Conditions for Setting the DTC

P0CD6

- The Hybrid/EV Battery Pack Coolant Temperature Sensor 2 minus the Hybrid/EV Battery Pack Coolant Temperature Sensor 1 is greater than or equal to 20°C (36°F).
- The Hybrid/EV Battery Pack Coolant Temperature Sensor 2 minus the Battery Cell Average Temperature is greater than or equal to 20°C (36°F).

P0CD7

The coolant temperature 2 is greater than or equal to 87.5°C (189.5°F) for 2.5 s.

P0CD8

The coolant temperature 2 is less than or equal to -40° C (-40°F) for 2.5 s.

Action Taken When the DTC Sets

DTC P0CD6-P0CD8 are type B DTCs.

Conditions for Clearing the DTC

DTC P0CD6-P0CD8 are type B DTCs.

Diagnostic Aids

- Low or no coolant in the system may set a DTC P0CD6.
- The Hybrid/EV Powertrain Control Module 2 will use battery pack cell temperatures as a default.

Reference Information

Schematic Reference

Hybrid/EV Cooling Schematics on page 9-201

Connector End View Reference

Component Connector End Views on page 11-455

Description and Operation

Hybrid Cooling System Description and Operation on page 9-343

Electrical Information Reference

- *Temperature Versus Resistance (Hybrid/EV Battery Pack Coolant Temperature Sensor) on page 9-198* or *Temperature Versus Resistance (Hybrid/EV Battery Temperature Sensor) on page 9-198* for Hybrid/EV Battery Pack Coolant Temperature Sensor
- *Circuit Testing on page 11-871*
- *Connector Repairs on page 11-895*
- *Testing for Intermittent Conditions and Poor Connections on page 11-877*
- *Wiring Repairs on page 11-883*

DTC Type Reference

Powertrain Diagnostic Trouble Code (DTC) Type Definitions on page 6-92

Scan Tool Reference

Control Module References on page 6-3 for scan tool information

Special Tools

- *EL-48900* HEV Safety Kit
- *EL-50211* Low Voltage Jumper Harness Extension

For equivalent regional tools, refer to *Special Tools on page 9-344*.

Circuit/System Verification

1. Vehicle in Service Mode.
2. Verify that DTC P0AC1, P0C44, P0C47, P0C4A or P1F18 is not set.

⇒ **If any DTC is set**

Refer to *Diagnostic Trouble Code (DTC) List - Vehicle on page 6-92*

⇓ **If none of the DTCs are set**

3. Observe the scan tool Hybrid\EV Battery Pack Coolant Temperature Sensor 2 parameter. The readings should be between -39° C and +85° C (-38.2° F and +185° F).

⇒ **If not within the specified range**

Refer to Circuit/System Testing.

⇓ **If within the specified range**

4. Compare the Hybrid\EV Battery Pack Coolant Temperature Sensor 2 and Hybrid\EV Battery Pack Coolant Temperature Sensor 1 parameters. The sensor readings should be within 30° C (54° F) of each other.

⇒ **If not within 30° C (54° F) of each other**

Refer to Circuit/System Testing.

⇓ **If within 30° C (54° F) of each other**

5. All OK.

Circuit/System Testing

Danger: Always perform the High Voltage Disabling procedure prior to servicing any High Voltage component or connection. Personal Protection Equipment (PPE) and proper procedures must be followed.

The High Voltage Disabling procedure will perform the following tasks:

- ***Identify how to disable high voltage.***
- ***Identify how to test for the presence of high voltage.***
- ***Identify condition under which high voltage is always present and personal protection equipment (PPE) and proper procedures must be followed.***

Failure to follow the procedures exactly as written may result in serious injury or death.

Note: The Battery Pack will utilize an exchange program. Please consult the most recent revision of bulletin/PI #PIP5112, available in Service Information (SI), for a list of approved Battery Pack service procedures. Components that may be removed and serviced without exchanging the complete battery pack are identified in the bulletin/PI. Please contact the GM Technical Assistance Center if you have any questions.

1. Vehicle OFF, disable the high voltage. Refer to *High Voltage Disabling on page 9-363*. Remove the A4 Hybrid/EV Battery Pack cover. Refer to *Drive Motor Battery Cover Replacement on page 9-449*. Disconnect the harness connector at the B204B Hybrid/EV Battery Pack Coolant Temperature Sensor 2.
2. Test for less than 10 Ω between the low reference circuit terminal 2 and ground.

⇒ **If 10 Ω or greater**

2.1. Disconnect the X11 connector harness at the K16 Battery Energy Control Module.

2.2. Test for less than 2 Ω in the low reference circuit end to end.

⇒ If 2 Ω or greater, replace the Hybrid/EV Battery Pack internal wiring harness.

⇒ If less than 2 Ω, replace the K16 Battery Energy Control Module.

⇓ **If less than 10 Ω**

Note: With the S15 manual service disconnect removed the 12 V battery connected and the Vehicle in Service Mode, may cause additional DTCs to set. Continue with diagnostics and clear any additional DTCs when repairs are complete.

3. Connect the *EL-50211* Low Voltage Jumper Harness Extension. Connect the 12 V battery. Vehicle in Service Mode.
4. Verify the scan tool Hybrid/EV Battery Pack Coolant Temperature Sensor 2 is less than -35°C (-38.2°F).

⇒ **If −35°C (−38.2°F) or greater**

4.1. Vehicle OFF, disconnect the X11 harness connector at the K16 Battery Energy Control Module.

4.2. Test for infinite resistance between the signal circuit terminal 8 and ground.

⇒ If less than infinite resistance, replace the Hybrid/EV Battery Pack internal wiring harness.

⇒ If infinite resistance, replace the K16 Battery Energy Control Module.

⇓ **If less than -35°C (-38.2°F)**

5. Install a 3 A fused jumper wire between the signal circuit terminal 1 and the low reference circuit terminal 2. Verify the scan tool Hybrid Battery Pack Coolant Temperature Sensor 2 is greater than 80° C (176°F).

⇒ **If less than 80° C (176° F)**

5.1. Vehicle OFF, disconnect the harness connector at the K16 Battery Energy Control Module. Vehicle in Service Mode.

5.2. Test for less than 1 V between the signal circuit terminal 8 and ground.

⇒ If 1 V or greater, replace the Hybrid/EV Battery Pack internal wiring harness.

⇓ If less than 1 V

5.3. Vehicle OFF.

5.4. Test for less than 2 Ω in the signal circuit end to end.

⇒ If 2 Ω or greater, replace the Hybrid/EV Battery Pack internal wiring harness.

⇒ If less than 2 Ω, replace the K16 Battery Energy Control Module.

⇓ **If 80°C (176°F) or greater**

6. Replace the B204B Hybrid/EV Battery Pack Coolant Temperature Sensor 2.

Component Testing

1. Vehicle OFF, disconnect the harness connector at the B204B Hybrid/EV Battery Pack Coolant Temperature Sensor 2.
2. Test for 2.2–3.0k Ω at approximately 21.11°C (70° F) between the signal terminal and the low reference terminal. Refer to *Temperature Versus Resistance (Hybrid/EV Battery Pack Coolant Temperature Sensor) on page 9-198* or *Temperature Versus Resistance (Hybrid/EV Battery Temperature Sensor) on page 9-198* for Hybrid/EV Battery Pack Coolant Temperature Sensor.

⇒ **If not within the specified range**

Replace the B204B Hybrid/EV Battery Pack Coolant Temperature Sensor 2.

⇓ **If within the specified range**

3. All OK.

Repair Instructions

Perform the *Diagnostic Repair Verification on page 6-123* after completing the repair.

- *Coolant Temperature Sensor Replacement (Assembly) on page 9-271* or *Coolant Temperature Sensor Replacement (Heater Assembly) on page 9-272* or *Coolant Temperature Sensor Replacement (Coolant Temperature Assembly Sensor) on page 9-273* for B204B hybrid/EV battery pack coolant temperature sensor 2 replacement
- *Drive Motor Battery Replacement and Shipping Preparation on page 9-524*
- *Control Module References on page 6-3* for battery energy control module replacement, programming and setup.

DTC P0CE2, P0CE3, P1EC7, P1EC8, or P1F56

Diagnostic Instructions

- Perform the *Diagnostic System Check - Vehicle on page 6-91* prior to using this diagnostic procedure.
- Review *Strategy Based Diagnosis on page 6-83* for an overview of the diagnostic approach.
- *Diagnostic Procedure Instructions on page 6-84* provides an overview of each diagnostic category.

DTC Descriptors

DTC P0CE2: Hybrid/EV Battery Pack Coolant Control Valve Control Circuit 1 Low Voltage
DTC P0CE3: Hybrid/EV Battery Pack Coolant Control Valve Control Circuit 1 High Voltage
DTC P1EC7: Hybrid/EV Battery Pack Coolant Control Valve Control Circuit 2 Low Voltage
DTC P1EC8: Hybrid/EV Battery Pack Coolant Control Valve Control Circuit 2 High Voltage
DTC P1F56: Hybrid/EV Battery Pack Coolant Control Valve Stuck

Circuit/System Description

The hybrid/EV battery pack coolant control valve drive circuit in the hybrid/EV powertrain control module 2 is two control circuit, terminal 1 (Drive A) and terminal 2 (Drive B), that can drive the valve motor in a forward or reverse direction. One end position of the range is the Radiator connection, the middle position is the bypass position and the other end position is the chiller position.

Conditions for Running the DTC

P0CE2

- The hybrid/EV powertrain control module 2 is awake and communicating.
- The 12 V battery voltage is greater than or equal to 10.2 V.
- Hybrid/EV Battery Pack Coolant Control Valve is being commanded to move in a reverse direction.

P0CE3

- The hybrid/EV powertrain control module 2 is awake and communicating.
- The 12 V battery voltage is greater than or equal to 10.2 V.
- Hybrid/EV Battery Pack Coolant Control Valve is stopped or being commanded to move in a forward direction.

P1EC7

- The hybrid/EV powertrain control module 2 is awake and communicating.
- The 12 V battery voltage is greater than or equal to 10.2 V.
- Hybrid/EV Battery Pack Coolant Control Valve is being commanded to move in a forward direction.

P1EC8

- The hybrid/EV powertrain control module 2 is awake and communicating.
- The 12 V battery voltage is greater than or equal to 10.2 V.
- Hybrid/EV Battery Pack Coolant Control Valve is stopped or being commanded to move in a reverse direction.

P1F56

- The hybrid/EV powertrain control module 2 is awake and communicating.
- Vehicle ON.
- The 12 V battery voltage is greater than or equal to 10 V.
- The battery minimum temperature and battery inlet temperature are above −26°C (−14.8°F)
- None of the following DTCs are set: P0CE2, P0CE3, P0CE6, P0CE7, P1EC7, P1EC8

Conditions for Setting the DTC

P0CE2

The Hybrid/EV Powertrain Control Module 2 detects control circuit terminal 1 (Drive A) is grounded during a period when the Hybrid/EV Powertrain Control Module 2 is commanding 12 V on the control circuit terminal 1 (Drive A). This occurs when the valve is commanded towards the 100 % chiller position.

P0CE3

The Hybrid/EV Powertrain Control Module 2 detects control circuit terminal 1 (Drive A) has 12 V during a period when the Hybrid/EV Powertrain Control Module 2 is commanding 0 V on the control circuit terminal 1 (Drive A). This occurs when the valve is commanded towards the radiator position.

P1EC7

The Hybrid/EV Powertrain Control Module 2 detects control circuit terminal 2 (Drive B) is grounded during a period when the Hybrid/EV Powertrain Control Module 2 is commanding 12 V on the control circuit terminal 2 (Drive B). This occurs when the valve is commanded towards the radiator position.

P1EC8

The Hybrid/EV Powertrain Control Module 2 detects control circuit terminal 2 (Drive B) has 12 V during a period when the Hybrid/EV Powertrain Control Module 2 is commanding 0 V on the control circuit terminal 2 (Drive B). This occurs when the valve is commanded towards the 100 % chiller position.

P1F56

- The control circuit terminal 1 (Drive A) or control circuit terminal 2 (Drive B) is open.
- If during any learn procedure the valve does not reach the end-stops of approximately 30.28 % and 69.52 % in 22 s or less.

  OR
- If during any learn procedure the valve feedback the end-stops are less than 30.28 % or greater than 69.52 %.

  OR
- If during any learn procedure the valve difference between the two end-stops is less than 15 % or greater than 33 %.

Action Taken When the DTC Sets

DTCs P0CE2, P0CE3, P1EC7, P1EC8, and P1F56 are type B DTCs

Conditions for Clearing the DTC

- DTCs P0CE2, P0CE3, P1EC7, P1EC8, and P1F56 are type B DTCs
- The *Hybrid/EV Battery Pack Coolant Control Valve Learn on page 9-343* will need to be performed.

Diagnostic Aids

- Verify that the wire harness connector does not have corrosion when diagnosing a DTC P0CE2, P0CE3, P1EC7, P1EC8, or P1F56.
- After a valve replacement the *Hybrid/EV Battery Pack Coolant Control Valve Learn on page 9-343* will need to be performed to prevent resetting DTCs.

Reference Information

Schematic Reference

Hybrid/EV Cooling Schematics on page 9-201

Connector End View Reference

Component Connector End Views on page 11-455

Description and Operation

Hybrid Cooling System Description and Operation on page 9-343

Electrical Information Reference

- *Circuit Testing on page 11-871*
- *Connector Repairs on page 11-895*
- *Testing for Intermittent Conditions and Poor Connections on page 11-877*
- *Wiring Repairs on page 11-883*

DTC Type Reference

Powertrain Diagnostic Trouble Code (DTC) Type Definitions on page 6-92

Scan Tool Reference

Control Module References on page 6-3 for scan tool information

Circuit/System Verification

1. Vehicle in Service Mode.
2. Verify that DTC P0CE5, P0CE6, P0CE7, or P1F58 are not set.

⇒ **If any of the DTCs are set**

Refer to *Diagnostic Trouble Code (DTC) List - Vehicle on page 6-92*

⇓ **If none of the DTCs are set**

3. Verify that DTC P1F56 is not set.

⇒ **If DTC P1F56 is set**

Perform the *Hybrid/EV Battery Pack Coolant Control Valve Learn on page 9-343* procedure.

⇓ **If DTC P1F56 is not set**

4. Verify that the DTC P0CE2, P0CE3, P1EC7, P1EC8, or P1F56 does not set while operating the vehicle under the Conditions for Running the DTC. You may also operate the vehicle under the conditions that you observed from the Freeze Frame/Failure Records data.

⇒ **If any of the DTCs are set**

Refer to Circuit/System Testing.

⇓ **If none of the DTCs are set**

5. With a scan tool, command the Hybrid/EV Battery Pack Coolant Control Solenoid Valve Command between 10 %–90 %. Verify that the Hybrid/EV Battery Pack Coolant Control Solenoid Valve Feedback matches the command. There may be a 30 second delay between the command and valve response.

⇒ **The Hybrid/EV Battery Pack Coolant Control Solenoid Valve Feedback does not match the command**

Refer to Circuit/System Testing.

⇓ **The Hybrid/EV Battery Pack Coolant Control Solenoid Valve Feedback matches the command**

6. All OK.

Circuit/System Testing

1. Vehicle OFF, disconnect the harness connector at the Q65 Hybrid/EV Battery Pack Coolant Control Valve. Connect a test lamp between control circuit terminal 1 and control circuit terminal 2. Vehicle in Service Mode.
2. Command the Hybrid/EV Battery Pack Coolant Control Solenoid Valve between Normal and Bypass with a scan tool. Verify that the test lamp illuminates momentarily between each command.

⇒ **If the test lamp does not illuminate**

2.1. Vehicle OFF, disconnect the X2 harness connector at the K114B Hybrid/EV Powertrain Control Module 2.

2.2. Test for less than 2 Ω in each of the control circuits end to end.

⇒ If 2 Ω or greater, repair the open/high resistance in the circuit.

⇒ If less than 2 Ω, replace the K114B Hybrid/EV Powertrain Control Module 2. After the repair, with a scan tool, perform the *Hybrid/EV Battery Pack Coolant Control Valve Learn on page 9-343* procedure.

⇒ **If the test lamp illuminates only on one command**

2.1. Vehicle OFF, disconnect the X2 harness connector at the K114B Hybrid/EV Powertrain Control Module 2. Vehicle in Service Mode.

2.2. Test for less than 1 V between each of the control circuit terminals and ground

⇒ If 1 V or greater, repair the short to voltage on the circuit.

⇓ If less than 1 V

2.3. Vehicle OFF.

2.4. Test for infinite resistance between each of the control circuits and ground.

⇒ If less than infinite resistance, repair the short to ground on the circuit.

⇒ If infinite resistance, replace the K114B Hybrid/EV Powertrain Control Module 2. After the repair, with a scan tool, perform the *Hybrid/EV Battery Pack Coolant Control Valve Learn on page 9-343* procedure.

⇓ **The test lamp illuminates momentarily between each command**

3. Replace the Q65 Hybrid/EV Battery Pack Coolant Control Valve.

Repair Instructions

Perform the *Diagnostic Repair Verification on page 6-123* after completing the repair.

- *Drive Motor Battery Coolant Flow Control Valve Replacement on page 9-318*
- *Control Module References on page 6-3* for hybrid/EV powertrain control module 2 replacement, programming and setup.

DTC P0CE5-P0CE7 and P1F58

Diagnostic Instructions

- Perform the *Diagnostic System Check - Vehicle on page 6-91* prior to using this diagnostic procedure.
- Review *Strategy Based Diagnosis on page 6-83* for an overview of the diagnostic approach.
- *Diagnostic Procedure Instructions on page 6-84* provides an overview of each diagnostic category.

DTC Descriptors

DTC P0CE5: Hybrid/EV Battery Pack Coolant Control Valve Position Sensor Performance

DTC P0CE6: Hybrid/EV Battery Pack Coolant Control Valve Position Sensor Circuit Low Voltage

DTC P0CE7: Hybrid/EV Battery Pack Coolant Control Valve Position Sensor Circuit High Voltage

DTC P1F58: Hybrid/EV Battery Pack Coolant Control Valve Position Sensor Performance - Unexpected Position Change Detected

Circuit/System Description

The valve provides position feedback to the hybrid/EV powertrain control module 2 based on a potentiometer in the valve. The hybrid/EV powertrain control module 2 uses this feedback to monitor the valve position. Different valve positions correspond to different resistance values. The hybrid/EV powertrain control module 2 determines the resistance values corresponding to the end stop positions of the valve by moving the valve to an end-stop and back to its original position when the vehicle is first turned on. This is referred to as the hybrid/EV powertrain control module 2 “diagnostic learn” the valve. This provides a valve shaft breakage test and allows the hybrid/EV powertrain control module 2 to “learn” the position feedback value that corresponds to that end-stop. The end-stop that is used at each Vehicle in Service Mode alternates between each end, the radiator end one time, the chiller end the next time, the radiator end the next time, etc.

Conditions for Running the DTC

P0CE5

The hybrid/EV battery pack coolant control valve learn is not running or has completed.

P0CE6 and P0CE7

The 12 V battery voltage is greater than 10.2 V.

P1F58

- The hybrid/EV battery pack coolant control valve learn is not running or has completed.
- The hybrid/EV battery pack coolant control valve has not moved for greater than 15 s.

Conditions for Setting the DTC

P0CE5

Hybrid/EV Battery Pack Coolant Control Valve has not reached its commanded position in less than or equal to 22 s.

P0CE6

The feedback voltage is less than 28 % of the 5 V reference voltage.

P0CE7

The feedback voltage is greater than 72 % of the 5 V reference voltage.

P1F58

Hybrid/EV Battery Pack Coolant Control Valve feedback position is not within 3 % of valve commanded position.

Action Taken When the DTC Sets

- DTCs P0CE5, P0CE6, P0CE7, and P1F58 are type B DTCs.
- The Hybrid/EV Powertrain Control Module 2 uses only the two extreme positions of the valve, radiator and 100% chiller

Conditions for Clearing the DTC

- DTCs P0CE5, P0CE6, P0CE7, and P1F58 are type B DTCs.
- The *Hybrid/EV Battery Pack Coolant Control Valve Learn on page 9-343* will need to be performed.

Diagnostic Aids

- Verify that the wire harness connector does not have corrosion when diagnosing a DTC P0CE5, P0CE6, P0CE7, or P1F58.
- The *Hybrid/EV Battery Pack Coolant Control Valve Learn on page 9-343* will need to be performed.

Reference Information

Schematic Reference

Hybrid/EV Cooling Schematics on page 9-201

Connector End View Reference

Component Connector End Views on page 11-455

Description and Operation

Hybrid Cooling System Description and Operation on page 9-343

Electrical Information Reference

- *Circuit Testing on page 11-871*
- *Connector Repairs on page 11-895*
- *Testing for Intermittent Conditions and Poor Connections on page 11-877*
- *Wiring Repairs on page 11-883*

DTC Type Reference

Powertrain Diagnostic Trouble Code (DTC) Type Definitions on page 6-92

Scan Tool Reference

Control Module References on page 6-3 for scan tool information

Circuit/System Verification

1. Vehicle in Service Mode.
2. Verify that DTC P0CE5 or P1F58 is not set.

⇒ **If DTC P0CE5 or P1F58 is set**

Perform the *Hybrid/EV Battery Pack Coolant Control Valve Learn on page 9-343* procedure.

⇓ **If DTC P0CE5 or P1F58 is not set**

3. With a scan tool, command the Hybrid/EV Battery Pack Coolant Control Solenoid Valve Command between 10%–90%. Verify that the Hybrid/EV Battery Pack Coolant Control Solenoid Valve Feedback matches the command. There may be a 30 second delay between the command and valve response.

⇒ **The Hybrid/EV Battery Pack Coolant Control Solenoid Valve Feedback does not match the command**

Refer to Circuit/System Testing.

⇓ **The Hybrid/EV Battery Pack Coolant Control Solenoid Valve Feedback matches the command**

4. All OK.

Circuit/System Testing

1. Vehicle OFF, disconnect the harness connector at the Q65 Hybrid/EV Battery Pack Coolant Control Valve.
2. Test for less than 10 Ω between the low reference circuit terminal 5 and ground.

⇒ **If 10 Ω or greater**

2.1. Vehicle OFF, disconnect the X2 harness connector at the K114B Hybrid/EV Powertrain Control Module 2.

2.2. Test for less than 2 Ω in the low reference circuit end to end.

⇒ If 2 Ω or greater, repair the open/high resistance in the circuit.

⇒ If less than 2 Ω, replace the K114B Hybrid/EV Powertrain Control Module 2. After the repair, with a scan tool, perform the *Hybrid/EV Battery Pack Coolant Control Valve Learn on page 9-343* procedure.

⇓ **If less than 10 Ω**

3. Vehicle in Service Mode.
4. Test for 4.8–5.2 V between the 5 V reference circuit terminal 6 and ground.

⇒ **If less than 4.8 V**

4.1. Vehicle OFF, disconnect the X2 harness connector at the K114B Hybrid/EV Powertrain Control Module 2.

4.2. Test for infinite resistance between the 5 V reference circuit and ground.

⇒ If less than infinite resistance, repair the short to ground on the circuit.

⇓ If infinite resistance

4.3. Test for less than 2 Ω in the 5 V reference circuit end to end.

⇒ If 2 Ω or greater, repair the open/high resistance in the circuit.

⇒ If less than 2 Ω, replace the K114B Hybrid/EV Powertrain Control Module 2. After the repair, with a scan tool, perform the *Hybrid/EV Battery Pack Coolant Control Valve Learn on page 9-343* procedure.

⇒ **If greater than 5.2 V**

4.1. Vehicle OFF, disconnect the X2 harness connector at the K114B Hybrid/EV Powertrain Control Module 2. Vehicle in Service Mode.

4.2. Test for less than 1 V between the 5 V reference circuit and ground.

⇒ If 1 V or greater, repair the short to voltage on the circuit.

⇒ If less than 1 V, replace the K114B Hybrid/EV Powertrain Control Module 2. After the repair, with a scan tool, perform the *Hybrid/EV Battery Pack Coolant Control Valve Learn on page 9-343* procedure.

⇓ **If within the specified range**

5. Test for 4.8–5.2 V between the signal circuit terminal 4 and ground.

⇒ **If less than 4.8 V**

5.1. Vehicle OFF, disconnect the X2 harness connector at the K114B Hybrid/EV Powertrain Control Module 2.

5.2. Test for infinite resistance between the signal circuit and ground.

⇒ If less than infinite resistance, repair the short to ground on the circuit.

⇓ If infinite resistance

5.3. Test for less than 2 Ω in the signal circuit end to end.

⇒ If 2 Ω or greater, repair the open/high resistance in the circuit.

⇒ If less than 2 Ω, replace the K114B Hybrid/EV Powertrain Control Module 2. After the repair, with a scan tool, perform the *Hybrid/EV Battery Pack Coolant Control Valve Learn on page 9-343* procedure.

⇒ **If greater than 5.2 V**

5.1. Vehicle OFF, disconnect the X2 harness connector at the K114B Hybrid/EV Powertrain Control Module 2. Vehicle in Service Mode.

5.2. Test for less than 1 V between the signal circuit and ground.

⇒ If 1 V or greater, repair the short to voltage on the circuit.

⇒ If less than 1 V, replace the K114B Hybrid/EV Powertrain Control Module 2. After the repair, with a scan tool, perform the *Hybrid/EV Battery Pack Coolant Control Valve Learn on page 9-343*

⇓ **If within the specified range**

6. Replace the Q65 Hybrid/EV Battery Pack Coolant Control Valve.

Repair Instructions

Perform the *Diagnostic Repair Verification on page 6-123* after completing the repair.

- *Drive Motor Battery Coolant Flow Control Valve Replacement on page 9-318*
- *Control Module References on page 6-3* for hybrid/EV powertrain control module 2 replacement, programming and setup.

DTC P0CE9, P0CEA, P1F44, or P1F45

Diagnostic Instructions

- Perform the *Diagnostic System Check - Vehicle on page 6-91* prior to using this diagnostic procedure.
- Review *Strategy Based Diagnosis on page 6-83* for an overview of the diagnostic approach.
- *Diagnostic Procedure Instructions on page 6-84* provides an overview of each diagnostic category.

DTC Descriptors

DTC P0CE9: Hybrid/EV Electronics Coolant Pump Control Circuit
DTC P0CEA: Hybrid/EV Electronics Coolant Pump Performance
DTC P1F44: Hybrid/EV Electronics Coolant Pump Enable Circuit Low Voltage
DTC P1F45: Hybrid/EV Electronics Coolant Pump Enable Circuit High Voltage

Circuit/System Description

The hybrid/EV electronics coolant pump circulates coolant through the power electronics coolant radiator, hybrid/EV powertrain control module 1, and the battery charger to control the temperature of the hybrid/EV powertrain control module 1 and the battery charger. An enable signal from the hybrid/EV powertrain control module 2 to the hybrid/EV electronics coolant pump provides overall control of the pump. When this circuit is high, the pump can operate. The pump is controlled with a pulse-width modulated signal from the hybrid/EV powertrain control module 2 to the hybrid/EV electronics coolant pump. The higher the duty cycle the higher the pump speed. The hybrid/EV electronics coolant pump provides a hard-wired pulse-width modulated feedback signal to the hybrid/EV powertrain control module 2. During normal operation, this feedback signal provides pump speed information. The hybrid/EV electronics coolant pump has some self-diagnostic capability. If it determines there is an internal fault it provides this information on this same feedback circuit instead of pump speed information.

Conditions for Running the DTC

P0CE9

- The 12 V battery voltage is greater than 10.2 V.
- The hybrid/EV electronics coolant pump is enabled.
- The hybrid/EV electronics coolant pump is commanded between 5 % and 95 %.

P0CEA

- The 12 V battery voltage is greater than 10.2 V.
- The vehicle is in Charge Mode.
- The hybrid/EV electronics coolant pump is enabled for greater than 300 sec.
- The hybrid/EV electronics coolant speed is greater than 30 %.
- The outside air temperature status is valid for greater than 300 sec.
- None of the following DTCs are set: P0071, P0072, P0073, P0CE9, P0CF0, P0CF1, P1F44, P1F45, P1ED6, P1ED7, or P1ED8.

P1F44

- The 12 V battery voltage is greater than 10.2 V.
- The hybrid/EV electronics coolant pump is enabled.

P1F45

- The 12 V battery voltage is greater than 10.2 V.
- The Hybrid/EV Electronics Coolant Pump is disabled.

Conditions for Setting the DTC

P0CE9

The Hybrid/EV Powertrain Control Module 2 has detected an open, short to voltage or short to ground on the electronic coolant pump control circuit.

P0CEA

- The high voltage charger temperature is greater than 60° C (108° F) for greater than 5 sec.
- The hybrid/EV electronics coolant temperature sensor minus the high voltage charger temperature is greater than 60° C (108° F) for greater than 5 sec.

  OR
- The hybrid/EV electronics coolant temperature sensor minus the high voltage charger temperature is greater than the following measurements:
  - 15° C (27° F) at (–10)–50° C (14–122° F) ambient air temperatures.
  - 30° C (54° F) at –20° C (–4° F) ambient air temperature.
  - 40° C (72° F) at –40° C (–40° F) ambient air temperature.

  OR
- The hybrid/EV electronics coolant temperature sensor minus the high voltage charger temperature is greater than the following measurements:
  - 20° C (36° F) at 0–50° C (32–122° F) ambient air temperatures.
  - 25° C (45° F) at –10° C (14° F) ambient air temperature.

– 30° C (54° F) at –20° C (–4° F) ambient air temperature.
– 40° C (72° F) at –40° C (–40° F) ambient air temperature.

P1F44

The Hybrid/EV Powertrain Control Module 2 has detected an open, or short to voltage on the electronic coolant pump enable circuit.

P1F45

The Hybrid/EV Powertrain Control Module 2 has detected an open or short to voltage on the electronic coolant pump enable circuit.

Action Taken When the DTC Sets

DTCs P0CE9, P0CED P1F44, and P1F45 are a type B DTCs.

Conditions for Clearing the DTC

DTCs P0CE9, P0CED P1F44, and P1F45 are a type B DTCs.

Diagnostic Aids

DTC P0CED P1F44, and P1F45 may cause DTC P0CE9 to set.

Reference Information

Schematic Reference

Hybrid/EV Cooling Schematics on page 9-201

Connector End View Reference

Component Connector End Views on page 11-455

Description and Operation

Hybrid Cooling System Description and Operation on page 9-343

Electrical Information Reference

- *Circuit Testing on page 11-871*
- *Connector Repairs on page 11-895*
- *Testing for Intermittent Conditions and Poor Connections on page 11-877*
- *Wiring Repairs on page 11-883*

DTC Type Reference

Powertrain Diagnostic Trouble Code (DTC) Type Definitions on page 6-92

Scan Tool Reference

Control Module References on page 6-3 for scan tool information

Circuit/System Verification

1. Vehicle in Service Mode
2. Verify that DTC P0C43, P0C44, P0C45, P0C47, or P1EC6 is not set.

⇒ **If any of the DTCs are set**

Refer to *Diagnostic Trouble Code (DTC) List - Vehicle on page 6-92*

⇓ **If none of the DTCs are set**

3. Vehicle ON.
4. With a scan tool, verify that the Hybrid/EV Electronics Coolant Pump Command is between 20 %-90 % and Hybrid Electronics Coolant Pump Feedback is 50 % +/-5 %.

⇒ **The readings are not within the specified range**

Refer to Circuit/System Testing.

⇓ **The readings are within the specified range**

5. All OK.

Circuit/System Testing

1. Vehicle OFF, disconnect the harness connector at the G35 Hybrid/EV Electronics Coolant Pump.
2. Test for less than 10 Ω between the ground circuit terminal 4 and ground.

⇒ **If 10 Ω or greater**

Repair the open/high resistance on the ground circuit.

⇓ **If less than 10 Ω**

3. Vehicle in Service Mode.
4. Test for B+ between the B+ circuit terminal 5 and the ground circuit terminal 4.

⇒ **If less than B+**

4.1. Vehicle OFF, test for infinite resistance between the B+ circuit terminal 5 and ground.

⇒ If less than infinite resistance, repair the short to ground on the circuit.

⇓ If infinite resistance

4.2. Test for less than 2 Ω in the B+ circuit end to end.

⇒ If 2 Ω or greater, repair the open/high resistance in the circuit.

⇒ If less than 2 Ω and the fuse is blown, replace the G35 Hybrid/EV Electronics Coolant Pump.

⇓ **If B+**

5. Connect a test lamp between the enable circuit terminal 1 and the ground circuit terminal 4.
6. Command the Hybrid/EV Electronics Coolant Pump OFF (10 %) and ON (90 %) with a scan tool. The test lamp should turn OFF and ON when changing between the commanded states.

⇒ **If the test lamp is always illuminated at 10 %**

6.1. Vehicle OFF, disconnect the X2 harness connector at the K114B Hybrid/EV Powertrain Control Module 2. Vehicle in Service Mode.

6.2. Test for less than 1 V between the enable circuit terminal and ground.

⇒ If 1 V or greater, repair the short to voltage on the circuit.

⇒ If less than 1 V, replace the K114B Hybrid/EV Powertrain Control Module 2.

⇒ **If the test lamp does not illuminate at 90 %**

6.1. Vehicle OFF, disconnect the X2 harness connector at the K114B Hybrid/EV Powertrain Control Module 2.

6.2. Test for infinite resistance between the enable circuit and ground.

⇒ If less than infinite resistance, repair the short to ground on the circuit.

⇓ If infinite resistance

6.3. Test for less than 2 Ω in the pump enable circuit end to end.

⇒ If 2 Ω or greater, repair the open/high resistance in the circuit.

⇒ If less than 2 Ω, replace the K114B Hybrid/EV Powertrain Control Module 2.

⇓ **If the test lamp turns OFF and ON when changing between the commanded states**

7. Connect a test lamp between the control circuit terminal 3 and the B+ circuit terminal 5.
8. Command the Hybrid/EV Electronics Coolant Pump ON between 20 % and 90 % with a scan tool. Verify that a test lamp changes illumination between bright (20 %) and dim (90 %) between the control circuit terminal 3 and the B+ circuit terminal 5.

⇒ **If the test lamp is always dim or does not illuminate**

8.1. Vehicle OFF, disconnect the X2 harness connector at the K114B Hybrid/EV Powertrain Control Module 2. Vehicle in Service Mode.

8.2. Test for less than 1 V between the control circuit terminal and ground

⇒ If 1 V or greater, repair the short to voltage on the circuit.

⇓ If less than 1 V

8.3. Vehicle OFF.

8.4. Test for less than 2 Ω in the control circuit end to end.

⇒ If 2 Ω or greater, repair the open/high resistance in the circuit.

⇒ If less than 2 Ω, replace the K114B Hybrid/EV Powertrain Control Module 2.

⇒ **If the test lamp is always bright**

8.1. Vehicle OFF, disconnect the X2 harness connector at the K114B Hybrid/EV Powertrain Control Module 2.

8.2. Test for infinite resistance between the control circuit and ground.

⇒ If less than infinite resistance, repair the short to ground on the circuit.

⇒ If infinite resistance, replace the K114B Hybrid/EV Powertrain Control Module 2.

⇓ **The test lamp changes illumination between bright (20 %) and dim (90 %)**

9. Remove the test lamp.
10. Verify the scan tool, Hybrid/EV Electronics Coolant Pump Feedback parameter is less than 10 %.

⇒ **If greater than 10 %**

10.1. Vehicle OFF, disconnect the X2 harness connector at the K114B Hybrid/EV Powertrain Control Module 2.

10.2. Test for infinite resistance between the feedback circuit terminal 2 and ground.

⇒ If less than infinite resistance, repair the short to ground on the circuit.

⇒ If infinite resistance, replace the K114B Hybrid/EV Powertrain Control Module 2.

⇓ **If 10 %**

11. Install a 3 A fused jumper wire between the feedback circuit terminal 2 and the ground circuit terminal 4.
12. Verify the scan tool, Hybrid/EV Electronics Coolant Pump Feedback parameter is greater than 90 %.

⇒ **If less than 90 %**

12.1. Vehicle OFF, disconnect the X2 harness connector at the K114B Hybrid/EV Powertrain Control Module 2. Vehicle in Service Mode.

12.2. Test for less than 1 V between the feedback circuit terminal and ground.

⇒ If 1 V or greater, repair the short to voltage on the circuit.

⇓ If less than 1 V

12.3. Vehicle OFF.

12.4. Test for less than 2 Ω in the control circuit end to end.

⇒ If 2 Ω or greater, repair the open/high resistance in the circuit.

⇒ If less than 2 Ω, replace the K114B Hybrid/EV Powertrain Control Module 2.

⇓ **If 90 % or greater**

13. Replace the G35 Hybrid/EV Electronics Coolant Pump.

Repair Instructions

Perform the *Diagnostic Repair Verification on page 6-123* after completing the repair.

- *Drive Motor Generator Control Module Coolant Pump Replacement on page 9-291*
- *Control Module References on page 6-3* for hybrid/EV powertrain control module 2 replacement, programming and setup.

DTC P0CEF-P0CF1

Diagnostic Instructions

- Perform the *Diagnostic System Check - Vehicle on page 6-91* prior to using this diagnostic procedure.
- Review *Strategy Based Diagnosis on page 6-83* for an overview of the diagnostic approach.
- *Diagnostic Procedure Instructions on page 6-84* provides an overview of each diagnostic category.

DTC Descriptors

DTC P0CEF: Hybrid/EV Electronics Coolant Temperature Sensor Performance

DTC P0CF0: Hybrid/EV Electronics Coolant Temperature Sensor Circuit Low Voltage

DTC P0CF1: Hybrid/EV Electronics Coolant Temperature Sensor Circuit High Voltage

Circuit/System Description

The hybrid/EV electronics has a coolant temperature sensor. The hybrid/EV electronics coolant temperature sensor is located in the coolant radiator. The temperature sensor is a variable resistor that measures the temperature of the hybrid/EV electronics coolant. The hybrid/EV electronics coolant temperature sensor resistance changes with battery coolant temperature. The lower the temperature, the higher the resistance of the sensor. The higher the temperature, the lower the resistance of the sensor. The Hybrid/EV Powertrain Control Module 2 uses the hybrid/EV electronics coolant temperature sensor to determine the hybrid/EV electronics temperature to control the hybrid/EV electronics cooling operation.

Conditions for Running the DTC

P0CEF

- The 12 V battery voltage is greater than or equal to 10.2 V.
- The hybrid/EV electronics coolant pump is enabled for greater than 300 sec.
- The high voltage charger temperature is greater than –40° C (–40° F).
- None of the following DTCs are set; P0CE9, P0CF0, P0CF1, P1ED6, P1ED7, P1ED8, P1F44, or P1F45.

P0CF0 and P0CF1

The 12 V battery voltage is greater than or equal to 10.2 V.

Conditions for Setting the DTC

P0CEF

- The hybrid/EV electronics coolant temperature sensor minus the high voltage charger temperature is greater than 40° C (104° F).

P0CF0

The hybrid/EV electronics coolant temperature is less than 0.1 V of the reference voltage.

P0CF1

The hybrid/EV electronics temperature is greater than 4.9 V of the reference voltage.

Action Taken When the DTC Sets

DTC P0CEF-P0CF1 are type B DTCs.

Conditions for Clearing the DTC

DTC P0CEF-P0CF1 are type B DTCs.

Diagnostic Aids

- Low or no coolant in the system may set a DTC P0CF0.
- An inoperative Hybrid/EV Electronics Coolant Pump may set a DTC P0CEF.

Reference Information

Schematic Reference

Hybrid/EV Cooling Schematics on page 9-201

Connector End View Reference

Component Connector End Views on page 11-455

Description and Operation

Hybrid Cooling System Description and Operation on page 9-343

Electrical Information Reference

- *Circuit Testing on page 11-871*
- *Connector Repairs on page 11-895*
- *Testing for Intermittent Conditions and Poor Connections on page 11-877*
- *Wiring Repairs on page 11-883*

DTC Type Reference

Powertrain Diagnostic Trouble Code (DTC) Type Definitions on page 6-92

Scan Tool Reference

Control Module References on page 6-3 for scan tool information

Circuit/System Verification

1. Vehicle in Service Mode.
2. Verify that DTC P0CE9 or P0CED is not set.

⇒ **If DTCs are set**

Refer to *Diagnostic Trouble Code (DTC) List - Vehicle on page 6-92*

⇓ **If no DTC is set**

3. Observe the scan tool Hybrid/EV Powertrain Control Module 2 Hybrid Electronics Coolant Temperature parameter. The readings should be between -39 and +85°C (-38.2 and +185°F).

⇒ **The readings are not within the specified range**

Refer to Circuit/System Testing

⇓ **The readings are within the specified range**

4. All OK.

Circuit/System Testing

1. Vehicle OFF, disconnect the harness connector at the B202 Hybrid/EV Electronics Coolant Temperature Sensor.
2. Test for less than 10 Ω between the low reference circuit terminal 2 and ground.

⇒ **If 10 Ω or greater**

2.1. Disconnect the K114B Hybrid/EV Powertrain Control Module 2.

2.2. Test for less than 2 Ω in the low reference circuit end to end.

⇒ If 2 Ω or greater, repair the open/high resistance in the circuit.

⇒ If less than 2 Ω, replace the K114B Hybrid/EV Powertrain Control Module 2.

⇓ **If less than 10 Ω**

3. Vehicle in Service Mode.
4. Verify the scan tool Hybrid Electronics Coolant Temperature is less than -35 °C (-38.2 °F).

⇒ **If -35 °C (-38.2 °F) or greater**

4.1. Vehicle OFF, disconnect the harness connector at the K114B Hybrid/EV Powertrain Control Module 2.

4.2. Test for infinite resistance between the signal circuit and ground.

⇒ If less than infinite resistance, repair the short to ground on the circuit.

⇒ If infinite resistance, replace the K114B Hybrid/EV Powertrain Control Module 2.

⇓ **If less than -35 °C (-38.2 °F)**

5. Install a 3 A fused jumper wire between the signal circuit terminal 1 and the low reference circuit terminal 2. Verify the scan tool Hybrid Electronics Coolant Temperature parameter is greater than 80° C (176° F).

⇒ **If less than 80° C (176° F)**

5.1. Vehicle OFF, disconnect the harness connector at the K114B Hybrid/EV Powertrain Control Module 2. Vehicle in Service Mode.

5.2. Test for less than 1 V between the control circuit and ground

⇒ If 1 V or greater, repair the short to voltage on the circuit.

⇓ If less than 1 V

5.3. Test for less than 2 Ω in the control circuit end to end.

⇒ If 2 Ω or greater, repair the open/high resistance in the circuit.

⇒ If less than 2 Ω, replace the K114B Hybrid/EV Powertrain Control Module 2.

⇓ **If 80° C (176° F) or greater**

6. Test or replace the B202 Hybrid/EV Electronics Coolant Temperature Sensor.

Component Testing

1. Vehicle OFF, disconnect the harness connector at the B202 Hybrid/EV Electronics Coolant Temperature Sensor.
2. Test for 2.2–3.0k Ω at approximately 21.11°C (70° F) between the signal terminal and the low reference terminal.

⇒ **If not within the specified range**

Replace the B202 Hybrid/EV Electronics Coolant Temperature Sensor.

⇓ **If within the specified range**

3. All OK.

Repair Instructions

Perform the *Diagnostic Repair Verification on page 6-123* after completing the repair.

- *Engine Coolant Temperature Sensor Replacement - Radiator Side on page 9-285*
- *Control Module References on page 6-3* for hybrid/EV powertrain control module 2 replacement, programming and setup.

DTC P148A-P148C

Diagnostic Instructions

- Perform the *Diagnostic System Check - Vehicle on page 6-91* prior to using this diagnostic procedure.
- Review *Strategy Based Diagnosis on page 6-83* for an overview of the diagnostic approach.
- *Diagnostic Procedure Instructions on page 6-84* provides an overview of each diagnostic category.

DTC Descriptors

DTC P148A: Cooling Fan Signal Circuit Performance
DTC P148B: Cooling Fan Signal Circuit Low Voltage
DTC P148C: Cooling Fan Signal Circuit High Voltage

Circuit/System Description

The Hybrid/EV Powertrain Control Module 2 controls the radiator cooling fans. The cooling fans are controlled with a pulse width modulated (PWM) signal. The Hybrid/EV Powertrain Control Module 2 diagnoses any faults with the hardwire circuit to the engine control module. The engine control module sends a fan request PWM signal to the Hybrid/EV Powertrain Control Module 2 through a hardwire circuit. The Hybrid/EV Powertrain Control Module 2 operates in a pass-through mode for the engine control module fan request. The higher the duty cycle the higher the cooling fan speed.

The Hybrid/EV Powertrain Control Module 2 sends a request to the engine control module for the cooling fans to be turned on. The engine control module uses this request and other vehicle inputs to decide if and what speed the cooling fans should operate. The engine control module sends the cooling fan command to the Hybrid/EV Powertrain Control Module 2. The Hybrid/EV Powertrain Control Module 2 sends the signal to the cooling fans to operate and at what speed.

If the vehicle is in Charge Mode and the Hybrid/EV Powertrain Control Module 2 requests the cooling fans to operate, if the engine control module is not awake, the Hybrid/EV Powertrain Control Module 2 will control the cooling fans. If active cooling is needed, the engine control module wakes up to operate the air conditioning control module and then the engine control module is the master controller for the fans.

Conditions for Running the DTC

P148A

- The 12 V battery voltage is greater than 10.2 V.
- Vehicle ON for more than 10 sec.
- The cooling fans are enabled for more than 10 seconds.
- The current cooling fan speed minus the previous cooling fan speed is greater than 5 %.
- None of the following DTCs are set: P148B, P148C, or U0293.

  OR

- The 12 V battery voltage is greater than or equal to 10.2 V.
- Vehicle OFF.
- The energy storage system thermal condition request is ActiveCool.
- The cooling fans are enabled for more than 10 seconds.
- None of the following DTCs are set: P148B, P148C, or U0293.

P148B

The 12 V battery voltage is greater than 10.2 V.

P148C

- The 12 V battery voltage is greater than 10.2 V.
- Vehicle ON for more than 10 sec.

  OR

- The 12 V battery voltage is greater than or equal to 10.2 V.
- Vehicle OFF.
- The energy storage system thermal condition request is ActiveCool.
- The cooling fans are enabled for more than 10 seconds.

Conditions for Setting the DTC

P148A

- The PWM fan duty cycle request from Engine Control Module (Hardwire) minus engine cooling fan speed via serial data is greater than 30%.

  OR

- The PWM fan duty cycle time from Engine Control Module (Hardwire) minus 7.8125 is greater than 0.15625.

P148B

The Hybrid/EV Powertrain Control Module 2 has detected a duty cycle of less than 3% from the engine control module.

P148C

The Hybrid/EV Powertrain Control Module 2 has detected a duty cycle of greater than 97% from the engine control module.

Action Taken When the DTC Sets

DTCs P148A, P148B and P148C are type B DTCs.

Conditions for Clearing the DTC

DTCs P148A, P148B and P148C are type B DTCs.

Reference Information

Schematic Reference

Hybrid/EV Cooling Schematics on page 9-201

Connector End View Reference

Component Connector End Views on page 11-455

Description and Operation

Hybrid Cooling System Description and Operation on page 9-343

Electrical Information Reference

- *Circuit Testing on page 11-871*
- *Connector Repairs on page 11-895*
- *Testing for Intermittent Conditions and Poor Connections on page 11-877*
- *Wiring Repairs on page 11-883*

DTC Type Reference

Powertrain Diagnostic Trouble Code (DTC) Type Definitions on page 6-92

Scan Tool Reference

Control Module References on page 6-3 for scan tool information

Circuit/System Verification

1. Vehicle in Service Mode.
2. Command the Cooling Fan Motor Command to 90% with a scan tool. Verify that the cooling fan is operating.

⇒ **The cooling fan is not operating**

Refer to Circuit/System Testing

⇓ **The cooling fan is operating**

3. All OK.

Circuit/System Testing

1. Vehicle OFF, disconnect the X1 harness connector at the K20 Engine Control Module. Vehicle in Service Mode.
2. Test for 4.8–5.2 V between the signal circuit terminal 41 and ground.

⇒ **If less than 4.8 V**

2.1. Vehicle OFF, disconnect the X2 harness connector at the K114B Hybrid/EV Powertrain Control Module 2.

2.2. Test for infinite resistance between the signal circuit and ground.

⇒ If less than infinite resistance, repair the short to ground on the circuit.

2.3. Test for less than 2 Ω in the signal circuit end to end.

⇒ If 2 Ω or greater, repair the open/high resistance in the circuit.

⇒ If less than 2 Ω, replace the K114B Hybrid/EV Powertrain Control Module 2.

⇒ **If greater than 5.2 V**

2.1. Vehicle OFF, disconnect the X2 harness connector at the K114B Hybrid/EV Powertrain Control Module 2. Vehicle in Service Mode.

2.2. Test for less than 1 V between the signal circuit and ground.

⇒ If 1 V or greater, repair the short to voltage on the circuit.

⇒ If less than 1 V, replace the K114B Hybrid/EV Powertrain Control Module 2.

⇓ **If within the specified range**

3. Replace the K20 Engine Control Module.

Repair Instructions

Perform the *Diagnostic Repair Verification on page 6-123* after completing the repair.

Control Module References on page 6-3 for engine control module, hybrid/EV powertrain control module 2 replacement, programming and setup.

DTC P1EC6

Diagnostic Instructions

- Perform the *Diagnostic System Check - Vehicle on page 6-91* prior to using this diagnostic procedure.
- Review *Strategy Based Diagnosis on page 6-83* for an overview of the diagnostic approach.
- *Diagnostic Procedure Instructions on page 6-84* provides an overview of each diagnostic category.

DTC Descriptor

DTC P1EC6: Hybrid/EV Battery Pack Heater Performance

Circuit/System Description

The hybrid/EV battery contains 6 high voltage contactors and 1 module. The high voltage contactors and transistor allow the high voltage DC batteries to be connected to the vehicle or safely contain the high voltage DC within the hybrid/EV battery assembly. The 6 high voltage contactors consist of a main positive high voltage contactor, main negative high voltage contactor, charge positive high voltage contactor, charge negative high voltage contactor, multi-function high voltage contactor and precharge contactor. The 1 module is the heater module or heater control module. The contactors and module close and open in a specific sequence controlled by the hybrid/EV powertrain control module 2. The hybrid/EV powertrain control module 2 supplies voltage to the control circuit for the high voltage contactors/module. Ground is provided through the case ground and chassis.

The Hybrid/EV Battery Pack Coolant Heater is mounted to the coolant inlet. They Hybrid/EV Battery Pack Coolant Heater uses a 360 V power source.

After the vehicle is turned ON, the Hybrid/EV Battery Pack Coolant Heater is commanded ON. The Hybrid/EV Powertrain Control Module 2 monitors the temperature change at the Hybrid/EV Battery Pack coolant temperature sensor 1 to determine if the Hybrid/EV Battery Pack Coolant Heater is functioning properly.

Conditions for Running the DTC

- The 12 V battery voltage is greater than or equal to 10.2 V.
- The vehicle is ON or in charge mode.
- Runs once per ignition cycle when vehicle ON.
- The hybrid/EV battery pack coolant temperature sensor 1 is less than 50°C (122°F).
- The charge mode is not in active heat only.
- The active heat is requested.
- The multifunction contactor is CLOSED.
- The inlet temperature sensor, outlet temperature sensor, and minimum cell temperature is greater than −20°C (−4°F).
- The battery pack coolant valve moves to the radiator position for 15 sec then to the bypass position for 66 sec.
- The hybrid/EV battery pack coolant pump is commanded on to 90 % for 81 sec.
- None of the following DTCs are set; P0C43, P0C44, P0C45, P0CE2, P0CE3, P1EC3, P0CE5, P0CE6, P0CE7, P1EC5, P1EC7, P1EC8, P1F56, P1F58, P1FFB, P1FFC, P1FFD, or P1FFE.

Conditions for Setting the DTC

The Hybrid/EV Powertrain Control Module 2 did not see the Hybrid/EV Battery Pack Coolant Temperature Sensor 1 rise fast enough during the test period of 161 sec. The required increase in temperature is 0.15°C (0.27°F) change every second.

Action Taken When the DTC Sets

- DTC P1EC6 is a type B DTC.
- The Hybrid/EV Battery Pack Coolant Heater will be disabled.

Conditions for Clearing the DTC

DTC P1EC6 is a type B DTC.

Diagnostic Aids

- P1EC6 will prevent battery heating and the vehicle will be unable to start in cold weather with battery temperatures below −25°C (−13°F).
- A malfunctioning pack heater may have discoloration of the metal housing or the metal housing may be deformed.

Reference Information

Schematic Reference

- *Hybrid/EV Cooling Schematics on page 9-201*
- *Hybrid/EV Energy Storage Schematics on page 9-348*

Connector End View Reference

Component Connector End Views on page 11-455

Description and Operation

Hybrid Cooling System Description and Operation on page 9-343

Electrical Information Reference

- *Circuit Testing on page 11-871*
- *Connector Repairs on page 11-895*

- *Testing for Intermittent Conditions and Poor Connections on page 11-877*
- *Wiring Repairs on page 11-883*

DTC Type Reference

Powertrain Diagnostic Trouble Code (DTC) Type Definitions on page 6-92

Scan Tool Reference

Control Module References on page 6-3 for scan tool information

Special Tools

- *EL-48900* HEV Safety Kit
- *EL-50772* Insulation Multimeter

For equivalent regional tools, refer to *Special Tools on page 9-344*.

Circuit/System Verification

1. Vehicle in Service Mode.
2. Verify that DTC P0AA1, P0AD9, P0ADD, P0AE2, P0AE4, P0AFA, P0C43, P0C44, P0C45, P0C47, P0D0A, P0D11, P0D22, P1E8C, P1E8D, P1EBC-P1EBF, P1EC0, P1EC3, P1EC5, P1F18, or P1FFB-P1FFE is not set.

⇒ **If any DTC is set**

Refer to *Diagnostic Trouble Code (DTC) List - Vehicle on page 6-92*.

⇓ **If none of the DTCs are set**

3. Vehicle OFF. Remove the F8UA fuse to the G37 Hybrid/EV Battery Pack Coolant Pump. Set the vehicle Charge Mode to IMMEDIATE. Connect the charge cord set. With the vehicle in Charge Mode, Vehicle in Service Mode.
4. Verify the scan tool Hybrid/EV Battery Pack Coolant Temperature Sensor 1 parameter increases 5–10° C (9–18° F) within 120 s when command the hybrid/EV battery pack coolant heater ON with a scan tool.

⇒ **If the Hybrid/EV Battery Pack Coolant Temperature Sensor 1 did not increase 5–10° C (9–18° F) within 120 s**

Refer to Circuit/System Testing.

⇓ **If the Hybrid/EV Battery Pack Coolant Temperature Sensor 1 did increase 5–10° C (9–18° F) within 120 s**

5. All OK.

Circuit/System Testing

Danger: Always perform the High Voltage Disabling procedure prior to servicing any High Voltage component or connection. Personal Protection Equipment (PPE) and proper procedures must be followed.

The High Voltage Disabling procedure includes the following steps:

- ***Identify how to disable high voltage.***
- ***Identify how to test for the presence of high voltage.***
- ***Identify condition under which high voltage is always present and personal protection equipment (PPE) and proper procedures must be followed.***

Before working on any high voltage system, be sure to wear the following Personal Protection Equipment:

- ***Safety glasses with appropriate side shields when within 15 meters (50 feet) of the vehicle, either indoors or outdoors.***
- ***Certified and up-to-date Class "0" Insulation gloves rated at 1000V with leather protectors.***
  - ***Visually and functionally inspect the gloves before use.***
  - ***Wear the Insulation gloves with leather protectors at all times when working with the high voltage battery assembly, whether the system is energized or not.***

Failure to follow the procedures may result in serious injury or death.

Note: The Battery Pack will utilize an exchange program. Please consult the most recent revision of bulletin/PI #PIP5112, available in Service Information (SI), for a list of approved Battery Pack service procedures. Components that may be removed and serviced without exchanging the complete battery pack are identified in the bulletin/PI. Please contact the GM Technical Assistance Center if you have any questions.

1. Vehicle OFF, disable the high voltage. Refer to *High Voltage Disabling on page 9-363*. Remove the Drive Motor Battery Cover. Refer to *Drive Motor Battery Cover Replacement on page 9-449*. Disconnect the harness connector at the E54 Hybrid/EV Battery Pack Coolant Heater.
2. Test for 61–75 Ω between terminal A and terminal B at the E54 Hybrid/EV Battery Pack Coolant Heater.

⇒ **If not within the specified range**

Verify that the Hybrid/EV Battery Pack Coolant Heater maxi–fuse is not blown. Replace the Hybrid/EV Battery Pack Coolant Heater maxi-fuse if it is blown and the E54 Hybrid/EV Battery Pack Coolant Heater.

⇓ **If within the specified range**

Note: The following continuity tests must be performed using an *EL-50772* Insulation Multimeter. Select the Isolation test setting, then select the 500 V range.

3. With the *EL-50772* , set on the Isolation test setting, test for 550M Ω between the E54 Hybrid/EV Battery Pack Coolant Heater terminals listed below and battery tray ground:
   - Terminal A
   - Terminal B

⇒ **If less than the specified value**

Verify that the Hybrid/EV Battery Pack Coolant Heater maxi-fuse is not blown. Replace the Hybrid/EV Battery Pack Coolant Heater maxi-fuse if it is blown and the E54 Hybrid/EV Battery Pack Coolant Heater.

⇓ **If within the specified value**

4. Replace the A28 Hybrid/EV Battery Contactor Assembly.

Repair Instructions

Perform the *Diagnostic Repair Verification on page 6-123* after completing the repair.

- Hybrid/EV Battery Pack Coolant Heater maxi-fuse replacement
- *Battery Heater Replacement on page 9-306*
- *Drive Motor Battery Positive High Voltage Contactor Relay Replacement on page 9-499*

DTC P1FFB-P1FFE

Diagnostic Instructions

- Perform the *Diagnostic System Check - Vehicle on page 6-91* prior to using this diagnostic procedure.
- Review *Strategy Based Diagnosis on page 6-83* for an overview of the diagnostic approach.
- *Diagnostic Procedure Instructions on page 6-84* provides an overview of each diagnostic category.

DTC Descriptors

DTC P1FFB: Hybrid/EV Battery Pack Coolant Level Sensor Circuit
DTC P1FFC: Hybrid/EV Battery Pack Coolant Level Sensor Circuit Low Voltage
DTC P1FFD: Hybrid/EV Battery Pack Coolant Level Sensor Circuit High Voltage
DTC P1FFE: Hybrid/EV Battery Pack Coolant Level Low

Circuit/System Description

The hybrid/EV battery pack has a coolant level sensor. The hybrid/EV battery pack coolant level sensor is attached to the coolant surge tank. The level sensor is a 2 state switch which changes state when the level of the hybrid/EV battery pack coolant in the surge tank reaches approximately 100mL. The hybrid/EV powertrain control module 2 supplies 5 V to the signal circuit and a ground for the low reference circuit. The hybrid/EV battery pack coolant level sensor resistance changes states when the battery coolant level in the surge tank gets low. The low level state is the lower resistance state of the sensor. The normal level state is the higher resistance state of the sensor. The hybrid/EV powertrain control module 2 uses the hybrid/EV battery pack coolant level sensor to determine if disabling the hybrid/EV battery pack charging operation is necessary due to a loss of coolant.

Conditions for Running the DTC

P1FFB, P1FFC, and P1FFD

The 12 V battery voltage is greater than or equal to 10.2 V.

P1FFE

- Vehicle is OFF for more than 30 seconds.
- The vehicle speed is less than 1 kph (0.62 mph) for more than 30 seconds.
- The Hybrid/EV Battery Pack Coolant Temperature Sensor 2 is greater than −7°C (19.4°F)
- Once DTC is set the DTC will not run again until a clear code command is sent.

Conditions for Setting the DTC

P1FFB

The Hybrid/EV Battery Pack Coolant Level Sensor voltage is between 2.8 V – 3.1 V

P1FFC

The Hybrid/EV Battery Pack Coolant Level Sensor voltage is below 1.4 V

P1FFD

The Hybrid/EV Battery Pack Coolant Level Sensor voltage is above 4.0 V

P1FFE

The Hybrid/EV Battery Pack Coolant Level Sensor voltage is between 1.4 V – 2.8 V for more than 2 consecutive key cycles

Action Taken When the DTC Sets

- DTC P1FFB, P1FFC, P1FFD, and P1FFE are type A DTCs.
- The driver information center (DIC) displays the SERVICE HIGH VOLTAGE CHARGING SYSTEM message.
- Hybrid/EV Battery Pack charging will be disabled.

Conditions for Clearing the DTC

- DTC P1FFB, P1FFC, P1FFD, and P1FFE are type A DTCs.
- DTC P1FFE will only clear with a clear code command.

Diagnostic Aids

- Parking the vehicle on a steep incline may set DTC P1FFE.
- Having an incorrect / mismatched calibration without the Hybrid/EV Battery Pack Coolant Level Sensor update performed may set DTC P1FFB, P1FFC, P1FFD, P1FFE, or P1FFF.
- DTC P1FFE will not clear or go to history with ignition cycles once DTC is set. DTC P1FFE will only clear with a clear code command.

Reference Information

Schematic Reference

Hybrid/EV Cooling Schematics on page 9-201

Connector End View Reference

Component Connector End Views on page 11-455

Description and Operation

Hybrid Cooling System Description and Operation on page 9-343

Electrical Information Reference

- *Circuit Testing on page 11-871*
- *Connector Repairs on page 11-895*

- *Testing for Intermittent Conditions and Poor Connections on page 11-877*
- *Wiring Repairs on page 11-883*

DTC Type Reference

Powertrain Diagnostic Trouble Code (DTC) Type Definitions on page 6-92

Scan Tool Reference

Control Module References on page 6-3 for scan tool information

Circuit/System Verification

1. Verify that the vehicle hybrid/EV battery cooling system is full.

⇒ **If the hybrid/EV battery cooling system is low**

Refer to Hybrid Cooling System Loss of Coolant (Battery), *Hybrid Cooling System Loss of Coolant (Drive Motor Battery Cooling System) on page 9-253* or *Hybrid Cooling System Loss of Coolant (Drive Motor Generator Power Inverter Module Cooling System) on page 9-254*

⇒ **The hybrid/EV battery cooling system is full**

Refer to Circuit/System Testing.

Circuit/System Testing

1. Vehicle OFF, disconnect the harness connector at the B258 Hybrid/EV Battery Coolant Level Sensor.
2. Test for less than 10 Ω between the low reference circuit terminal B and ground.

⇒ **If 10 Ω or greater**

2.1. Vehicle OFF, disconnect the X2 harness connector at the K114B Hybrid/EV Powertrain Control Module 2.

2.2. Test for less than 2 Ω in the low reference circuit end to end.

⇒ If 2 Ω or greater, repair the open/high resistance in the circuit.

⇒ If less than 2 Ω, replace the K114B Hybrid/EV Powertrain Control Module 2.

⇓ **If less than 10 Ω**

3. Vehicle in Service Mode.
4. Test for 4.8–5.2 V between the 5 V signal circuit terminal A and ground.

⇒ **If 5.2 V or greater**

4.1. Vehicle OFF, disconnect the X2 harness connector at the K114B Hybrid/EV Powertrain Control Module 2. Vehicle in Service Mode.

4.2. Test for less than 1 V between the signal circuit and ground

⇒ If 1 V or greater, repair the short to voltage on the circuit.

⇒ If less than 1 V, replace the K114B Hybrid/EV Powertrain Control Module 2.

⇒ **If 4.8 V or less**

4.1. Vehicle OFF, disconnect the X2 harness connector at the K114B Hybrid/EV Powertrain Control Module 2.

4.2. Test for infinite resistance between the signal circuit and ground.

⇒ If less than infinite resistance, repair the short to ground on the circuit.

⇓ If infinite resistance

4.3. Test for less than 2 Ω in the signal circuit end to end.

⇒ If 2 Ω or greater, repair the open/high resistance in the circuit.

⇒ If less than 2 Ω, replace the K114B Hybrid/EV Powertrain Control Module 2.

⇓ **If within the specified range**

5. Vehicle OFF, remove the B258 Hybrid/EV Battery Coolant Level Sensor from the coolant surge tank
6. Test for 24–25.4k Ω between the signal terminal A and the low reference terminal B.

⇒ **If not within the specified range**

Replace the B258 Hybrid/EV Battery Coolant Level Sensor.

⇓ **If within the specified range**

Note: Moving the magnet slightly along the bottom of the sensor will assist closing the internal switch.

7. Using a magnet, place the magnet off center of the sensor, opposite of the terminals on the epoxy side, test for 7.1–7.54k Ω between the signal terminal A and the low reference terminal B.

⇒ **If not within the specified range**

Replace the B258 Hybrid/EV Battery Coolant Level Sensor.

⇓ **If within the specified range**

8. Replace the coolant surge tank.

Repair Instructions

Perform the *Diagnostic Repair Verification on page 6-123* after completing the repair.

- *Drive Motor Battery Coolant Level Sensor Replacement on page 9-274*
- *Radiator Surge Tank Replacement (Reserve Energy Supply System Reservoir) on page 9-276* or *Radiator Surge Tank Replacement (Power Energy Reservoir) on page 9-277* or *Radiator Surge Tank Replacement (Heater Reservoir) on page 9-278*
- *Control Module References on page 6-3* for hybrid/EV powertrain control module 2 replacement, programming and setup.

DTC P1FFF

Diagnostic Instructions

- Perform the *Diagnostic System Check - Vehicle on page 6-91* prior to using this diagnostic procedure.
- Review *Strategy Based Diagnosis on page 6-83* for an overview of the diagnostic approach.
- *Diagnostic Procedure Instructions on page 6-84* provides an overview of each diagnostic category.

DTC Descriptor

DTC P1FFF: System Isolation / Coolant Level Sensor Fault - Hybrid/EV Battery Charging System Disabled

Circuit/System Description

The hybrid/EV powertrain control module 2 monitors the hybrid/EV battery pack coolant level sensor and the isolation sense circuits to control the hybrid/EV battery pack charging operation. When a fault is detected in either system, this DTC sets to prevent hybrid/EV battery pack charging.

Conditions for Running the DTC

None of the following DTCs are set: P0721, P077B, P0A9C, P0A9D, P0A9E, P0AC6, P0AC7, P0AC8, P0ACB, P0ACC, P0ACD, P0AE9, P0AEA, P0AEB, P0BC3, P0BC4, P0BC5, P0C34, P0C35, P0C36, P0C7D, P0C7E, P0C7F, P0C82, P0C83, P0C84, P0C89, P0C8A, P0C8B, P0C8E, P0C8F, P0C90, P0C93, P0C94, P0C95, P0C98, P0C99, P0C9A, P0CA9, P0CAA, P0CAB, P0CAE, P0CAF, P0CB0, P0CB3, P0CB4, P0CB5, P0CB8, P0CB9, P0CBA, P0CD6, P0CD7, P0CD8, P1E8E, P1E8F, P1E90, P1E91, P1E93, P1E94, P1E95, P1E96, P1E97, P1E99, P1E9A, P1E9B, P1E9C, P1E9D, P1E9F, P1EA0, P1EA1, P1EA2, P1EA3, P1EA5, P1EB1, P1EB2, P1EB3, P1EB4, P1EB5, P215C, U0100, U0101, U185A, U2401, U2603, U2604, U2605, U2606. or P2610.

Conditions for Setting the DTC

DTC P0AA6, P1AE6, P0DAA, P1FFB, P1FFC, P1FFD, P1FFE, or P302F is set.

Action Taken When the DTC Sets

- DTC P1FFF is a type A DTC.
- The driver information center displays the SERVICE HIGH VOLTAGE CHARGING SYSTEM message.
- Hybrid/EV battery pack charging will be disabled.

Conditions for Clearing the DTC

- DTC P1FFF is a type A DTC.
- DTC P1FFF will only clear with a clear code command.

Diagnostic Aids

DTC P1FFF will not clear or go to history with ignition cycles once DTC is set. DTC P1FFF will only clear with a clear code command from the scan tool.

Reference Information

Schematic Reference

Hybrid/EV Cooling Schematics on page 9-201

Connector End View Reference

Component Connector End Views on page 11-455

Description and Operation

Drive Motor Battery System Description on page 9-545

Electrical Information Reference

- *Circuit Testing on page 11-871*
- *Connector Repairs on page 11-895*
- *Testing for Intermittent Conditions and Poor Connections on page 11-877*
- *Wiring Repairs on page 11-883*

DTC Type Reference

Powertrain Diagnostic Trouble Code (DTC) Type Definitions on page 6-92

Scan Tool Reference

Control Module References on page 6-3 for scan tool information

Circuit/System Verification

1. Vehicle in Service Mode.
2. Verify DTC P0AA6, P1AE6, P0DAA, or P1F0E is not set.

⇒ **If DTC P0AA6, P1AE6, P0DAA, or P1F0E is set**

Refer to *DTC P0AA6, P0DAA, P1AE6, or P1F0E on page 9-392*.

⇓ **If DTC P0AA6, P1AE6, P0DAA, or P1F0E is not set**

3. Verify DTC P302F is not set.

⇒ If DTC P302F is set

Refer to *DTC P302F on page 9-627*.

⇓ If DTC P302F is not set

4. Verify DTC P1FFB, P1FFC, P1FFD, or P1FFE is not set.

⇒ **If DTC P1FFB, P1FFC, P1FFD, or P1FFE is set**

Refer to *DTC P1FFB-P1FFE on page 9-238*.

⇓ **If DTC P1FFB, P1FFC, P1FFD, or P1FFE is not set**

5. Verify that the vehicle hybrid/EV battery cooling system is full.

⇒ **If the hybrid/EV battery cooling system is low**

Refer to Drive Motor Battery Cooling System in *Hybrid Cooling System Loss of Coolant (Drive Motor Battery Cooling System) on page 9-253* or *Hybrid Cooling System Loss of Coolant (Drive Motor Generator Power Inverter Module Cooling System) on page 9-254*.

⇓ **The hybrid/EV battery cooling system is full**

Note: If DTC P1FFF will not clear, the K114B Hybrid/EV Powertrain Control Module 2 may have to be programmed even if the module contains the current calibration level.

6. Clear DTCs.
7. Verify DTC P1FFF is not set.

⇒ **If DTC P1FFF is set**

7.1. Program the K114B Hybrid/EV Powertrain Control Module 2. Refer to *Hybrid Powertrain Control Module 2 Programming and Setup on page 6-12*.

7.2. Verify DTC P1FFF is not set.

⇒ If DTC P1FFF is set and no other DTCs are set, replace the K114B Hybrid/EV Powertrain Control Module 2.

⇒ If DTC P1FFF is set and other DTCs are set, refer to *Diagnostic Trouble Code (DTC) List - Vehicle on page 6-92*.

⇓ If DTC P1FFF is not set.

7.3. All OK.

⇓ **If DTC P1FFF is not set**

8. All OK.

Repair Instructions

Perform the *Diagnostic Repair Verification on page 6-123* after completing the repair.

Control Module References on page 6-3 for hybrid/EV powertrain control module 2 replacement, programming, and setup.

Hybrid/EV Electronics Cooling Diagnostic

Step	Action	Yes	No
1	Were you sent here from Symptoms or another diagnostic table?	Go to *Step 2*	Go to *Diagnostic System Check - Vehicle on page 6-91*
2	***Warning: Refer to Moving Parts and Hot Surfaces Warning on page 0-5.*** ***Warning: Wear safety glasses in order to avoid eye damage.*** 1. Add coolant to the coolant surge tank as needed. Refer to *Drive Motor Generator Power Inverter Module Cooling System Draining and Filling on page 9-264*. 2. Using GDS, turn on the hybrid electronics coolant pump and increase the RPM to 1000. 3. Quickly remove and install the electric differential drive motor power inverter module cooling hose from the drive motor generator power inverter module. Refer to *Electric Differential Drive Motor Power Inverter Module Cooling Hose Replacement (PE TPIM to LTR) on page 9-270*. Is there coolant flowing out of the drive motor generator power inverter module?	Go to *Step 12*	Go to *Step 3*
3	Quickly remove and install the generator control module coolant hose from the drive motor generator power inverter module. Refer to *Generator Control Module Coolant Hose Replacement (PE From APM TO TPIM) on page 9-298*. Is there coolant flowing out of the generator control module coolant hose?	Go to *Step 14*	Go to *Step 4*
4	Quickly remove and install the generator control module coolant hose from the accessory DC power control module. Refer to *Generator Control Module Coolant Hose Replacement (PE From APM TO TPIM) on page 9-298*. Is there coolant flowing out of the accessory DC power control module?	Go to *Step 16*	Go to *Step 5*

Hybrid/EV Electronics Cooling Diagnostic (cont'd)

Step	Action	Yes	No
5	Quickly remove and install the drive motor generator control module cooling outlet hose from the accessory DC power control module. Refer to *Drive Motor Generator Control Module Cooling Outlet Hose Replacement (Auxiliary Radiator to Drive Motor Battery Charger) on page 9-292* or *Drive Motor Generator Control Module Cooling Outlet Hose Replacement (Long Hose) on page 9-293* or *Drive Motor Generator Control Module Cooling Outlet Hose Replacement (Two Bending) on page 9-294* or *Drive Motor Generator Control Module Cooling Outlet Hose Replacement (Straight Hose) on page 9-296*. Is there coolant flowing out of the drive motor generator control module cooling outlet hose?	Go to *Step 17*	Go to *Step 6*
6	Quickly remove and install the drive motor generator control module cooling outlet hose from the drive motor battery charger. Refer to *Drive Motor Generator Control Module Cooling Outlet Hose Replacement (Auxiliary Radiator to Drive Motor Battery Charger) on page 9-292* or *Drive Motor Generator Control Module Cooling Outlet Hose Replacement (Long Hose) on page 9-293* or *Drive Motor Generator Control Module Cooling Outlet Hose Replacement (Two Bending) on page 9-294* or *Drive Motor Generator Control Module Cooling Outlet Hose Replacement (Straight Hose) on page 9-296*. Is there coolant flowing out of the drive motor battery charger?	Go to *Step 19*	Go to *Step 7*
7	Quickly remove and install the drive motor generator control module cooling outlet hose from the drive motor battery charger. Refer to *Drive Motor Generator Control Module Cooling Outlet Hose Replacement (Auxiliary Radiator to Drive Motor Battery Charger) on page 9-292* or *Drive Motor Generator Control Module Cooling Outlet Hose Replacement (Long Hose) on page 9-293* or *Drive Motor Generator Control Module Cooling Outlet Hose Replacement (Two Bending) on page 9-294* or *Drive Motor Generator Control Module Cooling Outlet Hose Replacement (Straight Hose) on page 9-296*. Is there coolant flowing out of the drive motor generator control module cooling outlet hose?	Go to *Step 20*	Go to *Step 8*
8	Quickly remove and install the drive motor generator control module cooling outlet hose from the drive motor battery coolant radiator. Refer to *Drive Motor Generator Control Module Cooling Outlet Hose Replacement (Auxiliary Radiator to Drive Motor Battery Charger) on page 9-292* or *Drive Motor Generator Control Module Cooling Outlet Hose Replacement (Long Hose) on page 9-293* or *Drive Motor Generator Control Module Cooling Outlet Hose Replacement (Two Bending) on page 9-294* or *Drive Motor Generator Control Module Cooling Outlet Hose Replacement (Straight Hose) on page 9-296*. Is there coolant flowing out of the drive motor battery coolant radiator?	Go to *Step 22*	Go to *Step 9*
9	Quickly remove and install the drive motor generator control module radiator inlet hose from the drive motor battery coolant radiator. Refer to *Drive Motor Generator Control Module Radiator Inlet Hose Replacement (PE From LTR to A/Separator) on page 9-297*. Is there coolant flowing out of the drive motor generator control module radiator inlet hose?	Go to *Step 23*	Go to *Step 10*
10	Quickly remove and install the drive motor generator control module radiator inlet hose from the generator control module coolant pump. Refer to *Drive Motor Generator Control Module Radiator Inlet Hose Replacement (PE From LTR to A/Separator) on page 9-297*. Is there coolant flowing out of the generator control module coolant pump?	Go to *Step 24*	Go to *Step 11*
11	Replace the generator control module coolant pump. Refer to *Drive Motor Generator Control Module Coolant Pump Replacement on page 9-291*. Is the repair complete?	Go to *Step 25*	Go to *Step 1*

Hybrid/EV Electronics Cooling Diagnostic (cont'd)

Step	Action	Yes	No
12	Inspect for kinks or obstructions in the electric differential drive motor power inverter module cooling hose or the drive motor generator power inverter module cooling outlet hose. Refer to *Electric Differential Drive Motor Power Inverter Module Cooling Hose Replacement (PE TPIM to LTR) on page 9-270* or *Drive Motor Generator Power Inverter Module Cooling Outlet Hose Replacement (PE From A/Separator To Water Pump) on page 9-268*. Is there a kink or obstruction?	Go to *Step 13*	Go to *Step 1*
13	Replace the electric differential drive motor power inverter module cooling hose or the drive motor generator power inverter module cooling outlet hose. Refer to *Electric Differential Drive Motor Power Inverter Module Cooling Hose Replacement (PE TPIM to LTR) on page 9-270* or *Drive Motor Generator Power Inverter Module Cooling Outlet Hose Replacement (PE From A/Separator To Water Pump) on page 9-268*. Is the repair complete?	Go to *Step 25*	Go to *Step 1*
14	1. Using GDS, turn off the hybrid electronics coolant pump. 2. Remove the generator control module coolant hose from the drive motor generator power inverter module. Refer to *Generator Control Module Coolant Hose Replacement (PE From APM TO TPIM) on page 9-298*. 3. Remove the electric differential drive motor power inverter module cooling hose from the drive motor generator power inverter module. Refer to *Electric Differential Drive Motor Power Inverter Module Cooling Hose Replacement (PE TPIM to LTR) on page 9-270*. 4. Back flush the drive motor generator power inverter module cooling passages. 5. Install the generator control module coolant hose. Refer to *Generator Control Module Coolant Hose Replacement (PE From APM TO TPIM) on page 9-298*. 6. Install the electric differential drive motor power inverter module cooling hose. Refer to *Electric Differential Drive Motor Power Inverter Module Cooling Hose Replacement (PE TPIM to LTR) on page 9-270*. 7. Using GDS, turn on the hybrid electronics coolant pump and increase the RPM to 1000. 8. Quickly remove and install the electric differential drive motor power inverter module cooling hose from the drive motor generator power inverter module. Refer to *Electric Differential Drive Motor Power Inverter Module Cooling Hose Replacement (PE TPIM to LTR) on page 9-270*. Is there coolant flowing out of the drive motor generator power inverter module?	Go to *Step 25*	Go to *Step 15*
15	Replace the drive motor generator power inverter module. Refer to *Drive Motor Generator Power Inverter Module Replacement on page 9-184*. Is the repair complete?	Go to *Step 25*	Go to *Step 1*
16	Replace the generator control module coolant hose. Refer to *Generator Control Module Coolant Hose Replacement (PE From APM TO TPIM) on page 9-298*. Is the repair complete?	Go to *Step 25*	Go to *Step 1*

Hybrid/EV Electronics Cooling Diagnostic (cont'd)

Step	Action	Yes	No
17	1. Using GDS, turn off the hybrid electronics coolant pump. 2. Remove the drive motor generator control module cooling outlet hose from the accessory DC power control module. Refer to *Drive Motor Generator Control Module Cooling Outlet Hose Replacement (Auxiliary Radiator to Drive Motor Battery Charger) on page 9-292* or *Drive Motor Generator Control Module Cooling Outlet Hose Replacement (Long Hose) on page 9-293* or *Drive Motor Generator Control Module Cooling Outlet Hose Replacement (Two Bending) on page 9-294* or *Drive Motor Generator Control Module Cooling Outlet Hose Replacement (Straight Hose) on page 9-296*. 3. Remove the generator control module coolant hose from the accessory DC power control module. Refer to *Generator Control Module Coolant Hose Replacement (PE From APM TO TPIM) on page 9-298*. 4. Back flush the accessory DC power control module cooling passages. 5. Install the drive motor generator control module cooling outlet hose. Refer to *Drive Motor Generator Control Module Cooling Outlet Hose Replacement (Auxiliary Radiator to Drive Motor Battery Charger) on page 9-292* or *Drive Motor Generator Control Module Cooling Outlet Hose Replacement (Long Hose) on page 9-293* or *Drive Motor Generator Control Module Cooling Outlet Hose Replacement (Two Bending) on page 9-294* or *Drive Motor Generator Control Module Cooling Outlet Hose Replacement (Straight Hose) on page 9-296*. 6. Install the generator control module coolant hose. Refer to *Generator Control Module Coolant Hose Replacement (PE From APM TO TPIM) on page 9-298*. 7. Using GDS, turn on the hybrid electronics coolant pump and increase the RPM to 1000. 8. Quickly remove and install the generator control module coolant hose from the accessory DC power control module. Refer to *Generator Control Module Coolant Hose Replacement (PE From APM TO TPIM) on page 9-298*. Is there coolant flowing out of the accessory DC power control module?	Go to *Step 25*	Go to *Step 18*
18	Replace the accessory DC power control module. Refer to *Accessory DC Power Control Module Replacement on page 9-189*. Is the repair complete?	Go to *Step 25*	Go to *Step 1*
19	Replace the drive motor generator control module cooling outlet hose. Refer to *Drive Motor Generator Control Module Cooling Outlet Hose Replacement (Auxiliary Radiator to Drive Motor Battery Charger) on page 9-292* or *Drive Motor Generator Control Module Cooling Outlet Hose Replacement (Long Hose) on page 9-293* or *Drive Motor Generator Control Module Cooling Outlet Hose Replacement (Two Bending) on page 9-294* or *Drive Motor Generator Control Module Cooling Outlet Hose Replacement (Straight Hose) on page 9-296*. Is the repair complete?	Go to *Step 25*	Go to *Step 1*

Hybrid/EV Electronics Cooling Diagnostic (cont'd)

Step	Action	Yes	No
20	1. Using GDS, turn off the hybrid electronics coolant pump. 2. Remove the drive motor generator control module cooling outlet hose from the drive motor battery charger. Refer to *Drive Motor Generator Control Module Cooling Outlet Hose Replacement (Auxiliary Radiator to Drive Motor Battery Charger) on page 9-292* or *Drive Motor Generator Control Module Cooling Outlet Hose Replacement (Long Hose) on page 9-293* or *Drive Motor Generator Control Module Cooling Outlet Hose Replacement (Two Bending) on page 9-294* or *Drive Motor Generator Control Module Cooling Outlet Hose Replacement (Straight Hose) on page 9-296*. 3. Remove the drive motor generator control module cooling outlet hose from the drive motor battery charger. Refer to *Drive Motor Generator Control Module Cooling Outlet Hose Replacement (Auxiliary Radiator to Drive Motor Battery Charger) on page 9-292* or *Drive Motor Generator Control Module Cooling Outlet Hose Replacement (Long Hose) on page 9-293* or *Drive Motor Generator Control Module Cooling Outlet Hose Replacement (Two Bending) on page 9-294* or *Drive Motor Generator Control Module Cooling Outlet Hose Replacement (Straight Hose) on page 9-296*. 4. Back flush the drive motor battery charger cooling passages. 5. Install the drive motor generator control module cooling outlet hose. Refer to *Drive Motor Generator Control Module Cooling Outlet Hose Replacement (Auxiliary Radiator to Drive Motor Battery Charger) on page 9-292* or *Drive Motor Generator Control Module Cooling Outlet Hose Replacement (Long Hose) on page 9-293* or *Drive Motor Generator Control Module Cooling Outlet Hose Replacement (Two Bending) on page 9-294* or *Drive Motor Generator Control Module Cooling Outlet Hose Replacement (Straight Hose) on page 9-296*. 6. Install the drive motor generator control module cooling outlet hose. Refer to *Drive Motor Generator Control Module Cooling Outlet Hose Replacement (Auxiliary Radiator to Drive Motor Battery Charger) on page 9-292* or *Drive Motor Generator Control Module Cooling Outlet Hose Replacement (Long Hose) on page 9-293* or *Drive Motor Generator Control Module Cooling Outlet Hose Replacement (Two Bending) on page 9-294* or *Drive Motor Generator Control Module Cooling Outlet Hose Replacement (Straight Hose) on page 9-296*. 7. Using GDS, turn on the hybrid electronics coolant pump and increase the RPM to 1000. 8. Quickly remove and install the drive motor generator control module cooling outlet hose from the drive motor battery charger. Refer to *Drive Motor Generator Control Module Cooling Outlet Hose Replacement (Auxiliary Radiator to Drive Motor Battery Charger) on page 9-292* or *Drive Motor Generator Control Module Cooling Outlet Hose Replacement (Long Hose) on page 9-293* or *Drive Motor Generator Control Module Cooling Outlet Hose Replacement (Two Bending) on page 9-294* or *Drive Motor Generator Control Module Cooling Outlet Hose Replacement (Straight Hose) on page 9-296*. Is there coolant flowing out of the drive motor generator control module cooling outlet hose?	Go to *Step 25*	Go to *Step 21*
21	Replace the drive motor battery charger. Refer to *Drive Motor Battery Charger Replacement on page 9-649*. Is the repair complete?	Go to *Step 25*	Go to *Step 1*
22	Replace the drive motor generator control module cooling outlet hose. Refer to *Drive Motor Generator Control Module Cooling Outlet Hose Replacement (Auxiliary Radiator to Drive Motor Battery Charger) on page 9-292* or *Drive Motor Generator Control Module Cooling Outlet Hose Replacement (Long Hose) on page 9-293* or *Drive Motor Generator Control Module Cooling Outlet Hose Replacement (Two Bending) on page 9-294* or *Drive Motor Generator Control Module Cooling Outlet Hose Replacement (Straight Hose) on page 9-296*. Is the repair complete?	Go to *Step 25*	Go to *Step 1*

Hybrid/EV Electronics Cooling Diagnostic (cont'd)

Step	Action	Yes	No
23	Replace the drive motor battery coolant radiator. Refer to *Drive Motor Battery Coolant Radiator Replacement on page 9-312*. Is the repair complete?	Go to *Step 25*	Go to *Step 1*
24	Replace the generator control module coolant radiator hose. Refer to *Drive Motor Generator Control Module Radiator Inlet Hose Replacement (PE From LTR to A/Separator) on page 9-297*. Is the repair complete?	Go to *Step 25*	Go to *Step 1*
25	1. Add coolant to the coolant surge tank as needed. Refer to *Drive Motor Generator Power Inverter Module Cooling System Draining and Filling on page 9-264*. 2. Operate the system in order to verify the repair. Did you find and correct the condition?	System OK	Go to *Step 1*

Hybrid/EV Battery Pack Coolant Pump Malfunction

Diagnostic Instructions

- Perform the *Diagnostic System Check - Vehicle on page 6-91* prior to using this diagnostic procedure.
- Review *Strategy Based Diagnosis on page 6-83* for an overview of the diagnostic approach.
- *Diagnostic Procedure Instructions on page 6-84* provides an overview of each diagnostic category.

Circuit/System Description

The hybrid/EV battery pack coolant pump circulates coolant through the drive motor battery coolant radiator, drive motor battery coolant cooler, and the hybrid/EV battery pack to control the temperature of the hybrid/EV battery pack. An enable signal from the hybrid/EV powertrain control module 2 to the hybrid/EV battery pack coolant pump provides overall control of the pump. When this circuit is high, the pump can operate. The pump is controlled with a pulse-width modulated signal from the hybrid/EV powertrain control module 2 to the hybrid/EV battery pack coolant pump. The higher the duty cycle the higher the pump speed. The hybrid/EV battery pack coolant pump provides a hard-wired pulse-width modulated feedback signal to the hybrid/EV powertrain control module 2. During normal operation, this feedback signal provides pump speed information to the hybrid/EV powertrain control module 2. The hybrid/EV battery pack coolant pump has some self-diagnostic capability. If the hybrid/EV battery pack coolant pump determines there is an internal fault it provides this information on this same feedback circuit instead of pump speed information.

Diagnostic Aids

A malfuntioning coolant pump may cause a battery pack overheat condition.

Reference Information

Schematic Reference

Hybrid/EV Cooling Schematics on page 9-201

Connector End View Reference

Component Connector End Views on page 11-455

Description and Operation

Hybrid Cooling System Description and Operation on page 9-343

Electrical Information Reference

- *Circuit Testing on page 11-871*
- *Connector Repairs on page 11-895*
- *Testing for Intermittent Conditions and Poor Connections on page 11-877*
- *Wiring Repairs on page 11-883*

DTC Type Reference

Powertrain Diagnostic Trouble Code (DTC) Type Definitions on page 6-92

Scan Tool Reference

Control Module References on page 6-3 for scan tool information

Circuit/System Verification

1. Vehicle in Service Mode.
2. Verify that DTC P0C43, P0C44, P0C45, P0CE0, P0CE2, P0CE3, P0D0A, P0D11, P1EBC, P1EC3, P1EC4, P1EC5, P1EC6, P1EC7, P1EC8, U0111, U185B, or U2602 is not set.

⇒ **If any of the DTCs are set**

Refer to *Diagnostic Trouble Code (DTC) List - Vehicle on page 6-92*

⇓ **If none of the DTCs are set**

3. With the Hybrid/Ev Battery Pack Coolant Pump disabled and not running, verify the scan tool parameters listed below:
   - Hybrid/EV Battery Pack Coolant Pump Command is less than 10%.
   - Hybrid/EV Battery Pack Coolant Pump Feedback is 0%.
   - Hybrid/EV Battery Pack Coolant Pump Speed is 25 RPM.

⇒ **The scan tool parameters listed are not the specified values**

Refer to Circuit/System Testing.

⇓ **The scan tool parameters listed are within the specified values**

4. Set the vehicle Charge Mode to IMMEDIATE.
5. Vehicle OFF, connect the charge cord set.
6. With the vehicle charging, the hybrid/EV battery pack coolant pump enabled and not running, verify the scan tool parameters listed below:
   - Hybrid/EV Battery Pack Coolant Pump Command is 10%.
   - Hybrid/EV Battery Pack Coolant Pump Feedback to be 50% +/-5%.
   - Hybrid/EV Battery Pack Coolant Pump Speed is 50 RPM.

⇒ **The scan tool parameters listed are not the specified values**

Refer to Circuit/System Testing.

⇓ **The scan tool parameters listed are within the specified values**

7. Command the Hybrid/EV Battery Pack Coolant Pump to 90%, verify the scan tool parameters listed below:
   - Hybrid/EV Battery Pack Coolant Pump Command to be greater than 10%.
   - Hybrid/EV Battery Pack Coolant Pump Feedback to be 50% +/-5%.
   - Hybrid/EV Battery Pack Coolant Pump Speed is greater than 50 RPM.

⇒ **The scan tool parameters listed are not the specified values**

Refer to Circuit/System Testing.

⇓ **The scan tool parameters listed are within the specified values**

8. All OK.

Circuit/System Testing

1. Vehicle OFF, disconnect the harness connector at the G37 Hybrid/EV Battery Pack Coolant Pump.
2. Test for less than 10 Ω between the ground circuit terminal 4 and ground.

⇒ **If 10 Ω or greater**

Repair the open/high resistance on the ground circuit.

⇓ **If less than 10 Ω**

3. Vehicle in Service Mode.
4. Test for greater than 11.5 V between the B+ circuit terminal 5 and the ground circuit terminal 4.

⇒ **If 11.5 V or less**

4.1. Vehicle OFF, test for infinite resistance between the B+ circuit terminal 5 and ground.

⇒ If less than infinite resistance, repair the short to ground on the circuit.

⇓ If infinite resistance

4.2. Test for less than 2 Ω in the B+ circuit end to end.

⇒ If 2 Ω or greater, repair the open/high resistance in the circuit.

⇒ If less than 2 Ω and the fuse is blown, replace the G37 Hybrid/EV Battery Pack Coolant Pump.

⇓ **If greater than 11.5 V**

5. Connect a test lamp between the enable circuit terminal 1 and the ground circuit terminal 4.
6. Command the Hybrid Battery Pack Coolant Pump Command OFF (10 %) and ON (90 %) with a scan tool. The test lamp should turn OFF and ON when changing between the commanded states.

⇒ **If the test lamp is always illuminated at 10 %**

6.1. Vehicle OFF, disconnect the X2 harness connector at the K114B Hybrid/EV Powertrain Control Module 2. Vehicle in Service Mode.

6.2. Test for less than 1 V between the enable circuit terminal and ground.

⇒ If 1 V or greater, repair the short to voltage on the circuit.

⇒ If less than 1 V, replace the K114B Hybrid/EV Powertrain Control Module 2.

⇒ **If the test lamp does not illuminate at 90 %**

6.1. Vehicle OFF, disconnect the X2 harness connector at the K114B Hybrid/EV Powertrain Control Module 2.

6.2. Test for infinite resistance between the enable circuit and ground.

⇒ If less than infinite resistance, repair the short to ground on the circuit.

⇓ If infinite resistance

6.3. Test for less than 2 Ω in the enable circuit end to end.

⇒ If 2 Ω or greater, repair the open/high resistance in the circuit.

⇒ If less than 2 Ω, replace the K114B Hybrid/EV Powertrain Control Module 2.

⇓ **If the test lamp turns OFF and ON when changing between the commanded states**

7. Connect a test lamp between the control circuit terminal 3 and the B+ circuit terminal 5.
8. Command the Hybrid Battery Pack Coolant Pump Command ON between 20 % and 90 % with a scan tool. Verify that a test lamp changes illumination between bright (20 %) and dim (90 %) between the control circuit terminal 3 and the B+ circuit terminal 5.

⇒ **If the test lamp is always dim or does not illuminate**

8.1. Vehicle OFF, disconnect the X2 harness connector at the K114B Hybrid/EV Powertrain Control Module 2. Vehicle in Service Mode.

8.2. Test for less than 1 V between the control circuit terminal and ground

⇒ If 1 V or greater, repair the short to voltage on the circuit.

⇓ If less than 1 V

8.3. Vehicle OFF.

8.4. Test for less than 2 Ω in the control circuit end to end.

⇒ If 2 Ω or greater, repair the open/high resistance in the circuit.

⇒ If less than 2 Ω, replace the K114B Hybrid/EV Powertrain Control Module 2.

⇒ **If the test lamp is always bright**

8.1. Vehicle OFF, disconnect the X2 harness connector at the K114B Hybrid/EV Powertrain Control Module 2.

8.2. Test for infinite resistance between the control circuit and ground.

⇒ If less than infinite resistance, repair the short to ground on the circuit.

⇓ If infinite resistance

8.3. Test for less than 2 Ω in the control circuit end to end.

⇒ If 2 Ω or greater, repair the open/high resistance in the circuit.

⇒ If less than 2 Ω, replace the K114B Hybrid/EV Powertrain Control Module 2.

⇓ **The test lamp changes illumination between bright (20 %) and dim (90 %)**

9. Command the Hybrid Battery Pack Coolant Pump Command OFF.
10. Verify the scan tool, Hybrid Battery Pack Coolant Pump Feedback parameter is less than 10 %.

⇒ **If 10 % or greater**

10.1. Vehicle OFF, disconnect the X2 harness connector at the K114B Hybrid/EV Powertrain Control Module 2.

10.2. Test for infinite resistance between the feedback circuit terminal 2 and ground.

⇒ If less than infinite resistance, repair the short to ground on the circuit.

⇒ If infinite resistance, replace the K114B Hybrid/EV Powertrain Control Module 2.

⇓ **If less than 10 %**

11. Install a 3 A fused jumper wire between the feedback circuit terminal 2 and the ground circuit terminal 4.
12. Verify the scan tool, Hybrid Battery Pack Coolant Pump Feedback parameter is greater than 90 %.

⇒ **If less than 90 %**

12.1. Vehicle OFF, disconnect the X2 harness connector at the K114B Hybrid/EV Powertrain Control Module 2.

12.2. Test for less than 1 V between the feedback circuit terminal and ground.

⇒ If 1 V or greater, repair the short to voltage on the circuit.

⇓ If less than 1 V

12.3. Test for less than 2 Ω in the control circuit end to end.

⇒ If 2 Ω or greater, repair the open/high resistance in the circuit.

⇒ If less than 2 Ω, replace the K114B Hybrid/EV Powertrain Control Module 2.

⇓ **If 90 % or greater**

13. Replace the G37 Hybrid/EV Battery Pack Coolant Pump.

Repair Instructions

Perform the *Diagnostic Repair Verification on page 6-123* after completing the repair.

- *Drive Motor Battery Coolant Pump Replacement on page 9-315*
- *Control Module References on page 6-3* for hybrid/EV powertrain control module 2 replacement, programming and setup.

Hybrid/EV Electronics Coolant Pump Malfunction

Diagnostic Instructions

- Perform the *Diagnostic System Check - Vehicle on page 6-91* prior to using this diagnostic procedure.
- Review *Strategy Based Diagnosis on page 6-83* for an overview of the diagnostic approach.
- *Diagnostic Procedure Instructions on page 6-84* provides an overview of each diagnostic category.

Circuit/System Description

The hybrid/EV electronics coolant pump circulates coolant through the power electronics coolant radiator, hybrid/EV powertrain control module 1, and the battery charger to control the temperature of the hybrid/EV powertrain control module 1 and the battery charger. An enable signal from the hybrid/EV powertrain control module 2 to the hybrid/EV electronics coolant pump provides overall control of the pump. When this circuit is high, the pump can operate. The pump is controlled with a pulse-width modulated signal from the hybrid/EV powertrain control module 2 to the hybrid/EV electronics coolant pump. The higher the duty cycle the higher the pump speed. The hybrid/EV electronics coolant pump provides a hard-wired pulse-width modulated feedback signal to the hybrid/EV powertrain control module 2. During normal operation, this feedback signal provides pump speed information. The hybrid/EV electronics coolant pump has some self-diagnostic capability. If it determines there is an internal fault it provides this information on this same feedback circuit instead of pump speed information.

Diagnostic Aids

A malfuntioning coolant pump may cause an electronics overheat condition.

Reference Information

Schematic Reference

Hybrid/EV Cooling Schematics on page 9-201

Connector End View Reference

Component Connector End Views on page 11-455

Description and Operation

Hybrid Cooling System Description and Operation on page 9-343

Electrical Information Reference

- *Circuit Testing on page 11-871*
- *Connector Repairs on page 11-895*

- *Testing for Intermittent Conditions and Poor Connections on page 11-877*
- *Wiring Repairs on page 11-883*

DTC Type Reference

Powertrain Diagnostic Trouble Code (DTC) Type Definitions on page 6-92

Scan Tool Reference

Control Module References on page 6-3 for scan tool information

Circuit/System Verification

1. Vehicle in Service Mode
2. Verify that DTC P0C43, P0C44, P0C45, P0C47, or P1EC6 is not set.

⇒ **If any of the DTCs are set**

Refer to *Diagnostic Trouble Code (DTC) List - Vehicle on page 6-92*

⇓ **If none of the DTCs are set**

3. Vehicle ON.
4. With a scan tool, verify that the Hybrid/EV Electronics Coolant Pump Command is between 20 %-90 % and Hybrid Electronics Coolant Pump Feedback is 50 % +/-5 %.

⇒ **The readings are not within the specified range**

Refer to Circuit/System Testing.

⇓ **The readings are within the specified range**

5. All OK.

Circuit/System Testing

1. Vehicle OFF, disconnect the harness connector at the G35 Hybrid/EV Electronics Coolant Pump.
2. Test for less than 10 Ω between the ground circuit terminal 4 and ground.

⇒ **If 10 Ω or greater**

Repair the open/high resistance on the ground circuit.

⇓ **If less than 10 Ω**

3. Vehicle in Service Mode.
4. Test for B+ between the B+ circuit terminal 5 and the ground circuit terminal 4.

⇒ **If less than B+**

4.1. Vehicle OFF, test for infinite resistance between the B+ circuit terminal 5 and ground.

⇒ If less than infinite resistance, repair the short to ground on the circuit.

⇓ If infinite resistance

4.2. Test for less than 2 Ω in the B+ circuit end to end.

⇒ If 2 Ω or greater, repair the open/high resistance in the circuit.

⇒ If less than 2 Ω and the fuse is blown, replace the G35 Hybrid/EV Electronics Coolant Pump.

⇓ **If B+**

5. Connect a test lamp between the enable circuit terminal 1 and the ground circuit terminal 4.
6. Command the Hybrid/EV Electronics Coolant Pump OFF (10 %) and ON (90 %) with a scan tool. The test lamp should turn OFF and ON when changing between the commanded states.

⇒ **If the test lamp is always illuminated at 10 %**

6.1. Vehicle OFF, disconnect the X2 harness connector at the K114B Hybrid/EV Powertrain Control Module 2. Vehicle in Service Mode.

6.2. Test for less than 1 V between the enable circuit terminal and ground.

⇒ If 1 V or greater, repair the short to voltage on the circuit.

⇒ If less than 1 V, replace the K114B Hybrid/EV Powertrain Control Module 2.

⇒ **If the test lamp does not illuminate at 90 %**

6.1. Vehicle OFF, disconnect the X2 harness connector at the K114B Hybrid/EV Powertrain Control Module 2.

6.2. Test for infinite resistance between the enable circuit and ground.

⇒ If less than infinite resistance, repair the short to ground on the circuit.

⇓ If infinite resistance

6.3. Test for less than 2 Ω in the pump enable circuit end to end.

⇒ If 2 Ω or greater, repair the open/high resistance in the circuit.

⇒ If less than 2 Ω, replace the K114B Hybrid/EV Powertrain Control Module 2.

⇓ **If the test lamp turns OFF and ON when changing between the commanded states**

7. Connect a test lamp between the control circuit terminal 3 and the B+ circuit terminal 5.
8. Command the Hybrid/EV Electronics Coolant Pump ON between 20 % and 90 % with a scan tool. Verify that a test lamp changes illumination between bright (20 %) and dim (90 %) between the control circuit terminal 3 and the B+ circuit terminal 5.

⇒ **If the test lamp is always dim or does not illuminate**

8.1. Vehicle OFF, disconnect the X2 harness connector at the K114B Hybrid/EV Powertrain Control Module 2. Vehicle in Service Mode.

8.2. Test for less than 1 V between the control circuit terminal and ground

⇒ If 1 V or greater, repair the short to voltage on the circuit.

⇓ If less than 1 V

8.3. Vehicle OFF.

8.4. Test for less than 2 Ω in the control circuit end to end.

⇒ If 2 Ω or greater, repair the open/high resistance in the circuit.

⇒ If less than 2 Ω, replace the K114B Hybrid/EV Powertrain Control Module 2.

⇒ **If the test lamp is always bright**

8.1. Vehicle OFF, disconnect the X2 harness connector at the K114B Hybrid/EV Powertrain Control Module 2.

8.2. Test for infinite resistance between the control circuit and ground.

⇒ If less than infinite resistance, repair the short to ground on the circuit.

⇒ If infinite resistance, replace the K114B Hybrid/EV Powertrain Control Module 2.

⇓ **The test lamp changes illumination between bright (20 %) and dim (90 %)**

9. Remove the test lamp.
10. Verify the scan tool, Hybrid/EV Electronics Coolant Pump Feedback parameter is less than 10 %.

⇒ **If greater than 10 %**

10.1. Vehicle OFF, disconnect the X2 harness connector at the K114B Hybrid/EV Powertrain Control Module 2.

10.2. Test for infinite resistance between the feedback circuit terminal 2 and ground.

⇒ If less than infinite resistance, repair the short to ground on the circuit.

⇒ If infinite resistance, replace the K114B Hybrid/EV Powertrain Control Module 2.

⇓ **If 10 %**

11. Install a 3 A fused jumper wire between the feedback circuit terminal 2 and the ground circuit terminal 4.
12. Verify the scan tool, Hybrid/EV Electronics Coolant Pump Feedback parameter is greater than 90 %.

⇒ **If less than 90 %**

12.1. Vehicle OFF, disconnect the X2 harness connector at the K114B Hybrid/EV Powertrain Control Module 2. Vehicle in Service Mode.

12.2. Test for less than 1 V between the feedback circuit terminal and ground.

⇒ If 1 V or greater, repair the short to voltage on the circuit.

⇓ If less than 1 V

12.3. Vehicle OFF.

12.4. Test for less than 2 Ω in the control circuit end to end.

⇒ If 2 Ω or greater, repair the open/high resistance in the circuit.

⇒ If less than 2 Ω, replace the K114B Hybrid/EV Powertrain Control Module 2.

⇓ **If 90 % or greater**

13. Replace the G35 Hybrid/EV Electronics Coolant Pump.

Repair Instructions

Perform the *Diagnostic Repair Verification on page 6-123* after completing the repair.

- *Drive Motor Generator Control Module Coolant Pump Replacement on page 9-291*
- *Control Module References on page 6-3* for hybrid/EV powertrain control module 2 replacement, programming and setup.

Cooling Fan Malfunction

Diagnostic Instructions

- Perform the *Diagnostic System Check - Vehicle on page 6-91* prior to using this diagnostic procedure.
- Review *Strategy Based Diagnosis on page 6-83* for an overview of the diagnostic approach.
- *Diagnostic Procedure Instructions on page 6-84* provides an overview of each diagnostic category.

Circuit/System Description

The Hybrid/EV Powertrain Control Module 2 controls the radiator cooling fan. The cooling fan are controlled with a pulse width modulated signal. The Hybrid/EV Powertrain Control Module 2 diagnoses any faults with the hardwire circuit to the engine control module. The engine control module sends a fan request pulse width modulated signal to the Hybrid/EV Powertrain Control Module 2 through a hardwire circuit. The Hybrid/EV Powertrain Control Module 2 operates in a pass-through mode for the engine control module fan request. The higher the duty cycle the higher the cooling fan speed.

The Hybrid/EV Powertrain Control Module 2 sends a request to the engine control module for the cooling fan to be enabled. The engine control module uses this request and other vehicle inputs to decide if and what speed the cooling fan should operate. The engine control module sends the cooling fan command to the hybrid/EV powertrain control module 2. The Hybrid/EV Powertrain Control Module 2 sends the signal to the cooling fan to operate and at what speed.

If the vehicle is in Charge Mode and the Hybrid/EV Powertrain Control Module 2 requests the cooling fan to operate, if the engine control module is not awake, the Hybrid/EV Powertrain Control Module 2 will control the cooling fan. If active cooling is needed, the engine control module wakes up to operate the air conditioning control module and then the engine control module is the master controller for the fan.

Reference Information

Schematic Reference

Hybrid/EV Cooling Schematics on page 9-201

Connector End View Reference

Component Connector End Views on page 11-455

Description and Operation

Hybrid Cooling System Description and Operation on page 9-343

Electrical Information Reference

- *Circuit Testing on page 11-871*
- *Connector Repairs on page 11-895*
- *Testing for Intermittent Conditions and Poor Connections on page 11-877*
- *Wiring Repairs on page 11-883*

DTC Type Reference

Powertrain Diagnostic Trouble Code (DTC) Type Definitions on page 6-92

Scan Tool Reference

Control Module References on page 6-3 for scan tool information

Circuit/System Verification

1. Vehicle in Service Mode.
2. Command the Cooling Fan Motor Command to 90% with a scan tool. Verify that the cooling fan is operating.

⇒ **The cooling fan is not operating**

Refer to Circuit/System Testing

⇓ **The cooling fan is operating**

3. All OK.

Circuit/System Testing

1. Vehicle OFF, disconnect the harness connector at the G10 Cooling Fan Motor.
2. Test for less than 10 Ω between the ground circuit terminal 2 and ground.

⇒ **If 10 Ω or greater**

Test the ground circuit for an open/high resistance.

⇓ **If less than 10 Ω**

3. Vehicle in Service Mode.
4. Test for B+ between the B+ circuit terminal 1 and ground.

⇒ **If less than B+**

4.1. Vehicle OFF, test for infinite resistance between the B+ circuit and ground.

⇒ If less than infinite resistance, repair the short to ground on the circuit.

⇓ If infinite resistance

4.2. Test for less than 2 Ω in the B+ circuit end to end.

⇒ If 2 Ω or greater, repair the open/high resistance in the circuit.

⇒ If less than 2 Ω and the fuse is blown, replace the G10 Cooling Fan Motor.

⇓ **If B+**

5. Connect a test lamp between the control circuit terminal 4 and the B+ circuit terminal 1.
6. Command the Cooling Fan Motor Command ON between 10 % and 90 % with a scan tool. Verify the test lamp changes between dim (10 %) and bright (90 %).

⇒ **If the test lamp is always dim or does not illuminate**

6.1. Vehicle OFF, disconnect the X2 harness connector at the K114B Hybrid/EV Powertrain Control Module 2.

6.2. Test for less than 1 V between the control circuit and ground

⇒ If 1 V or greater, repair the short to voltage on the circuit.

⇓ If less than 1 V

6.3. Test for less than 2 Ω in the control circuit end to end.

⇒ If 2 Ω or greater, repair the open/high resistance in the circuit.

⇒ If less than 2 Ω, replace the K114B Hybrid/EV Powertrain Control Module 2.

⇒ **If the test lamp is always bright**

6.1. Vehicle OFF, disconnect the X2 harness connector at the K114B Hybrid/EV Powertrain Control Module 2.

6.2. Test for infinite resistance between the control circuit and ground.

⇒ If less than infinite resistance, repair the short to ground on the circuit.

⇒ If infinite resistance, replace the K114B Hybrid/EV Powertrain Control Module 2.

⇓ **The test lamp changes illumination between bright (20 %) and dim (90 %)**

7. Replace the G10 Cooling Fan Motor.

Repair Instructions

Perform the *Diagnostic Repair Verification on page 6-123* after completing the repair.

- *Cooling Fan and Shroud Replacement on page 9-283*
- *Control Module References on page 6-3* for hybrid/EV powertrain control module 2 replacement, programming and setup.

Hybrid/EV Battery Pack Coolant Heater Malfunction

Diagnostic Instructions

- Perform the *Diagnostic System Check - Vehicle on page 6-91* prior to using this diagnostic procedure.
- Review *Strategy Based Diagnosis on page 6-83* for an overview of the diagnostic approach.
- *Diagnostic Procedure Instructions on page 6-84* provides an overview of each diagnostic category.

Circuit/System Description

The hybrid/EV battery contains 6 high voltage contactors and 1 module. The high voltage contactors and transistor allow the high voltage DC batteries to be connected to the vehicle or safely contain the high

voltage DC within the hybrid/EV battery assembly. The 6 high voltage contactors consist of a main positive high voltage contactor, main negative high voltage contactor, charge positive high voltage contactor, charge negative high voltage contactor, multi-function high voltage contactor and precharge contactor. The 1 module is the heater module or heater control module. The contactors and module close and open in a specific sequence controlled by the hybrid/EV powertrain control module 2. The hybrid/EV powertrain control module 2 supplies voltage to the control circuit for the high voltage contactors/module. Ground is provided through the case ground and chassis.

The Hybrid/EV Battery Pack Coolant Heater is mounted to the coolant inlet on the back side of the hybrid/EV battery contactor assembly. They Hybrid/EV Battery Pack Coolant Heater uses a 360 V power source.

After the vehicle is turned ON, the Hybrid/EV Battery Pack Coolant Heater is commanded ON. The Hybrid/EV Powertrain Control Module 2 monitors the temperature change at the Hybrid/EV Battery Pack coolant temperature sensor 1 to determine if the Hybrid/EV Battery Pack Coolant Heater is functioning properly.

Diagnostic Aids

- A malfunctioning pack heater may prevent battery heating and the vehicle will be unable to start in cold weather with battery temperatures below −25° C (−13° F).
- A malfunctioning pack heater may have discoloration of the metal housing or the metal housing may be deformed.

Reference Information

Schematic Reference

Hybrid/EV Cooling Schematics on page 9-201

Connector End View Reference

Component Connector End Views on page 11-455

Description and Operation

Hybrid Cooling System Description and Operation on page 9-343

Electrical Information Reference

- *Circuit Testing on page 11-871*
- *Connector Repairs on page 11-895*
- *Testing for Intermittent Conditions and Poor Connections on page 11-877*
- *Wiring Repairs on page 11-883*

DTC Type Reference

Powertrain Diagnostic Trouble Code (DTC) Type Definitions on page 6-92

Scan Tool Reference

Control Module References on page 6-3 for scan tool information

Special Tools

- *EL-48900* HEV Safety Kit
- *EL-50772* Insulation Multimeter

For equivalent regional tools, refer to *Special Tools on page 9-344*.

Circuit/System Verification

1. Vehicle in Service Mode, verify that DTC P0AA1, P0AD9, P0ADD, P0AE2, P0AE4, P0AFA, P0C43, P0C44, P0C45, P0C47, P0D0A, P0D11, P0D22, P1E8C, P1E8D, P1EBC-P1EBF, P1EC0, P1EC3, P1EC5, P1F18, or P1FFB-P1FFE is not set.

⇒ **If any DTC is set**

Refer to *Diagnostic Trouble Code (DTC) List - Vehicle on page 6-92*.

⇓ **If none of the DTCs are set**

2. Vehicle OFF. Remove the F8UA fuse to the G37 Hybrid/EV Battery Pack Coolant Pump. Set the vehicle Charge Mode to IMMEDIATE. Connect the charge cord set. With the vehicle in Charge Mode, Vehicle in Service Mode.
3. Command the hybrid/EV battery pack coolant heater to 10 % with a scan tool.
4. Verify the scan tool Hybrid/EV Battery Pack Coolant Temperature Sensor 1 parameter increases 5–10° C (9–18° F).

⇒ **If the Hybrid/EV Battery Pack Coolant Temperature Sensor 1 did not increase**

Refer to Circuit/System Testing.

⇓ **If the Hybrid/EV Battery Pack Coolant Temperature Sensor 1 did increase**

5. All OK.

Circuit/System Testing

Danger: Always perform the High Voltage Disabling procedure prior to servicing any High Voltage component or connection. Personal Protection Equipment (PPE) and proper procedures must be followed.

The High Voltage Disabling procedure includes the following steps:

- ***Identify how to disable high voltage.***
- ***Identify how to test for the presence of high voltage.***
- ***Identify condition under which high voltage is always present and personal protection equipment (PPE) and proper procedures must be followed.***

Before working on any high voltage system, be sure to wear the following Personal Protection Equipment:

- ***Safety glasses with appropriate side shields when within 15 meters (50 feet) of the vehicle, either indoors or outdoors.***

- ***Certified and up-to-date Class "0" Insulation gloves rated at 1000V with leather protectors.***
  - ***Visually and functionally inspect the gloves before use.***
  - ***Wear the Insulation gloves with leather protectors at all times when working with the high voltage battery assembly, whether the system is energized or not.***

Failure to follow the procedures may result in serious injury or death.

Note: The Battery Pack will utilize an exchange program. Please consult the most recent revision of bulletin/PI #PIP5112, available in Service Information (SI), for a list of approved Battery Pack service procedures. Components that may be removed and serviced without exchanging the complete battery pack are identified in the bulletin/PI. Please contact the GM Technical Assistance Center if you have any questions.

1. Vehicle OFF, disable the high voltage. Refer to *High Voltage Disabling on page 9-363*. Remove the Drive Motor Battery Cover. Refer to *Drive Motor Battery Cover Replacement on page 9-449*. Disconnect the harness connector at the E54 Hybrid/EV Battery Pack Coolant Heater.
2. Test for 61–75 Ω between terminal A and terminal B at the E54 Hybrid/EV Battery Pack Coolant Heater.

⇒ **If not within the specified range**

Verify that the Hybrid/EV Battery Pack Coolant Heater maxi–fuse is not blown. Replace the Hybrid/EV Battery Pack Coolant Heater maxi-fuse if it is blown and the E54 Hybrid/EV Battery Pack Coolant Heater.

⇓ **If within the specified range**

Note: The following continuity tests must be performed using an *EL-50772* Insulation Multimeter. Select the Isolation test setting, then select the 500 V range.

3. With the *EL-50772* , set on the Isolation test setting, test for 550M Ω between the E54 Hybrid/EV Battery Pack Coolant Heater terminals listed below and battery tray ground:
   - Terminal A
   - Terminal B

⇒ **If less than the specified value**

Verify that the Hybrid/EV Battery Pack Coolant Heater maxi-fuse is not blown. Replace the Hybrid/EV Battery Pack Coolant Heater maxi-fuse if it is blown and the E54 Hybrid/EV Battery Pack Coolant Heater.

⇓ **If within the specified value**

4. Replace the A28 Hybrid/EV Battery Contactor Assembly.

Repair Instructions

Perform the *Diagnostic Repair Verification on page 6-123* after completing the repair.

- Hybrid/EV Battery Pack Coolant Heater maxi-fuse replacement
- *Battery Heater Replacement on page 9-306*
- *Drive Motor Battery Positive High Voltage Contactor Relay Replacement on page 9-499*

Hybrid Cooling System Loss of Coolant (Drive Motor Battery Cooling System)

Step	Action	Yes	No
DEFINITION: Perform this procedure in conjunction with a high-voltage battery overheating condition, low coolant in the high-voltage battery surge tank, or when instructed to by DTC P1AE6, or P0AA6 diagnostic procedures. ***Danger: Before working on any high voltage system, be sure to wear the following Personal Protection Equipment:*** • ***Safety glasses with appropriate side shields when within 50 feet of the vehicle, either indoors or outdoors*** • ***Certified and up-to-date Class "0" Insulation gloves rated at 1000V with leather protectors*** – ***Visually and functionally inspect the gloves before use.*** – ***Wear the Insulation gloves at all times when working with the high voltage battery assembly, whether the system is energized or not.*** ***Failure to follow the procedure exactly as written may result in serious injury or death.***			
1	Raise and support the hood with prop rod. Was the hood raised and supported with the prop rod?	Go to *Step 2*	Go to *Step 1*
2	Visually inspect the coolant level in the high-voltage battery surge tank. Is the coolant level at or above the seam on the side of the surge tank?	Go to *Step 3*	Go to *Step 4*
3	Are any of the following DTCs present? • P0AA6 (Hybrid/EV Battery Voltage System Isolation Lost) • P1AE6 (Battery Energy Control Module Hybrid/EV Battery Voltage Isolation Sensor Circuit)	Perform DTC Diagnostics.	Go to *Step 4*

Hybrid Cooling System Loss of Coolant (Drive Motor Battery Cooling System) (cont'd)

Step	Action	Yes	No
4	Call the GM Technical Assistance Center (TAC) for further instructions. **DO NOT ATTEMPT TO REPAIR VEHICLE WITHOUT CALLING TAC.** Was TAC called?	Go to *Step 5*	Go to *Step 4*
5	Special Tools: • EN-24460-A cooling system pressure tester • GE-46143-2 radiator cap and surge tank test adapter Pressure test high-voltage battery cooling loop and pressure cap to 34.4 kPa (5 psi). Does the system hold pressure for at least 5 minutes?	Go to *Step 9*	Go to *Step 6*
6	**Note:** When raising vehicle on hoist, vehicle must be level. Visually inspect the following components. Also inspect their hoses, clamps, and hose connections for coolant leaks: • Coolant surge tank • Air separator • HV battery radiator • HV battery coolant pump • HV battery four-way valve • HV battery chiller • HV battery assembly Was a coolant leak found?	Replace component(s), hose(s), or clamp(s) that is/are leaking. Refer to appropriate procedure(s). Validate repair with additional pressure test. Then Go to *Step 9*	Go to *Step 7*
7	If no external leaks are found ensure leak is not coming from test equipment. Is equipment faulty?	Repair Equipment. Go to *Step 6*	Go to *Step 8*
8	Visually inspect the following components internal to the drive motor battery. Also inspect their hoses, clamps, and hose connections for coolant leaks: • Battery Heater • Cell Battery Cooling Manifold Inlet Hose • Cell Battery Cooling Manifold Outlet Hose • Coolant Temperature Sensor Is leak repair complete?	Go to *Step 9*	Go to *Step 5*
9	Special Tools: • GE-26568 Coolant and Battery Tester • GE-47716-A Vac-N-Fill Coolant Refill Tool • GE-46143-2 Radiator Cap and Surge Tank Test Adapter Fill and adjust high-voltage battery cooling system level at the surge tank. Refer to *Drive Motor Battery Cooling System Draining and Filling on page 9-257*. Was a coolant leak found?	Go to *Step 10*	Go to *Step 6*
10	Verify the following before returning vehicle to customer: Coolant level is at the top of the seam of the high-voltage battery surge tank. Did you find and correct the condition?	System OK	Go to *Step 1*

Hybrid Cooling System Loss of Coolant (Drive Motor Generator Power Inverter Module Cooling System)

Step	Action	Yes	No
DEFINITION: The power inverter module (PIM) cooling system is losing coolant either internally or externally.			
1	Inspect the coolant level. Is the coolant at the proper level?	Go to *Step 13*	Go to *Step 2*

Hybrid Cooling System Loss of Coolant (Drive Motor Generator Power Inverter Module Cooling System) (cont'd)

Step	Action	Yes	No
2	Fill the cooling system to the proper level. Refer to *Drive Motor Generator Power Inverter Module Cooling System Draining and Filling on page 9-264*. Is the action complete?	Go to *Step 3*	—
3	Overheating can cause a loss of coolant. Is the PIM Cooling system overheating?	Go to *Step 11*	Go to *Step 4*
4	Visually inspect the hoses, pipes and hose clamps. Are any of the hoses, clamps or pipes leaking?	Go to *Step 12*	Go to *Step 5*
5	Visually inspect the following components: • Coolant surge tank • Coolant pressure cap • Drive motor generator power inverter module • Air separator • Radiators • Coolant pumps • Coolant valves • Drive motor battery charger Are any of the listed components leaking?	Go to *Step 12*	Go to *Step 6*
6	1. Pressure test the cooling system. Refer to *Hybrid Cooling System Leak Test on page 9-256*. 2. With the cooling system pressurized, visually inspect the components listed in step 5. Are any leaks present?	Go to *Step 12*	Go to *Step 7*
7	Pressure test the coolant pressure cap. Refer to *Hybrid Cooling System Pressure Cap Testing on page 9-256*. Does the coolant pressure cap hold pressure?	Go to *Step 9*	Go to *Step 8*
8	Replace the coolant pressure cap. Is the repair complete?	Go to *Step 13*	—
9	1. Pressure test the cooling system. Refer to *Hybrid Cooling System Leak Test on page 9-256*. 2. With the cooling system pressurized, remove the engine cooling system pressure cap. Does the hybrid cooling system hold pressure?	—	Go to *Step 10*
10	Replace the surge tank. Refer to *Radiator Surge Tank Replacement (Reserve Energy Supply System Reservoir) on page 9-276* or *Radiator Surge Tank Replacement (Power Energy Reservoir) on page 9-277* or *Radiator Surge Tank Replacement (Heater Reservoir) on page 9-278*. Is the repair complete?	Go to *Step 13*	—
11	Repair the hybrid cooling system overheating condition. Is the repair complete?	Go to *Step 13*	—
12	Repair or replace the leaking component. Refer to the appropriate repair. Is the repair complete?	Go to *Step 13*	—
13	Operate the system in order to verify the repair. **Note:** Do not use stop leak or any other chemicals. Only use premix Dexcool (50/50 mixture of Dexcool and deionized) Did you find and correct the condition?	System OK	Go to *Step 2*

Hybrid Cooling System Pressure Cap Testing

Special Tools

- *GE-46143-2* Radiator Cap and Surge Tank Test Adapter
- *EN-24460-A* Cooling System Pressure Tester

For equivalent regional tools, Refer to *Fastener Tightening Specifications on page 9-199*.

Pressure Cap Testing

Warning: To avoid being burned, do not remove the radiator cap or surge tank cap while the engine is hot. The cooling system will release scalding fluid and steam under pressure if radiator cap or surge tank cap is removed while the engine and radiator are still hot.

1. Remove the pressure cap.
2. Wash the pressure cap sealing surface with water.

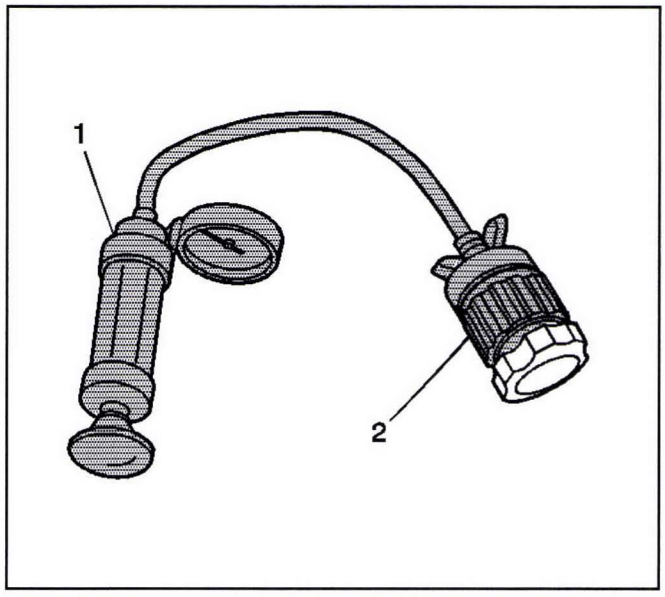

850101

Note: Lubricate *GE-46143-2* Radiator Cap and Surge Tank Test Adapter and pressure cap O-rings with coolant and press cap to seat O-ring on *GE-46143-2* Radiator Cap and Surge Tank Test Adapter before turning to engage threads.

3. Use the *EN-24460-A* Cooling System Pressure Tester (1) with *GE-46143-2* Radiator Cap and Surge Tank Test Adapter (2) in order to test the pressure cap.
4. Test the pressure cap for the following conditions:
   - Pressure release when the *EN-24460-A* Cooling System Pressure Tester exceeds the pressure rating of the pressure cap.
   - Maintain the rated pressure for at least 10 seconds.

     Note the rate of pressure loss.
5. Replace the pressure cap under the following conditions:
   - The pressure cap does not release pressure which exceeds the rated pressure of the cap.
   - The pressure cap does not hold the rated pressure.

Hybrid Cooling System Leak Test

Special Tools

- *EN-24460-A* Cooling System Pressure Tester
- *GE-46143-2* Radiator Cap and Surge Tank Test Adapter

For equivalent regional tools, Refer to *Fastener Tightening Specifications on page 9-199*.

Warning: Under pressure, the temperature of the solution in the radiator can be considerably higher, without boiling. Removing the radiator cap while the engine is hot (pressure is high), will cause the solution to boil instantaneously, with explosive force. The solution will spew out over the engine, fenders, and the person removing the cap. Serious bodily injury may result. Flammable antifreeze, such as alcohol, is not recommended for use at any time. Flammable antifreeze could cause a serious fire.

Warning: In order to help avoid being burned, do not remove the radiator cap while the engine and the radiator are hot. Scalding fluid and steam can be blown out under pressure if the cap is removed too soon.

1. Remove the pressure cap.
2. Test the operation of the pressure cap. Refer to *Hybrid Cooling System Pressure Cap Testing on page 9-256*.
3. Wash the pressure cap mating surface with water.

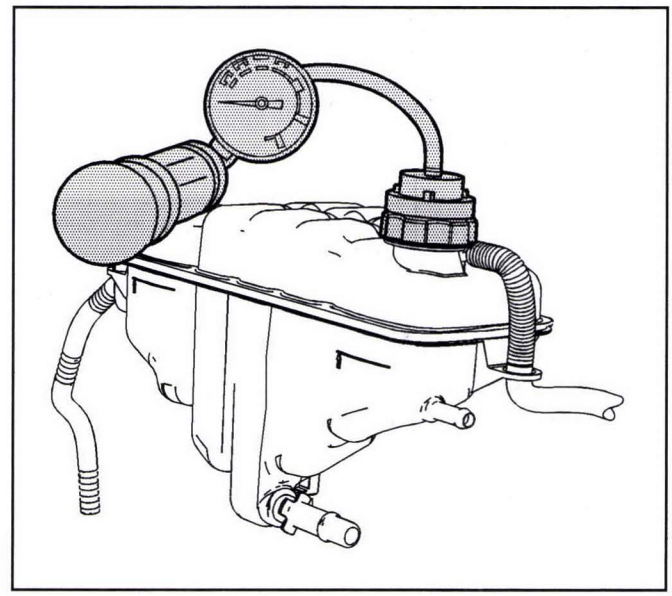

1992535

4. Use the *EN-24460-A* Cooling System Pressure Tester with the *GE-46143-2* Radiator Cap and Surge Tank Test Adapter in order to apply pressure to the cooling system.

   Do not exceed the pressure cap rating.
5. The cooling system should hold the rated pressure for at least 2 minutes.

   Observe the gauge for any pressure loss.

   Note: Do not use stop leak or any other chemicals. Only use premix Dexcool (50/50 mixture of Dexcool and deionized)
6. Repair any leaks as required.

Hybrid Battery Pack Coolant Passage Leak Test

Special Tools

- *EN-24460-A* Cooling System Pressure Tester
- *GE-47716* Vac-N-Fill Coolant Refill Tool
- *GE-50385* Battery Pack Coolant Passage Pressure Test Adapter
- *GE-50389* Coolant Pressure Test Quick Connecter

For equivalent regional tools, refer to *Special Tools on page 9-344*.

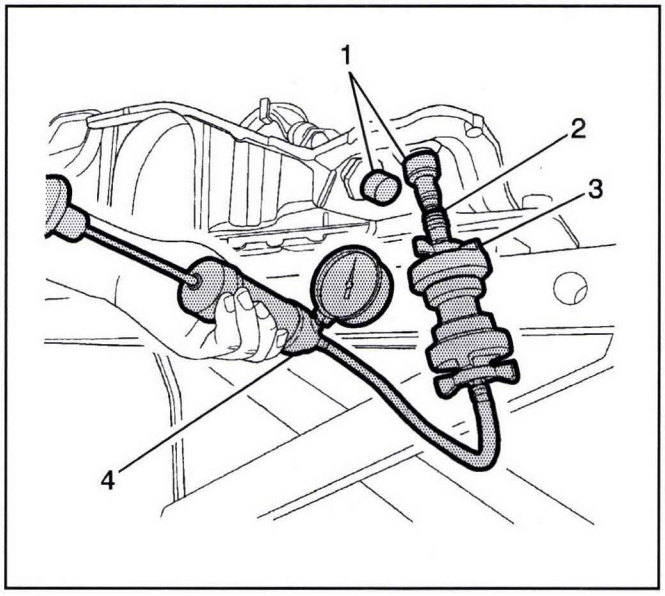

3613551

Warning: Under pressure, the temperature of the solution in the radiator can be considerably higher, without boiling. Removing the radiator cap while the engine is hot (pressure is high), will cause the solution to boil instantaneously, with explosive force. The solution will spew out over the engine, fenders, and the person removing the cap. Serious bodily injury may result. Flammable antifreeze, such as alcohol, is not recommended for use at any time. Flammable antifreeze could cause a serious fire.

Warning: In order to help avoid being burned, do not remove the radiator cap while the engine and the radiator are hot. Scalding fluid and steam can be blown out under pressure if the cap is removed too soon.

1. Install Cooling System Pressure Tester Cap Adapter to *EN-24460-A* Cooling System Pressure Tester (4).
2. Install *GE-47716-8* Vac-N-Fill Cap (3) to Cooling System Pressure Tester Cap Adapter.
3. Install *GE-50389* Coolant Pressure Test Quick Connecter (2) to *GE-47716-8* Vac-N-Fill Cap (3).
4. Install *GE-50385-1* Coolant Pressure Tester Adapter (1) to *GE-50389* Quick Connecter (2).
5. Install *GE-50385-1* Coolant Pressure Tester Adapter (1) to battery pack inlet connector.
6. Install *GE-50385-2* Coolant Pressure Tester Adapter (1) to battery pack outlet connector.
7. Apply pressure to the battery pack coolant passages.

   Do not exceed the pressure cap rating.
8. The cooling passages should hold the rated pressure for at least 2 minutes.

   Observe the gauge for any pressure loss.
9. Repair any leaks as required.

Repair Instructions

Drive Motor Battery Cooling System Draining and Filling

Special Tools

- *GE-26568* Coolant and Battery Tester
- *GE-46143–2* Cooling System Adapter
- *GE-47716* Vac-N-Fill Coolant Refill Tool
- *GE-50385* Battery Pack Coolant Passage Test Adapter

Equivalent regional tools: *Special Tools on page 9-344*

Danger: Before conducting any repair to this high voltage cooling system, it is necessary to determine/verify whether no high-voltage system faults exist. If high-voltage faults exist, follow published DTC diagnostics/repair procedures prior to performing any cooling system repairs. Failure to correct High Voltage Faults before working on the high voltage cooling system could result in personal injury or death.

Danger: Do not use a service jack in locations other than those specified to lift this vehicle. Lifting the vehicle with a jack in those other locations could cause the vehicle to slip off the jack and roll; this could cause injury or death.

Warning: To avoid being burned, do not remove the radiator cap or surge tank cap while the engine is hot. The cooling system will release scalding fluid and steam under pressure if radiator cap or surge tank cap is removed while the engine and radiator are still hot.

Draining Procedure

Note: Draining of the cooling system or replacement of any drive motor battery cooling system parts requires the actuation of the Hybrid/EV Battery Pack Coolant Pump Bleed Procedure in the GDS tool.

1. Turn vehicle power OFF and remove all keyless entry transmitters from the vehicle and secure in a place outside the vehicle.
2. Remove the radiator surge tank support bracket. *Radiator Surge Tank Support Bracket Replacement on page 9-281.*
3. Remove the radiator surge tank cap.
4. Raise and support the vehicle. *Lifting and Jacking the Vehicle on page 1-27.*
5. Place a drain pan under the vehicle.
6. To drain the coolant remove the drive motor battery coolant inlet hose from RESS to inlet long pipe at the drive motor battery coolant inlet pipe. *Drive Motor Battery Coolant Inlet Hose Replacement (From RESS to Inlet Long Pipe) on page 9-321* or *Drive Motor Battery Coolant Inlet Hose Replacement (From Water Pump to Drive Motor Battery Coolant Inlet Pipe Long) on page 9-322* or *Drive Motor Battery Coolant Inlet Hose Replacement (Outlet Hose Connector to Radiator) on page 9-323.*
7. Remove the drive motor battery coolant cooler outlet hose from RESS to outlet long pipe at the drive motor battery coolant outlet pipe. *Drive Motor Battery Coolant Cooler Outlet Hose Replacement (From the Coolant Flow Valve to Radiator) on page 9-316* or *Drive Motor Battery Coolant Cooler Outlet Hose Replacement (From RESS to Outlet Long Pipe) on page 9-317.*
8. Remove the radiator drain cock. *Radiator Drain Cock Replacement on page 9-286.*
9. Remove the coolant from the drive motor battery cells.
10. Inspect the coolant.

Drive Motor Battery Cell Coolant Removal

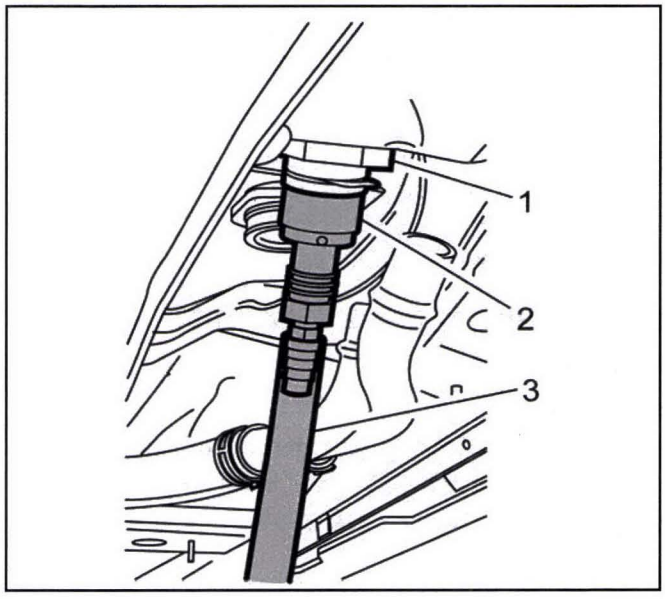

4209390

1. Attach the *GE-50385–1* Battery Pack Coolant Passage Test Adapter (2) to the drive motor battery coolant Inlet (1).
2. Attach the Vac-N-Fill Vacuum Hose (3)*GE-47716* Vac-N-Fill Coolant Refill Tool to the *GE-50385–1* Battery Pack Coolant Passage Test Adapter (2).

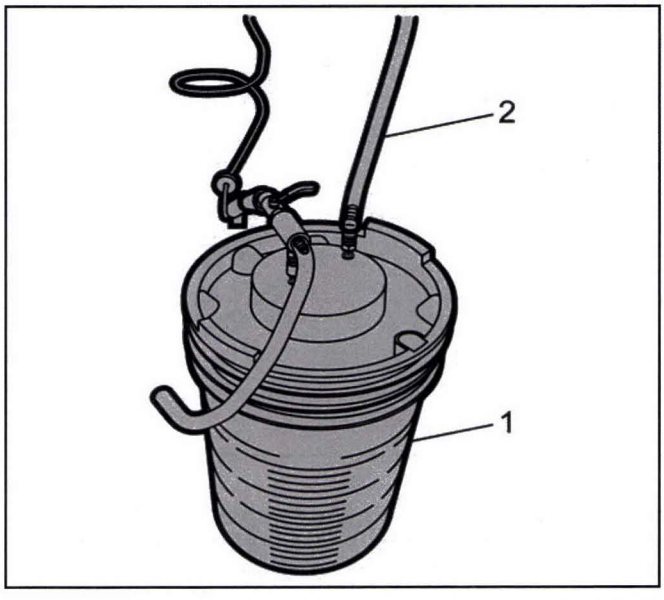

4209394

3. Attach the Vac-N-Fill Vacuum Hose (2) to the Vac-N-Fill Vacuum Tank (1)*GE-47716* Vac-N-Fill Coolant Refill Tool

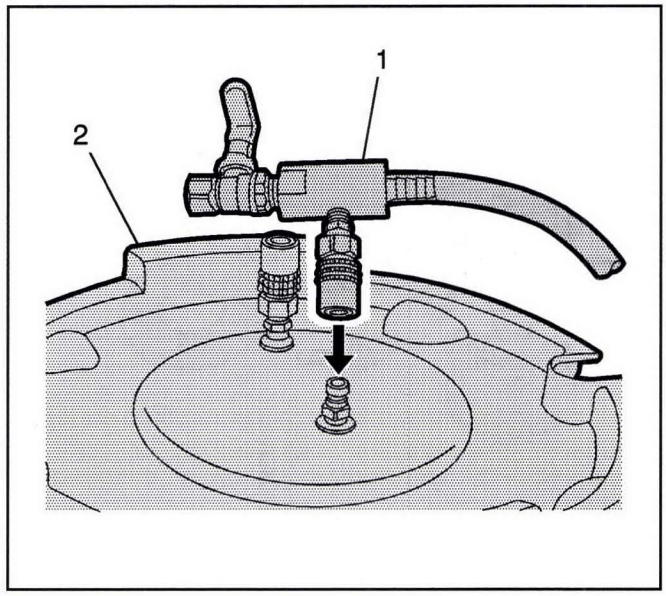

2846171

4. Attach the venturi assembly (1) to the vacuum tank (2).

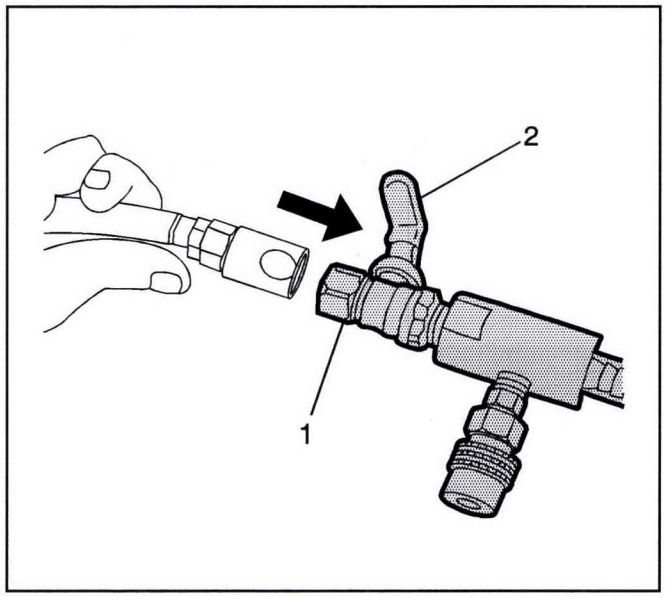

2846172

5. Attach a shop air hose to the venturi assembly (1).
6. Ensure the valve (2) on the venturi assembly is closed.
7. Ensure the drain valve located on the bottom of the vacuum tank is closed.

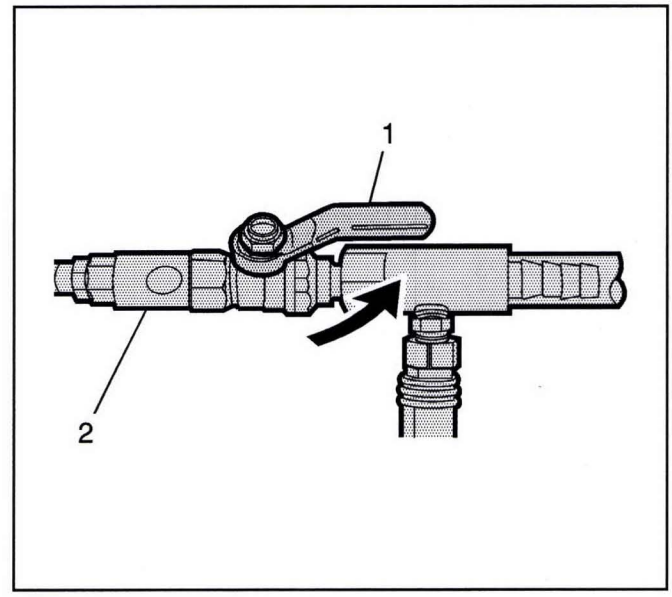

2846175

8. Open the valve (1) on the venturi assembly (2). The vacuum gauge will begin to rise and a hissing noise will be present.

   Coolant will be drawn from the drive motor battery through the vacuum hose and into the vacuum tank.

   Continue to draw coolant from the drive motor battery until there is a continuous mist through the vacuum hose.
9. Install the GE-50385-2 coolant pressure tester adapter plug into the drive motor battery coolant outlet fitting and allow vacuum to build in the drive motor battery for 15-20 seconds.
10. With a vacuum drawn on the Drive Motor Battery cooling system, remove the GE-50385-2 Coolant Pressure Tester Adapter Plug and allow air to enter the pack to extract additional coolant from the Drive Motor Battery.
11. Repeat steps 7 and 8 until coolant stops draining from the drive motor battery.
12. The vacuum tank has a drain valve on the bottom of the tank. Open the valve to drain coolant from the vacuum tank into a suitable container for disposal.

Vac-N-Fill Procedure

1. Install the drive motor battery coolant cooler outlet hose at the drive motor battery coolant outlet pipe. *Drive Motor Battery Coolant Cooler Outlet Hose Replacement (From the Coolant Flow Valve to Radiator) on page 9-316* or *Drive Motor Battery Coolant Cooler Outlet Hose Replacement (From RESS to Outlet Long Pipe) on page 9-317*.

2. Install the drive motor battery coolant inlet hose at the drive motor battery coolant inlet pipe. *Drive Motor Battery Coolant Inlet Hose Replacement (From RESS to Inlet Long Pipe) on page 9-321* or *Drive Motor Battery Coolant Inlet Hose Replacement (From Water Pump to Drive Motor Battery Coolant Inlet Pipe Long) on page 9-322* or *Drive Motor Battery Coolant Inlet Hose Replacement (Outlet Hose Connector to Radiator) on page 9-323*.
3. Install the radiator drain cock. *Radiator Drain Cock Replacement on page 9-286*.
4. Turn vehicle power OFF and remove all keyless entry transmitters from the vehicle and secure in a place outside the vehicle.

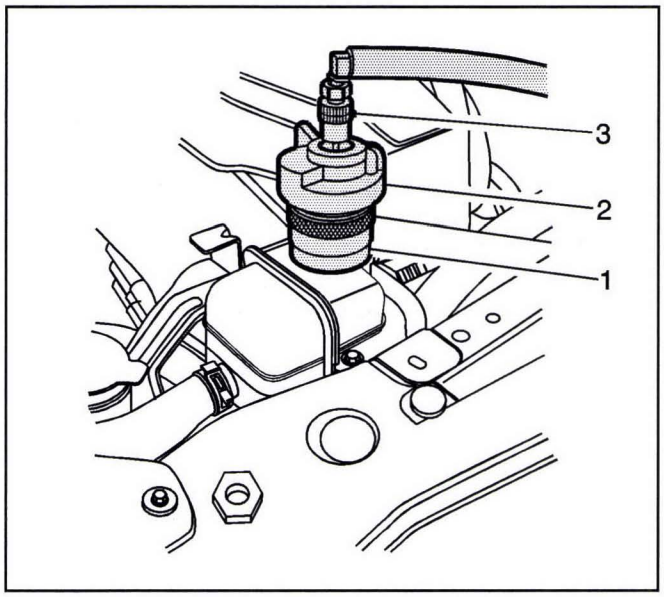

3242381

Note: To prevent boiling of the coolant/water mixture in the vehicles cooling system, do not apply vacuum to a cooling system above 49°C (120°F). The tool will not operate properly when the coolant is boiling.

5. Install *GE-46143-2* adapter (1).
6. Attach the Van-N-Fill cap (2) to *GE-46143-2* adapter (1).
7. Attach the vacuum gauge assembly (3) to the Vac-N-Fill cap (2).

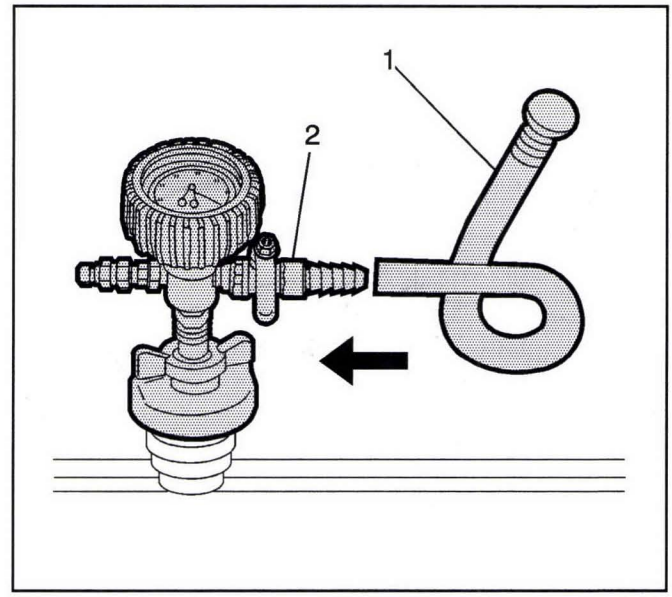

2846166

8. Attach the fill hose (1) to the barb fitting on the vacuum gauge assembly.
   Ensure that the valve is closed.

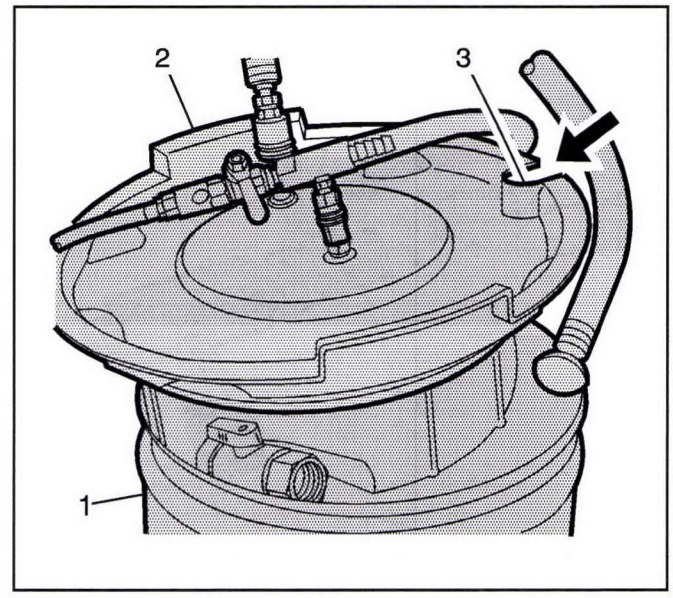

2846170

Note: Use a Pre-mixed DEXCOOL® (50/50 mixture of DEXCOOL® and deionized water). Always use more coolant than necessary. This will eliminate air from being drawn into the cooling system.

9. Pour the coolant mixture into the graduated reservoir (1).
10. Place the fill hose in the graduated reservoir (1).
    Note: Prior to installing the vacuum tank onto the graduated reservoir, ensure that the drain valve located on the bottom of the tank is closed.
11. Install the vacuum tank (2) on the graduated reservoir with the fill hose routed through the cut-out area (3) in the vacuum tank.

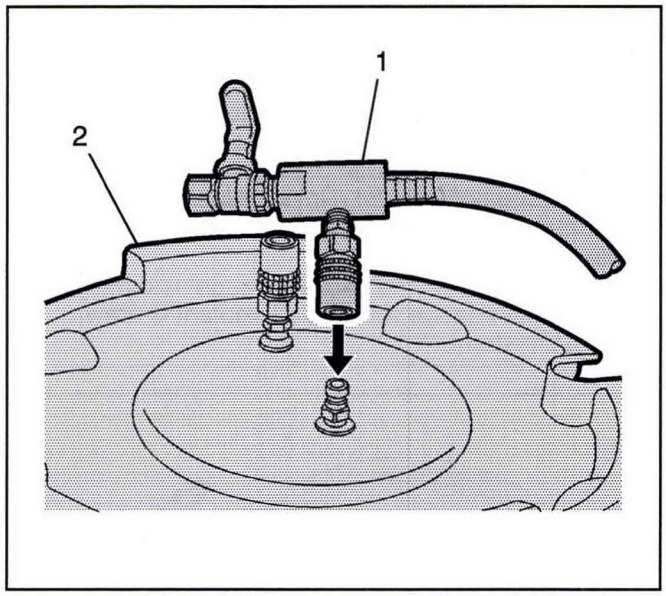

2846171

12. Attach the venturi assembly (1) to the vacuum tank (2).

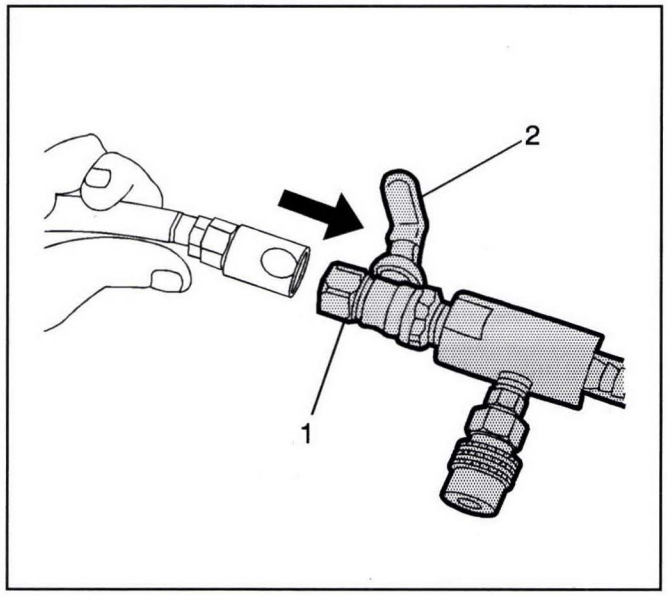

2846172

13. Attach a shop air hose to the venturi assembly (1). Ensure the valve (2) on the venturi assembly is closed.

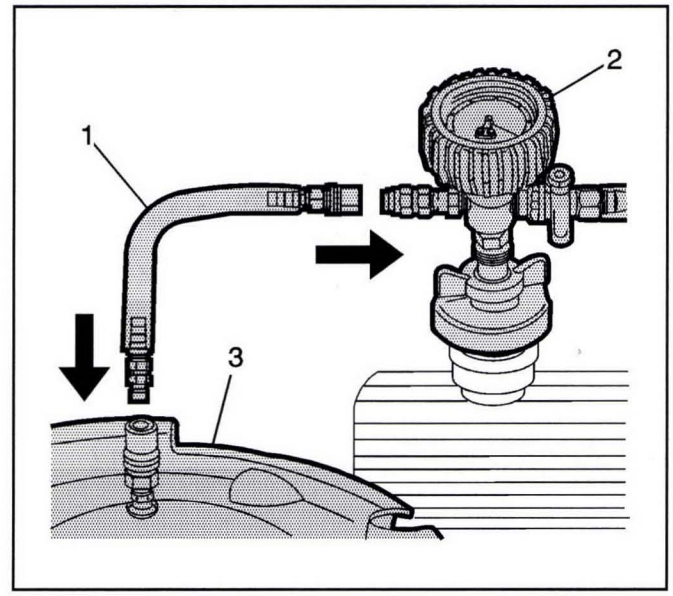

2846173

14. Attach the vacuum hose (1) to the vacuum gauge assembly (2) and the vacuum tank (3).

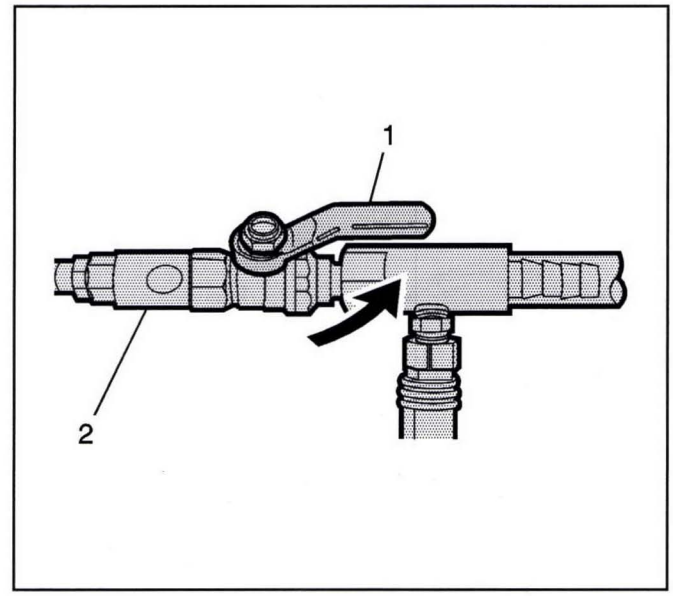

2846175

15. Open the valve (1) on the venturi assembly (2). The vacuum gauge will begin to rise and a hissing noise will be present.

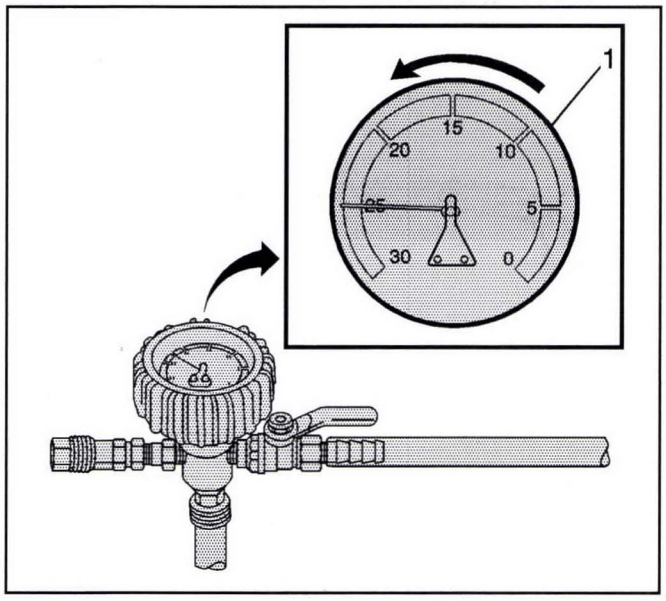

2846177

16. Continue to draw vacuum until the needle stops rising (1). This should be 610–660 mm Hg (24–26 in Hg).

    Cooling hoses may start to collapse. This is normal due to vacuum draw.
17. To aid in the fill process, position the graduated reservoir above the coolant fill port.

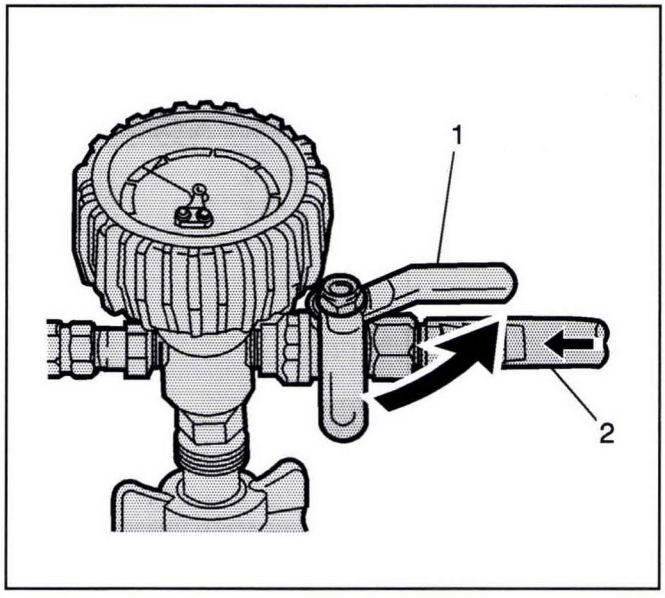

2846183

18. Slowly open the valve (1) on the vacuum gauge assembly (2). When the coolant reaches the top of the fill hose, close the valve. This will eliminate air from the fill hose.
19. Close the valve on the venturi assembly.
20. If there is a suspected leak in the cooling system, allow the system to stabilize under vacuum and monitor for vacuum loss.

    If vacuum loss is observed, refer to *Hybrid Cooling System Loss of Coolant (Drive Motor Battery Cooling System) on page 9-253* or *Hybrid Cooling System Loss of Coolant (Drive Motor Generator Power Inverter Module Cooling System) on page 9-254*.
21. Open the valve on the vacuum gauge assembly. The vacuum gauge will drop as coolant is drawn into the system.

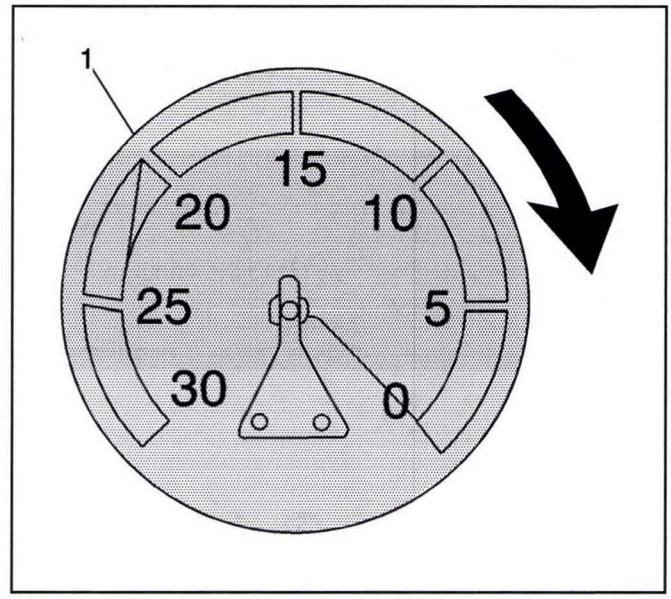

3242386

22. Once the vacuum gauge (1) reaches zero, close the valve on the vacuum gauge assembly and repeat steps 15–21.
23. Ensure that the vehicle is in service mode. *Power Mode Description and Operation on page 11-958*.
24. With the GDS scan tool, initiate the hybrid/EV battery pack coolant pump bleed procedure while maintaining 381 mm (15 in Hg) vacuum throughout the process. This procedure will take about 30 to 45 minutes to complete.
25. Detach the Vac-N-Fill cap from the *GE-46143-2* adapter.
26. Remove *GE-46143-2* adapter from the surge tank fill neck.

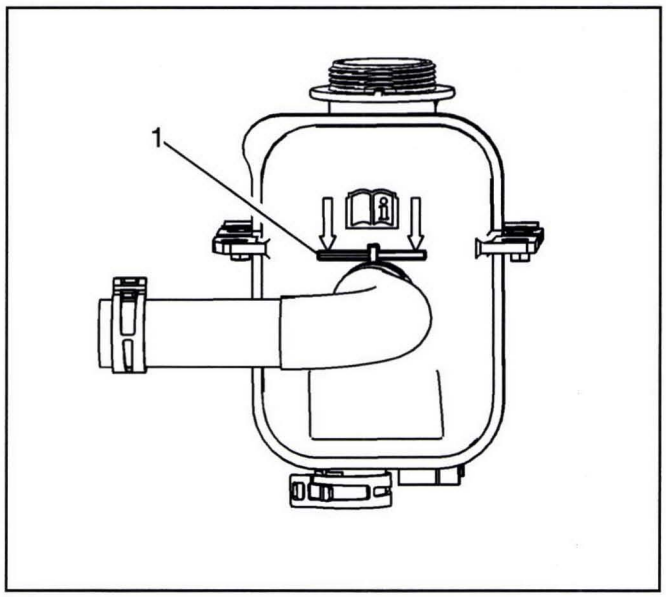

3242379

27. Upon completion of the hybrid/EV battery pack coolant pump bleed procedure, adjust the surge tank coolant level to a position just above the seam (1).
28. Inspect the concentration of the coolant mixture using *GE-26568* tester.

REMOVING EXCESS COOLANT FROM SYSTEM

Note: After filling the cooling system, the extraction hose can be used to remove excess coolant to achieve the proper coolant level.

1. Detach the vacuum hose from the vacuum gauge assembly.

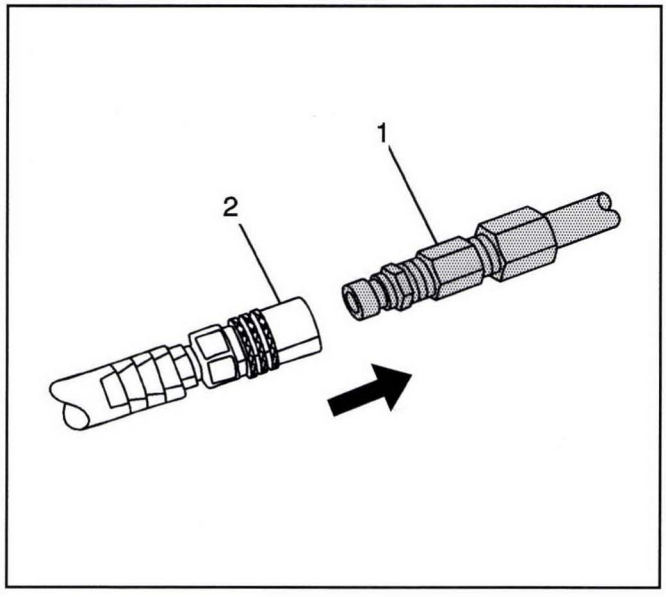

2857825

2. Attach the extraction hose (1) to the vacuum hose (2).

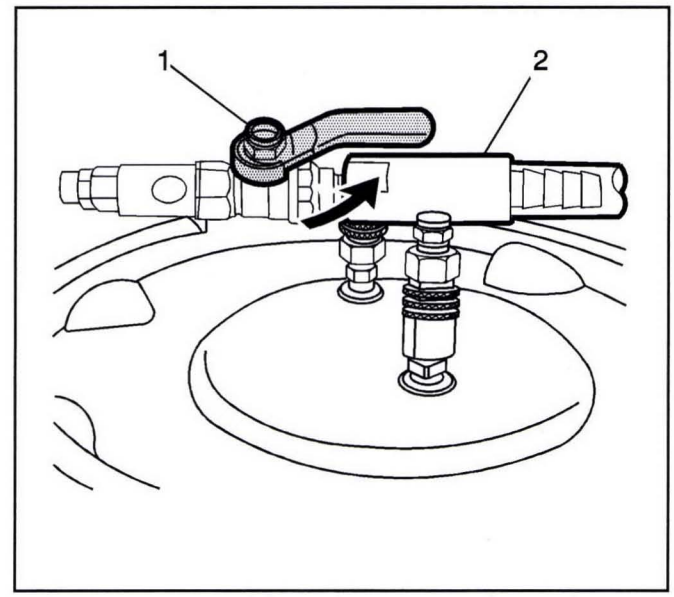

2857827

3. Open the valve (1) on the venturi assembly (2) to start a vacuum draw.

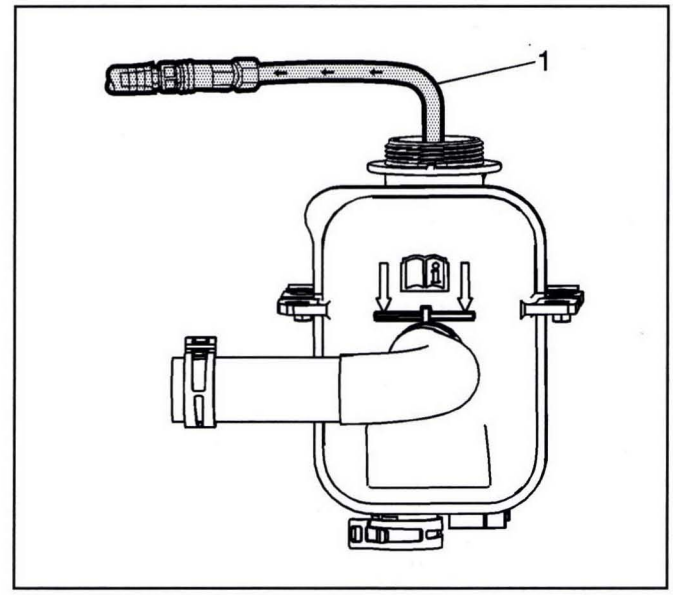

3242387

4. Assemble the extraction hose (1) and insert into the surge tank.

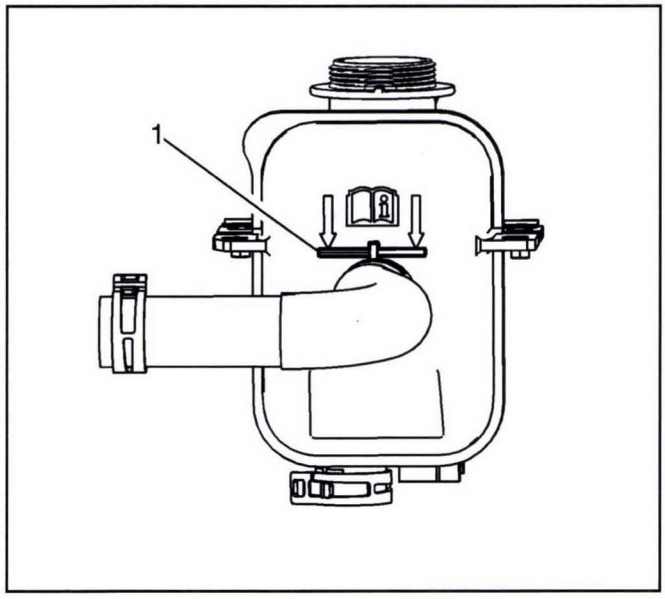

3242379

5. Adjust the surge tank coolant level to a position just above the seam (1).
6. The vacuum tank has a drain valve on the bottom of the tank. Open the valve to drain coolant from the vacuum tank into a suitable container for disposal.

Drive Motor Generator Power Inverter Module Cooling System Draining and Filling

Special Tools

- *GE-26568* Coolant and Battery Tester
- *GE-46143–2* Cooling System Adapter
- *GE-47716* Vac-N-Fill Coolant Refill Tool

For equivalent regional tools, refer to *Special Tools on page 9-344*.

Danger: Before conducting any repair to this high voltage cooling system, it is necessary to determine/verify whether no high-voltage system faults exist. If high-voltage faults exist, follow published DTC diagnostics/repair procedures prior to performing any cooling system repairs. Failure to correct High Voltage Faults before working on the high voltage cooling system could result in personal injury or death.

Danger: Do not use a service jack in locations other than those specified to lift this vehicle. Lifting the vehicle with a jack in those other locations could cause the vehicle to slip off the jack and roll; this could cause injury or death.

Warning: To avoid being burned, do not remove the radiator cap or surge tank cap while the engine is hot. The cooling system will release scalding fluid and steam under pressure if radiator cap or surge tank cap is removed while the engine and radiator are still hot.

Draining Procedure

Note: Draining of the cooling system or replacement of any drive motor battery cooling system parts requires the actuation of the Hybrid/EV Battery Pack Coolant Pump Bleed Procedure in the GDS tool.

1. Turn Vehicle Power Off and remove all keyless entry transmitters from the vehicle and secure in a place outside the vehicle.
2. Remove the radiator surge tank cap.
3. Raise and support the vehicle. Refer to *Lifting and Jacking the Vehicle on page 1-27*.
4. Place a drain pan under the vehicle.
5. Remove the front compartment air deflector. Refer to *Front Compartment Air Deflector Replacement on page 3-125*.
6. Remove the drive motor generator control module radiator inlet hose from the drive motor generator control module coolant pump. Refer to *Drive Motor Generator Control Module Radiator Inlet Hose Replacement (PE From LTR to A/Separator) on page 9-297*.
7. Inspect the coolant.

Vac-N-Fill Procedure

1. Install the drive motor generator control module radiator inlet hose to the drive motor generator control module coolant pump. Refer to *Drive Motor Generator Control Module Radiator Inlet Hose Replacement (PE From LTR to A/Separator) on page 9-297*.
2. Install the front compartment air deflector. Refer to *Front Compartment Air Deflector Replacement on page 3-125*.
3. Turn Vehicle Power Off and remove all keyless entry transmitters from the vehicle and secure in a place outside the vehicle.

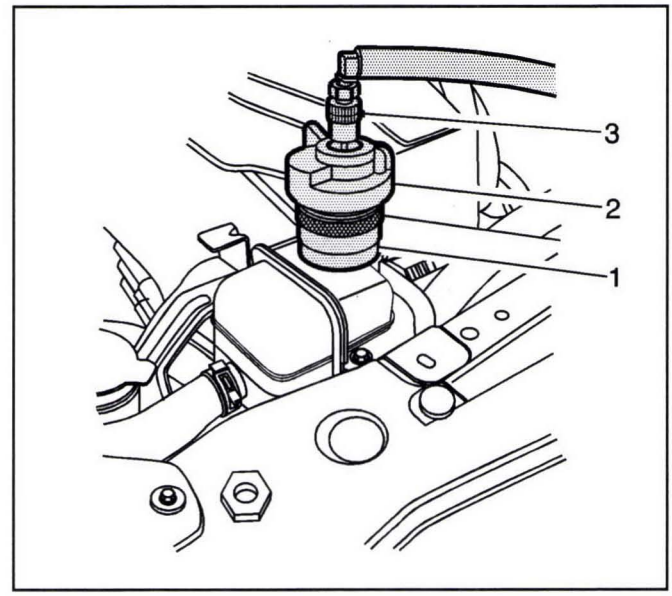

3242381

Note: To prevent boiling of the coolant/water mixture in the vehicles cooling system, do not apply vacuum to a cooling system above 49°C (120°F). The tool will not operate properly when the coolant is boiling.

4. Install *GE-46143-2* adapter (1).
5. Attach the Van-N-Fill cap (2) to *GE-46143-2* adapter (1).
6. Attach the vacuum gauge assembly (3) to the Vac-N-Fill cap (2).

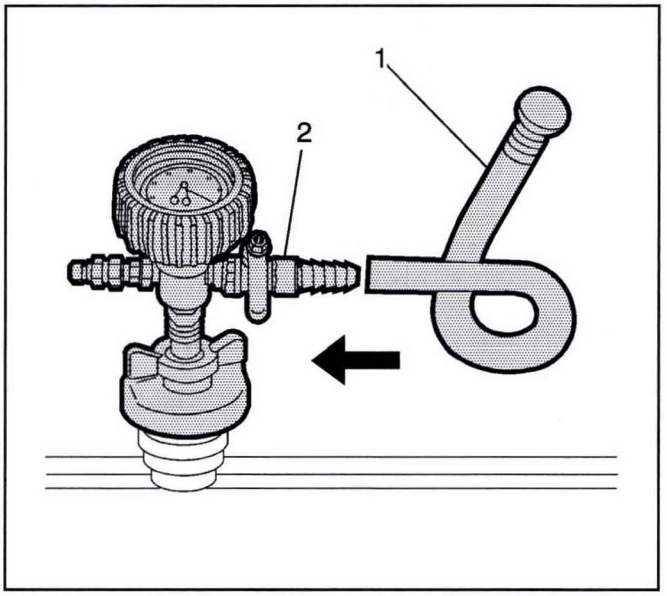

2846166

7. Attach the fill hose (1) to the barb fitting on the vacuum gauge assembly.
   Ensure that the valve is closed.

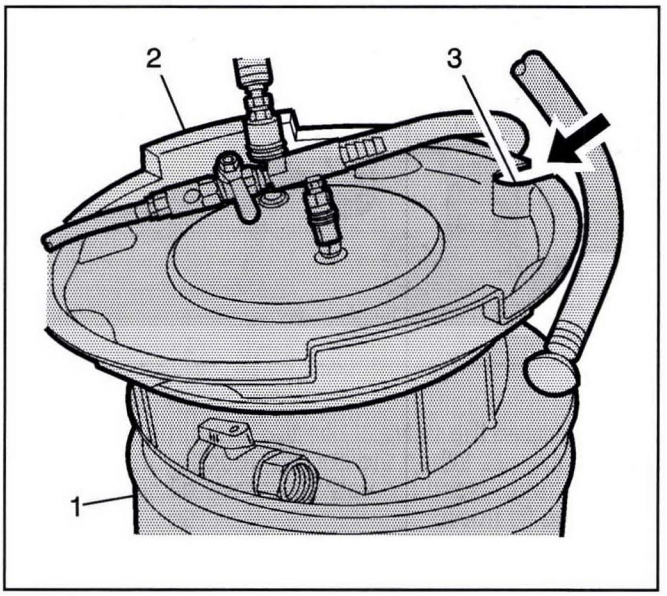

2846170

Note: Use a Pre-mixed DEXCOOL® (50/50 mixture of DEXCOOL® and deionized water). Always use more coolant than necessary. This will eliminate air from being drawn into the cooling system.

8. Pour the coolant mixture into the graduated reservoir (1).
9. Place the fill hose in the graduated reservoir (1).
   Note: Prior to installing the vacuum tank onto the graduated reservoir, ensure that the drain valve located on the bottom of the tank is closed.
10. Install the vacuum tank (2) on the graduated reservoir with the fill hose routed through the cut-out area (3) in the vacuum tank.

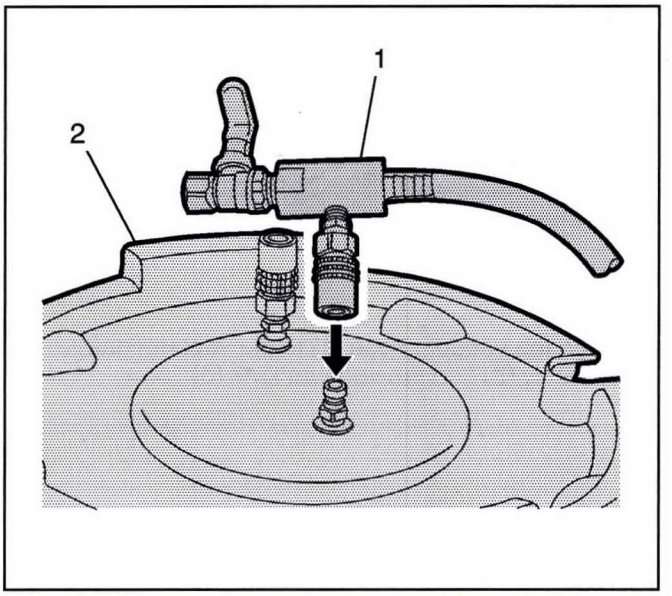

2846171

11. Attach the venturi assembly (1) to the vacuum tank (2).

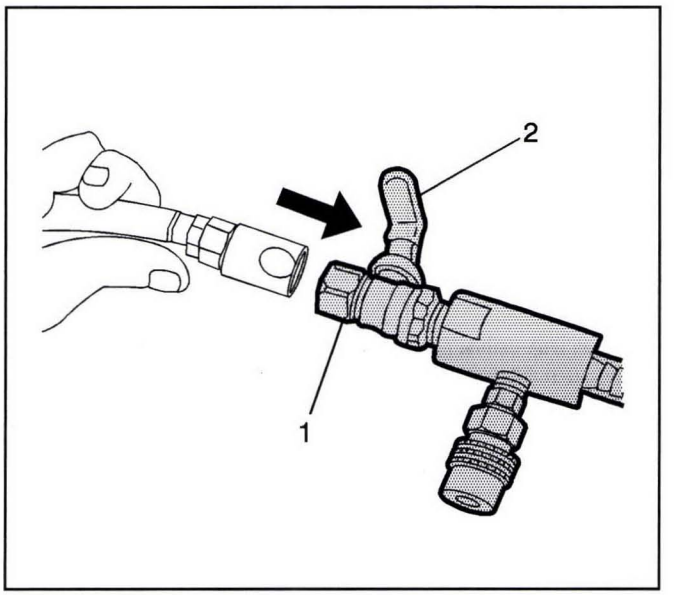

2846172

12. Attach a shop air hose to the venturi assembly (1).
    Ensure the valve (2) on the venturi assembly is closed.

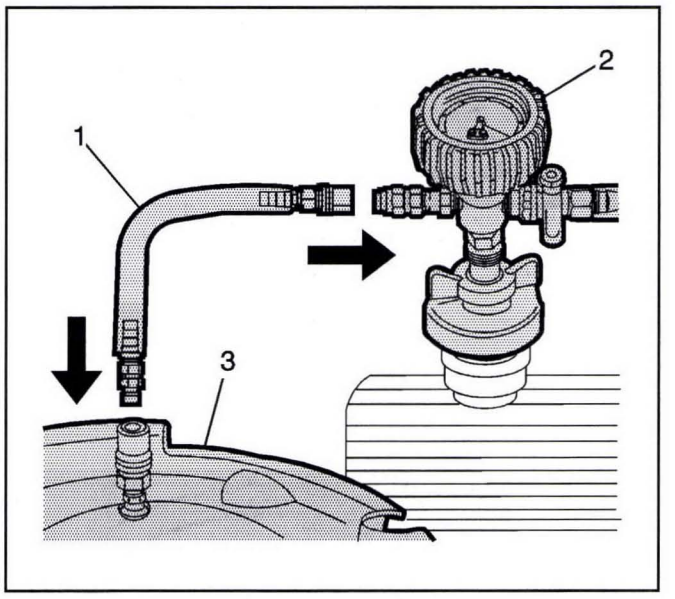

2846173

13. Attach the vacuum hose (1) to the vacuum gauge assembly (2) and the vacuum tank (3).

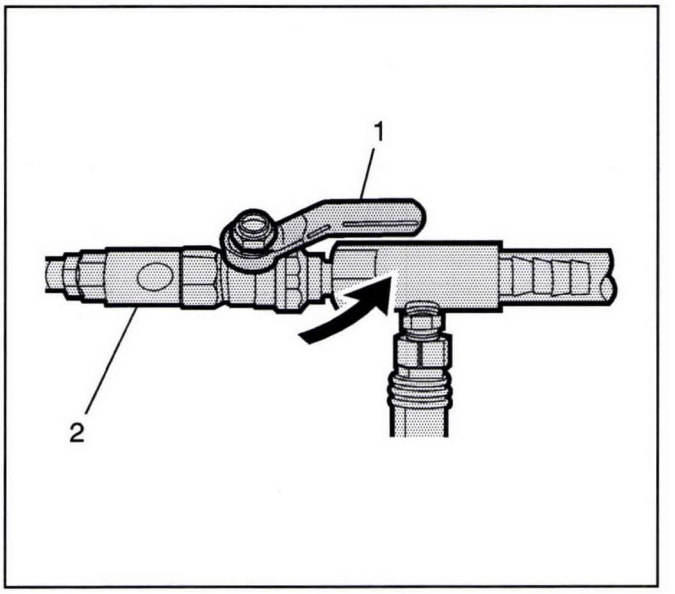

2846175

14. Open the valve (1) on the venturi assembly (2). The vacuum gauge will begin to rise and a hissing noise will be present.

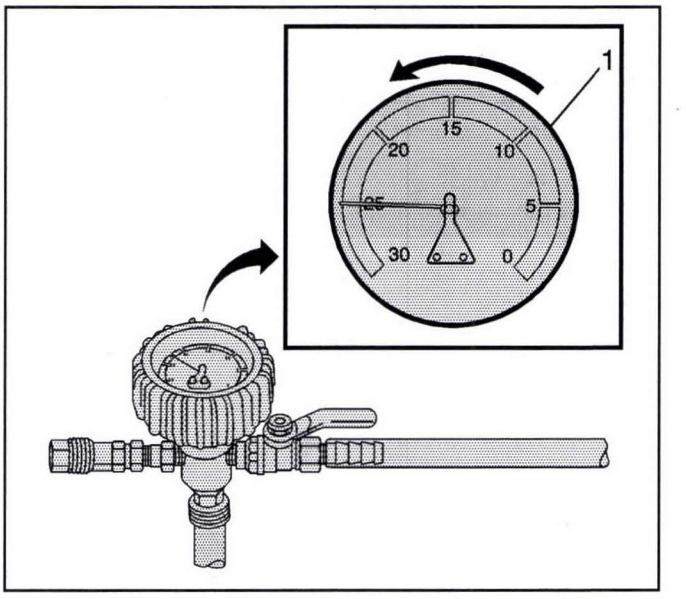

2846177

15. Continue to draw vacuum until the needle stops rising (1). This should be 610–660 mm Hg (24–26 in Hg).

    Cooling hoses may start to collapse. This is normal due to vacuum draw.

16. To aid in the fill process, position the graduated reservoir above the coolant fill port.

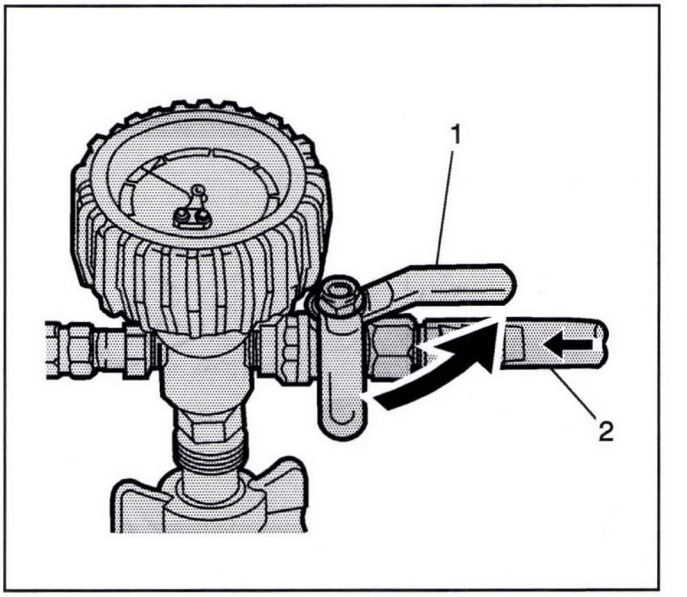

2846183

17. Slowly open the valve (1) on the vacuum gauge assembly (2). When the coolant reaches the top of the fill hose, close the valve. This will eliminate air from the fill hose.
18. Close the valve on the venturi assembly.

19. If there is a suspected leak in the cooling system, allow the system to stabilize under vacuum and monitor for vacuum loss.

    If vacuum loss is observed, refer to *Hybrid Cooling System Loss of Coolant (Drive Motor Battery Cooling System) on page 9-253* or *Hybrid Cooling System Loss of Coolant (Drive Motor Generator Power Inverter Module Cooling System) on page 9-254*.
20. Open the valve on the vacuum gauge assembly. The vacuum gauge will drop as coolant is drawn into the system.

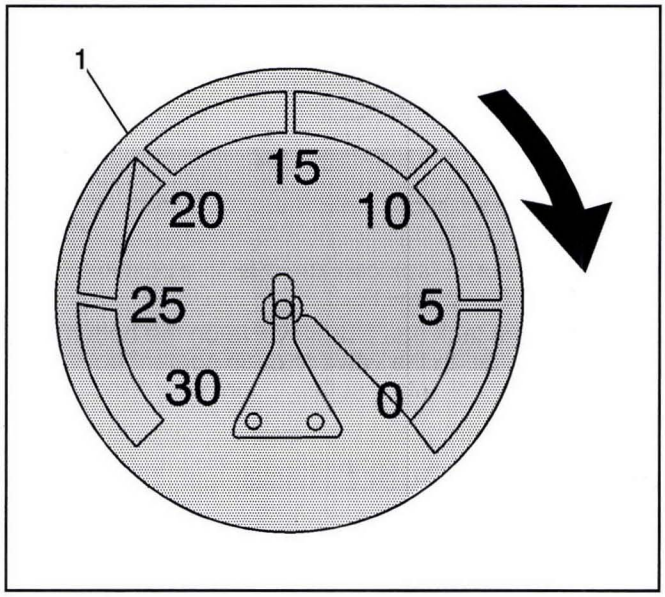

3242386

21. Once the vacuum gauge (1) reaches zero, close the valve on the vacuum gauge assembly and repeat steps 15–21 one time.
22. Detach the Vac-N-Fill cap from the *GE-46143-2* adapter.
23. Remove *GE-46143-2* adapter from the surge tank fill neck.

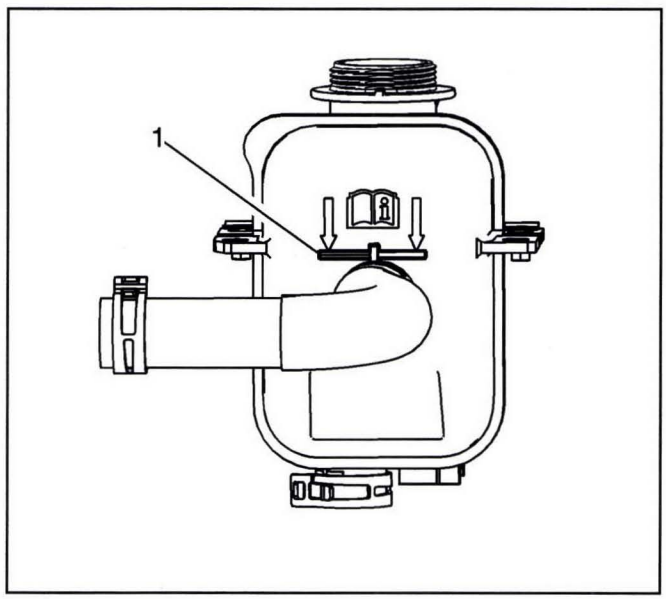

3242379

24. Adjust the surge tank coolant level to a position just above the seam (1).
25. Inspect the concentration of the coolant mixture using *GE-26568* tester.

REMOVING EXCESS COOLANT FROM SYSTEM

Note: After filling the cooling system, the extraction hose can be used to remove excess coolant to achieve the proper coolant level.

1. Detach the vacuum hose from the vacuum gauge assembly.

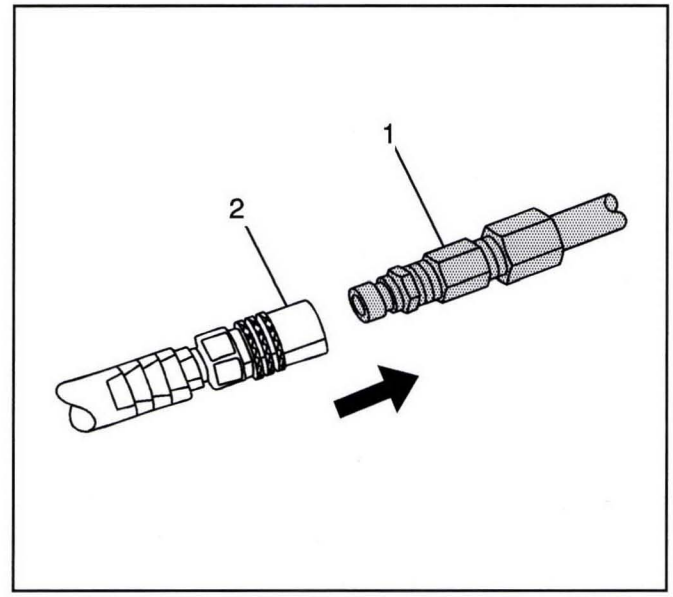

2857825

2. Attach the extraction hose (1) to the vacuum hose (2).

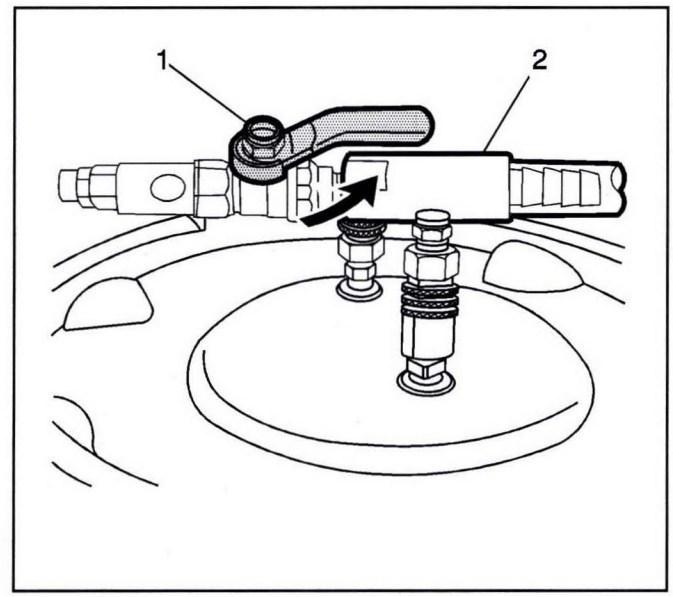

2857827

3. Open the valve (1) on the venturi assembly (2) to start a vacuum draw.

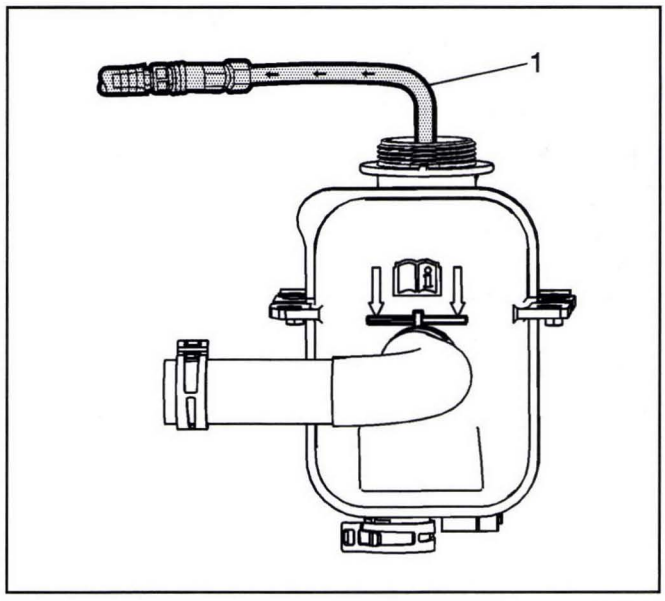

3242387

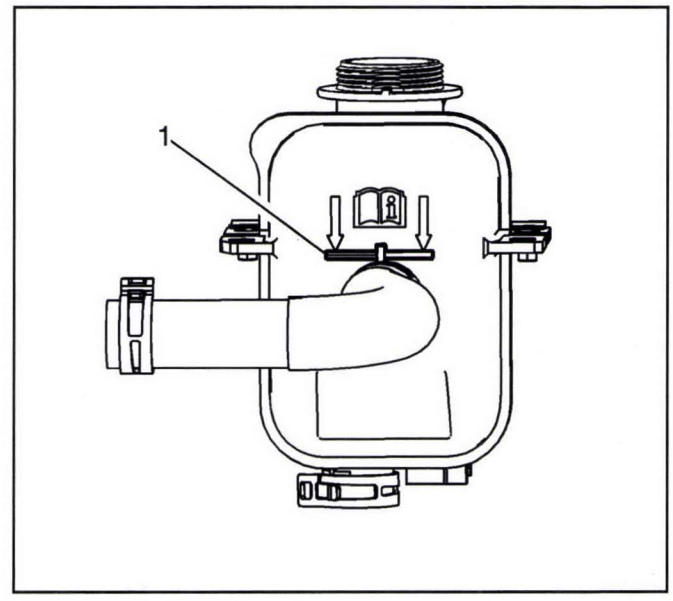

3242379

4. Assemble the extraction hose (1) and insert into the surge tank.
5. Adjust the surge tank coolant level to a position just above the seam (1).
6. The vacuum tank has a drain valve on the bottom of the tank. Open the valve to drain coolant from the vacuum tank into a suitable container for disposal.

Drive Motor Generator Power Inverter Module Cooling Outlet Hose Replacement (PE From A/Separator To Water Pump)

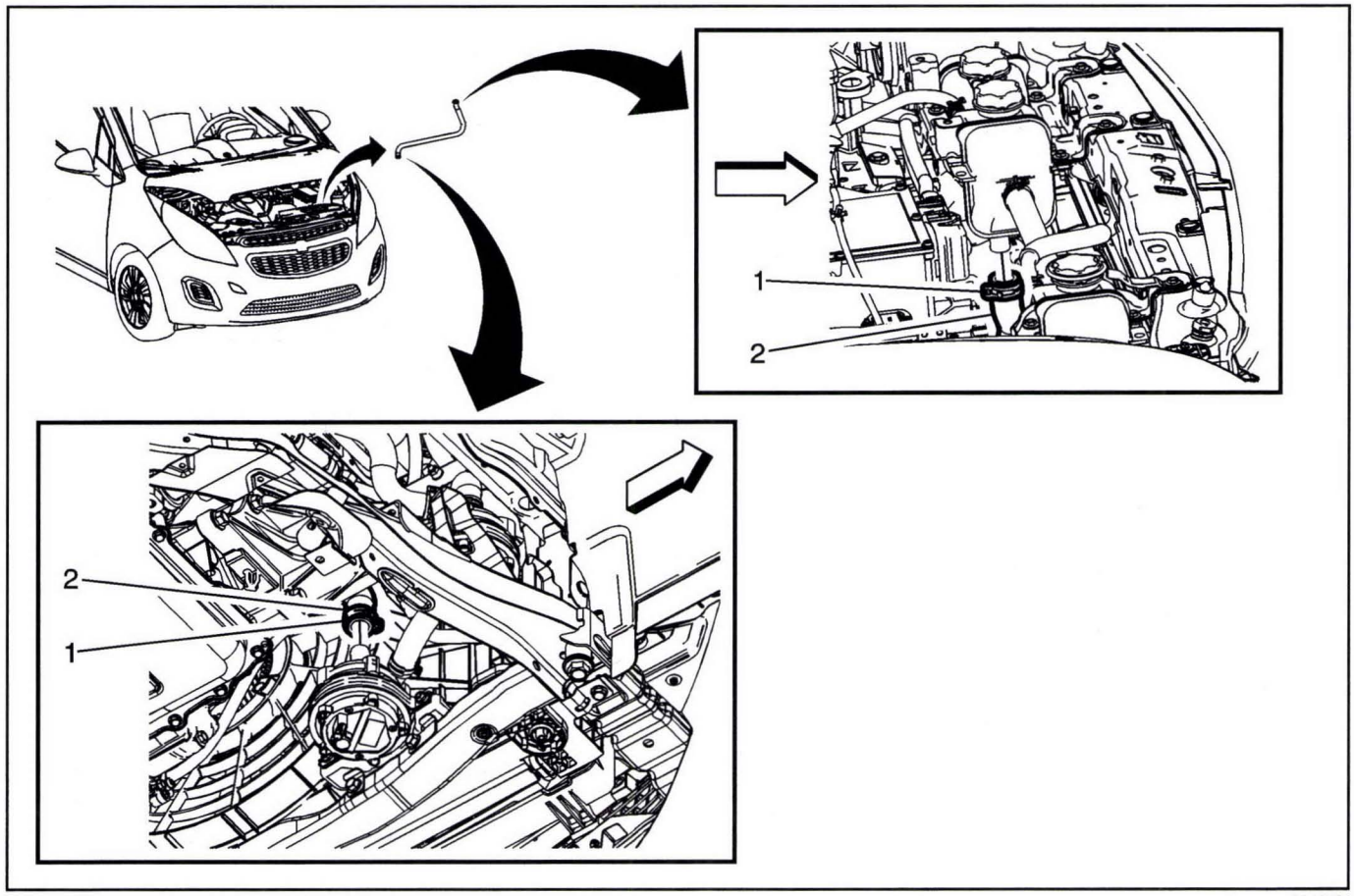

3216736

Drive Motor Generator Power Inverter Module Cooling Outlet Hose Replacement (PE From A/Separator To Water Pump)

Callout	Component Name
Danger: Before conducting any repair to this high voltage cooling system, it is necessary to determine/verify whether no high-voltage system faults exist. If high-voltage faults exist, follow published DTC diagnostics/repair procedures prior to performing any cooling system repairs. Failure to correct High Voltage Faults before working on the high voltage cooling system could result in personal injury or death. **Preliminary Procedure** 1. Turn vehicle power OFF and remove all keyless entry transmitters from the vehicle and secure in a place outside the vehicle. 2. Remove the front compartment sight shield. Refer to *Front Compartment Front Sight Shield Replacement on page 3-39*. 3. Remove the front compartment air deflector. Refer to *Front Compartment Air Deflector Replacement on page 3-125*. 4. Drain the drive motor generator power inverter module cooling system. Refer to *Drive Motor Generator Power Inverter Module Cooling System Draining and Filling on page 9-264*. 5. Remove the left side radiator surge tank clamp bracket bolts. Refer to *Radiator Surge Tank Clamp Bracket Replacement (Right Side) on page 9-279* or *Radiator Surge Tank Clamp Bracket Replacement (Left Side) on page 9-280*.	
1	Drive Motor Generator Power Inverter Module Cooling Outlet Hose Clamp (Qty: 2) **Procedure** Reposition the drive motor generator power inverter module cooling outlet hose clamps using *BO-38185* Hose Clamp Pliers. **Special Tools** *BO-38185* Hose Clamp Pliers
2	Drive Motor Generator Power Inverter Module Cooling Outlet Hose **Procedure** 1. Remove the retaining clip on the drive motor generator power inverter module cooling outlet hose from the three phase electrical wiring. 2. After installation, fill the coolant reservoir to the fill level. Refer to *Drive Motor Generator Power Inverter Module Cooling System Draining and Filling on page 9-264*. 3. Inspect cooling system for leaks.

Electric Differential Drive Motor Power Inverter Module Cooling Hose Replacement (PE TPIM to LTR)

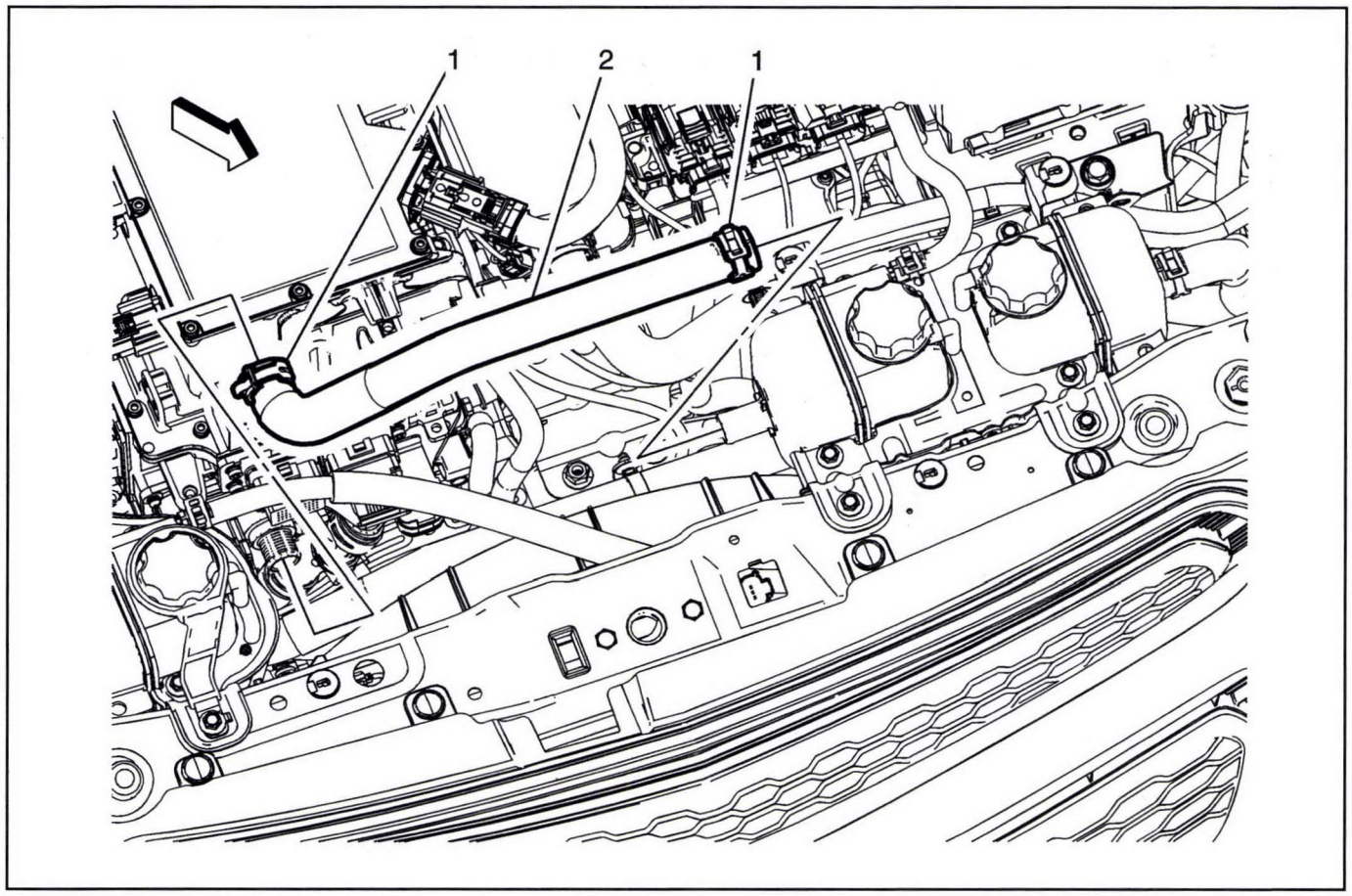

3228347

Electric Differential Drive Motor Power Inverter Module Cooling Hose Replacement (PE TPIM to LTR)

Callout	Component Name
Danger: Before conducting any repair to this high voltage cooling system, it is necessary to determine/verify whether no high-voltage system faults exist. If high-voltage faults exist, follow published DTC diagnostics/repair procedures prior to performing any cooling system repairs. Failure to correct High Voltage Faults before working on the high voltage cooling system could result in personal injury or death. **Preliminary Procedure** 1. Turn vehicle power OFF and remove all keyless entry transmitters from the vehicle and secure in a place outside the vehicle. 2. Remove the front compartment sight shield. Refer to *Front Compartment Front Sight Shield Replacement on page 3-39*. 3. Drain the drive motor generator power inverter module cooling system. Refer to *Drive Motor Generator Power Inverter Module Cooling System Draining and Filling on page 9-264*.	
1	Electric Differential Drive Motor Power Inverter Module Cooling Hose Clamp (Qty: 2) **Procedure** Reposition the electric differential drive motor power inverter module cooling hose clamps using *BO-38185* Hose Clamp Pliers. **Special Tools** *BO-38185* Hose Clamp Pliers
2	Electric Differential Drive Motor Power Inverter Module Cooling Hose **Procedure** 1. After installation, fill the coolant reservoir to the fill level. Refer to *Drive Motor Generator Power Inverter Module Cooling System Draining and Filling on page 9-264*. 2. Inspect cooling system for leaks.

Coolant Temperature Sensor Replacement (Assembly)

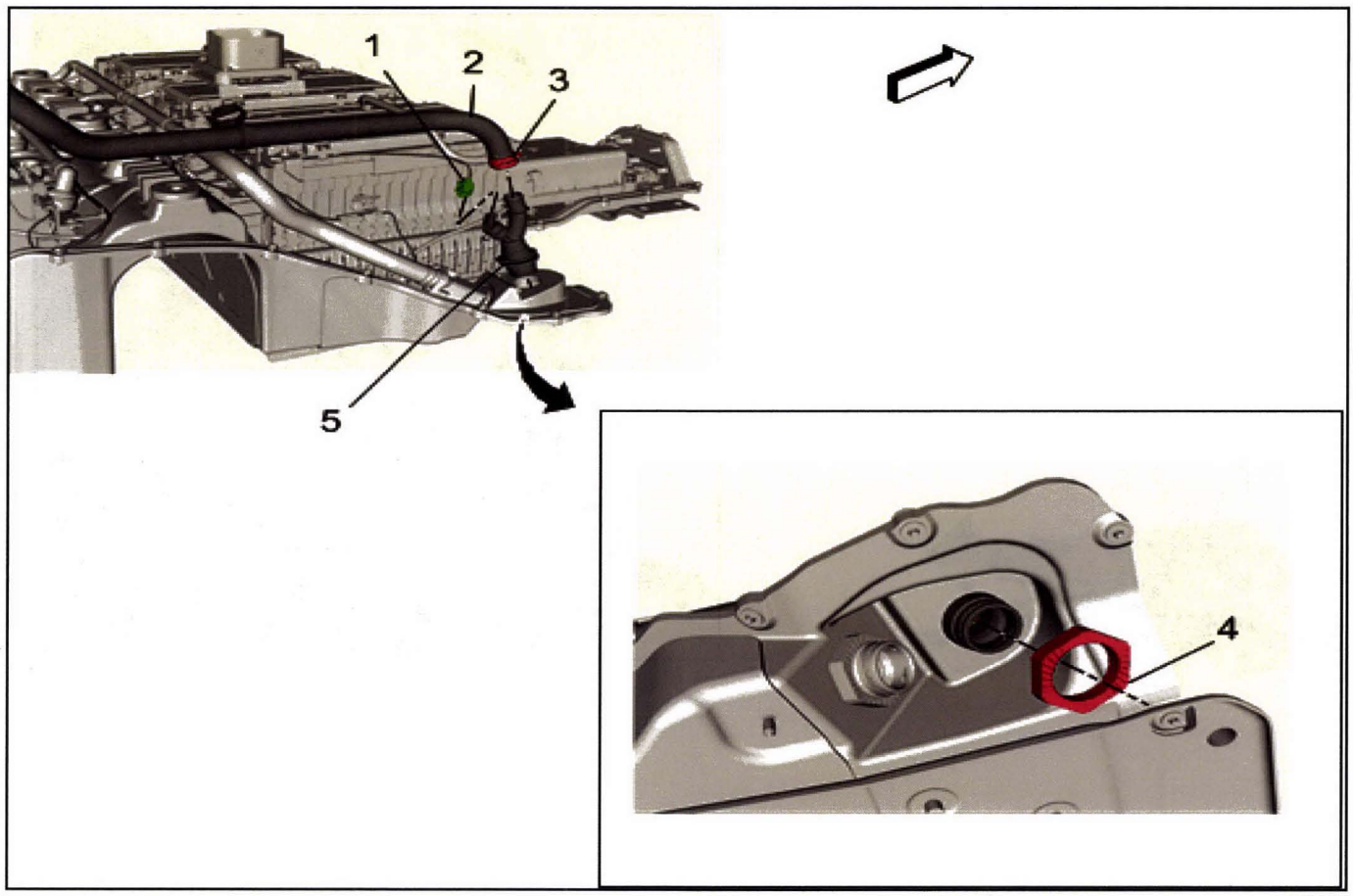

3714427

Coolant Temperature Sensor Replacement (Assembly)

Callout	Component Name
Danger: Ensure all High Voltage safety procedures are followed. Failure to follow the procedure exactly as written may result in serious injury or death. ***Danger: Before working on any high voltage system, be sure to wear the following Personal Protection Equipment:*** • ***Safety glasses with appropriate side shields when within 50 feet of the vehicle, either indoors or outdoors*** • ***Certified and up-to-date Class "0" Insulation gloves rated at 1000V with leather protectors*** – ***Visually and functionally inspect the gloves before use.*** – ***Wear the Insulation gloves at all times when working with the high voltage battery assembly, whether the system is energized or not.*** ***Failure to follow the procedure exactly as written may result in serious injury or death.*** **Preliminary Procedure** 1. Remove the drive motor battery. Refer to *Drive Motor Battery Replacement and Shipping Preparation on page 9-524*. 2. Remove the drive motor battery cover. Refer to *Drive Motor Battery Cover Replacement on page 9-449*. **Special Tools** *BO-38185* Hose Clamp Pliers For equivalent regional tools, refer to *Special Tools on page 10-77*.	
1	Drive Motor Battery Coolant Temperature Connector
2	Cell Battery Cooling Manifold Outlet Hose
3	Cell Battery Cooling Manifold Outlet Hose Clamp
4	Coolant Temperature Sensor Assembly Fastener **Caution:** Refer to *Fastener Caution on page 0-8*. **Tighten** 27 N•m (20 lb ft)
5	Coolant Temperature Sensor Assembly

Coolant Temperature Sensor Replacement (Heater Assembly)

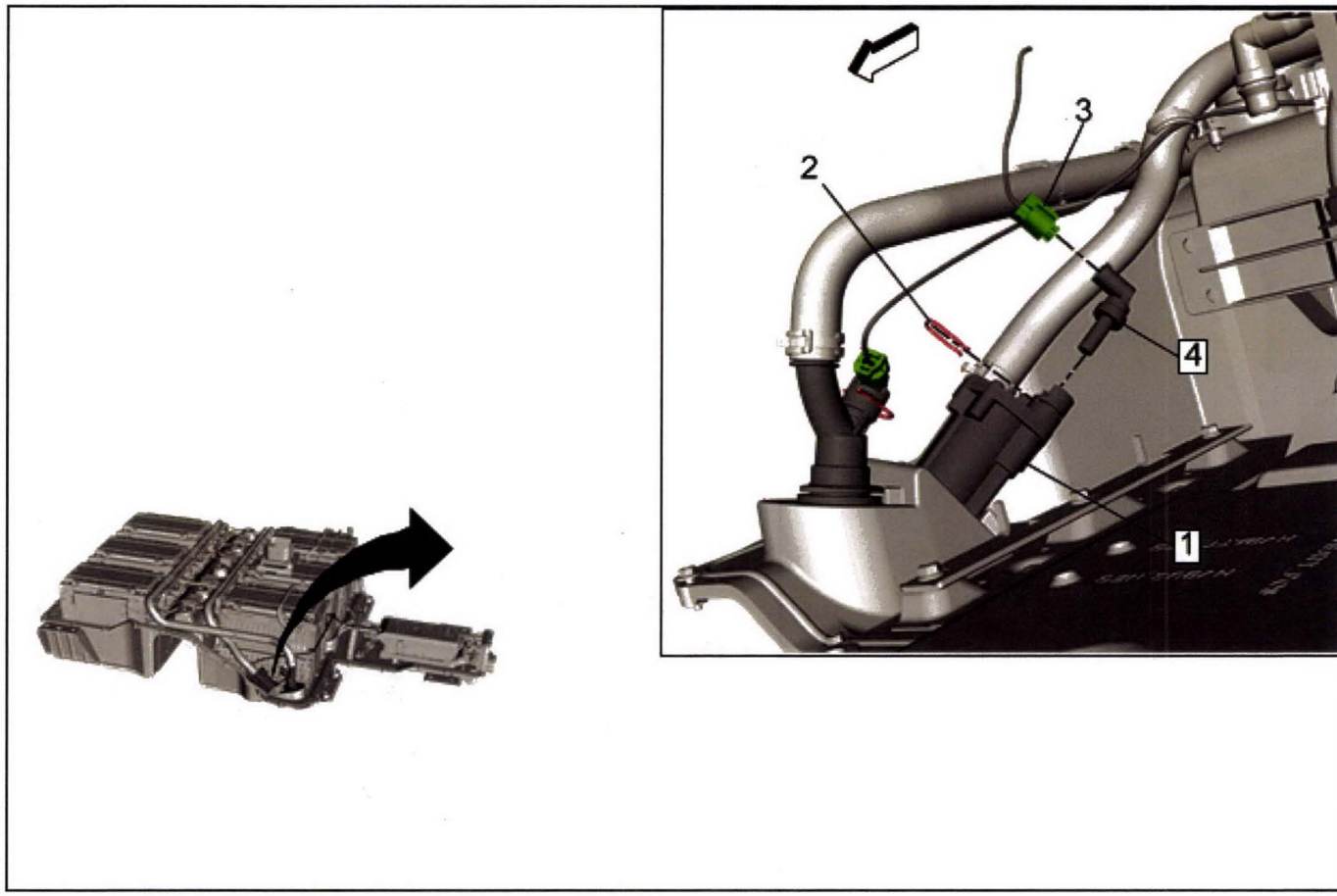

3950241

Coolant Temperature Sensor Replacement (Heater Assembly)

Callout	Component Name
Danger: Ensure all High Voltage safety procedures are followed. Failure to follow the procedure exactly as written may result in serious injury or death.	
Danger: Before working on any high voltage system, be sure to wear the following Personal Protection Equipment: • ***Safety glasses with appropriate side shields when within 50 feet of the vehicle, either indoors or outdoors*** • ***Certified and up-to-date Class "0" Insulation gloves rated at 1000V with leather protectors*** – ***Visually and functionally inspect the gloves before use.*** – ***Wear the Insulation gloves at all times when working with the high voltage battery assembly, whether the system is energized or not.*** ***Failure to follow the procedure exactly as written may result in serious injury or death.*** **Preliminary Procedure** 1. Remove the drive motor battery. Refer to *Drive Motor Battery Replacement and Shipping Preparation on page 9-524*. 2. Remove the drive motor battery cover. Refer to *Drive Motor Battery Cover Replacement on page 9-449*.	
1	Heater Assembly
2	Coolant Temperature Sensor Retaining Clip
3	Coolant Temperature Sensor Connector
4	Coolant Temperature Sensor

Coolant Temperature Sensor Replacement (Coolant Temperature Assembly Sensor)

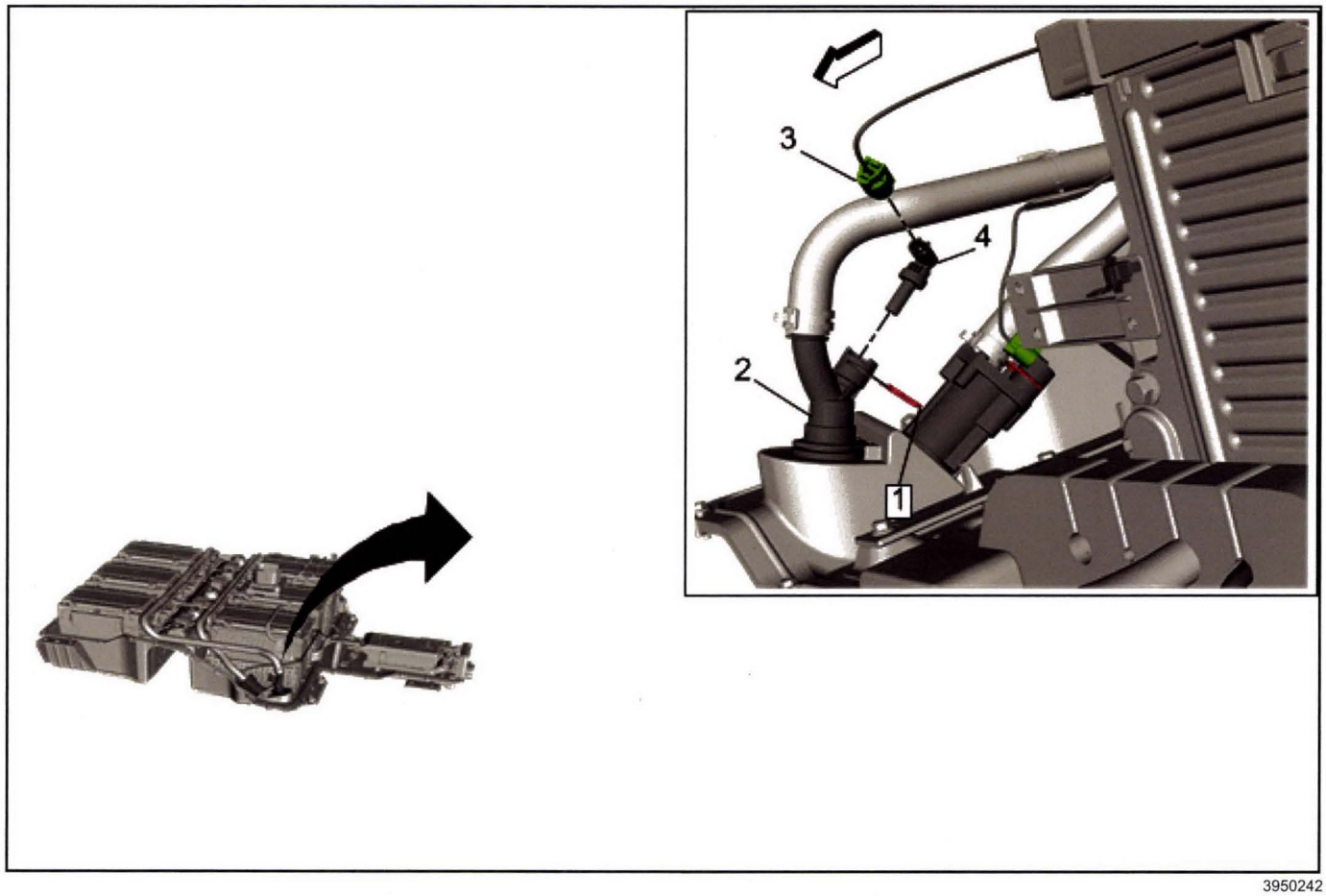

3950242

Coolant Temperature Sensor Replacement (Coolant Temperature Assembly Sensor)

Callout	Component Name
Danger: Ensure all High Voltage safety procedures are followed. Failure to follow the procedure exactly as written may result in serious injury or death.	
Danger: Before working on any high voltage system, be sure to wear the following Personal Protection Equipment: • ***Safety glasses with appropriate side shields when within 50 feet of the vehicle, either indoors or outdoors*** • ***Certified and up-to-date Class "0" Insulation gloves rated at 1000V with leather protectors*** – ***Visually and functionally inspect the gloves before use.*** – ***Wear the Insulation gloves at all times when working with the high voltage battery assembly, whether the system is energized or not.*** ***Failure to follow the procedure exactly as written may result in serious injury or death.*** **Preliminary Procedure** 1. Remove the drive motor battery. Refer to *Drive Motor Battery Replacement and Shipping Preparation on page 9-524*. 2. Remove the drive motor battery cover. Refer to *Drive Motor Battery Cover Replacement on page 9-449*.	
1	Coolant Temperature Sensor Retaining Clip
2	Coolant Temperature Sensor Assembly
3	Coolant Temperature Sensor Connector
4	Coolant Temperature Sensor

Drive Motor Battery Coolant Level Sensor Replacement

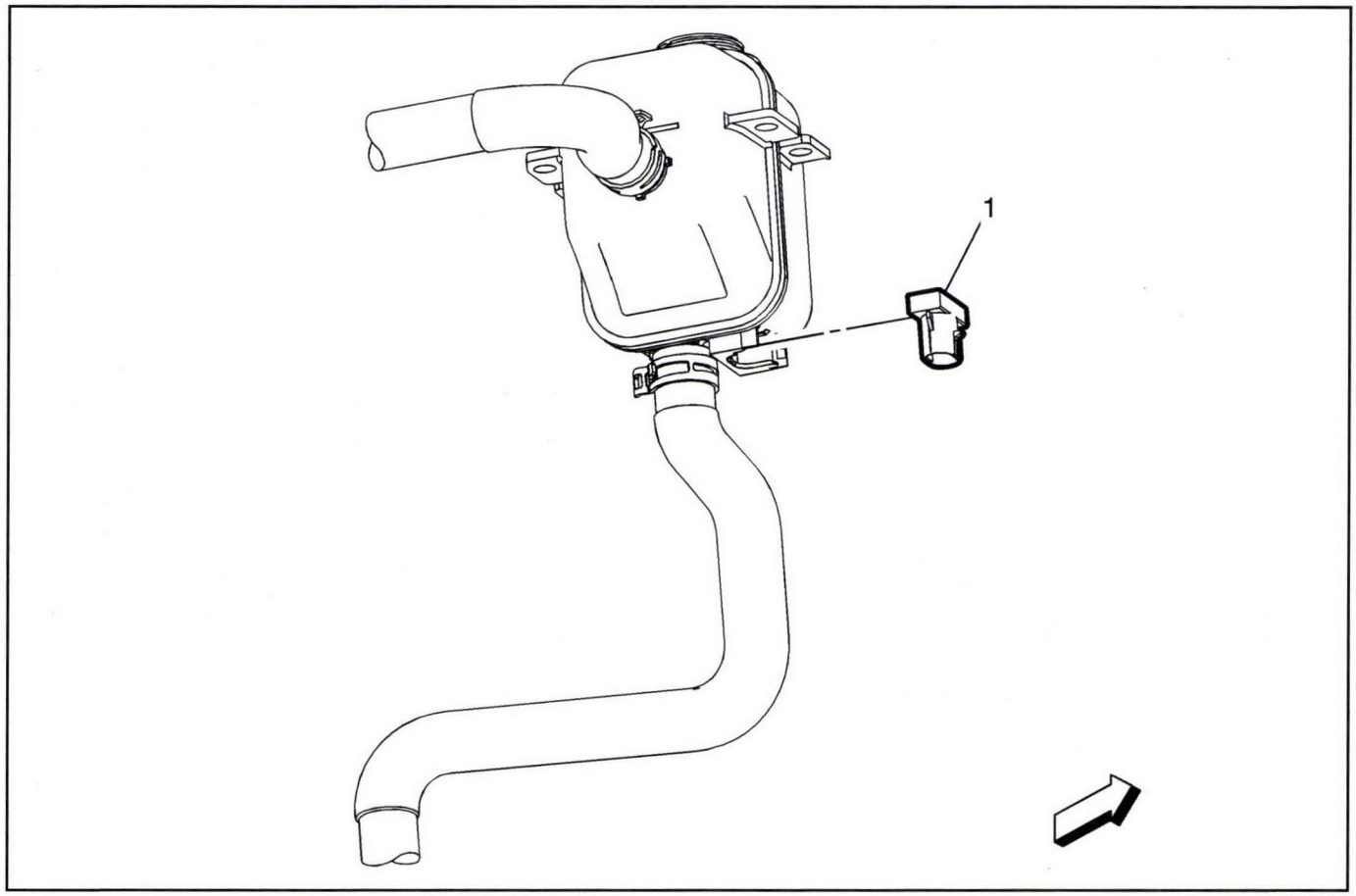

3226546

Drive Motor Battery Coolant Level Sensor Replacement

Callout	Component Name
Preliminary Procedures 1. Remove the front compartment sight shield. Refer to *Front Compartment Front Sight Shield Replacement on page 3-39*. 2. Disconnect the electrical connector from the coolant level sensor.	
1	Drive Motor Battery Coolant Level Sensor

Auxiliary Radiator Replacement

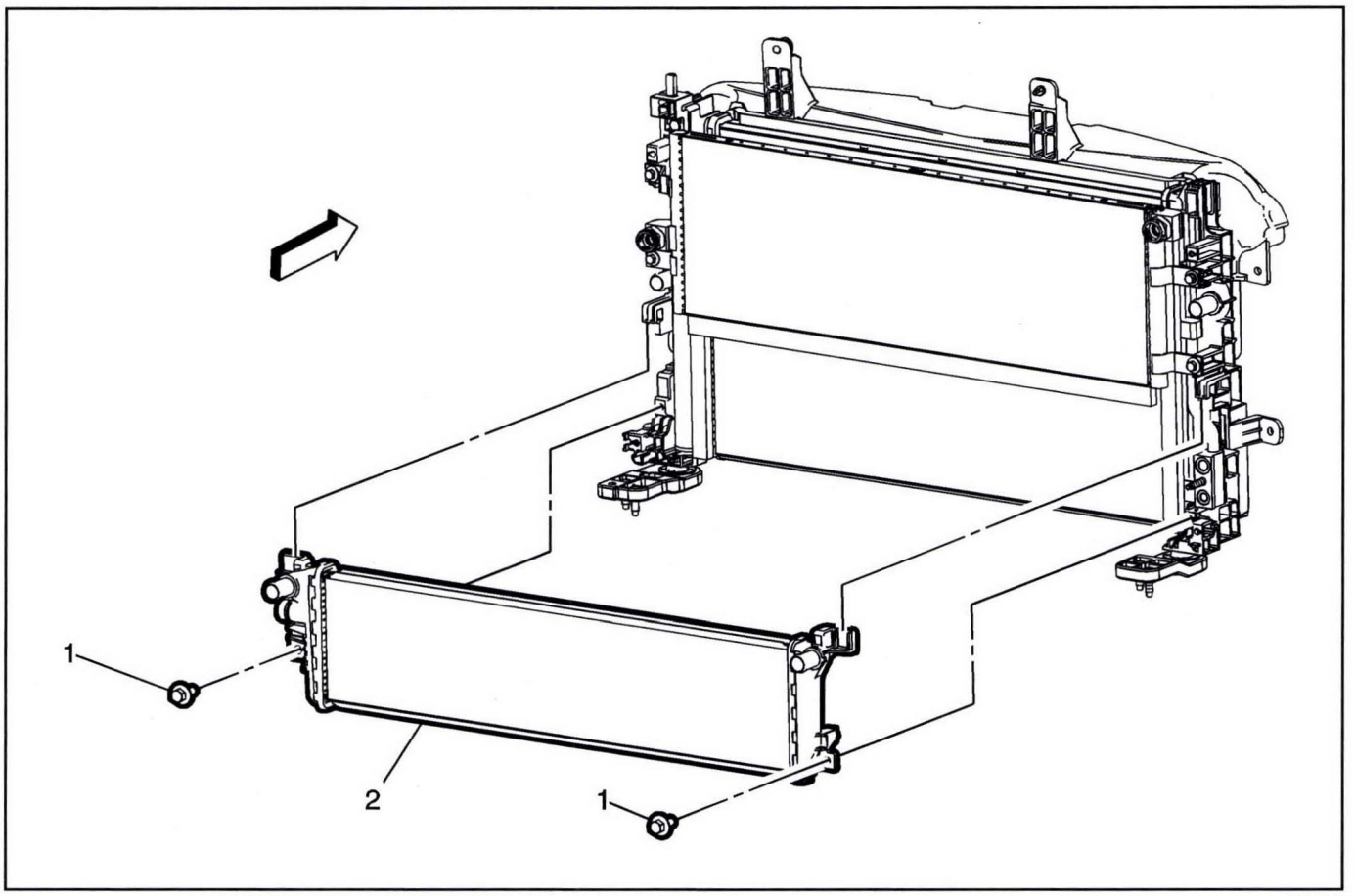

3227411

Auxiliary Radiator Replacement

Callout	Component Name
Danger: Before conducting any repair to this high voltage cooling system, it is necessary to determine/verify whether no high-voltage system faults exist. If high-voltage faults exist, follow published DTC diagnostics/repair procedures prior to performing any cooling system repairs. Failure to correct High Voltage Faults before working on the high voltage cooling system could result in personal injury or death.	**Preliminary Procedures** 1. Turn vehicle power OFF and remove all keyless entry transmitters from the vehicle and secure in a place outside the vehicle. 2. Remove the engine coolant fan shroud from the vehicle. Refer to *Cooling Fan and Shroud Replacement on page 9-283*. 3. Disconnect the electrical connector from the coolant temperature sensor.
1	Auxiliary Radiator Bolt (Qty: 2) **Caution:** Refer to *Fastener Caution on page 0-8*. **Tighten** 6 N•m (53 lb in)
2	Auxiliary Radiator **Procedure** 1. Fill the coolant to the proper level. 2. Check the cooling system for leaks.

Radiator Surge Tank Replacement (Reserve Energy Supply System Reservoir)

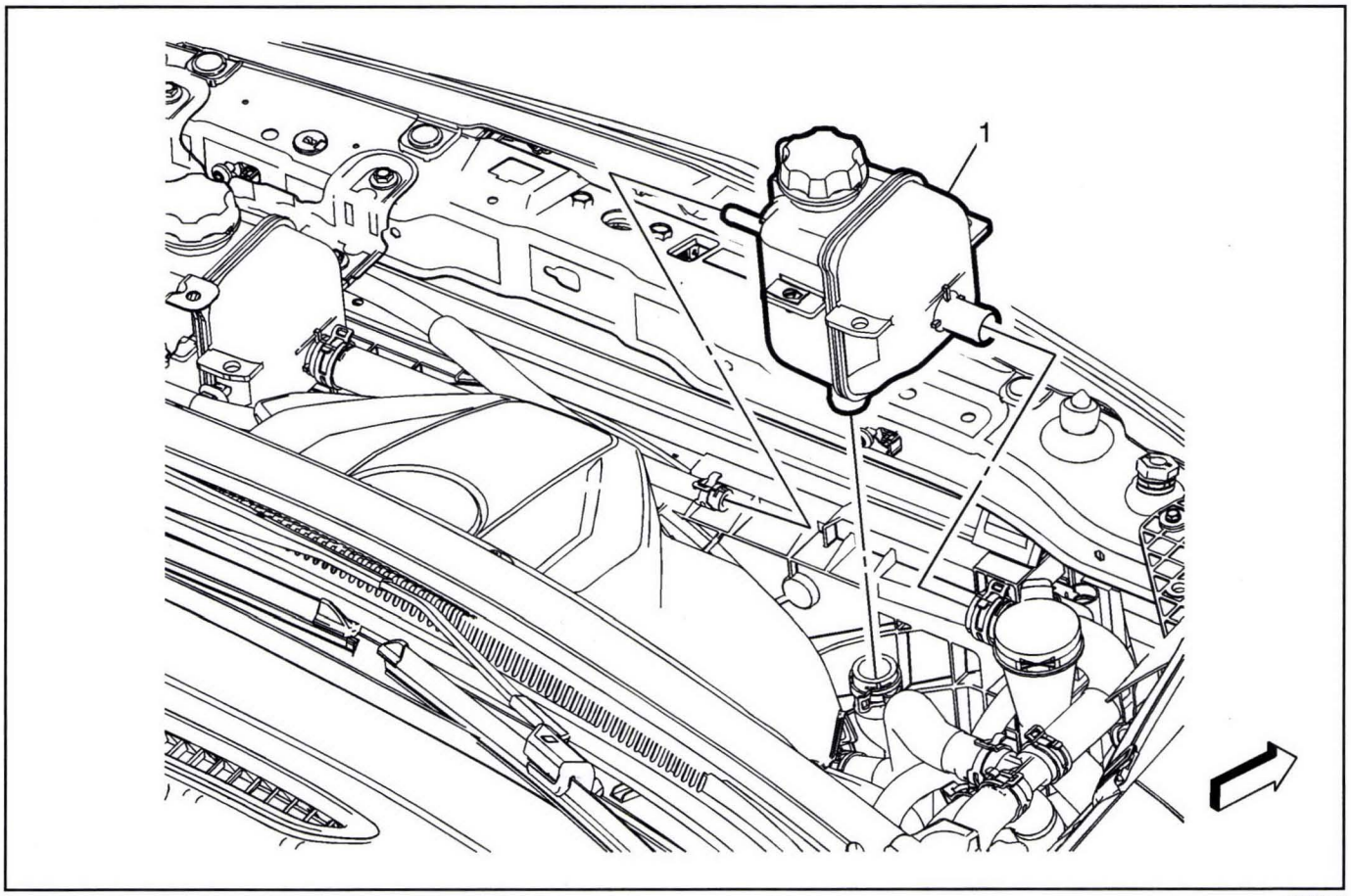

3212514

Radiator Surge Tank Replacement (Reserve Energy Supply System Reservoir)

Callout	Component Name
Danger: Before conducting any repair to this high voltage cooling system, it is necessary to determine/verify whether no high-voltage system faults exist. If high-voltage faults exist, follow published DTC diagnostics/repair procedures prior to performing any cooling system repairs. Failure to correct High Voltage Faults before working on the high voltage cooling system could result in personal injury or death.	
	Preliminary Procedure 1. Turn vehicle power OFF and remove all keyless entry transmitters from the vehicle and secure in a place outside the vehicle. 2. Drain the Battery cooling system. Refer to *Drive Motor Battery Cooling System Draining and Filling on page 9-257*. 3. Remove the radiator surge tank clamp bracket. Refer to *Radiator Surge Tank Clamp Bracket Replacement (Right Side) on page 9-279* or *Radiator Surge Tank Clamp Bracket Replacement (Left Side) on page 9-280*. 4. Remove the radiator overflow hose from the radiator surge tank. Refer to *Radiator Overflow Hose Replacement on page 9-282*. 5. Remove the RESS from radiator outlet to a/separator drive motor battery radiator inlet hose from the radiator surge tank. Refer to *Drive Motor Battery Radiator Inlet Hose Replacement (RESS From Radiator Outlet to A/Separator) on page 9-329* or *Drive Motor Battery Radiator Inlet Hose Replacement (RESS From A/Separator To Water Pump) on page 9-331* or *Drive Motor Battery Radiator Inlet Hose Replacement (RESS From Radiator Outlet Tee To A/Separator) on page 9-332*. 6. Remove the RESS from a/separator to water pump drive motor battery radiator inlet hose from the radiator surge tank. Refer to *Drive Motor Battery Radiator Inlet Hose Replacement (RESS From Radiator Outlet to A/Separator) on page 9-329* or *Drive Motor Battery Radiator Inlet Hose Replacement (RESS From A/Separator To Water Pump) on page 9-331* or *Drive Motor Battery Radiator Inlet Hose Replacement (RESS From Radiator Outlet Tee To A/Separator) on page 9-332*. 7. Remove the drive motor battery coolant level sensor from the surge tank. Refer to *Drive Motor Battery Coolant Level Sensor Replacement on page 9-274*.
1	Radiator Surge Tank **Procedure** 1. After installation, fill the coolant reservoir to the fill level. Refer to *Drive Motor Battery Cooling System Draining and Filling on page 9-257*. 2. Inspect cooling system for leaks.

Radiator Surge Tank Replacement (Power Energy Reservoir)

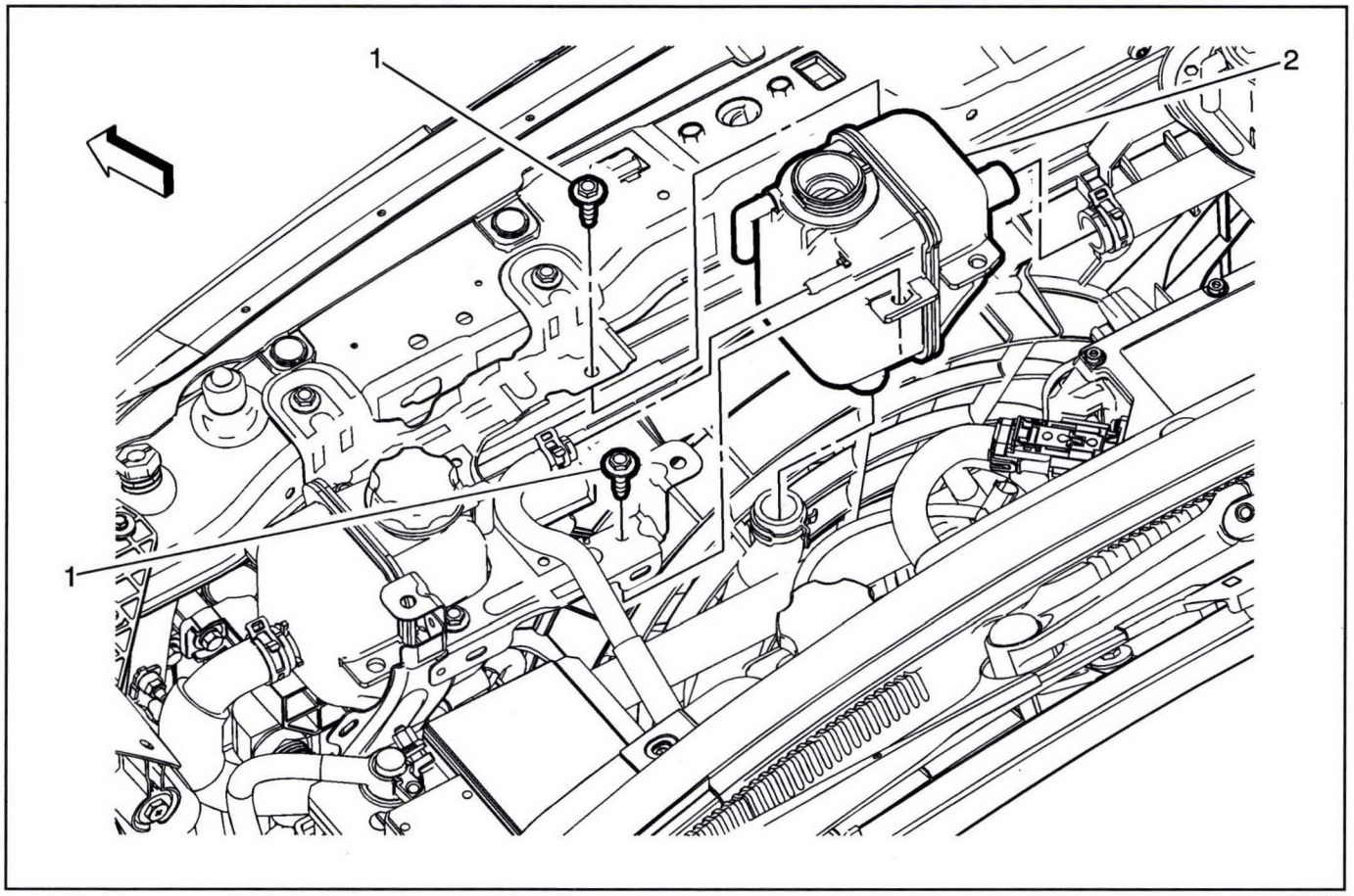

3217502

Radiator Surge Tank Replacement (Power Energy Reservoir)

Callout	Component Name
	Danger: Before conducting any repair to this high voltage cooling system, it is necessary to determine/verify whether no high-voltage system faults exist. If high-voltage faults exist, follow published DTC diagnostics/repair procedures prior to performing any cooling system repairs. Failure to correct High Voltage Faults before working on the high voltage cooling system could result in personal injury or death. **Preliminary Procedure** 1. Turn vehicle power OFF and remove all keyless entry transmitters from the vehicle and secure in a place outside the vehicle. 2. Remove the front compartment front sight shield. Refer to *Front Compartment Front Sight Shield Replacement on page 3-39*. 3. Drain the drive motor generator power inverter module cooling system cooling system. Refer to *Drive Motor Generator Power Inverter Module Cooling System Draining and Filling on page 9-264*. 4. Remove the radiator surge tank clamp bracket bolts. Refer to *Radiator Surge Tank Clamp Bracket Replacement (Right Side) on page 9-279* or *Radiator Surge Tank Clamp Bracket Replacement (Left Side) on page 9-280*. 5. Remove the drive motor generator control module cooling outlet hose from the coolant expansion tank. Refer to *Drive Motor Generator Control Module Cooling Outlet Hose Replacement (Auxiliary Radiator to Drive Motor Battery Charger) on page 9-292* or *Drive Motor Generator Control Module Cooling Outlet Hose Replacement (Long Hose) on page 9-293* or *Drive Motor Generator Control Module Cooling Outlet Hose Replacement (Two Bending) on page 9-294* or *Drive Motor Generator Control Module Cooling Outlet Hose Replacement (Straight Hose) on page 9-296*. 6. Remove the electric differential drive motor power inverter module cooling hose from the coolant expansion tank. Refer to *Electric Differential Drive Motor Power Inverter Module Cooling Hose Replacement (PE TPIM to LTR) on page 9-270*. 7. Remove the drive motor generator power inverter module cooling outlet hose from the coolant expansion tank. Refer to *Drive Motor Generator Power Inverter Module Cooling Outlet Hose Replacement (PE From A/Separator To Water Pump) on page 9-268*.
1	Radiator Surge Tank Bolt (Qty: 2) **Caution:** Refer to *Fastener Caution on page 0-8*. **Tighten** 9 N•m (80 lb in)

Radiator Surge Tank Replacement (Power Energy Reservoir) (cont'd)

Callout	Component Name
2	Radiator Surge Tank **Procedure** 1. After installation, fill the radiator surge tank to the fill level. Refer to *Drive Motor Generator Power Inverter Module Cooling System Draining and Filling on page 9-264*. 2. Inspect cooling system for leaks.

Radiator Surge Tank Replacement (Heater Reservoir)

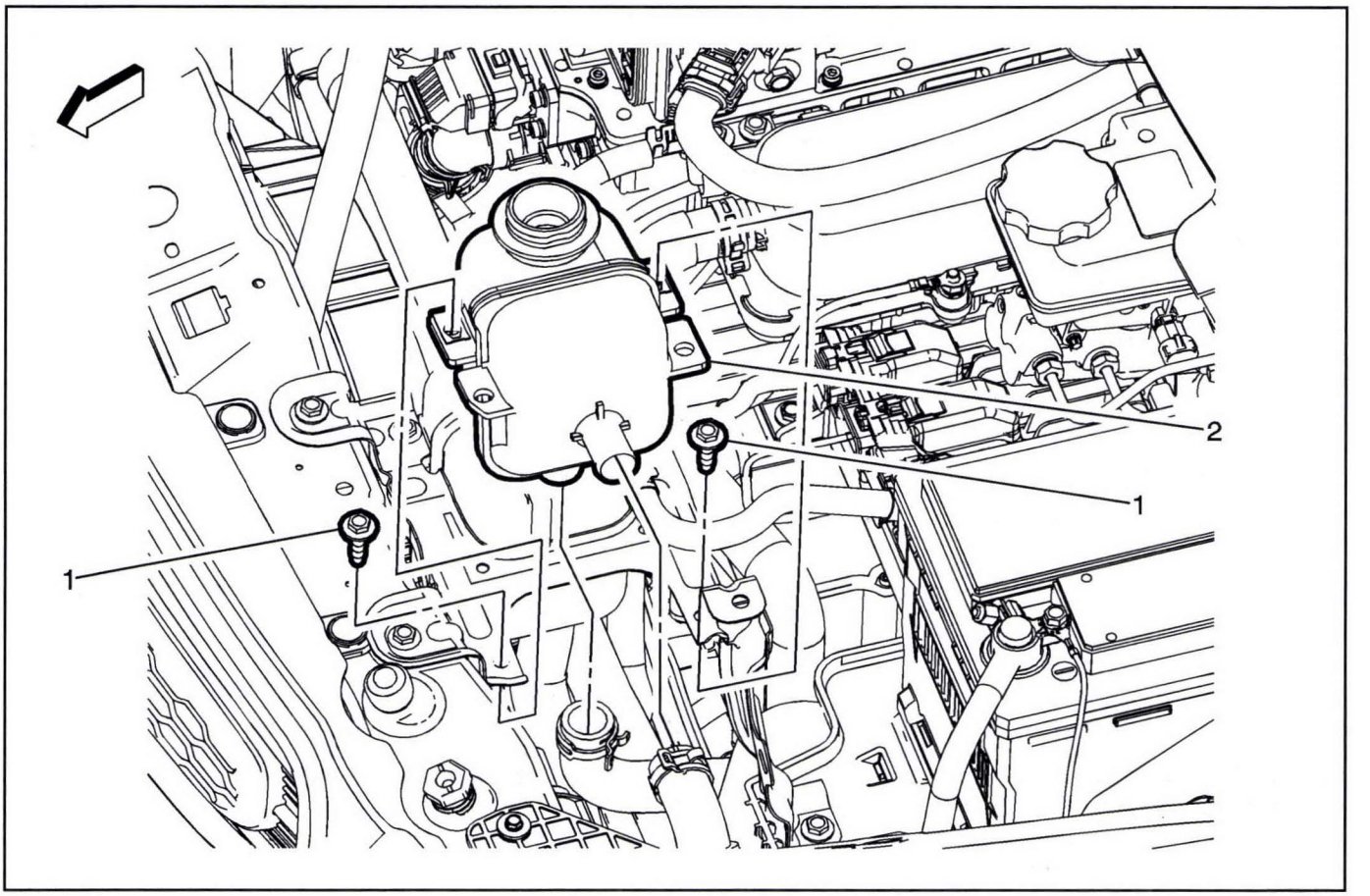

3217509

Radiator Surge Tank Replacement (Heater Reservoir)

Callout	Component Name
	Danger: Before conducting any repair to this high voltage cooling system, it is necessary to determine/verify whether no high-voltage system faults exist. If high-voltage faults exist, follow published DTC diagnostics/repair procedures prior to performing any cooling system repairs. Failure to correct High Voltage Faults before working on the high voltage cooling system could result in personal injury or death.
	Preliminary Procedure
	1. Turn vehicle power OFF and remove all keyless entry transmitters from the vehicle and secure in a place outside the vehicle. 2. Remove the front compartment sight shield. Refer to *Front Compartment Front Sight Shield Replacement on page 3-39*. 3. Drain the heater coolant cooling system. Refer to *Heater Coolant Heater Draining and Filling on page 10-21*. 4. Remove the radiator surge tank clamp bracket bolts. Refer to *Radiator Surge Tank Clamp Bracket Replacement (Right Side) on page 9-279* or *Radiator Surge Tank Clamp Bracket Replacement (Left Side) on page 9-280*. 5. Remove the Heater Outlet Hose from the radiator surge tank. Refer to *Heater Outlet Hose Replacement on page 10-54*. 6. Remove the Heater Inlet Hose from the radiator surge tank. Refer to *Heater Inlet Hose Replacement on page 10-50*.

Radiator Surge Tank Replacement (Heater Reservoir) (cont'd)

Callout	Component Name
1	Radiator Surge Tank Bolt (Qty: 2) **Caution:** Refer to *Fastener Caution on page 0-8.* **Tighten** 9 N•m (80 lb in)
2	Radiator Surge Tank **Procedure** 1. After installation, fill the radiator surge tank to the fill level. Refer to *Heater Coolant Heater Draining and Filling on page 10-21.* 2. Inspect cooling system for leaks.

Radiator Surge Tank Clamp Bracket Replacement (Right Side)

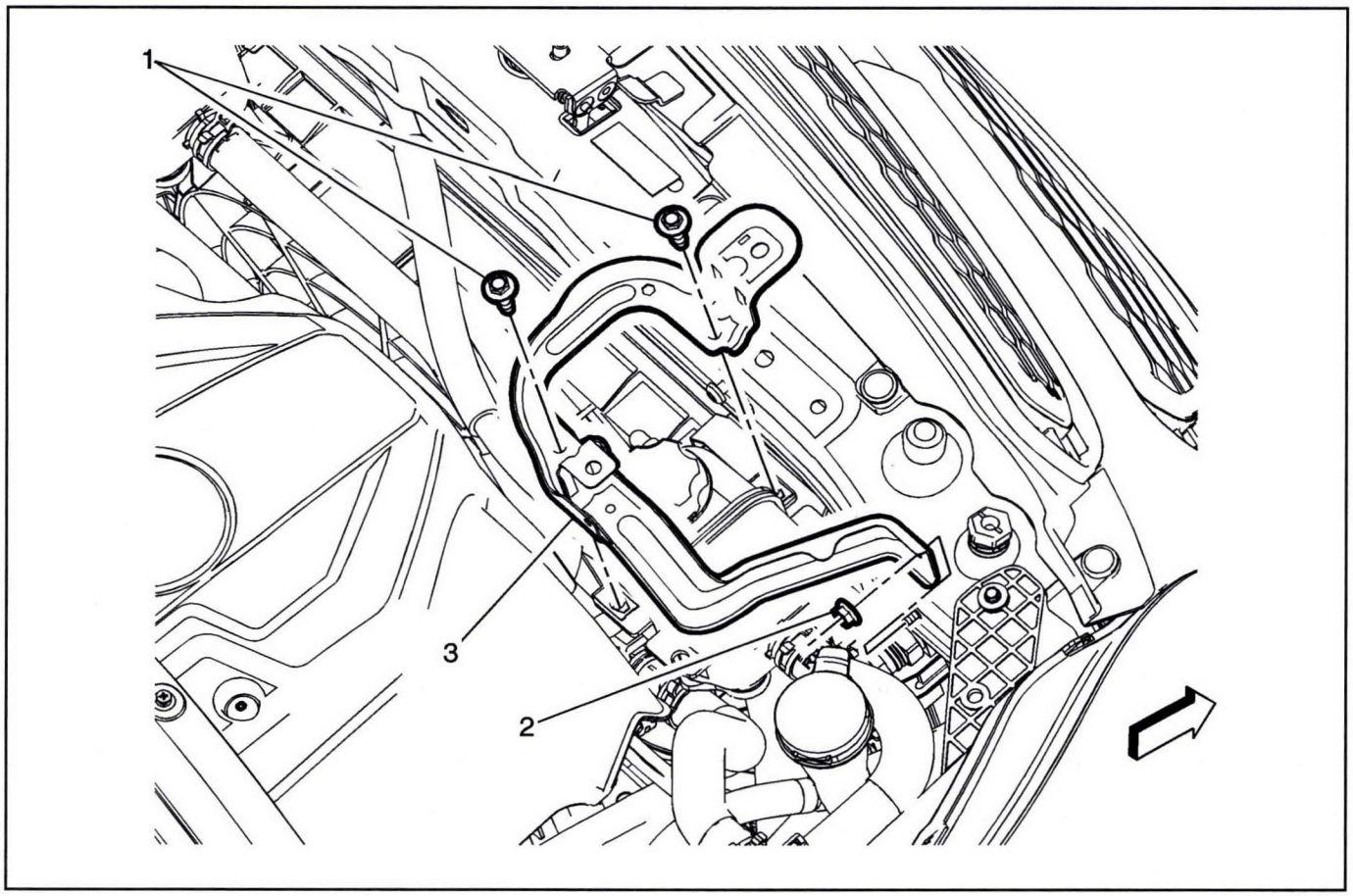

3212394

Radiator Surge Tank Clamp Bracket Replacement (Right Side)

Callout	Component Name
Preliminary Procedure Remove the radiator surge tank support bracket. Refer to *Radiator Surge Tank Support Bracket Replacement on page 9-281.*	
1	Radiator Surge Tank Clamp Bracket Bolt (Qty: 2) **Caution:** Refer to *Fastener Caution on page 0-8.* **Tighten** 9 N•m (80 lb in)
2	Radiator Surge Tank Clamp Bracket Nut **Tighten** 9 N•m (80 lb in)

Radiator Surge Tank Clamp Bracket Replacement (Right Side) (cont'd)

Callout	Component Name
3	Radiator Surge Tank Clamp Bracket

Radiator Surge Tank Clamp Bracket Replacement (Left Side)

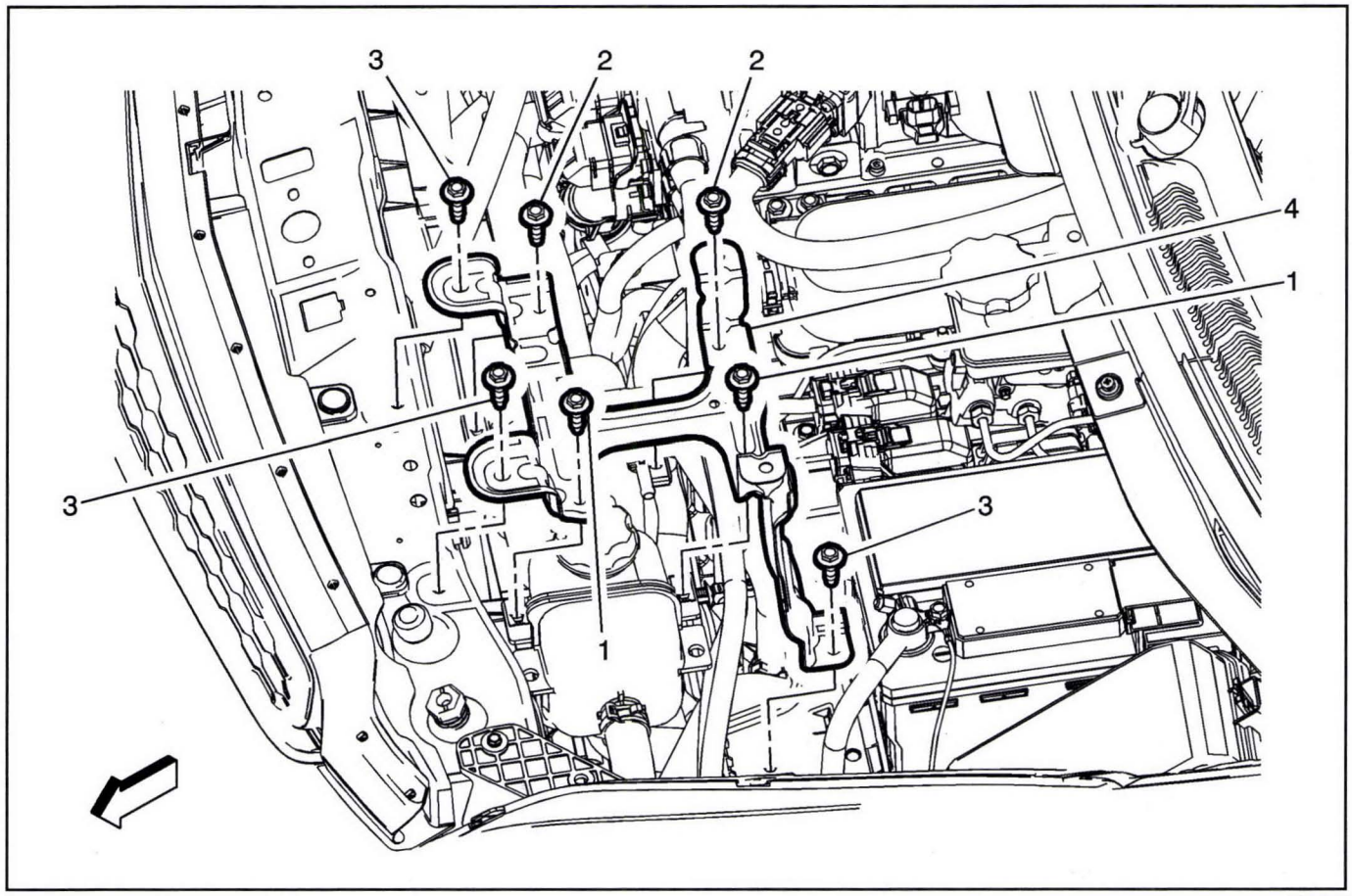

3217470

Radiator Surge Tank Clamp Bracket Replacement (Left Side)

Callout	Component Name
	Danger: Before conducting any repair to this high voltage cooling system, it is necessary to determine/verify whether no high-voltage system faults exist. If high-voltage faults exist, follow published DTC diagnostics/repair procedures prior to performing any cooling system repairs. Failure to correct High Voltage Faults before working on the high voltage cooling system could result in personal injury or death.
	Preliminary Procedure 1. Turn vehicle power OFF and remove all keyless entry transmitters from the vehicle and secure in a place outside the vehicle. 2. Remove the front compartment sight shield. Refer to *Front Compartment Front Sight Shield Replacement on page 3-39*.
1	Radiator Surge Tank Bolt (Qty: 2) **Caution:** Refer to *Fastener Caution on page 0-8*. **Tighten** 9 N•m (80 lb in)
2	Coolant Recovery Expansion Tank Bolt (Qty: 2) **Tighten** 9 N•m (80 lb in)
3	Radiator Surge Tank Clamp Bracket Bolt (Qty: 3) **Tighten** 9 N•m (80 lb in)

Radiator Surge Tank Clamp Bracket Replacement (Left Side) (cont'd)

Callout	Component Name
4	Radiator Surge Tank Clamp Bracket

Radiator Surge Tank Support Bracket Replacement

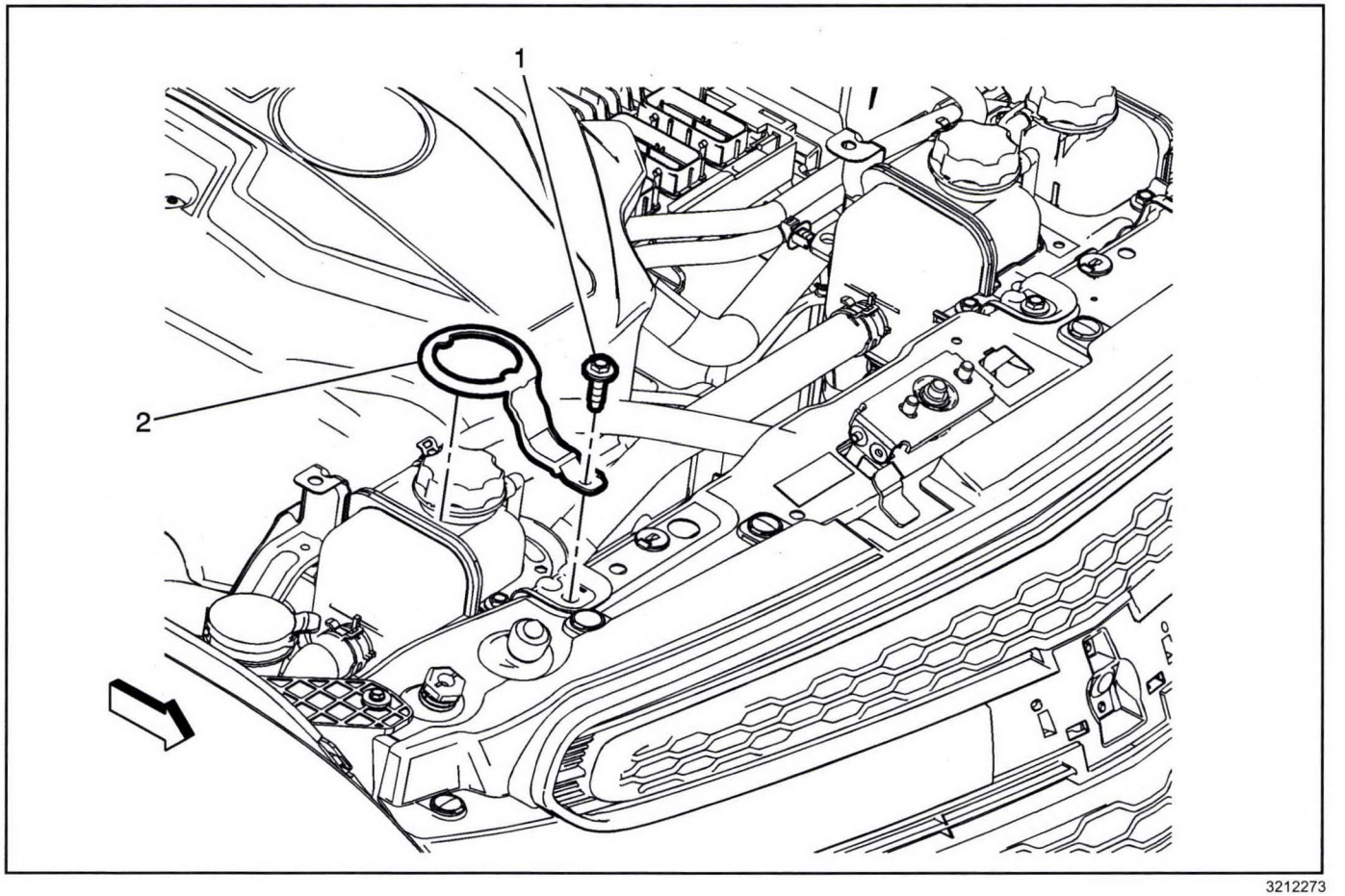

3212273

Radiator Surge Tank Support Bracket Replacement

Callout	Component Name
Preliminary Procedure Remove the front compartment sight shield. Refer to *Front Compartment Front Sight Shield Replacement on page 3-39*.	
1	Radiator Surge Tank Support Bracket Bolt **Caution:** Refer to *Fastener Caution on page 0-8*. **Tighten** 9 N•m (80 lb in)
2	Radiator Surge Tank Support Bracket

Radiator Overflow Hose Replacement

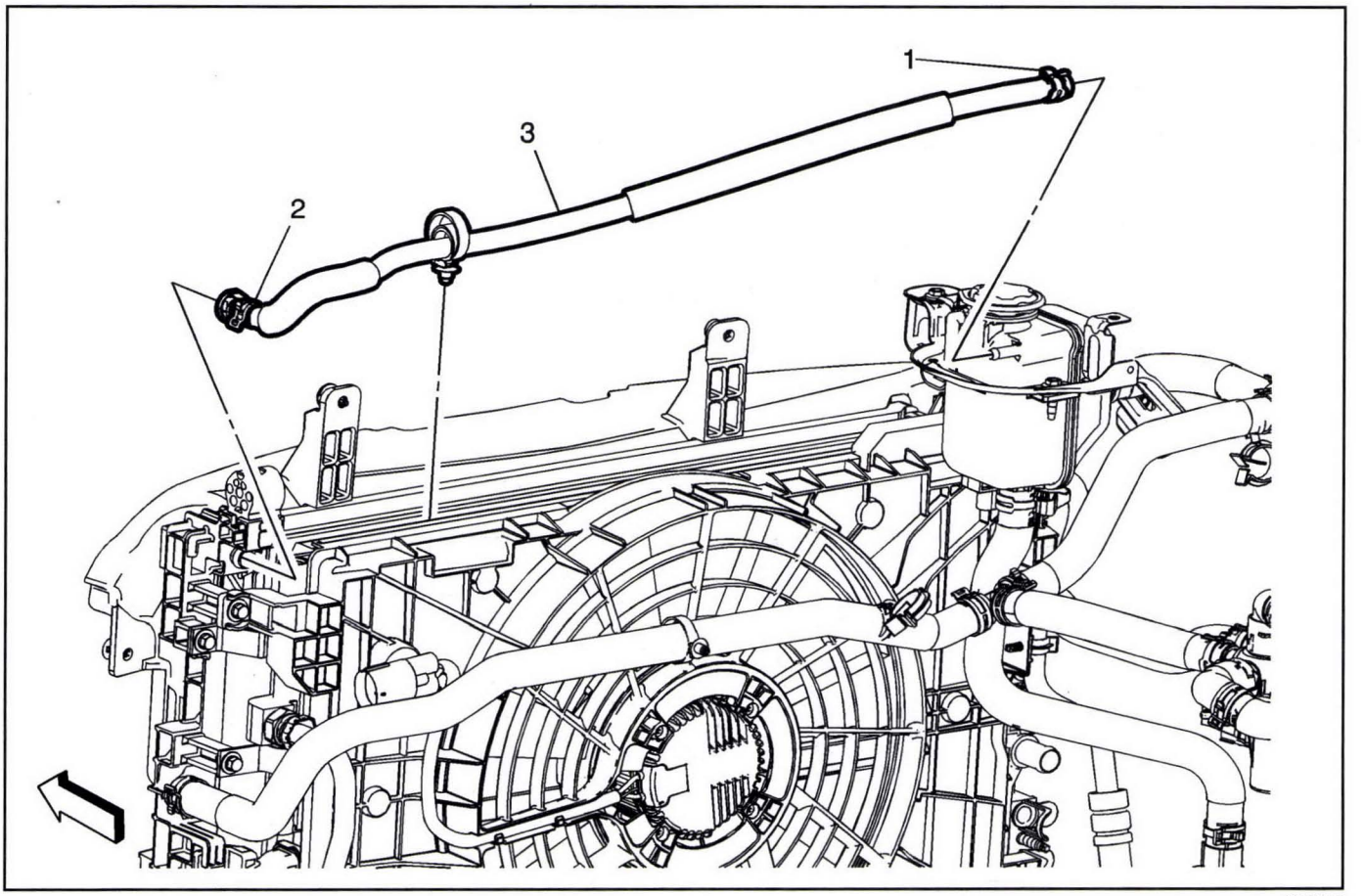

3227120

Radiator Overflow Hose Replacement

Callout	Component Name
Danger: Before conducting any repair to this high voltage cooling system, it is necessary to determine/verify whether no high-voltage system faults exist. If high-voltage faults exist, follow published DTC diagnostics/repair procedures prior to performing any cooling system repairs. Failure to correct High Voltage Faults before working on the high voltage cooling system could result in personal injury or death.	
Preliminary Procedure 1. Turn vehicle power OFF and remove all keyless entry transmitters from the vehicle and secure in a place outside the vehicle. 2. Remove the front compartment sight shield. Refer to *Front Compartment Front Sight Shield Replacement on page 3-39*. 3. Remove the radiator overflow hose retainer from the radiator air upper baffle and deflector. 4. Remove the radiator surge tank clamp bracket bolts. Refer to *Radiator Surge Tank Clamp Bracket Replacement (Right Side) on page 9-279* or *Radiator Surge Tank Clamp Bracket Replacement (Left Side) on page 9-280*.	
1	Radiator Overflow Hose Clamp **Procedure** Reposition the radiator overflow hose clamps using *BO-38185* Hose Clamp Pliers. **Special Tools** *BO-38185* Hose Clamp Pliers For equivalent regional tools, refer to *Special Tools on page 10-77*.
2	Radiator Overflow Hose Connector
3	Radiator Overflow Hose **Procedure** 1. After installation, fill the coolant reservoir to the fill level. Refer to *Drive Motor Battery Cooling System Draining and Filling on page 9-257*. 2. Inspect cooling system for leaks.

Cooling Fan and Shroud Replacement

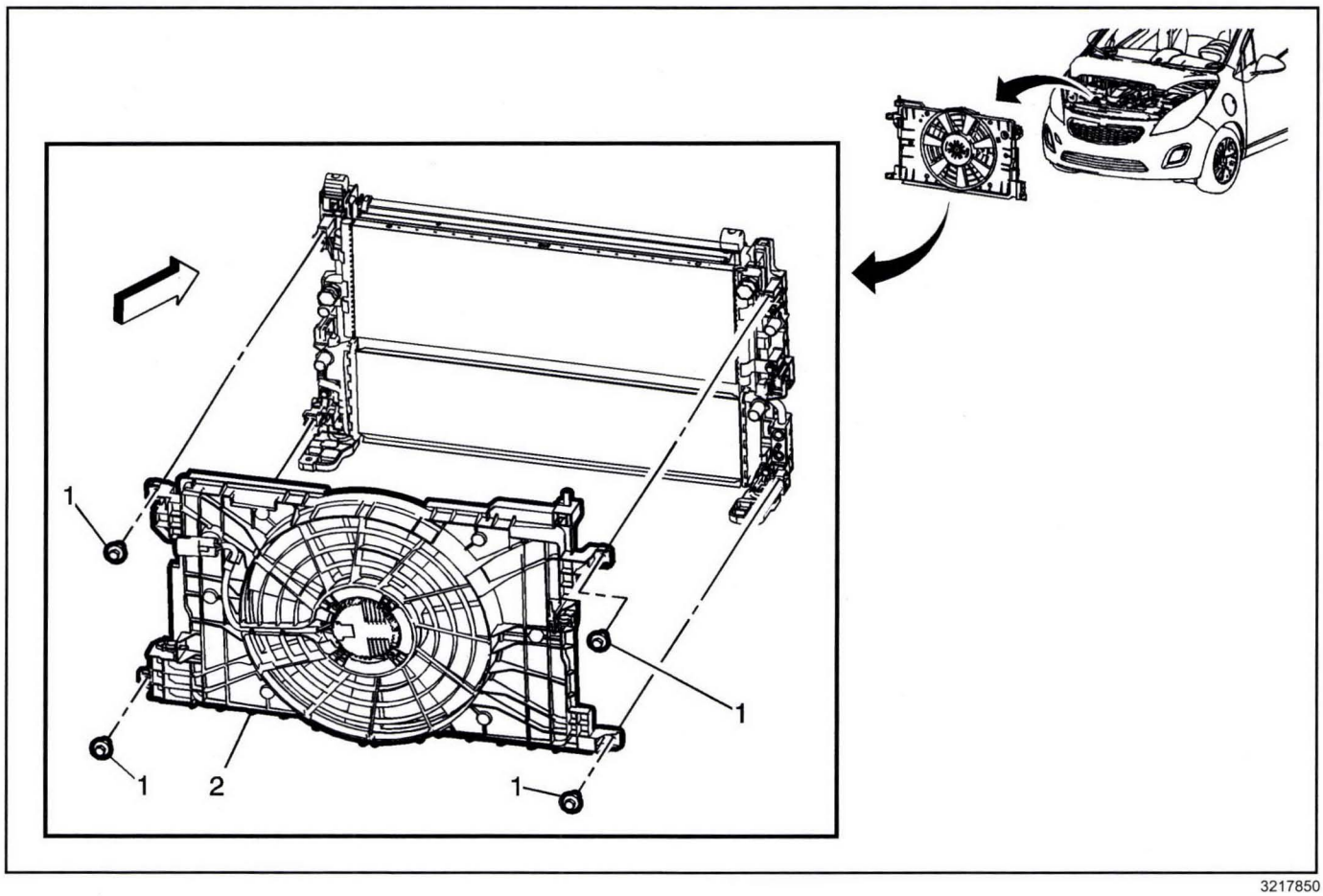

3217850

Cooling Fan and Shroud Replacement

Callout	Component Name
	Danger: Before conducting any repair to this high voltage cooling system, it is necessary to determine/verify whether no high-voltage system faults exist. If high-voltage faults exist, follow published DTC diagnostics/repair procedures prior to performing any cooling system repairs. Failure to correct High Voltage Faults before working on the high voltage cooling system could result in personal injury or death.
	Preliminary Procedure 1. Disconnect the negative battery cable. Refer to *Battery Negative Cable Disconnection and Connection on page 9-20*. 2. Remove the radiator upper brackets. Refer to *Radiator Upper Bracket Replacement on page 9-289*. 3. Remove the front compartment air deflector. Refer to *Front Compartment Air Deflector Replacement on page 3-125*. 4. Remove the left and right side radiator surge tank clamp brackets from the front bumper impact bar. Refer to *Radiator Surge Tank Clamp Bracket Replacement (Right Side) on page 9-279* or *Radiator Surge Tank Clamp Bracket Replacement (Left Side) on page 9-280*. 5. Remove the radiator air upper and lower baffle and deflector. Refer to *Radiator Air Upper Baffle and Deflector Replacement (Air Baffle Upper) on page 9-302* or *Radiator Air Upper Baffle and Deflector Replacement (On Top of Radiator) on page 9-303* and *Radiator Air Lower Baffle and Deflector Replacement (Air Baffle Lower) on page 9-301* 6. Remove the front bumper impact bar. Refer to *Front Bumper Impact Bar Replacement on page 3-55*. 7. Remove the transmission fluid cooler inlet and outlet pipes. Refer to *Transmission Fluid Cooler Inlet Pipe Replacement on page 16-119* and *Transmission Fluid Cooler Outlet Pipe Replacement on page 16-120*. 8. Remove the drive motor generator control module cooling inlet and outlet hoses from the auxiliary radiator. Refer to *Drive Motor Generator Control Module Radiator Inlet Hose Replacement (PE From LTR to A/Separator) on page 9-297* and *Drive Motor Generator Control Module Cooling Outlet Hose Replacement (Auxiliary Radiator to Drive Motor Battery Charger) on page 9-292* or *Drive Motor Generator Control Module Cooling Outlet Hose Replacement (Long Hose) on page 9-293* or *Drive Motor Generator Control Module Cooling Outlet Hose Replacement (Two Bending) on page 9-294* or *Drive Motor Generator Control Module Cooling Outlet Hose Replacement (Straight Hose) on page 9-296*. 9. Remove the drive motor battery coolant inlet and outlet hoses from the radiator. Refer to *Drive Motor Battery Coolant Inlet Hose Replacement (From RESS to Inlet Long Pipe) on page 9-321* or *Drive Motor Battery Coolant Inlet Hose Replacement (From Water Pump to Drive Motor Battery Coolant Inlet Pipe Long) on page 9-322* or *Drive Motor Battery Coolant Inlet Hose Replacement (Outlet Hose Connector to Radiator) on page 9-323* and *Drive Motor Battery Coolant Outlet Hose Replacement on page 9-328*. 10. Remove the radiator overflow hose from the radiator. Refer to *Radiator Overflow Hose Replacement on page 9-282*.
1	Engine Coolant Fan and Shroud Bolt (Qty: 4). **Caution:** Refer to *Fastener Caution on page 0-8*. **Tighten** 6 N•m (53 lb in)
2	Engine Coolant Fan and Shroud **Procedures** 1. Disconnect the electrical connector from the coolant fans. 2. Unclip the wiring harness from the engine coolant fan shroud. 3. Unclip the transmission fluid cooler inlet and outlet pipes and from the engine coolant fan shroud. 4. Support and tilt the radiator assembly (CRFM) forward and lift the engine coolant fan and shroud from the vehicle.

Engine Coolant Temperature Sensor Replacement - Radiator Side

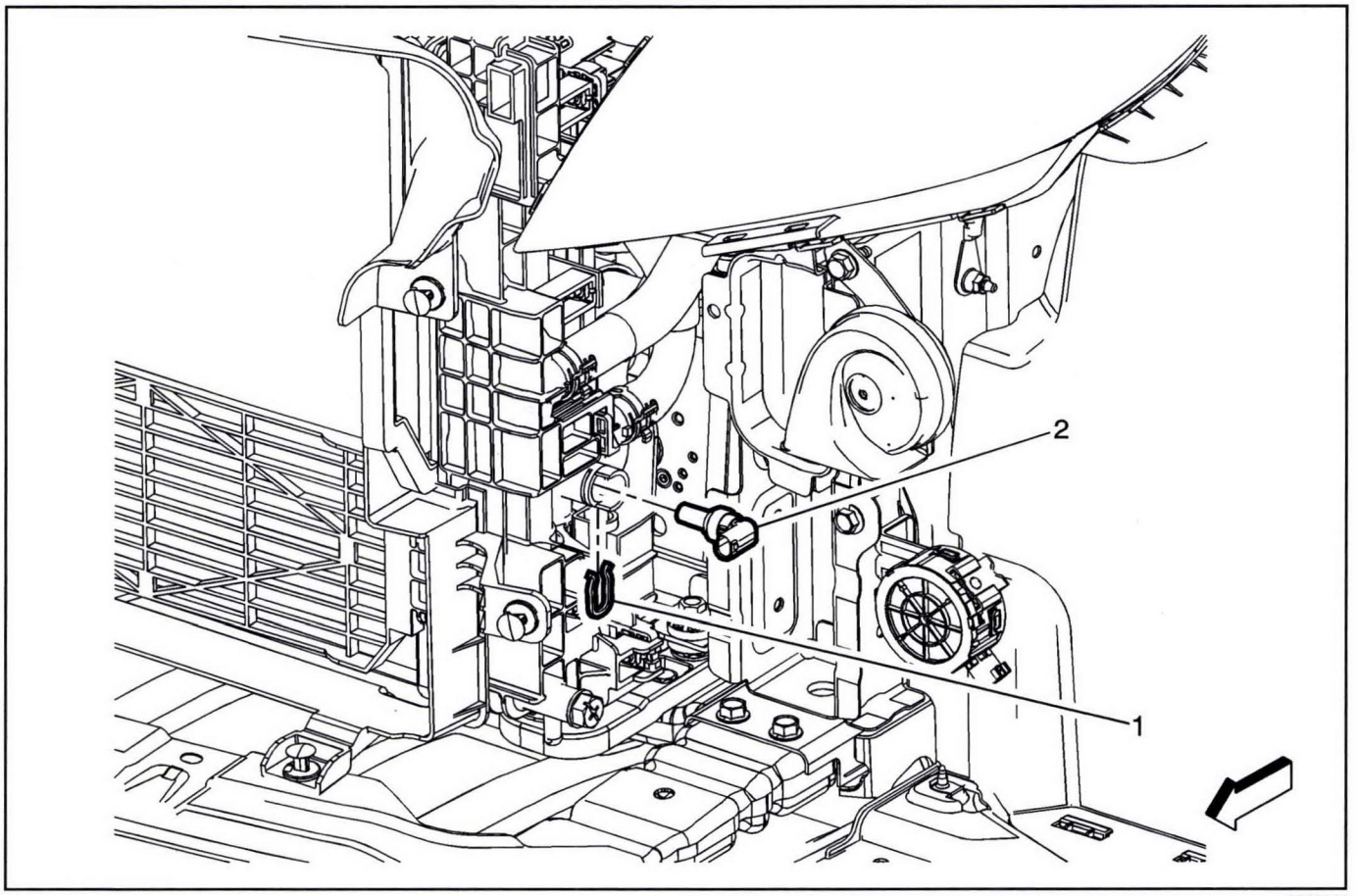

3226502

Engine Coolant Temperature Sensor Replacement - Radiator Side

Callout	Component Name
Danger: Before conducting any repair to this high voltage cooling system, it is necessary to determine/verify whether no high-voltage system faults exist. If high-voltage faults exist, follow published DTC diagnostics/repair procedures prior to performing any cooling system repairs. Failure to correct High Voltage Faults before working on the high voltage cooling system could result in personal injury or death. **Preliminary Procedures** 1. Turn vehicle power OFF and remove all keyless entry transmitters from the vehicle and secure in a place outside the vehicle. 2. Remove the front fascia. Refer to *Front Bumper Fascia Replacement on page 3-57*. 3. Drain the drive motor generator power inverter module cooling system. Refer to *Drive Motor Generator Power Inverter Module Cooling System Draining and Filling on page 9-264*. 4. Disconnect the electrical connector from the coolant temperature sensor. 5. Remove the radiator air upper and lower baffle and deflector. Refer to *Radiator Air Upper Baffle and Deflector Replacement (Air Baffle Upper) on page 9-302* or *Radiator Air Upper Baffle and Deflector Replacement (On Top of Radiator) on page 9-303* and *Radiator Air Lower Baffle and Deflector Replacement (Air Baffle Lower) on page 9-301*. 6. Remove the radiator upper insulator. Refer to *Radiator Upper Insulator Replacement on page 9-290*. 7. Remove the left and right side radiator surge tank clamp brackets from the impact bar. Refer to *Radiator Surge Tank Clamp Bracket Replacement (Right Side) on page 9-279* or *Radiator Surge Tank Clamp Bracket Replacement (Left Side) on page 9-280*. 8. Remove the engine coolant fan and shroud bolts. Refer to *Cooling Fan and Shroud Replacement on page 9-283*. 9. Support the radiator assembly and reposition engine coolant fan and shroud aside.	
1	Engine Coolant Temperature Sensor Retaining Clip
2	Engine Coolant Temperature Sensor **Procedure** 1. After installation, fill the coolant reservoir to the fill level. Refer to *Drive Motor Generator Power Inverter Module Cooling System Draining and Filling on page 9-264*. 2. Inspect cooling system for leaks.

Radiator Drain Cock Replacement

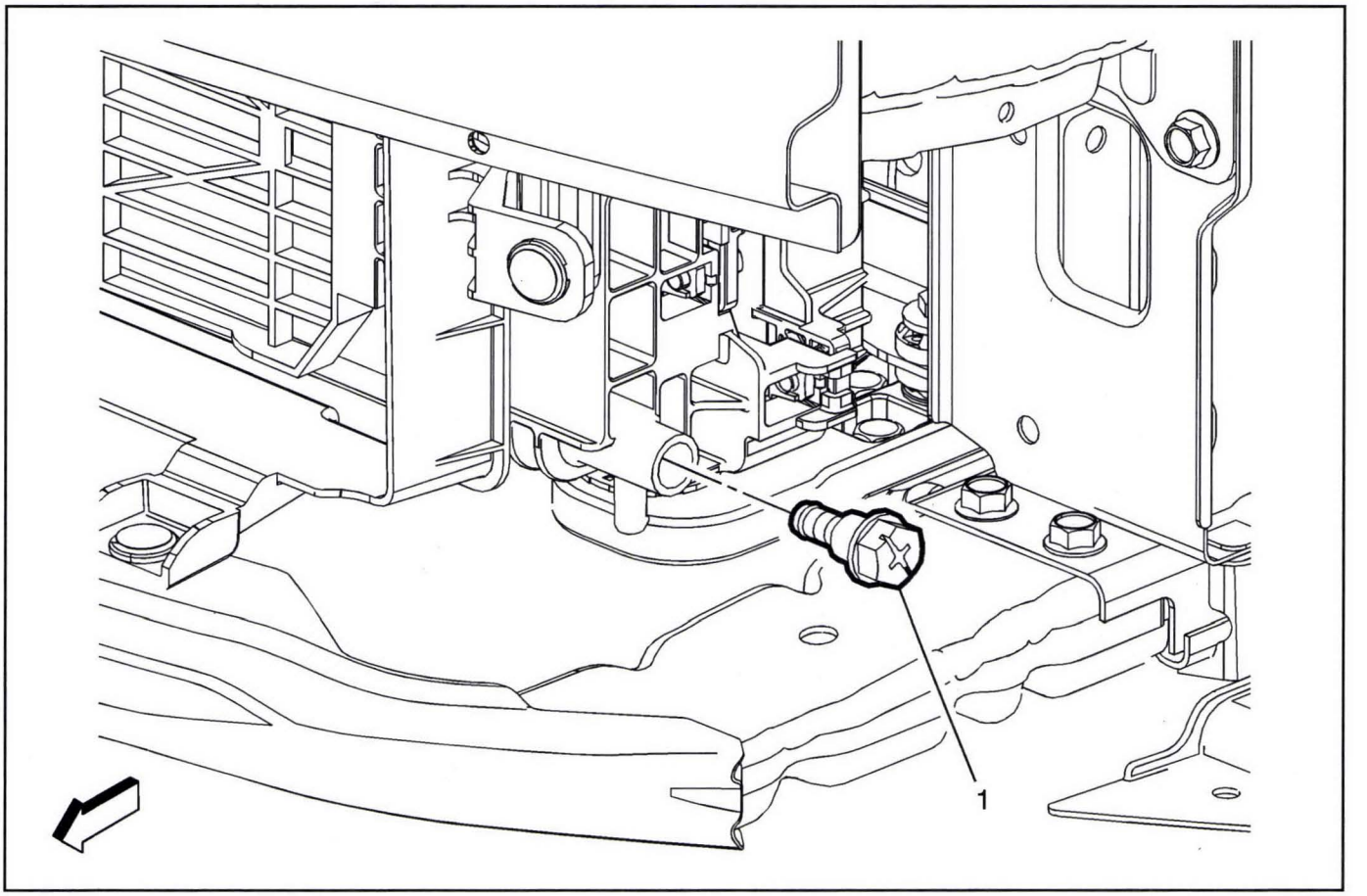

3216876

Radiator Drain Cock Replacement

Callout	Component Name
Danger: Do not use a service jack in locations other than those specified to lift this vehicle. Lifting the vehicle with a jack in those other locations could cause the vehicle to slip off the jack and roll; this could cause injury or death.	
Preliminary Procedures 1. Raise and support the vehicle. Refer to *Lifting and Jacking the Vehicle on page 1-27*. 2. Remove the front bumper fascia air deflector. Refer to *Front Bumper Fascia Air Deflector Replacement on page 3-62*. 3. Attach a rubber hose to the drive motor battery coolant radiator drain port. 4. Place a drain pan under the left side of the drive motor battery coolant radiator.	
1	Radiator Drain Cock **Caution:** Refer to *Fastener Caution on page 0-8*. **Procedures** 1. After installation, fill the coolant reservoir to the fill level. Refer to *Drive Motor Battery Cooling System Draining and Filling on page 9-257*. 2. Inspect cooling system for leaks.

Radiator Lower Bracket Replacement

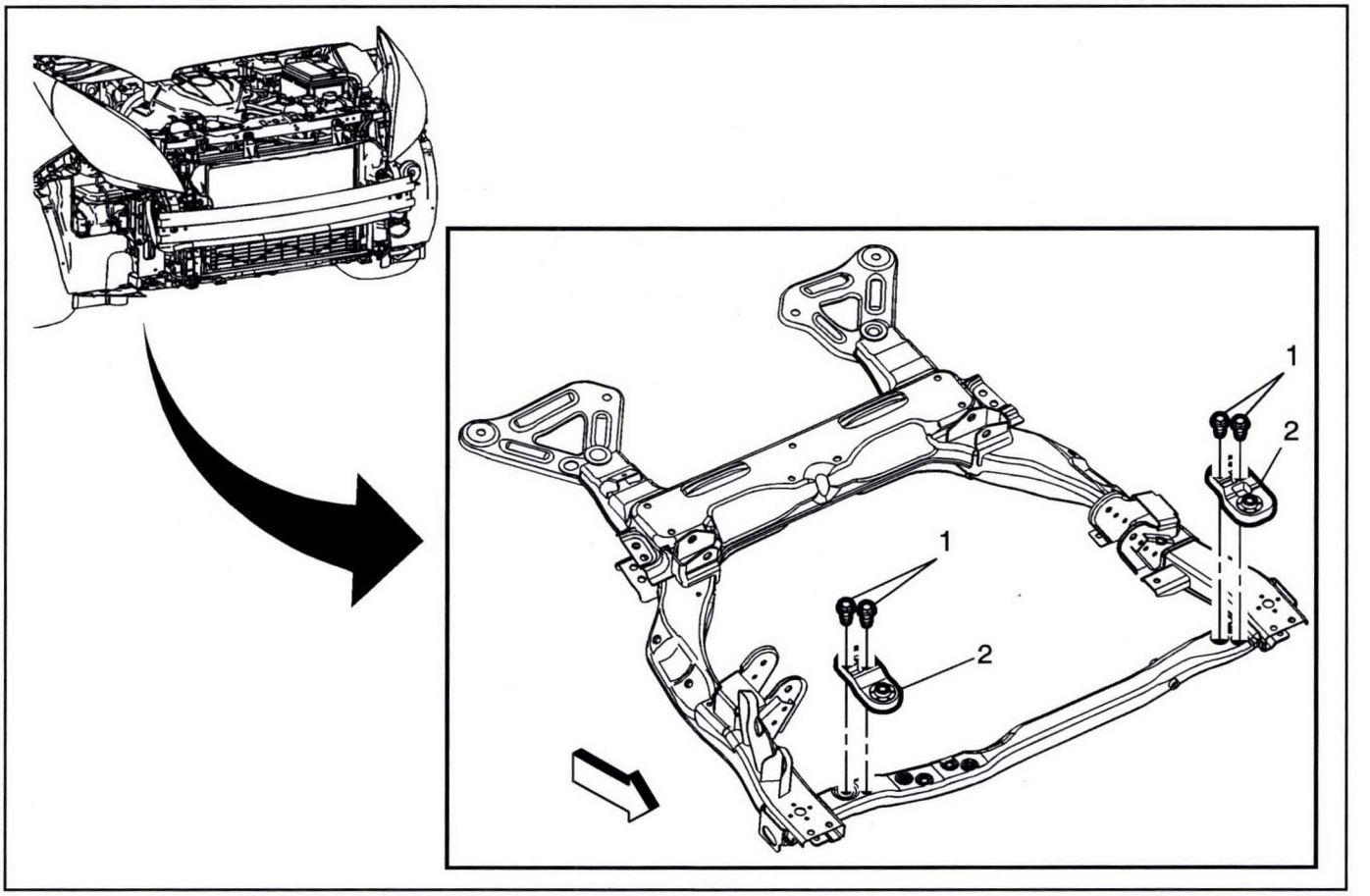

3228143

Radiator Lower Bracket Replacement

Callout	Component Name
Preliminary Procedures 1. Remove the front bumper fascia. Refer to *Front Bumper Fascia Replacement on page 3-57*. 2. Remove the front bumper fascia air deflector. Refer to *Front Bumper Fascia Air Deflector Replacement on page 3-62*. 3. Remove the front compartment air deflector. Refer to *Front Compartment Air Deflector Replacement on page 3-125*. 4. Remove the electronic brake and traction control module bracket from the left radiator lower bracket. Refer to *Electronic Brake and Traction Control Module Bracket Replacement on page 5-74*. 5. Remove the radiator air upper and lower baffle and deflector. Refer to *Radiator Air Upper Baffle and Deflector Replacement (Air Baffle Upper) on page 9-302* or *Radiator Air Upper Baffle and Deflector Replacement (On Top of Radiator) on page 9-303* and *Radiator Air Lower Baffle and Deflector Replacement (Air Baffle Lower) on page 9-301*. 6. Remove the radiator upper insulator. Refer to *Radiator Upper Insulator Replacement on page 9-290*. 7. Support the radiator assembly and electronic brake and traction control module assembly.	
1	Radiator Lower Bracket Fastener (Qty: 4) **Caution:** Refer to *Fastener Caution on page 0-8*. **Tighten** 22 N•m (16 lb ft)
2	Radiator Lower Bracket (Qty: 2)

Radiator Lower Insulator Replacement

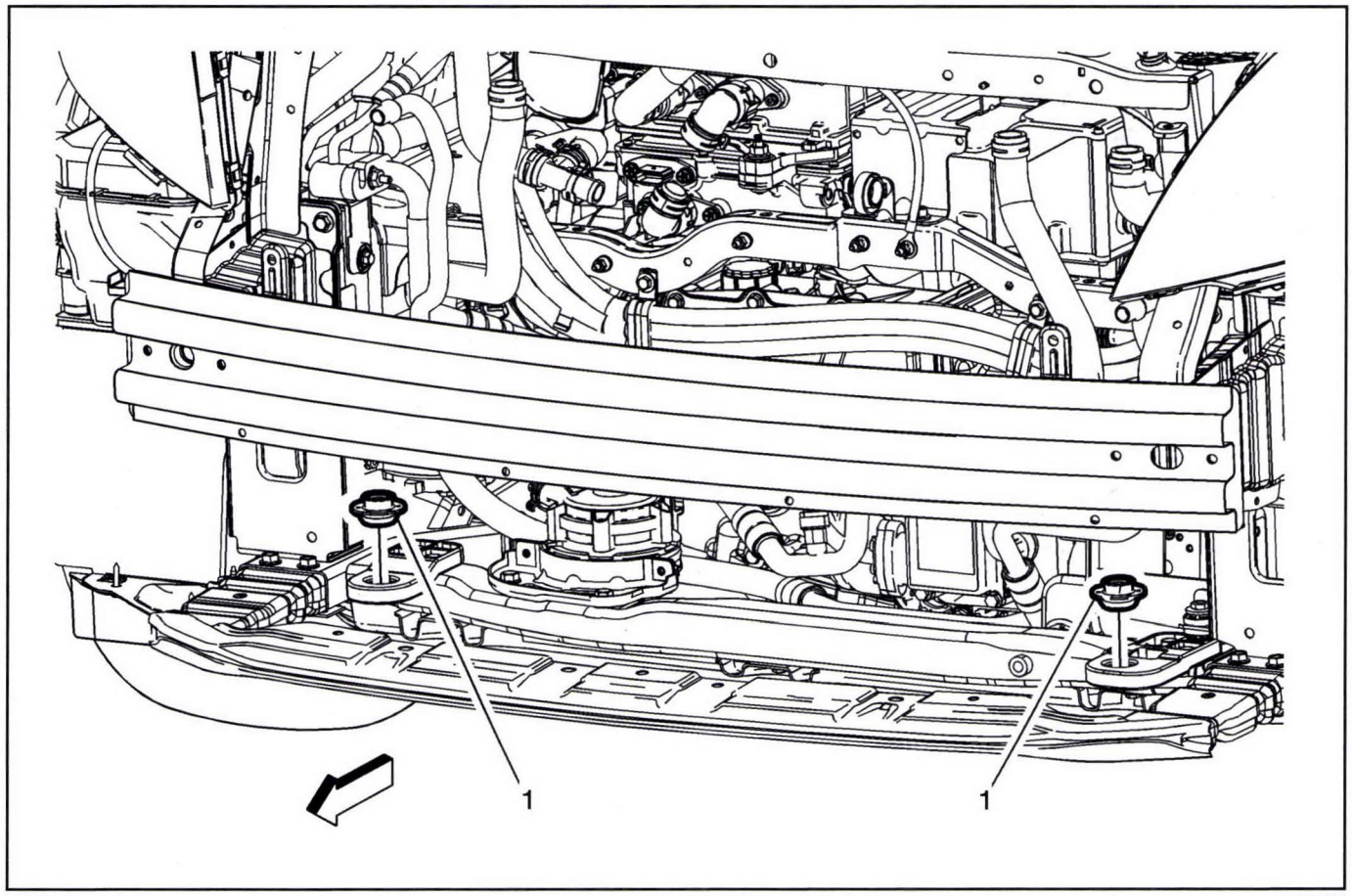

3228369

Radiator Lower Insulator Replacement

Callout	Component Name
Preliminary Procedures 1. Remove the front bumper fascia. Refer to *Front Bumper Fascia Replacement on page 3-57*. 2. Remove the radiator air upper baffle and deflector. Refer to *Radiator Air Upper Baffle and Deflector Replacement (Air Baffle Upper) on page 9-302* or *Radiator Air Upper Baffle and Deflector Replacement (On Top of Radiator) on page 9-303*. 3. Remove the radiator air lower baffle and deflector. Refer to *Radiator Air Lower Baffle and Deflector Replacement (Air Baffle Lower) on page 9-301*. 4. Remove the radiator upper insulator. Refer to *Radiator Upper Insulator Replacement on page 9-290*. 5. Support the radiator assembly.	
1	Radiator Lower Insulator (Qty: 2)

Radiator Upper Bracket Replacement

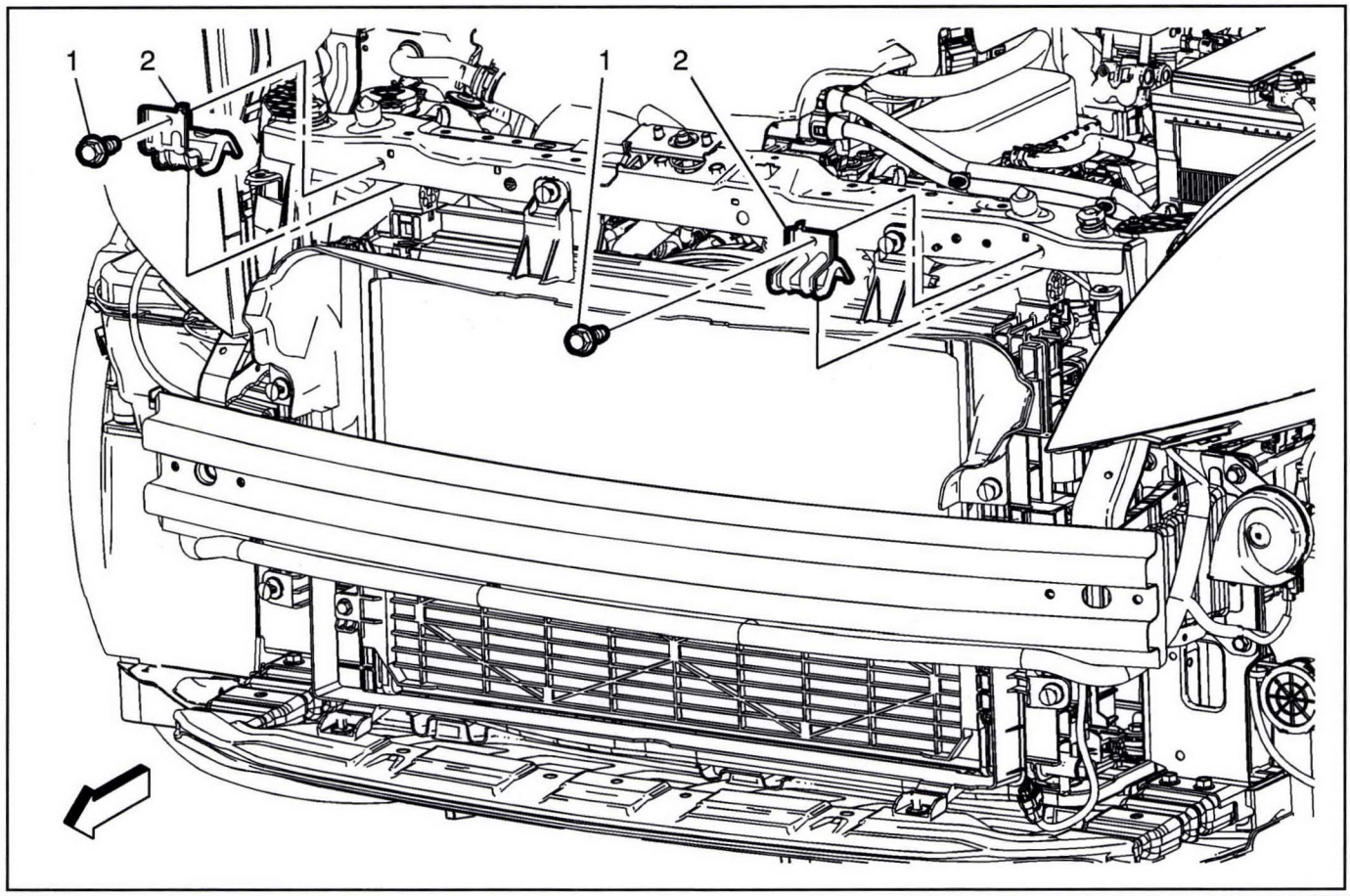

3226097

Radiator Upper Bracket Replacement

Callout	Component Name
Preliminary Procedure Remove the front bumper fascia. Refer to *Front Bumper Fascia Replacement on page 3-57*.	
1	Radiator Upper Bracket Bolt (Qty: 2) **Caution:** Refer to *Fastener Caution on page 0-8*. **Tighten** 22 N•m (16 lb ft)
2	Radiator Upper Bracket (Qty: 2)

Radiator Upper Insulator Replacement

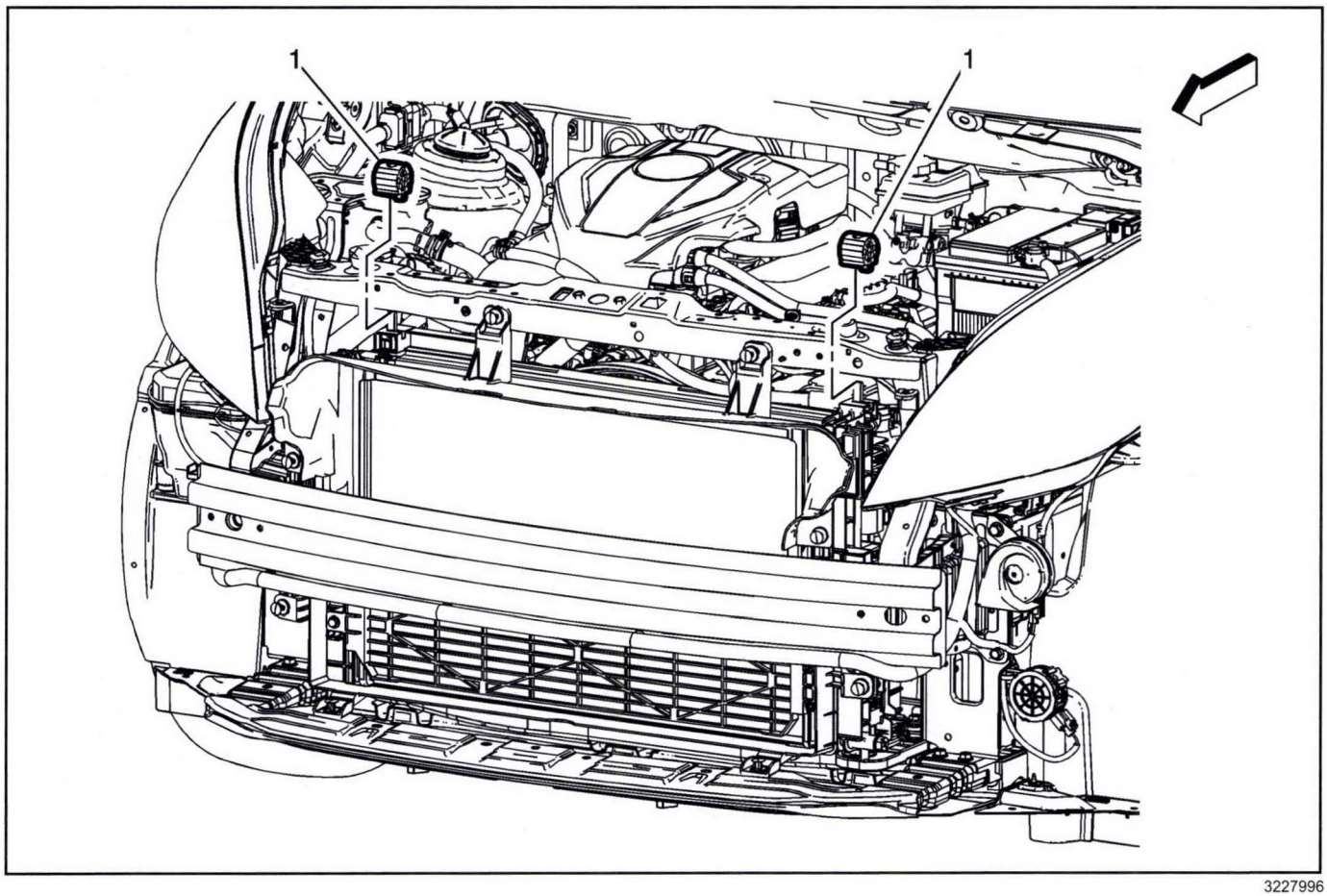

3227996

Radiator Upper Insulator Replacement

Callout	Component Name
Preliminary Procedures 1. Remove the radiator upper bracket. Refer to *Radiator Upper Bracket Replacement on page 9-289*. 2. Support the radiator.	
1	Radiator Upper Mount (Qty: 2)

Drive Motor Generator Control Module Coolant Pump Replacement

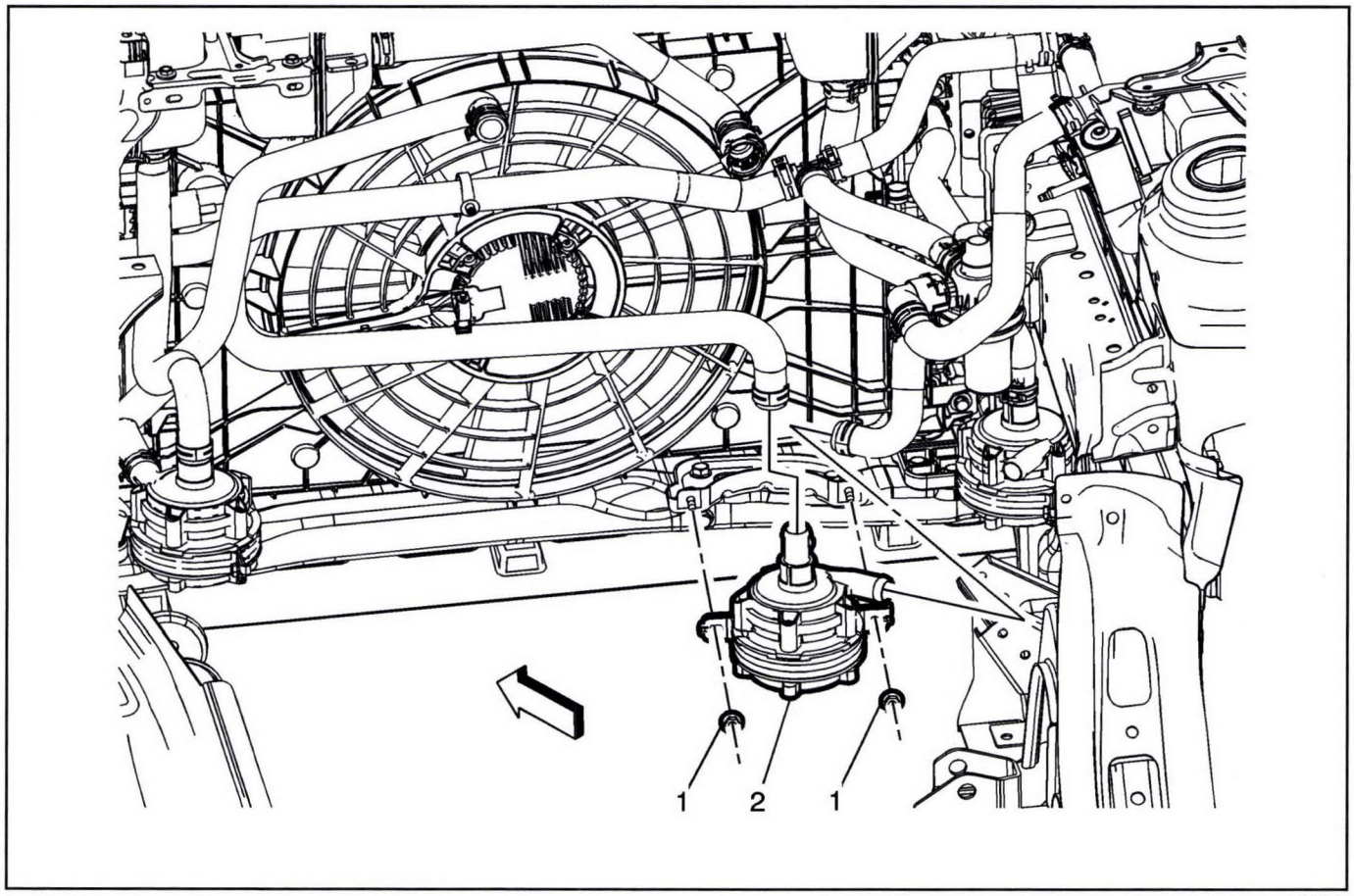

3229342

Drive Motor Generator Control Module Coolant Pump Replacement

Callout	Component Name
Danger: Before conducting any repair to this high voltage cooling system, it is necessary to determine/verify whether no high-voltage system faults exist. If high-voltage faults exist, follow published DTC diagnostics/repair procedures prior to performing any cooling system repairs. Failure to correct High Voltage Faults before working on the high voltage cooling system could result in personal injury or death. **Preliminary Procedures** 1. Turn vehicle power OFF and remove all keyless entry transmitters from the vehicle and secure in a place outside the vehicle. 2. Drain the drive motor generator power inverter module cooling system. Refer to *Drive Motor Generator Power Inverter Module Cooling System Draining and Filling on page 9-264*. 3. Remove the front compartment air deflector. Refer to *Front Compartment Air Deflector Replacement on page 3-125*. 4. Remove the drive motor generator control module radiator inlet hose. Refer to *Drive Motor Generator Control Module Radiator Inlet Hose Replacement (PE From LTR to A/Separator) on page 9-297*. 5. Remove the drive motor generator power inverter module cooling outlet hose. Refer to *Drive Motor Generator Power Inverter Module Cooling Outlet Hose Replacement (PE From A/Separator To Water Pump) on page 9-268*.	
1	Drive Motor Generator Control Module Coolant Pump Bolt (Qty: 2) **Caution:** Refer to *Fastener Caution on page 0-8*. **Tighten** 9 N•m (80 lb in)
2	Drive Motor Generator Control Module Coolant Pump **Procedure** Disconnect the electrical connector from the drive motor generator control module coolant pump.

Drive Motor Generator Control Module Cooling Outlet Hose Replacement (Auxiliary Radiator to Drive Motor Battery Charger)

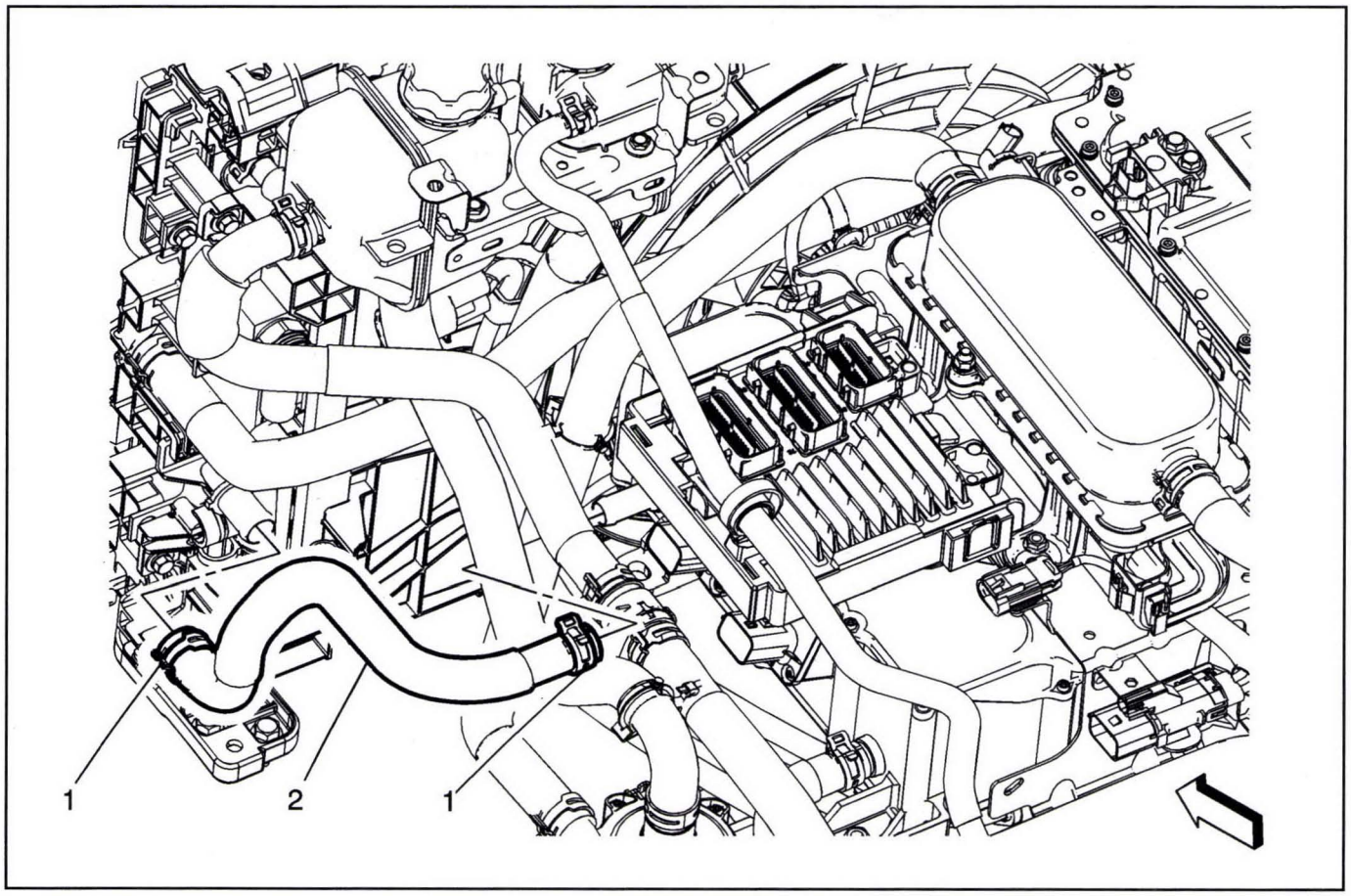

3239304

Drive Motor Generator Control Module Cooling Outlet Hose Replacement (Auxiliary Radiator to Drive Motor Battery Charger)

Callout	Component Name
Danger: Before conducting any repair to this high voltage cooling system, it is necessary to determine/verify whether no high-voltage system faults exist. If high-voltage faults exist, follow published DTC diagnostics/repair procedures prior to performing any cooling system repairs. Failure to correct High Voltage Faults before working on the high voltage cooling system could result in personal injury or death.	
	Preliminary Procedures 1. Turn vehicle power OFF and remove all keyless entry transmitters from the vehicle and secure in a place outside the vehicle. 2. Remove the front compartment sight shield. Refer to *Front Compartment Front Sight Shield Replacement on page 3-39*. 3. Remove the front bumper fascia. Refer to *Front Bumper Fascia Replacement on page 3-57*. 4. Drain the drive motor generator power inverter module cooling system. Refer to *Drive Motor Generator Power Inverter Module Cooling System Draining and Filling on page 9-264*. 5. Remove the battery tray. Refer to *Battery Tray Replacement on page 9-30*. 6. Remove the left side radiator surge tank clamp bracket from the impact bar. Refer to *Radiator Surge Tank Clamp Bracket Replacement (Right Side) on page 9-279* or *Radiator Surge Tank Clamp Bracket Replacement (Left Side) on page 9-280*.
1	Drive Motor Generator Control Module Cooling Outlet Hose Clamp (Qty: 2) **Procedure** Reposition the drive motor generator control module cooling outlet hose clamps using *BO-38185* hose clamp pliers. **Special Tools** *BO-38185* Hose Clamp Pliers For equivalent regional tools, refer to *Special Tools on page 10-77*.

Drive Motor Generator Control Module Cooling Outlet Hose Replacement (Auxiliary Radiator to Drive Motor Battery Charger) (cont'd)

Callout	Component Name
2	Drive Motor Generator Control Module Cooling Outlet Hose **Procedure** 1. Fill the cooling system to the proper level. Refer to *Drive Motor Generator Power Inverter Module Cooling System Draining and Filling on page 9-264*. 2. Inspect the cooling system for leaks.

Drive Motor Generator Control Module Cooling Outlet Hose Replacement (Long Hose)

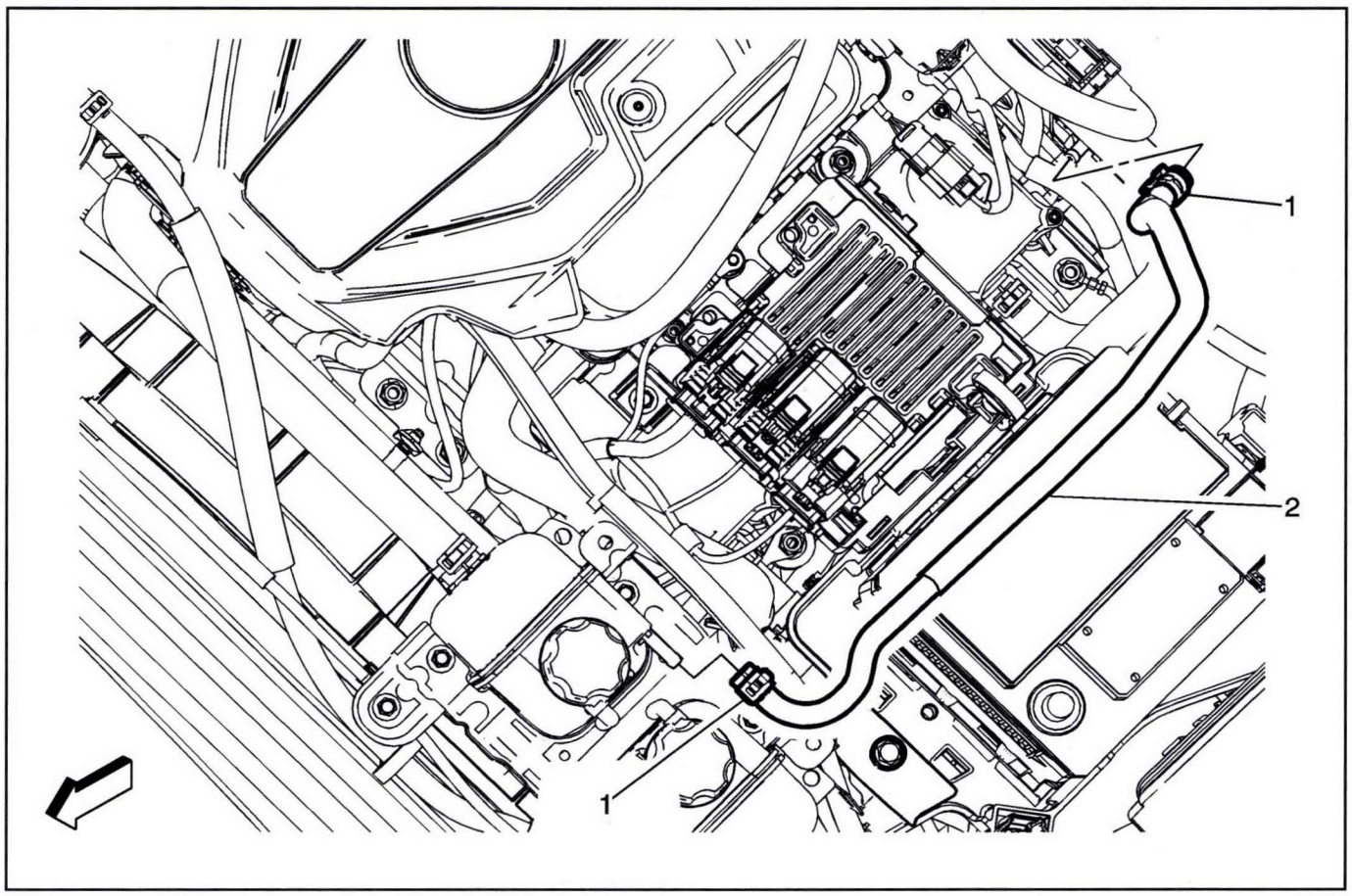

3239368

Drive Motor Generator Control Module Cooling Outlet Hose Replacement (Long Hose)

Callout	Component Name
	Danger: Before conducting any repair to this high voltage cooling system, it is necessary to determine/verify whether no high-voltage system faults exist. If high-voltage faults exist, follow published DTC diagnostics/repair procedures prior to performing any cooling system repairs. Failure to correct High Voltage Faults before working on the high voltage cooling system could result in personal injury or death.
	Preliminary Procedures 1. Turn vehicle power OFF and remove all keyless entry transmitters from the vehicle and secure in a place outside the vehicle. 2. Remove the front compartment sight shield. Refer to *Front Compartment Front Sight Shield Replacement on page 3-39*. 3. Drain the drive motor generator power inverter module cooling system. Refer to *Drive Motor Generator Power Inverter Module Cooling System Draining and Filling on page 9-264*. 4. Remove the engine control module (ECM) bracket. Refer to *Engine Control Module Bracket Replacement on page 9-172*.

Drive Motor Generator Control Module Cooling Outlet Hose Replacement (Long Hose) (cont'd)

Callout	Component Name
1	Drive Motor Generator Control Module Cooling Outlet Hose Clamp (Qty: 2) **Procedure** Reposition the drive motor generator control module cooling outlet hose clamps using *BO-38185* hose clamp pliers. **Special Tools** *BO-38185* Hose Clamp Pliers For equivalent regional tools, refer to *Special Tools on page 10-77*.
2	Drive Motor Generator Control Module Cooling Outlet Hose **Procedure** 1. Remove the drive motor generator control module cooling outlet hose from the retaining clip. 2. Fill the cooling system to the proper level. Refer to *Drive Motor Generator Power Inverter Module Cooling System Draining and Filling on page 9-264*. 3. Inspect the cooling system for leaks.

Drive Motor Generator Control Module Cooling Outlet Hose Replacement (Two Bending)

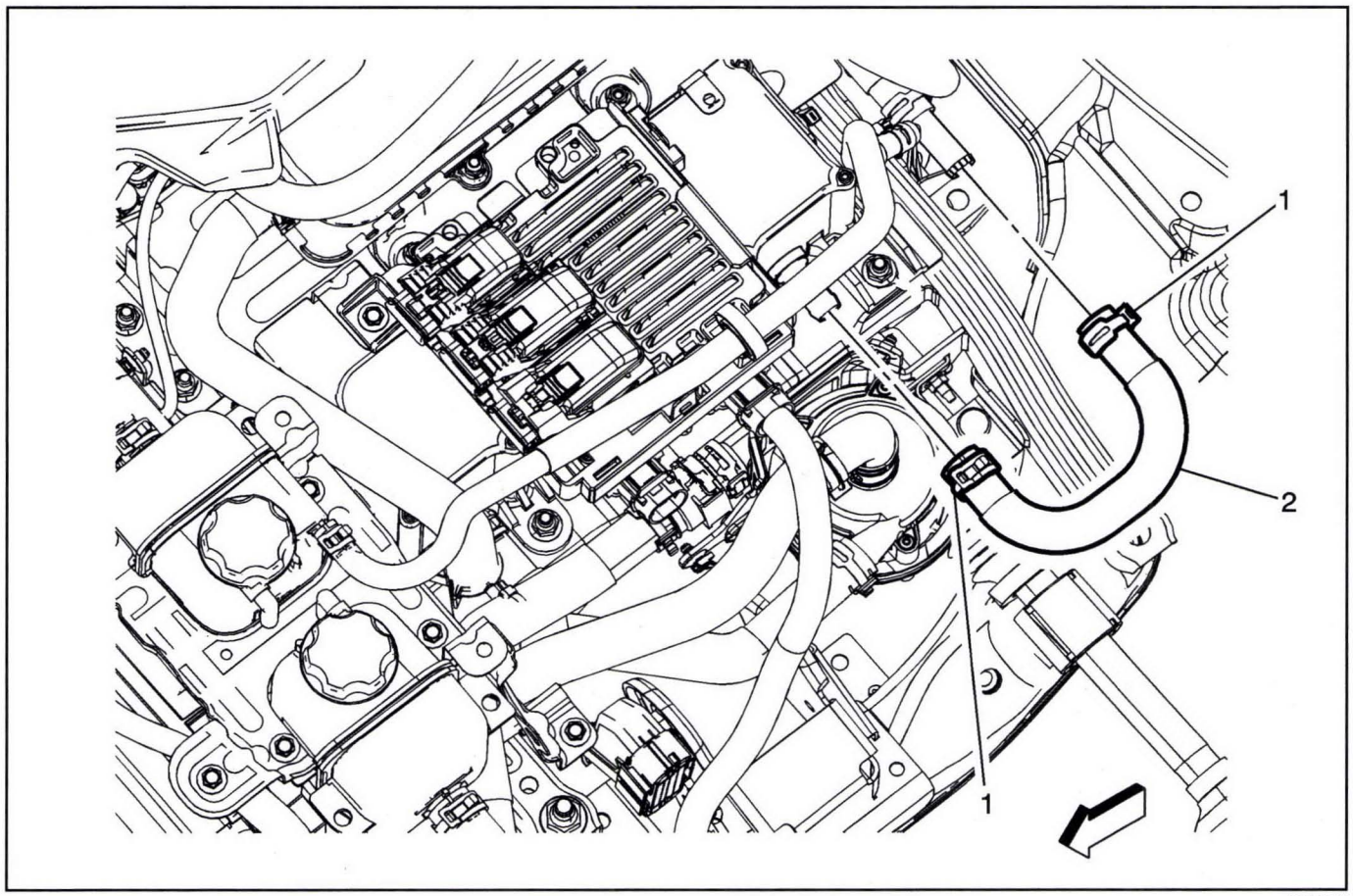

3239511

Drive Motor Generator Control Module Cooling Outlet Hose Replacement (Two Bending)

Callout	Component Name
Danger: Before conducting any repair to this high voltage cooling system, it is necessary to determine/verify whether no high-voltage system faults exist. If high-voltage faults exist, follow published DTC diagnostics/repair procedures prior to performing any cooling system repairs. Failure to correct High Voltage Faults before working on the high voltage cooling system could result in personal injury or death. **Preliminary Procedures** 1. Turn vehicle power OFF and remove all keyless entry transmitters from the vehicle and secure in a place outside the vehicle. 2. Remove the front compartment sight shield. Refer to *Front Compartment Front Sight Shield Replacement on page 3-39*. 3. Drain the drive motor generator power inverter module cooling system. Refer to *Drive Motor Generator Power Inverter Module Cooling System Draining and Filling on page 9-264*. 4. Remove the battery tray. Refer to *Battery Tray Replacement on page 9-30*.	
1	Drive Motor Generator Control Module Cooling Outlet Hose Clamp (Qty: 2) **Procedure** Reposition the drive motor generator control module cooling outlet hose clamps using *BO-38185* hose clamp pliers. **Special Tools** *BO-38185* Hose Clamp Pliers For equivalent regional tools, refer to *Special Tools on page 10-77*.
2	Drive Motor Generator Control Module Cooling Outlet Hose **Procedure** 1. Fill the cooling system to the proper level. Refer to *Drive Motor Generator Power Inverter Module Cooling System Draining and Filling on page 9-264*. 2. Inspect the cooling system for leaks.

Drive Motor Generator Control Module Cooling Outlet Hose Replacement (Straight Hose)

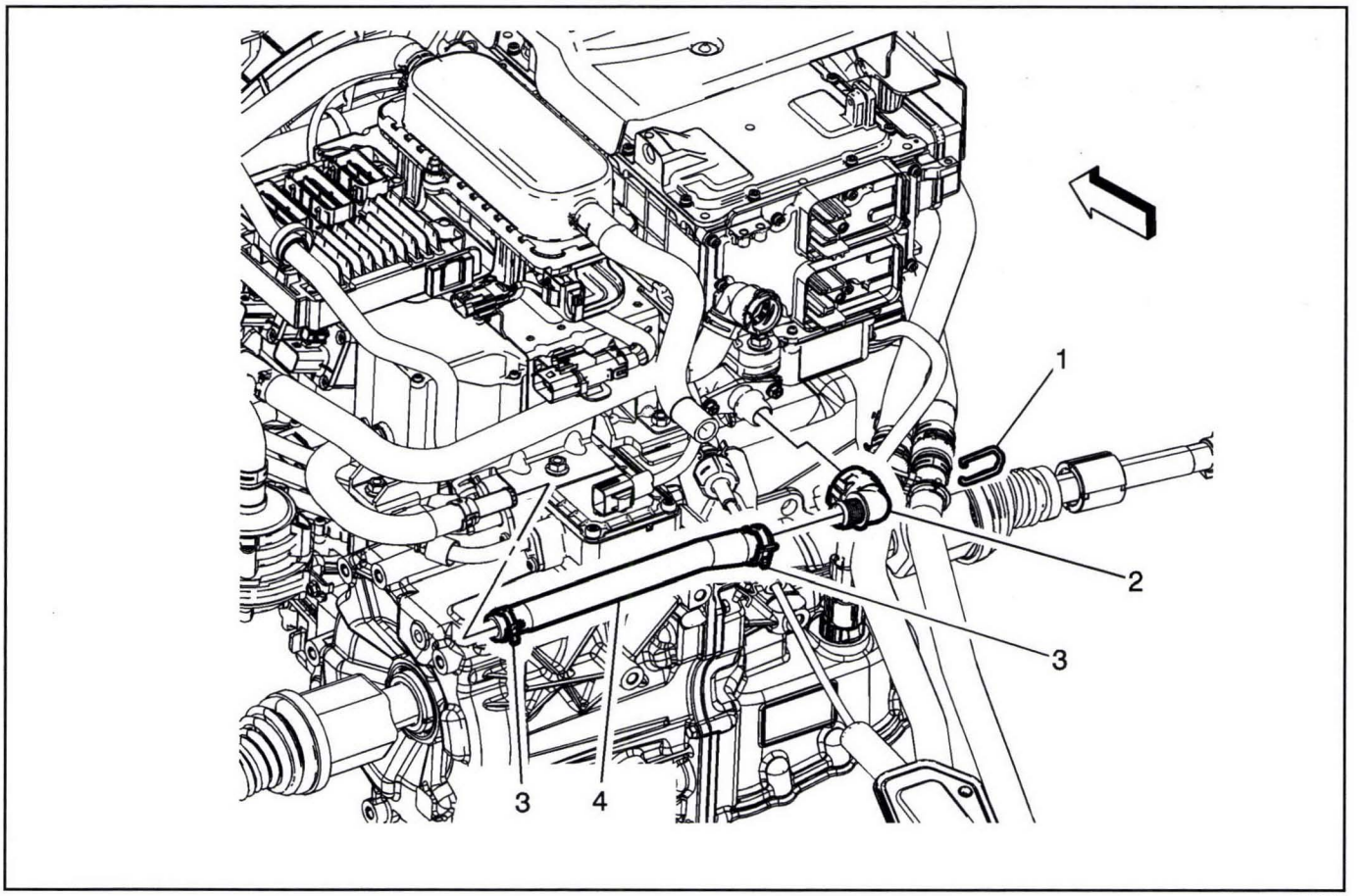

3239612

Drive Motor Generator Control Module Cooling Outlet Hose Replacement (Straight Hose)

Callout	Component Name
Danger: Before conducting any repair to this high voltage cooling system, it is necessary to determine/verify whether no high-voltage system faults exist. If high-voltage faults exist, follow published DTC diagnostics/repair procedures prior to performing any cooling system repairs. Failure to correct High Voltage Faults before working on the high voltage cooling system could result in personal injury or death. **Preliminary Procedures** 1. Turn vehicle power OFF and remove all keyless entry transmitters from the vehicle and secure in a place outside the vehicle. 2. Remove the front compartment sight shield. Refer to *Front Compartment Front Sight Shield Replacement on page 3-39*. 3. Drain the drive motor generator power inverter module cooling system. Refer to *Drive Motor Generator Power Inverter Module Cooling System Draining and Filling on page 9-264*. 4. Remove the high voltage disconnect circuit connector cover. Refer to *High Voltage Disconnect Circuit Connector Cover Replacement on page 9-174*. 5. Remove the battery tray. Refer to *Battery Tray Replacement on page 9-30*. 6. Remove the drive motor generator power inverter module. Refer to *Drive Motor Generator Power Inverter Module Replacement on page 9-184*.	
1	Drive Motor Generator Control Module Cooling Outlet Hose Retainer
2	Drive Motor Generator Control Module Cooling Outlet Hose Connector
3	Drive Motor Generator Control Module Cooling Outlet Hose Clamp (Qty: 2) **Procedure** Reposition the drive motor generator control module cooling outlet hose clamps using *BO-38185* hose clamp pliers. **Special Tools** *BO-38185* Hose Clamp Pliers For equivalent regional tools, refer to *Special Tools on page 10-77*.

Drive Motor Generator Control Module Cooling Outlet Hose Replacement (Straight Hose) (cont'd)

Callout	Component Name
4	Drive Motor Generator Control Module Cooling Outlet Hose **Procedure** 1. Fill the cooling system to the proper level. Refer to *Drive Motor Generator Power Inverter Module Cooling System Draining and Filling on page 9-264*. 2. Inspect the cooling system for leaks.

Drive Motor Generator Control Module Radiator Inlet Hose Replacement (PE From LTR to A/Separator)

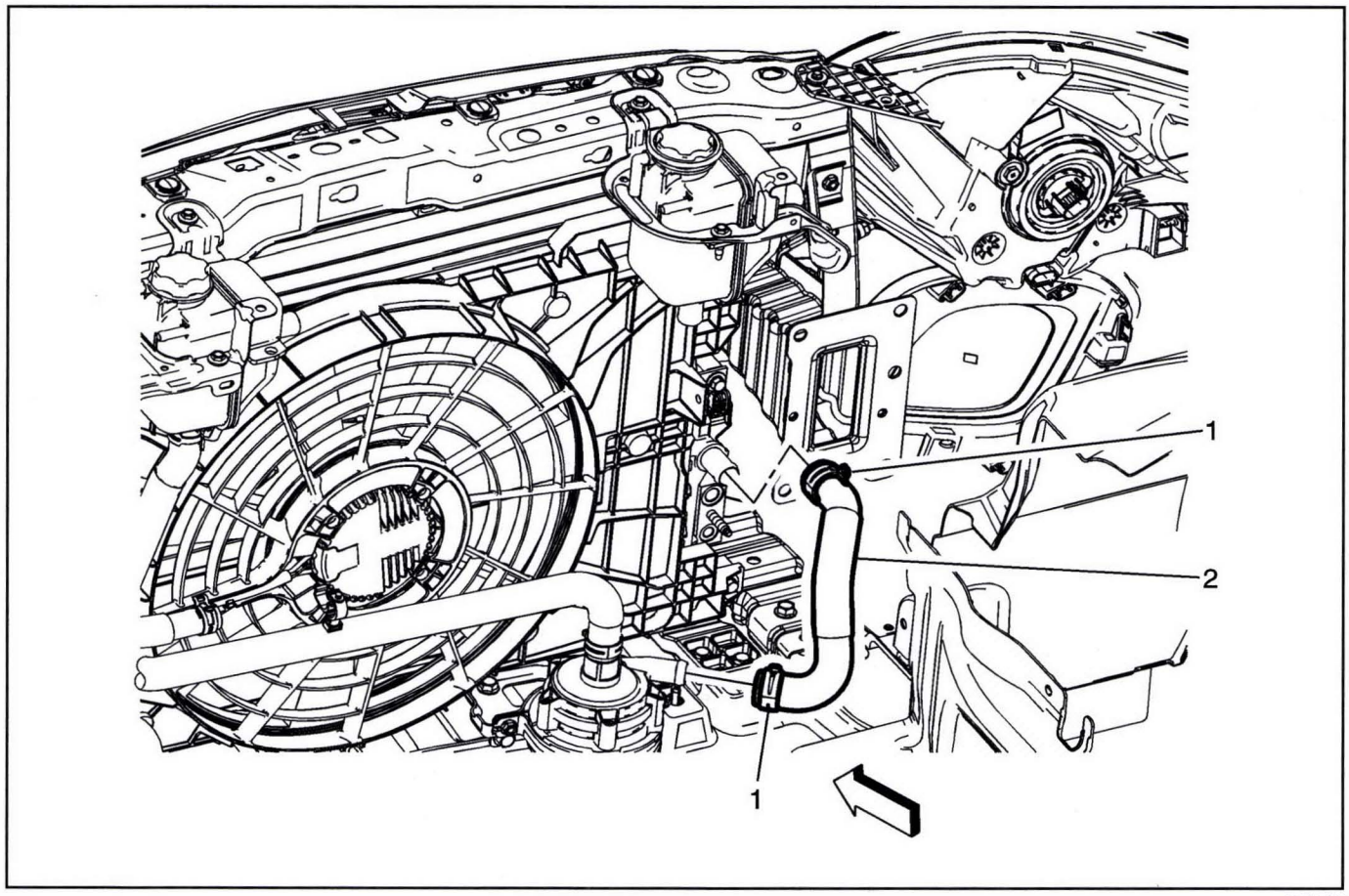

3229190

Drive Motor Generator Control Module Radiator Inlet Hose Replacement (PE From LTR to A/Separator)

Callout	Component Name
	Danger: Before conducting any repair to this high voltage cooling system, it is necessary to determine/verify whether no high-voltage system faults exist. If high-voltage faults exist, follow published DTC diagnostics/repair procedures prior to performing any cooling system repairs. Failure to correct High Voltage Faults before working on the high voltage cooling system could result in personal injury or death. **Preliminary Procedures** 1. Turn vehicle power OFF and remove all keyless entry transmitters from the vehicle and secure in a place outside the vehicle. 2. Drain the drive motor generator power inverter module cooling system. Refer to *Drive Motor Generator Power Inverter Module Cooling System Draining and Filling on page 9-264*. 3. Remove the front bumper fascia. Refer to *Front Bumper Fascia Replacement on page 3-57*.

Drive Motor Generator Control Module Radiator Inlet Hose Replacement (PE From LTR to A/Separator) (cont'd)

Callout	Component Name
1	Drive Motor Generator Control Module Radiator Inlet Hose Clamp (Qty: 2) **Procedure** Reposition the drive motor generator control module radiator inlet hose clamps using *BO-38185* pliers. **Special Tools** *BO-38185* Hose Clamp Pliers For equivalent regional tools, refer to *Special Tools on page 10-77*.
2	Drive Motor Generator Control Module Radiator Inlet Hose **Procedure** 1. Fill the coolant to the proper level. 2. Check the cooling system for leaks.

Generator Control Module Coolant Hose Replacement (PE From APM TO TPIM)

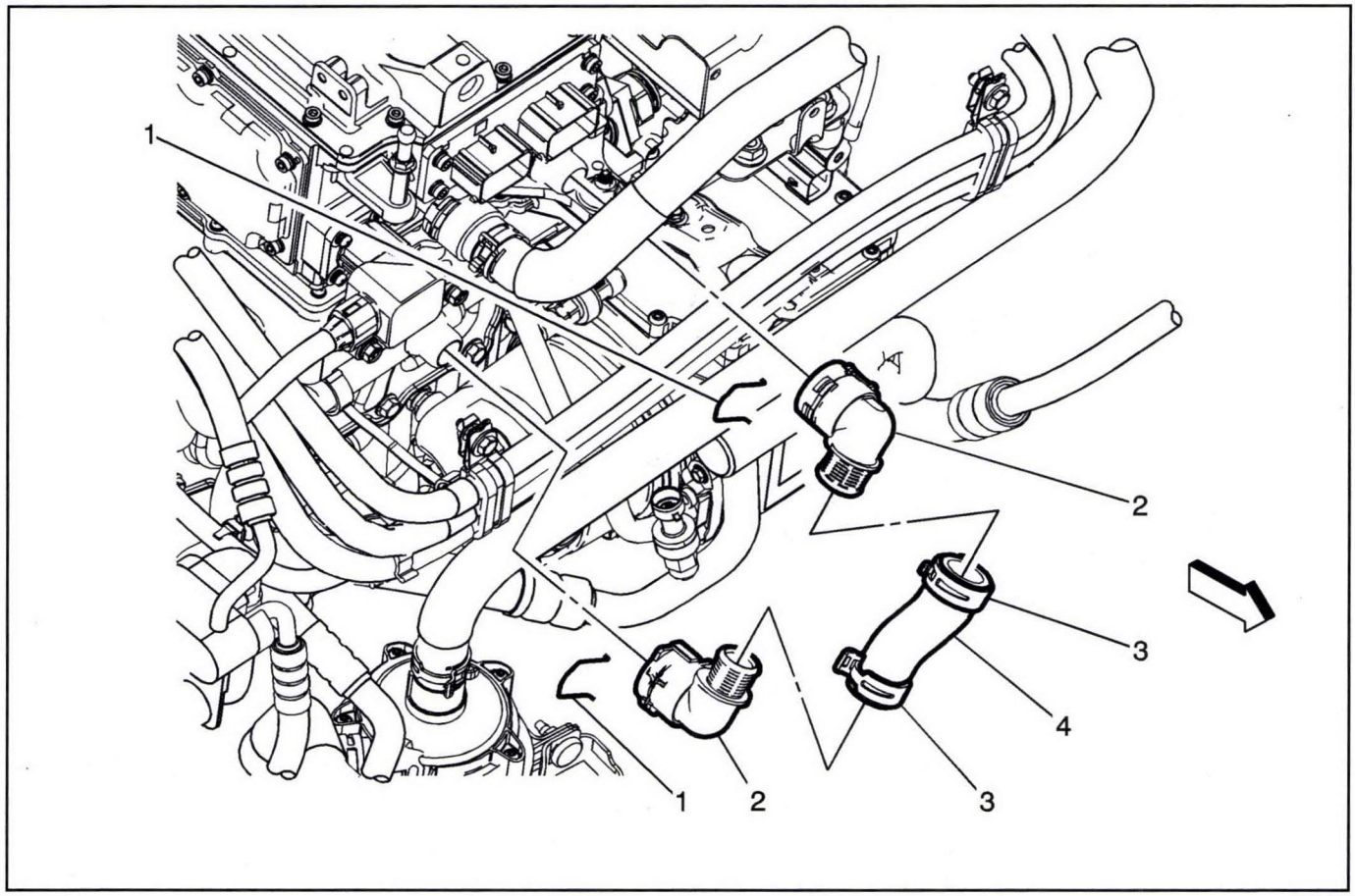

3229824

Generator Control Module Coolant Hose Replacement (PE From APM TO TPIM)

Callout	Component Name
Danger: Before conducting any repair to this high voltage cooling system, it is necessary to determine/verify whether no high-voltage system faults exist. If high-voltage faults exist, follow published DTC diagnostics/repair procedures prior to performing any cooling system repairs. Failure to correct High Voltage Faults before working on the high voltage cooling system could result in personal injury or death. **Preliminary Procedures** 1. Turn vehicle power OFF and remove all keyless entry transmitters from the vehicle and secure in a place outside the vehicle. 2. Remove the front compartment sight shield. Refer to *Front Compartment Front Sight Shield Replacement on page 3-39*. 3. Remove the high voltage disconnect circuit connector cover. Refer to *High Voltage Disconnect Circuit Connector Cover Replacement on page 9-174*. 4. Drain the drive motor generator power inverter module cooling system. Refer to *Drive Motor Generator Power Inverter Module Cooling System Draining and Filling on page 9-264*. 5. Remove the right side radiator surge tank clamp brackets from the impact bar. Refer to *Radiator Surge Tank Clamp Bracket Replacement (Right Side) on page 9-279* or *Radiator Surge Tank Clamp Bracket Replacement (Left Side) on page 9-280*. 6. Remove the electric differential drive motor power inverter module cooling hose from the drive motor generator power inverter module. Refer to *Electric Differential Drive Motor Power Inverter Module Cooling Hose Replacement (PE TPIM to LTR) on page 9-270*. 7. Disconnect the engine wiring harness connectors from the drive motor generator power inverter module to access generator control module coolant hose retaining clip. 8. Disconnect the engine harness connector from the accessory DC power control (APM) module.	
1	Generator Control Module Coolant Hose Retaining Clip (Qty: 2)
2	Generator Control Module Coolant Hose Connector (Qty: 2)
3	Generator Control Module Coolant Hose Clamp (Qty: 2) **Procedure** Reposition the generator control module coolant hose clamp using *BO-38185* hose clamp pliers. **Special Tools** *BO-38185* Hose Clamp Pliers For equivalent regional tools, refer to *Special Tools on page 10-77*.
4	Generator Control Module Coolant Hose **Procedure** 1. Fill the cooling system to the proper level. Refer to *Drive Motor Generator Power Inverter Module Cooling System Draining and Filling on page 9-264*. 2. Inspect the cooling system for leaks.

Radiator Grille Guard Replacement

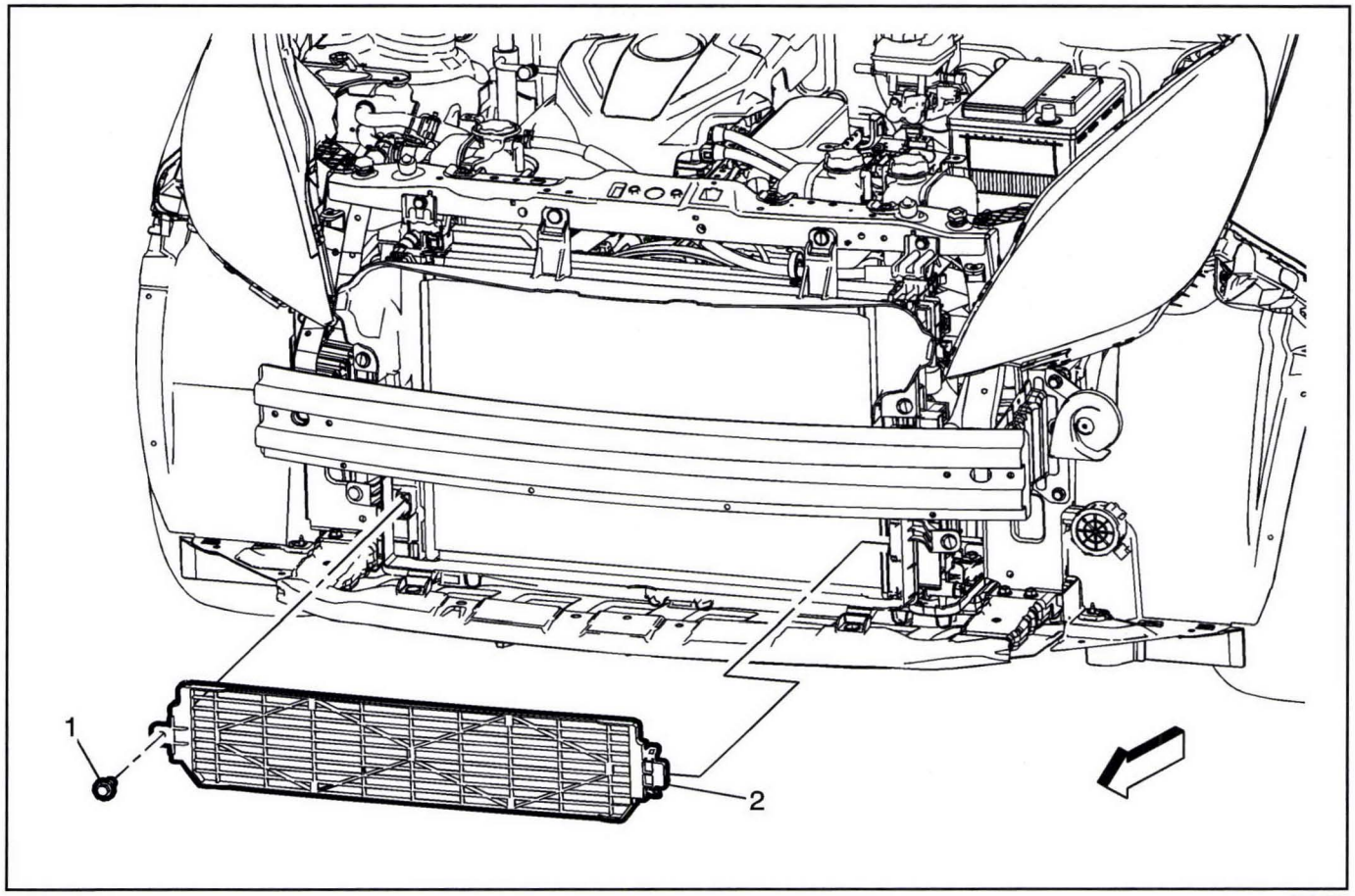

3221516

Radiator Grille Guard Replacement

Callout	Component Name
Preliminary Procedure Remove the front bumper fascia. Refer to *Front Bumper Fascia Replacement on page 3-57*.	
1	Radiator Grille Guard Bolt **Caution:** Refer to *Fastener Caution on page 0-8*.
2	Radiator Grille Guard

Radiator Air Lower Baffle and Deflector Replacement (Air Baffle Lower)

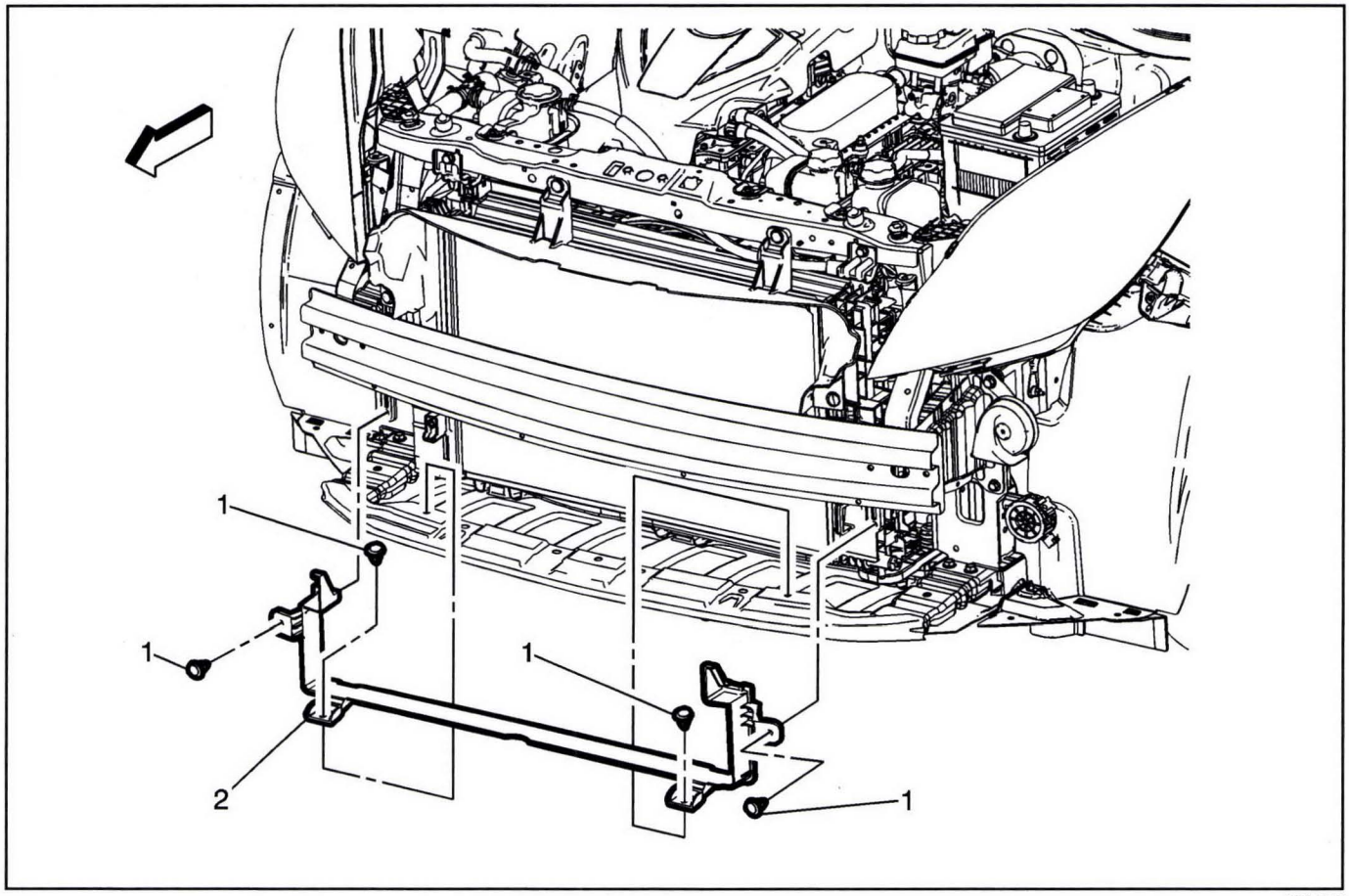

3221520

Radiator Air Lower Baffle and Deflector Replacement (Air Baffle Lower)

Callout	Component Name
Preliminary Procedure Remove the front bumper fascia. Refer to *Front Bumper Fascia Replacement on page 3-57*.	
1	Radiator Air Lower Baffle Retainers (Qty 4)
2	Radiator Air Lower Baffle

Radiator Air Upper Baffle and Deflector Replacement (Air Baffle Upper)

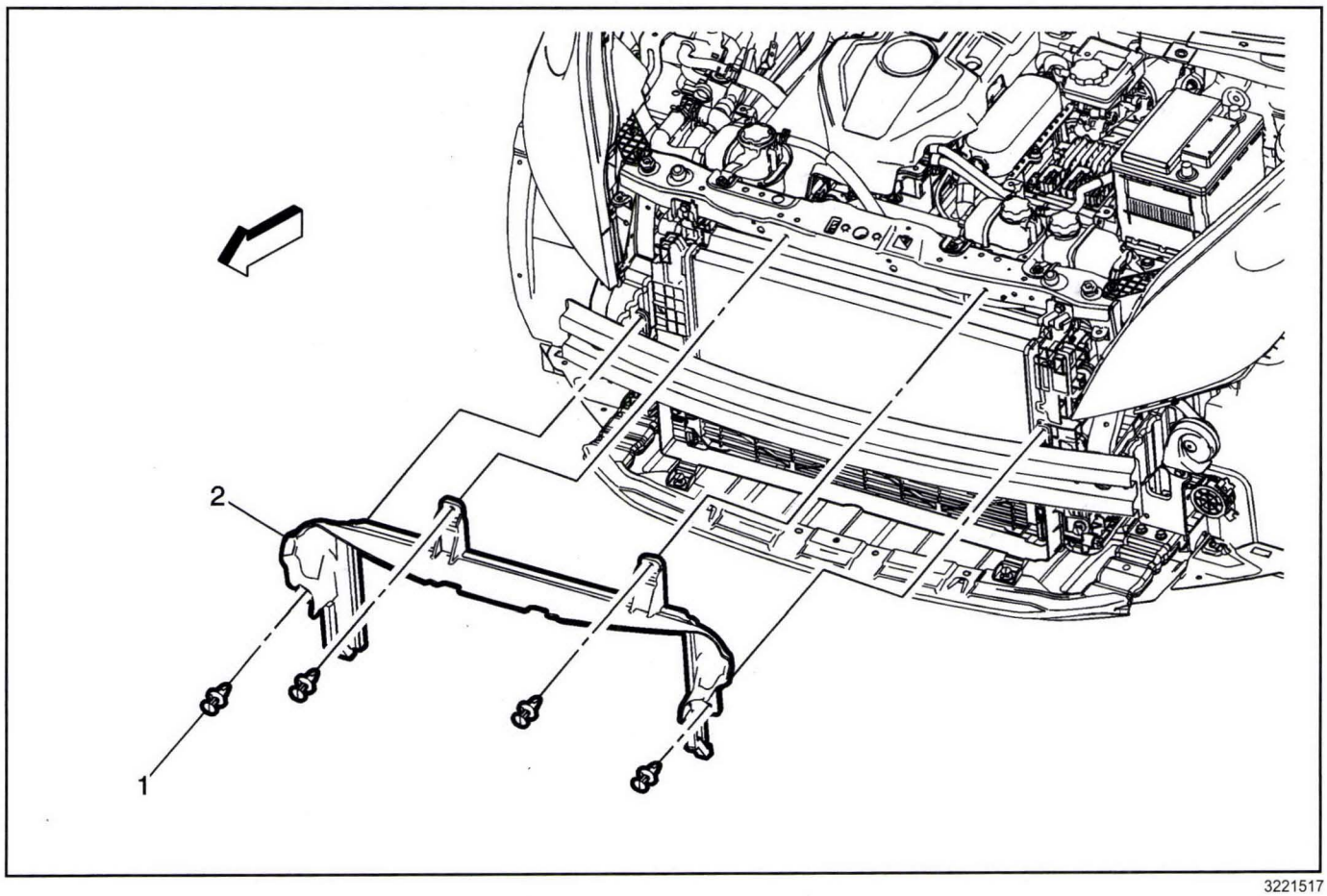

3221517

Radiator Air Upper Baffle and Deflector Replacement (Air Baffle Upper)

Callout	Component Name
Preliminary Procedure Remove the front bumper fascia. Refer to *Front Bumper Fascia Replacement on page 3-57*.	
1	Radiator Air Upper Baffle Retainers (Qty 4)
2	Radiator Air Upper Baffle

Radiator Air Upper Baffle and Deflector Replacement (On Top of Radiator)

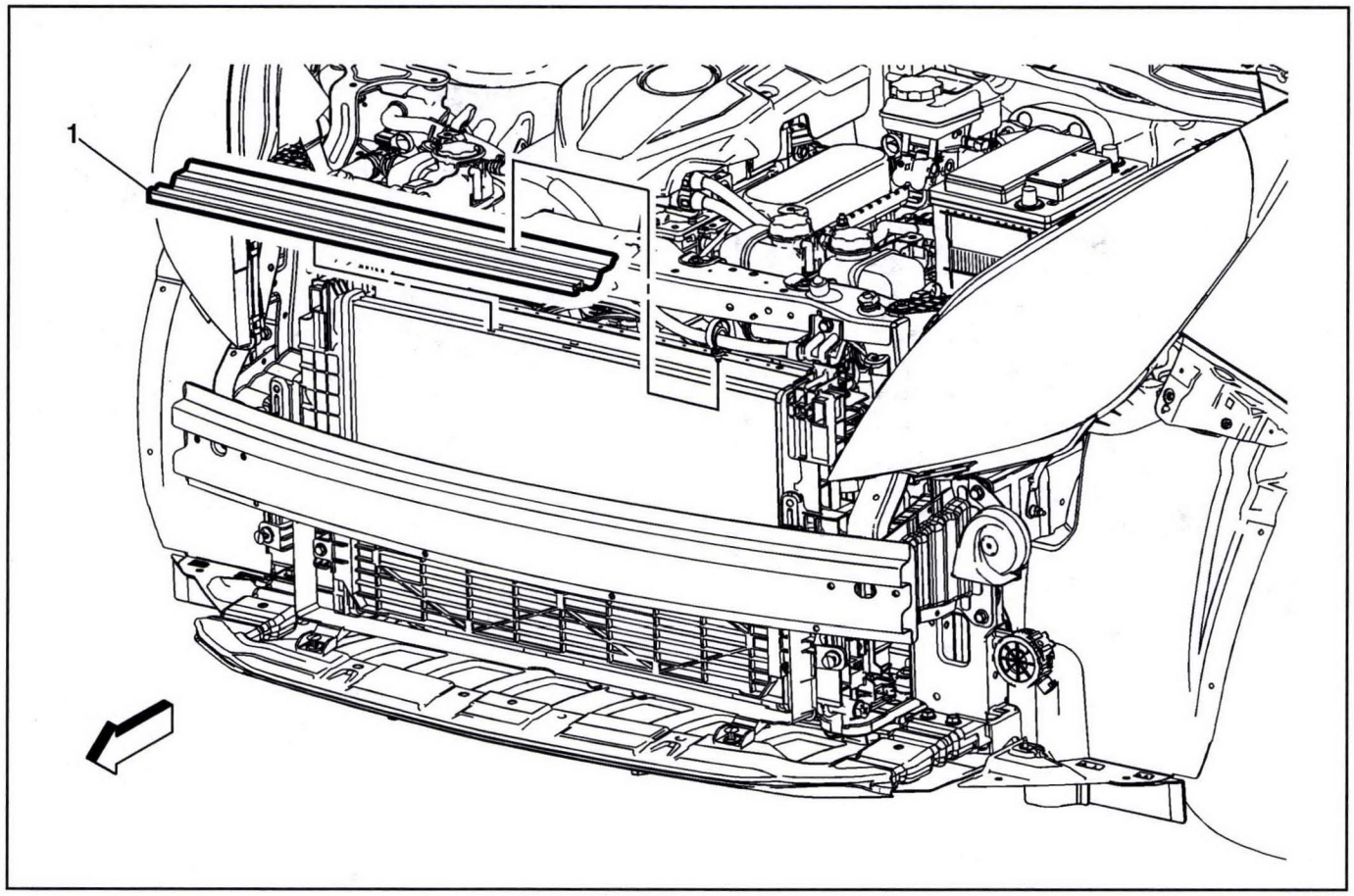

3221519

Radiator Air Upper Baffle and Deflector Replacement (On Top of Radiator)

Callout	Component Name
Preliminary Procedure Remove the Radiator Air Upper Baffle. Refer to *Radiator Air Upper Baffle and Deflector Replacement (Air Baffle Upper) on page 9-302* or *Radiator Air Upper Baffle and Deflector Replacement (On Top of Radiator) on page 9-303*.	
1	Radiator Air Upper Baffle **Procedure** Unclip the radiator overflow hose retainer from the radiator air upper baffle. Refer to *Radiator Overflow Hose Replacement on page 9-282*.

Battery Distribution Fuse Block Replacement

Removal Procedure

Danger: Always perform the High Voltage Disabling procedure prior to servicing any High Voltage component or connection. Personal Protection Equipment (PPE) and proper procedures must be followed.

The High Voltage Disabling procedure includes the following steps:

- ***Identify how to disable high voltage.***
- ***Identify how to test for the presence of high voltage.***
- ***Identify condition under which high voltage is always present and personal protection equipment (PPE) and proper procedures must be followed.***

Before working on any high voltage system, be sure to wear the following Personal Protection Equipment:

- ***Safety glasses with appropriate side shields when within 15 meters (50 feet) of the vehicle, either indoors or outdoors.***
- ***Certified and up-to-date Class "0" Insulation gloves rated at 1000V with leather protectors.***
  - ***Visually and functionally inspect the gloves before use.***
  - ***Wear the Insulation gloves with leather protectors at all times when working with the high voltage battery assembly, whether the system is energized or not.***

Failure to follow the procedures may result in serious injury or death.

1. Remove the drive motor battery. Refer to *Drive Motor Battery Replacement and Shipping Preparation on page 9-524*.
2. Remove the drive motor battery cover. Refer to *Drive Motor Battery Cover Replacement on page 9-449*.

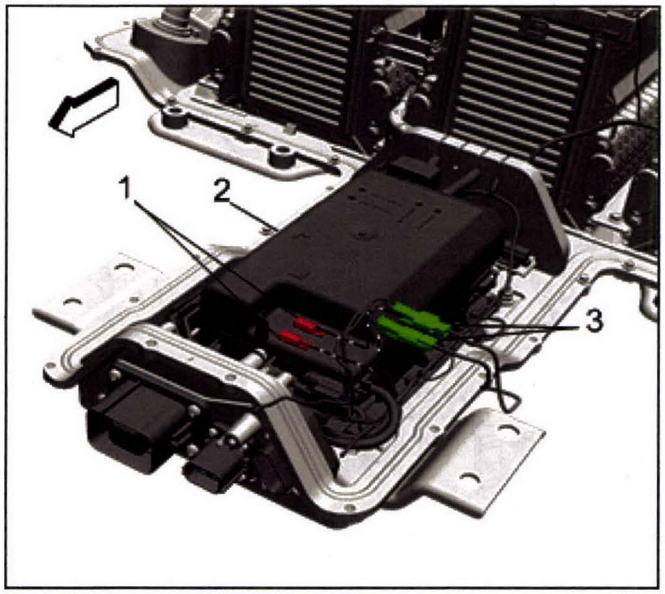

3707863

3. Unclip the connectors (3), from the retainer clips (1), on top of the drive motor battery high voltage contactor cover (2).

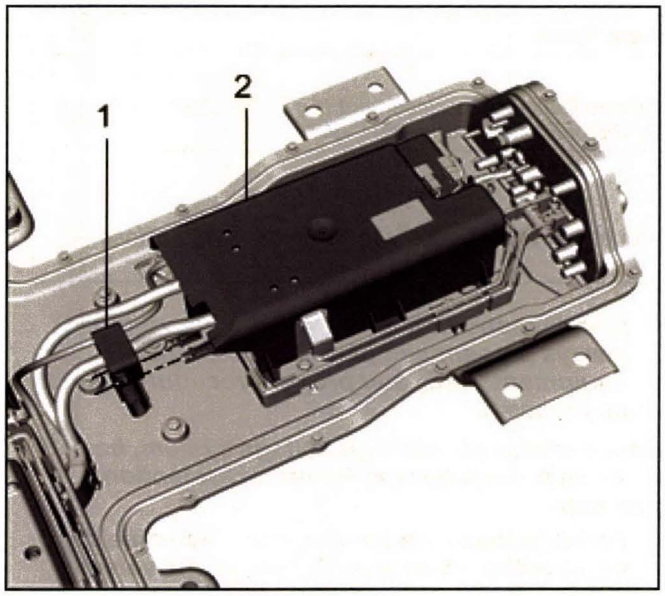

3796348

4. Detach the current sensor (1) from the drive motor battery high voltage contactor cover.

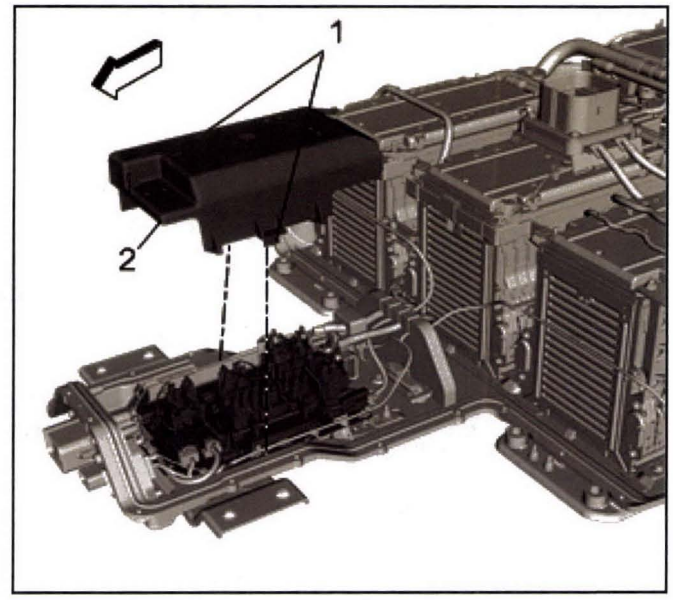

3707867

5. Using an appropriate tool, release the retaining tabs (1) and remove the drive motor battery high voltage contactor cover (2).

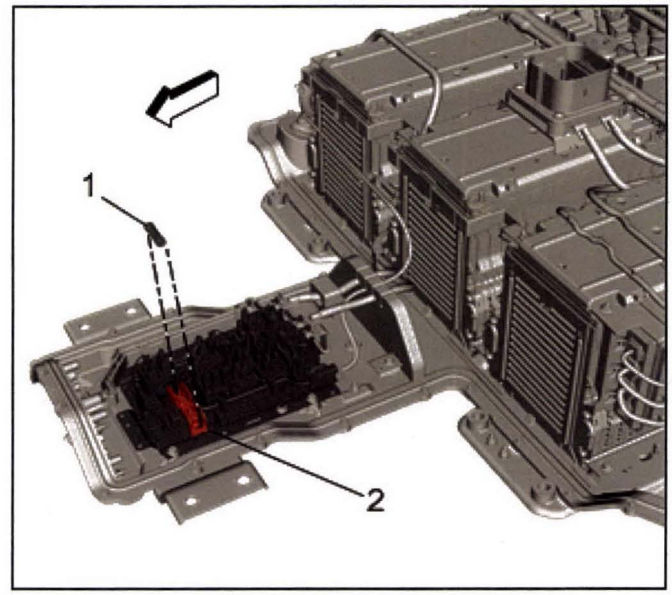

3712074

6. Remove the battery heater fuse (1) from the fuse holder (2).

Installation Procedure

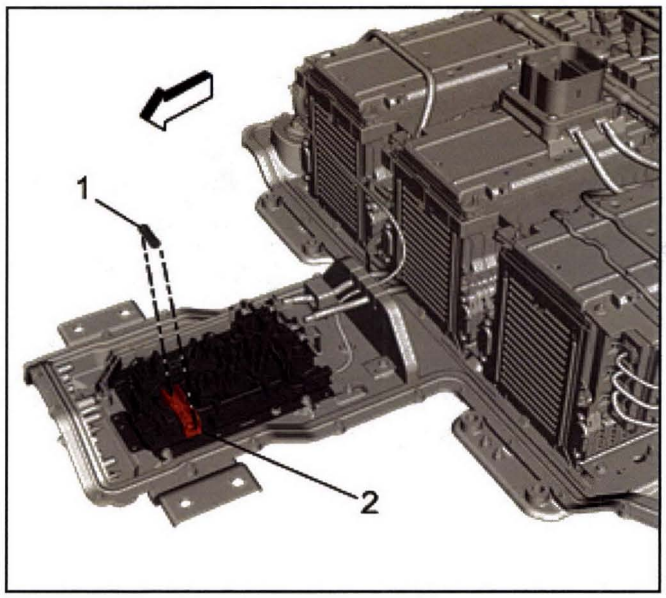

3712074

1. Install the battery heater fuse (1) into the fuse holder (2).

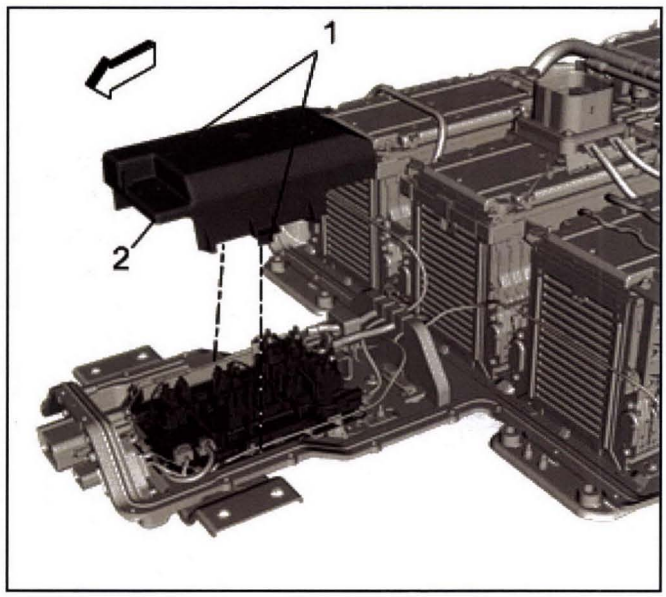

3707867

2. Install the drive motor battery high voltage contactor cover (2) with the retaining tabs (1).

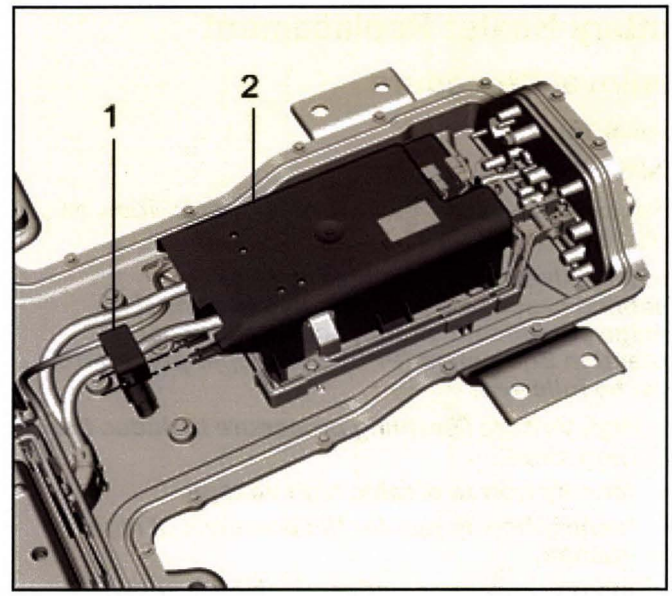

3796348

3. Attach the current sensor (1) to the drive motor battery high voltage contactor cover (2).

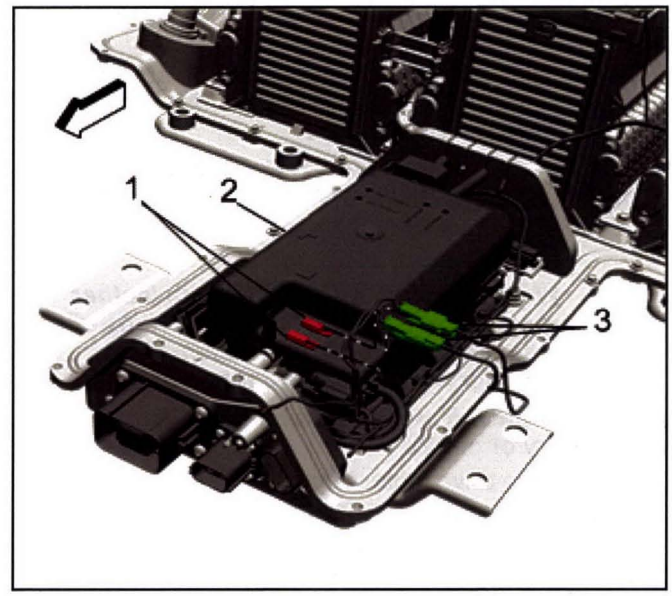

3707863

4. Install the connectors (3) into the retainer clips (1) on the drive motor battery high voltage contactor cover (2).
5. Install the drive motor battery cover. Refer to *Drive Motor Battery Cover Replacement on page 9-449*.
6. Install the drive motor battery. Refer to *Drive Motor Battery Replacement and Shipping Preparation on page 9-524*.

Battery Heater Replacement

Removal Procedure

Special Tools

BO-38185 Hose Clamp Pliers

For equivalent regional tools, refer to *Special Tools on page 10-77*.

Danger: Always perform the High Voltage Disabling procedure prior to servicing any High Voltage component or connection. Personal Protection Equipment (PPE) and proper procedures must be followed.

The High Voltage Disabling procedure includes the following steps:

- ***Identify how to disable high voltage.***
- ***Identify how to test for the presence of high voltage.***
- ***Identify condition under which high voltage is always present and personal protection equipment (PPE) and proper procedures must be followed.***

Before working on any high voltage system, be sure to wear the following Personal Protection Equipment:

- ***Safety glasses with appropriate side shields when within 15 meters (50 feet) of the vehicle, either indoors or outdoors.***
- ***Certified and up-to-date Class "0" Insulation gloves rated at 1000V with leather protectors.***
  - ***Visually and functionally inspect the gloves before use.***
  - ***Wear the Insulation gloves with leather protectors at all times when working with the high voltage battery assembly, whether the system is energized or not.***

Failure to follow the procedures may result in serious injury or death.

1. Remove the drive motor battery. Refer to *Drive Motor Battery Replacement and Shipping Preparation on page 9-524*.
2. Remove the drive motor battery cover. Refer to *Drive Motor Battery Cover Replacement on page 9-449*.

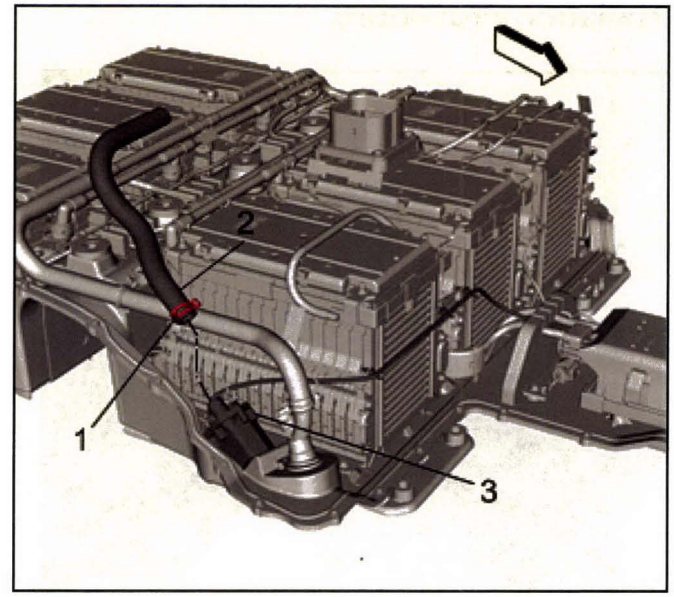

3703764

Note: Remove the coolant from the battery pack internal components prior to disconnecting the hose connections.

3. Reposition the cell battery cooling manifold inlet hose clamp (1), using *BO-38185* hose clamp pliers.
4. Remove the cell battery cooling manifold inlet hose (2) from the high voltage battery heater (3).

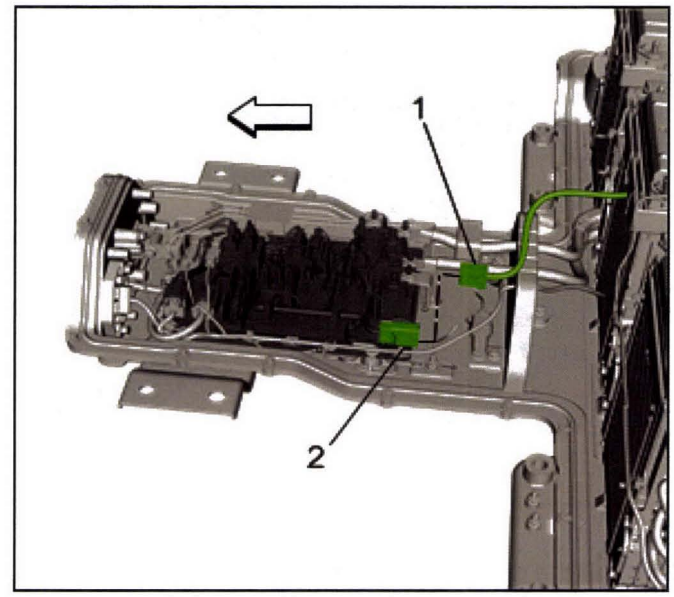

3711561

5. Disconnect the battery heater connector (1) to the connector (2) on the drive motor battery positive high voltage contactor assembly.

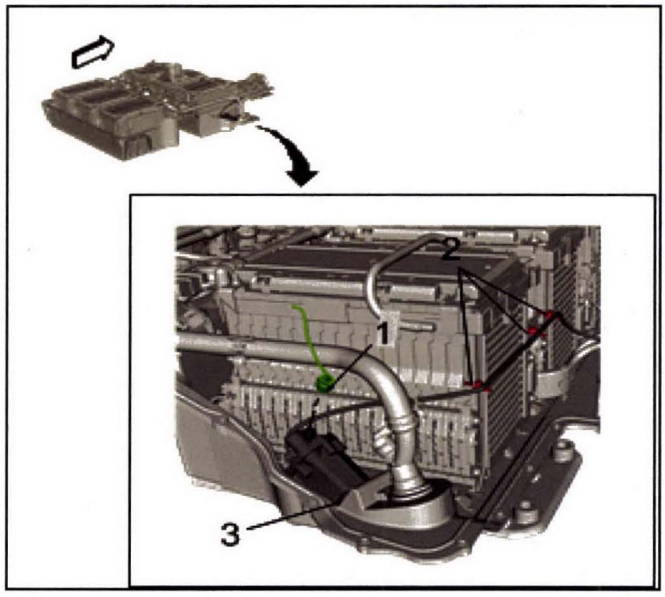

3711557

6. Disconnect the battery heater connector (1) and remove the battery heater harness retainers (2).

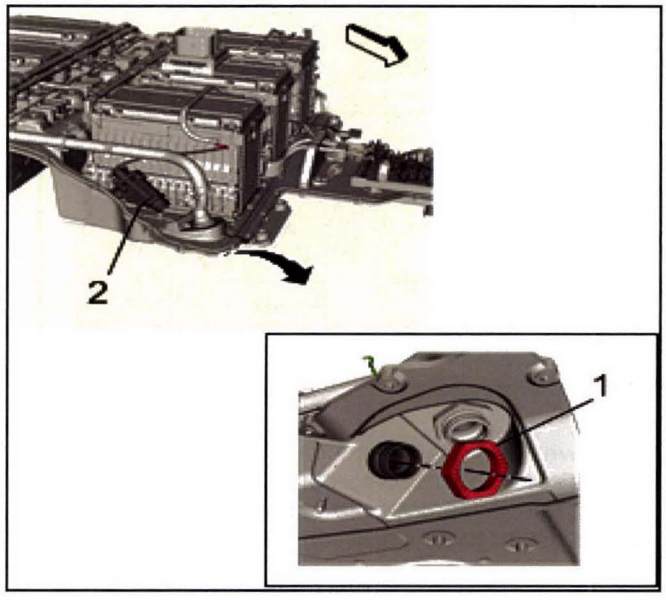

3711566

7. Remove the battery heater fastener (1) and remove the battery heater (2) with the pigtail harness.

Installation Procedure

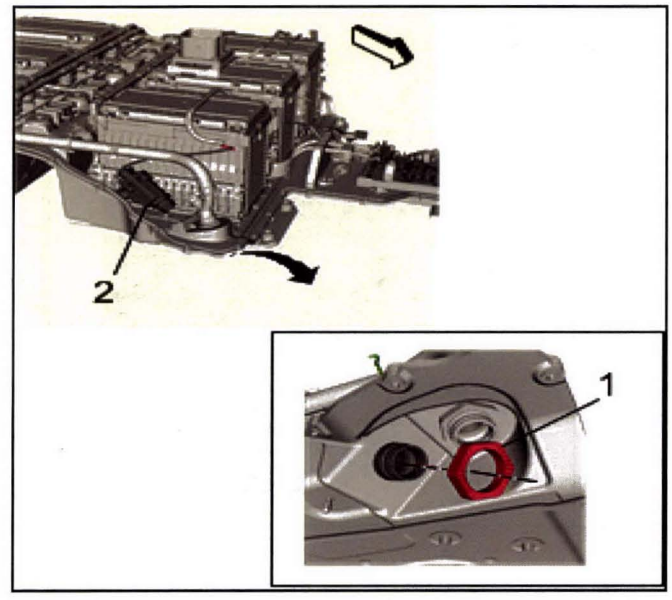

3711566

Caution: Refer to *Fastener Caution on page 0-8*.

1. Install the battery heater (2) and tighten the fastener (1) to **27 N•m (20 lb ft)**.

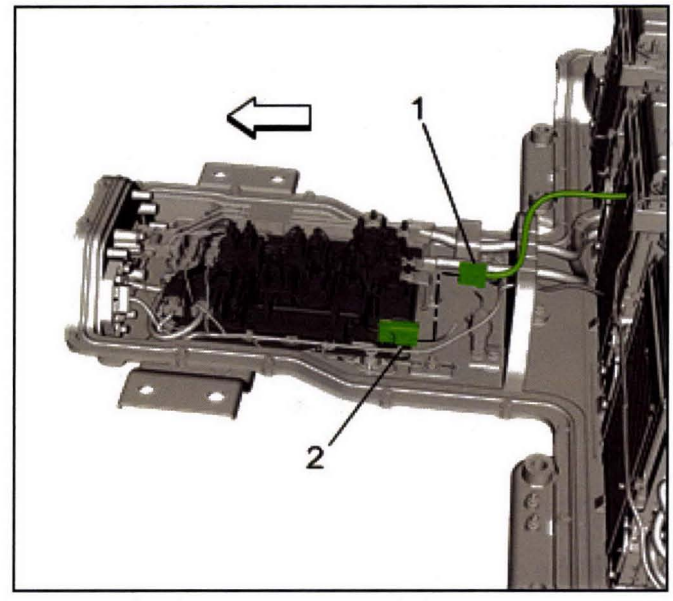

3711561

2. Connect the battery heater connector (2) to the drive motor battery positive high voltage contactor connector (2).

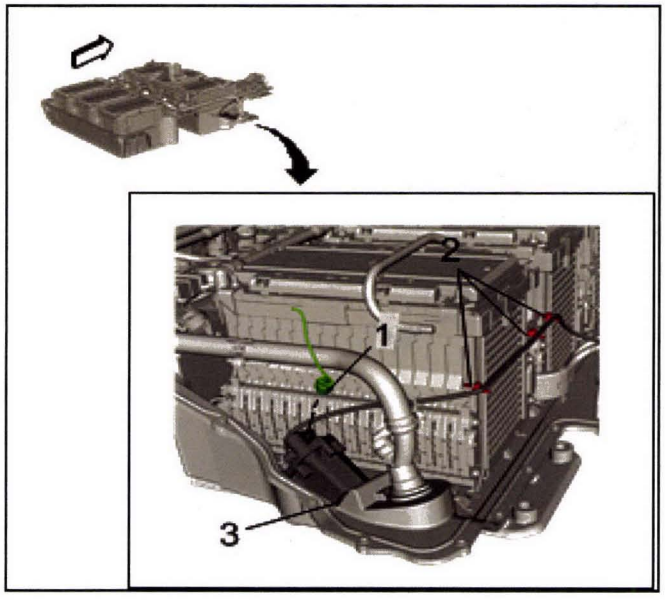

3711557

3. Install the harness retainers (2) and connect the connector (1) to the battery heater.

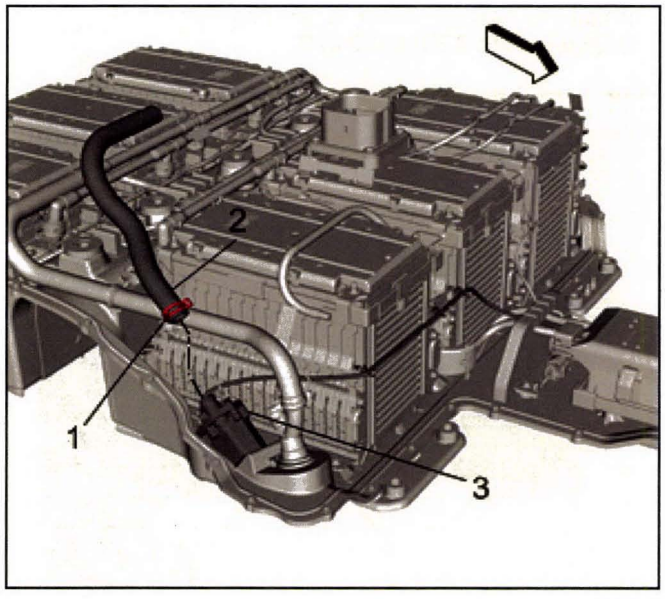

3703764

4. Install the cell battery cooling manifold inlet hose (2) to the high voltage battery heater (3).
5. Position the cell battery cooling manifold inlet hose clamp (1), using *BO-38185* hose clamp pliers.
6. Install the drive motor battery cover. Refer to *Drive Motor Battery Cover Replacement on page 9-449*.
7. Install the drive motor battery. Refer to *Drive Motor Battery Replacement and Shipping Preparation on page 9-524*.

Drive Motor Battery Coolant Cooler Replacement

Removal Procedure

Danger: Before conducting any repair to this high voltage cooling system, it is necessary to determine/verify whether no high-voltage system faults exist. If high-voltage faults exist, follow published DTC diagnostics/repair procedures prior to performing any cooling system repairs. Failure to correct High Voltage Faults before working on the high voltage cooling system could result in personal injury or death.

1. Turn vehicle power OFF and remove all keyless entry transmitters from the vehicle and secure in a place outside the vehicle.

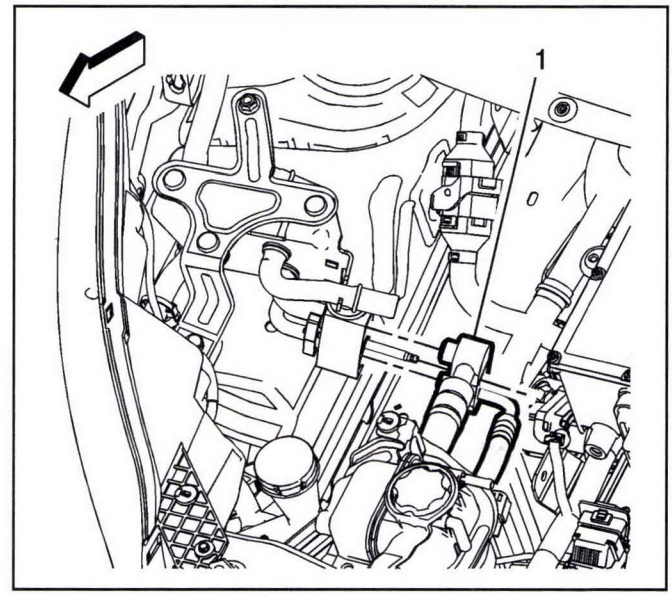

3238999

2. Remove the air conditioning compressor hose and the air conditioning compressor and condenser hose (1) from the drive motor battery coolant cooler. Refer to *Air Conditioning Compressor and Condenser Hose Replacement on page 10-32*.

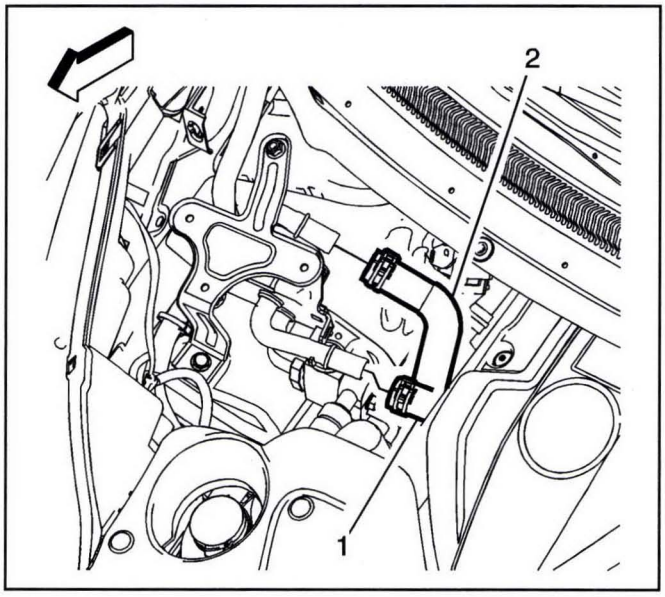

3239000

3. Remove the drive motor battery coolant cooler inlet hose from the drive motor battery coolant cooler (1). Refer to *Drive Motor Battery Coolant Cooler Inlet Hose Replacement (RESS From 4way V/V(C) To Chiller) on page 9-335*.
4. Remove the drive motor battery radiator outlet hose from the drive motor battery coolant cooler (2). Refer to *Drive Motor Battery Radiator Outlet Hose Replacement on page 9-334*.

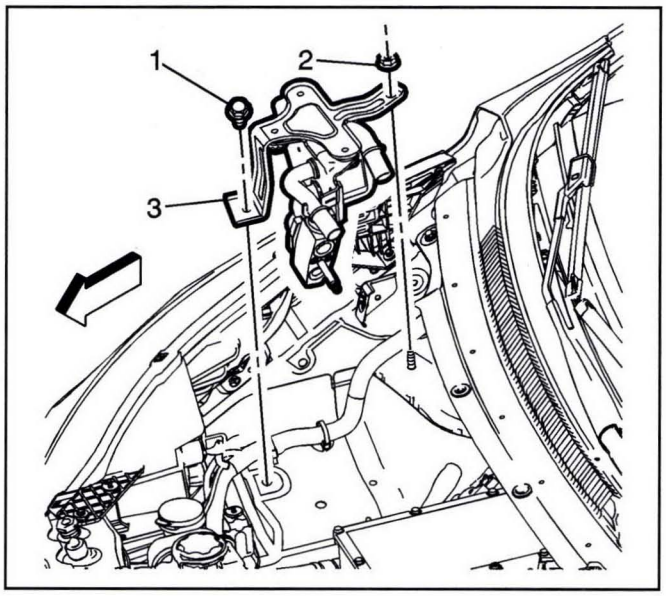

3239003

5. Remove the drive motor battery coolant cooler bolt (1) from the drive motor battery coolant cooler bracket.
6. Remove the drive motor battery coolant cooler nut (2) from the drive motor battery coolant cooler bracket.
7. Remove the drive motor battery coolant cooler and bracket (3) from the vehicle.

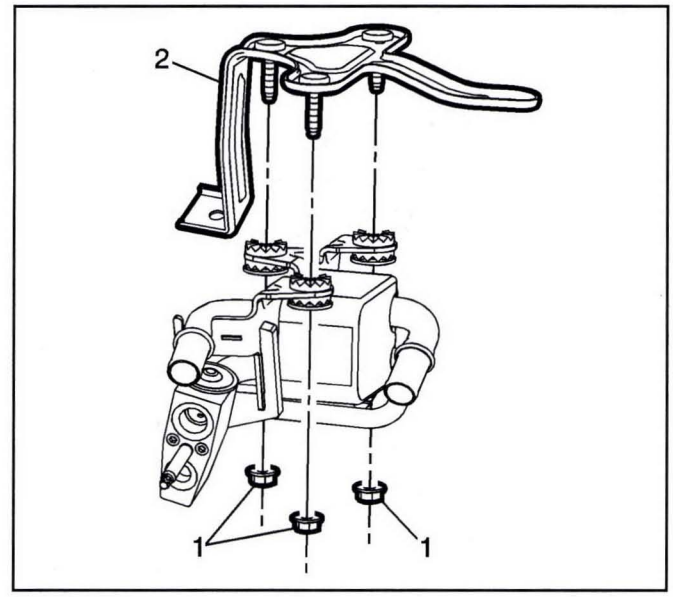

3239005

8. Remove the drive motor battery coolant cooler bracket nuts (1) from the drive motor battery coolant cooler.
9. Remove the drive motor battery coolant cooler bracket (2) from the drive motor battery coolant cooler.

Installation Procedure

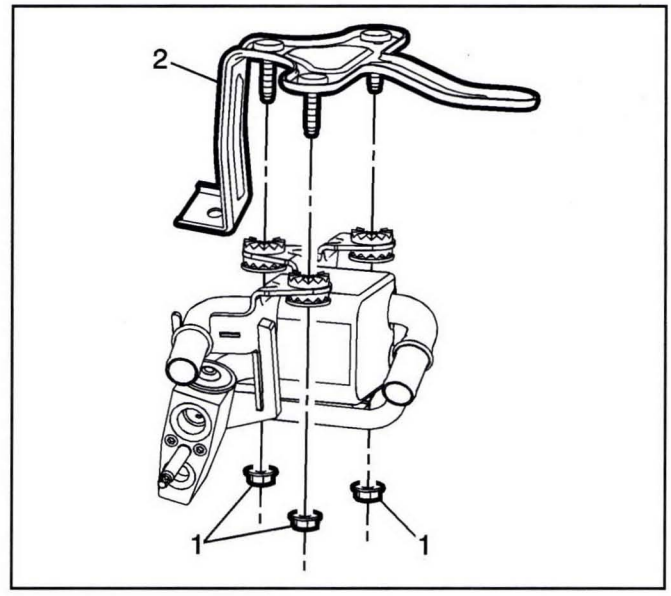

3239005

1. Install the drive motor battery coolant cooler bracket (2) to the drive motor battery coolant cooler.

Caution: Refer to *Fastener Caution on page 0-8*.

2. Install the drive motor battery coolant cooler bracket nuts (1) to the drive motor battery coolant cooler and tighten to **9** N•m **(80 lb in)**.

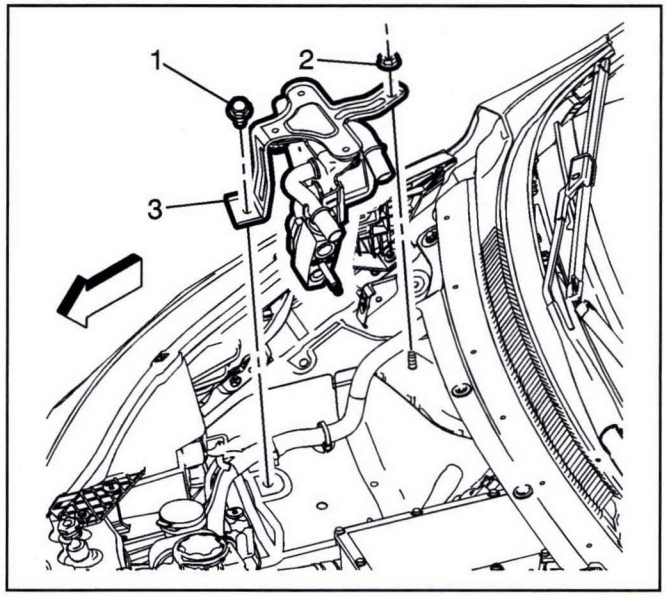

3239003

3. Install the drive motor battery coolant cooler and bracket (3) to the vehicle.
4. Install the drive motor battery coolant cooler nut (2) to the drive motor battery coolant cooler bracket and tighten to **22 N•m (16 lb ft)**.
5. Install the drive motor battery coolant cooler bolt (1) to the drive motor battery coolant cooler bracket and tighten to **22 N•m (16 lb ft)**.

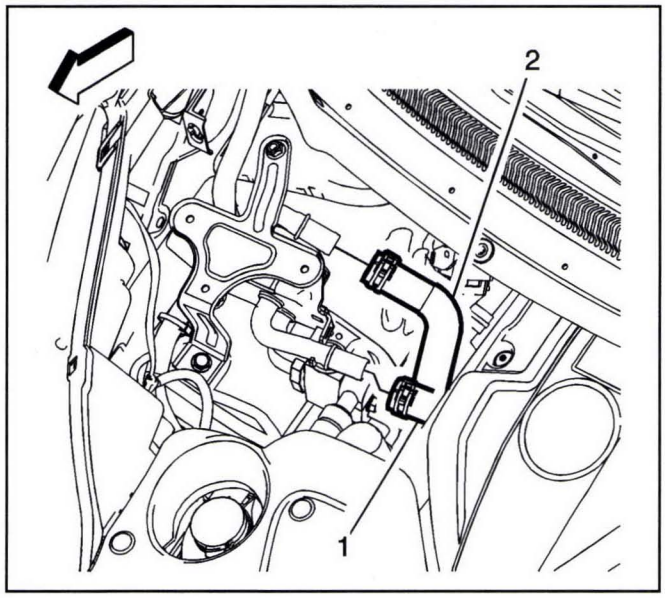

3239000

6. Install the drive motor battery radiator outlet hose to the drive motor battery coolant cooler (2). Refer to *Drive Motor Battery Radiator Outlet Hose Replacement on page 9-334*.
7. Install the drive motor battery coolant cooler inlet hose to the drive motor battery coolant cooler (1). Refer to *Drive Motor Battery Coolant Cooler Inlet Hose Replacement (RESS From 4way V/V(C) To Chiller) on page 9-335*.

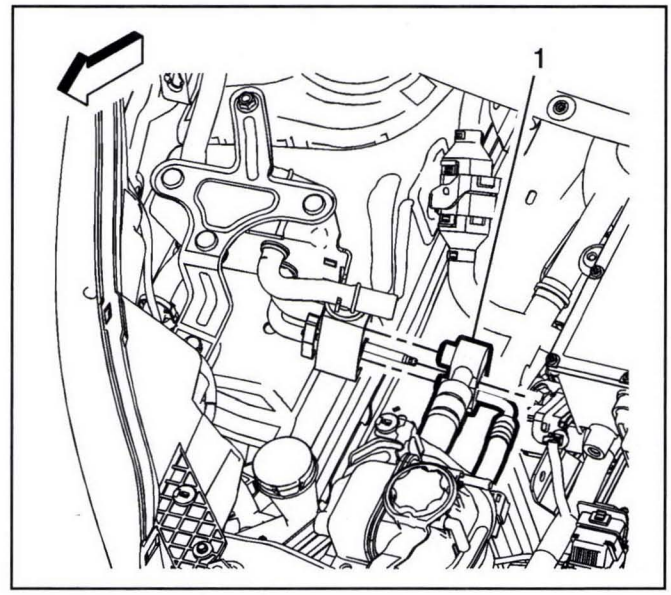

3238999

8. Install the air conditioning compressor hose and the air conditioning compressor and condenser hose (1) to the drive motor battery coolant cooler. Refer to *Air Conditioning Compressor and Condenser Hose Replacement on page 10-32*.

Drive Motor Battery Coolant Cooler Bracket Replacement

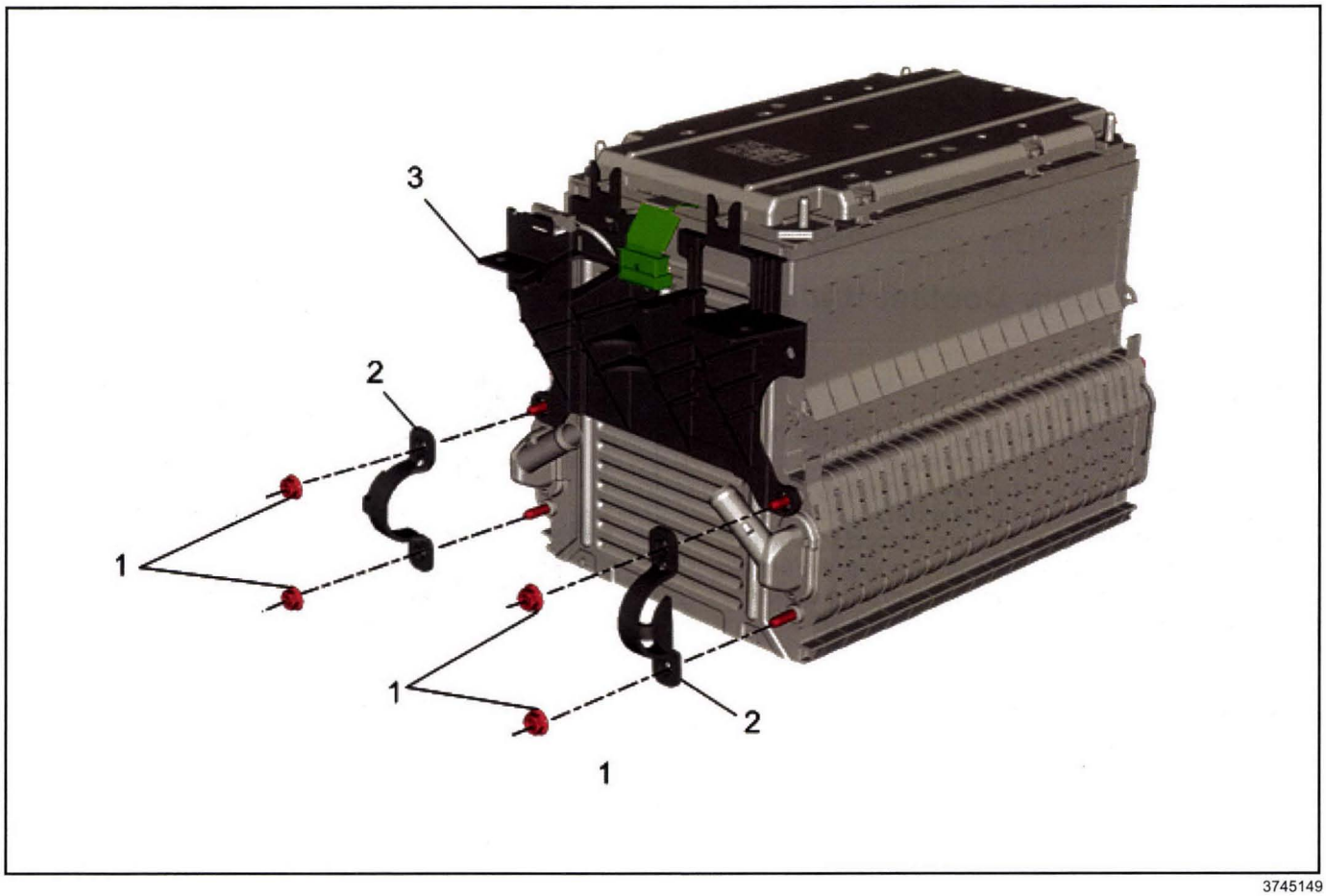

3745149

Drive Motor Battery Coolant Cooler Bracket Replacement

Callout	Component Name

Danger: Ensure all High Voltage safety procedures are followed. Failure to follow the procedure exactly as written may result in serious injury or death.

Danger: Before working on any high voltage system, be sure to wear the following Personal Protection Equipment:

- ***Safety glasses with appropriate side shields when within 50 feet of the vehicle, either indoors or outdoors***
- ***Certified and up-to-date Class "0" Insulation gloves rated at 1000V with leather protectors***
  - ***Visually and functionally inspect the gloves before use.***
  - ***Wear the Insulation gloves at all times when working with the high voltage battery assembly, whether the system is energized or not.***

Failure to follow the procedure exactly as written may result in serious injury or death.

Preliminary Procedure

1. Remove the drive motor battery. Refer to *Drive Motor Battery Replacement and Shipping Preparation on page 9-524*.
2. Remove the drive motor battery cover. Refer to *Drive Motor Battery Cover Replacement on page 9-449*.
3. Remove the battery cell. Refer to *Cell Battery Replacement (Battery Cell 1) on page 9-462* or *Cell Battery Replacement (Battery Cell 2) on page 9-467* or *Cell Battery Replacement (Battery Cell 3) on page 9-473* or *Cell Battery Replacement (Battery Cell 4) on page 9-479* or *Cell Battery Replacement (Battery Cell 5) on page 9-485* or *Cell Battery Replacement (Battery Cell 6) on page 9-490*.
4. Remove the cell battery cooling manifold inlet hose. Refer to *High Voltage Battery Cooling Manifold Inlet Hose Replacement (Coolant to all Battery Cells) on page 9-336* or *High Voltage Battery Cooling Manifold Inlet Hose Replacement (Individual Battery Cell Coolant Inlet Hose) on page 9-338*.
5. Remove the cell battery cooling manifold outlet hose. Refer to *High Voltage Battery Cooling Manifold Outlet Hose Replacement (Coolant to all Battery Cells) on page 9-339* or *High Voltage Battery Cooling Manifold Outlet Hose Replacement (Individual Battery Cell Coolant Outlet Hose) on page 9-342*.

Drive Motor Battery Coolant Cooler Bracket Replacement (cont'd)

Callout	Component Name
1	Drive Motor Battery Coolant Cooler Bracket Fasteners (Qty: 4) **Caution:** Refer to *Fastener Caution on page 0-8.* **Tighten** 9 N•m (80 lb in)
2	Cell Battery Cooling Manifold Hose Brackets (Qty: 2)
3	Drive Motor Battery Coolant Cooler Bracket

Drive Motor Battery Coolant Radiator Replacement

Removal Procedure

Danger: Before conducting any repair to this high voltage cooling system, it is necessary to determine/verify whether no high-voltage system faults exist. If high-voltage faults exist, follow published DTC diagnostics/repair procedures prior to performing any cooling system repairs. Failure to correct High Voltage Faults before working on the high voltage cooling system could result in personal injury or death.

1. Turn Vehicle Power Off and remove all keyless entry transmitters from the vehicle and secure in a place outside the vehicle.
2. Drain the drive motor battery cooling system. Refer to *Drive Motor Battery Cooling System Draining and Filling on page 9-257*
3. Remove the front bumper impact bar. Refer to *Front Bumper Impact Bar Replacement on page 3-55.*
4. Remove the radiator air upper and lower baffles and deflectors from the drive motor battery coolant radiator. Refer to *Radiator Air Upper Baffle and Deflector Replacement (Air Baffle Upper) on page 9-302* or *Radiator Air Upper Baffle and Deflector Replacement (On Top of Radiator) on page 9-303* and *Radiator Air Lower Baffle and Deflector Replacement (Air Baffle Lower) on page 9-301.*
5. Remove the left radiator upper bracket from the drive motor battery coolant radiator. Refer to *Radiator Upper Bracket Replacement on page 9-289.*

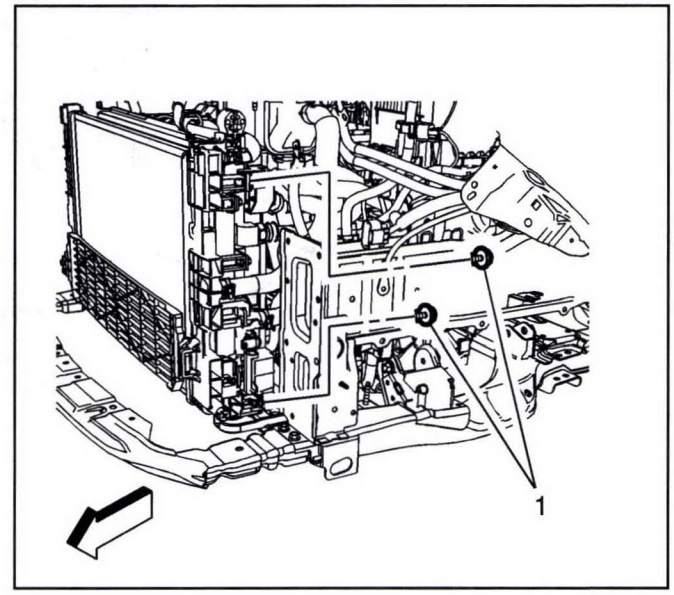

3358510

6. Remove the engine coolant fan and shroud bolts (1) from the left side

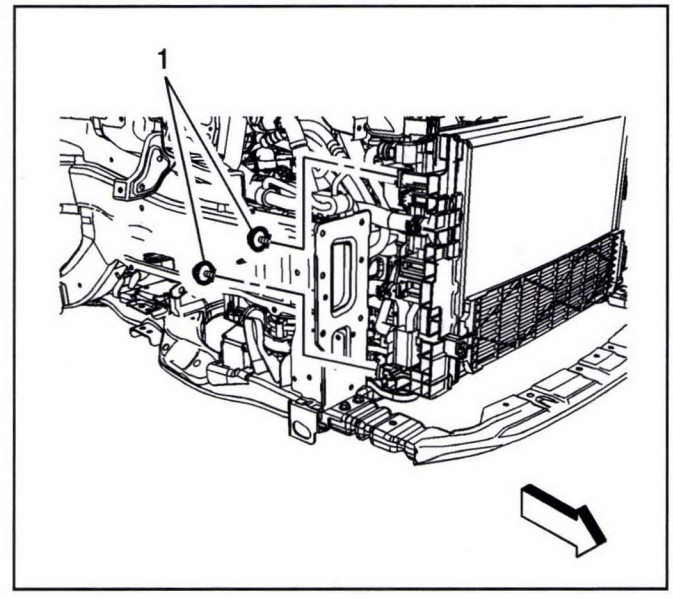

3358508

7. Remove the engine coolant fan and shroud bolts (1) from the right side.

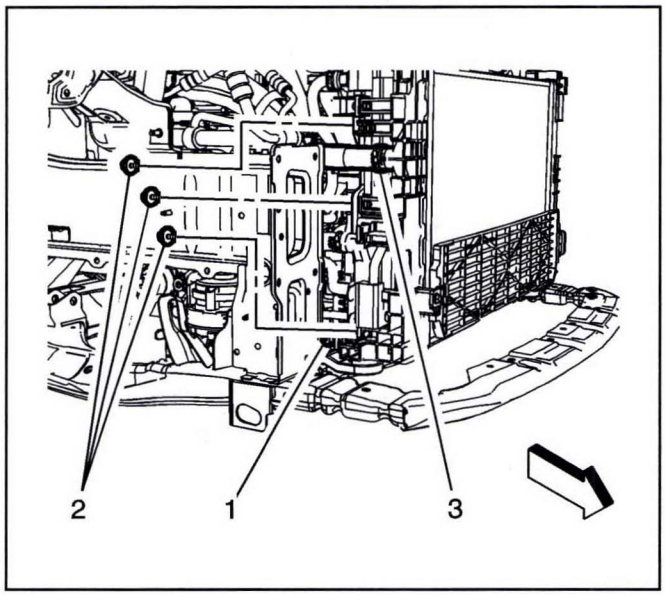

3358512

8. Move the cooling fan and shroud assembly (1) rearward to get the access to the radiator bolt.
9. Remove the drive motor battery coolant radiator bolts (2) from the left side.
10. Disconnect the drive motor battery coolant outlet hose (3) from the drive motor battery coolant radiator. Refer to *Drive Motor Battery Coolant Cooler Outlet Hose Replacement (From the Coolant Flow Valve to Radiator) on page 9-316* or *Drive Motor Battery Coolant Cooler Outlet Hose Replacement (From RESS to Outlet Long Pipe) on page 9-317*.

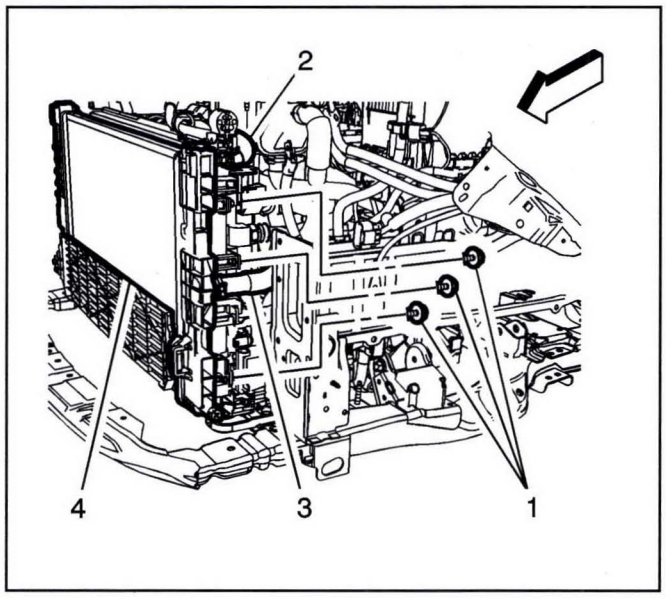

3358514

11. Remove the drive motor battery coolant radiator bolts (1) from the right side.
12. Disconnect the radiator overflow hose (2) from the drive motor battery coolant radiator. Refer to *Radiator Overflow Hose Replacement on page 9-282*.
13. Disconnect the drive motor battery coolant inlet hose (3) from the drive motor battery coolant radiator. Refer to *Drive Motor Battery Coolant Inlet Hose Replacement (From RESS to Inlet Long Pipe) on page 9-321* or *Drive Motor Battery Coolant Inlet Hose Replacement (From Water Pump to Drive Motor Battery Coolant Inlet Pipe Long) on page 9-322* or *Drive Motor Battery Coolant Inlet Hose Replacement (Outlet Hose Connector to Radiator) on page 9-323*.
14. Remove the drive motor battery coolant radiator (4) from the vehicle.

Installation Procedure

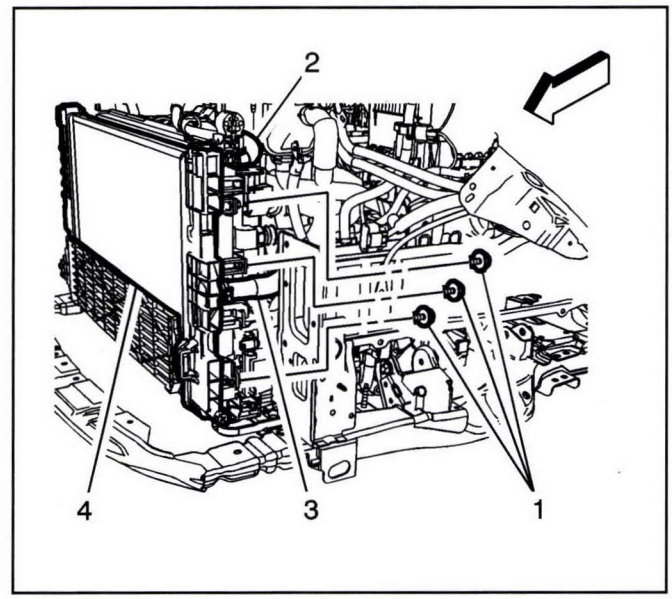

3358514

1. Install the drive motor battery coolant radiator (4) on the vehicle.
2. Connect the drive motor battery coolant inlet hose (3) to the drive motor battery coolant radiator. Refer to *Drive Motor Battery Coolant Inlet Hose Replacement (From RESS to Inlet Long Pipe) on page 9-321* or *Drive Motor Battery Coolant Inlet Hose Replacement (From Water Pump to Drive Motor Battery Coolant Inlet Pipe Long) on page 9-322* or *Drive Motor Battery Coolant Inlet Hose Replacement (Outlet Hose Connector to Radiator) on page 9-323*.
3. Connect the radiator overflow hose (2) to the drive motor battery coolant radiator. Refer to *Radiator Overflow Hose Replacement on page 9-282*.

Caution: Refer to *Fastener Caution on page 0-8*.

4. Install the drive motor battery coolant radiator bolts (1) to the right side and tighten.

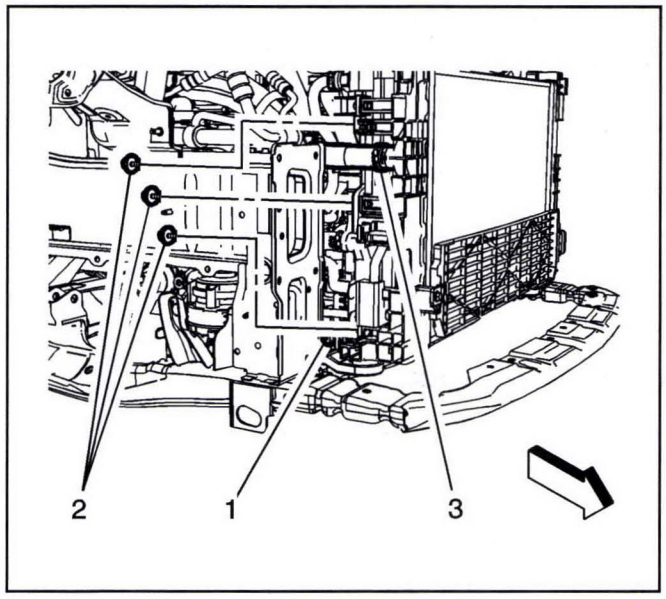

3358512

5. Connect the drive motor battery coolant outlet hose (3) to the drive motor battery coolant radiator. Refer to *Drive Motor Battery Coolant Cooler Outlet Hose Replacement (From the Coolant Flow Valve to Radiator) on page 9-316* or *Drive Motor Battery Coolant Cooler Outlet Hose Replacement (From RESS to Outlet Long Pipe) on page 9-317*.
6. Install the drive motor battery coolant radiator bolts (2) to the left side and tighten.
7. Align the cooling fan and shroud assembly (1) into the radiator.

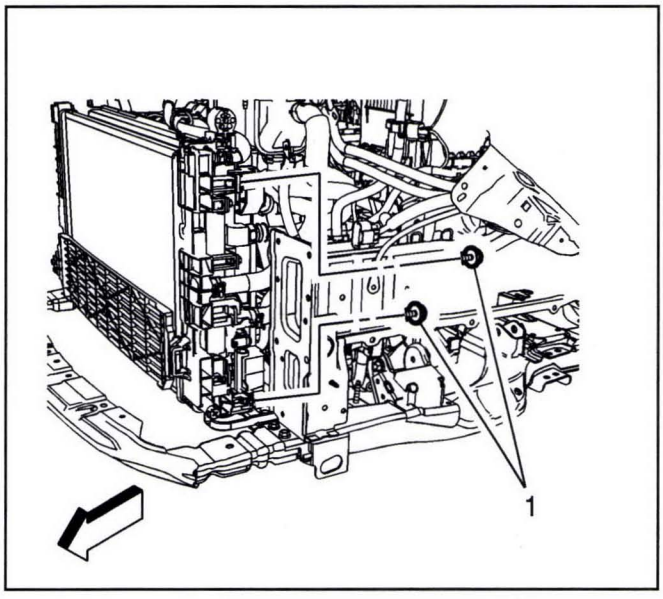

3358510

8. Install the engine coolant fan and shroud bolts (1) to the left side and tighten to **6** N•m **(53 lb in)**.

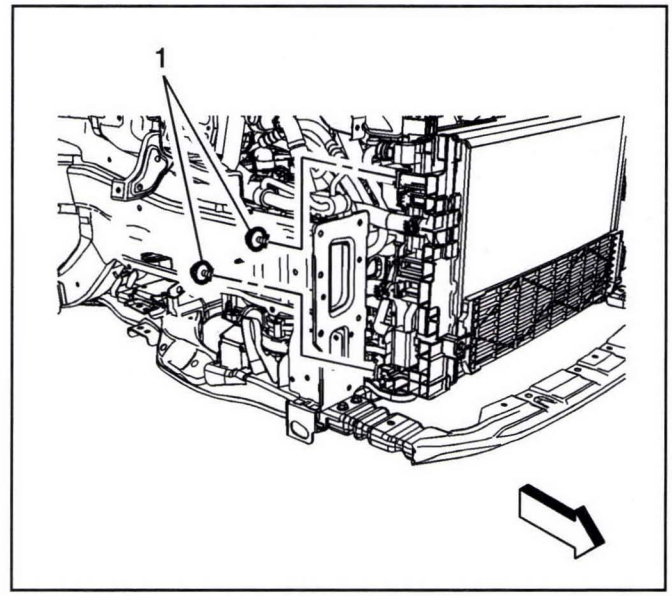

3358508

9. Install the engine coolant fan and shroud bolts (1) to the right side and tighten to **6** N•m **(53 lb in)**.
10. Install the left radiator upper bracket to the drive motor battery coolant radiator. Refer to *Radiator Upper Bracket Replacement on page 9-289*.
11. Install the radiator air upper and lower baffles and deflectors to the drive motor battery coolant radiator. Refer to *Radiator Air Upper Baffle and Deflector Replacement (Air Baffle Upper) on page 9-302* or *Radiator Air Upper Baffle and Deflector Replacement (On Top of Radiator) on page 9-303* and *Radiator Air Lower Baffle and Deflector Replacement (Air Baffle Lower) on page 9-301*.
12. Install the front bumper impact bar. Refer to *Front Bumper Impact Bar Replacement on page 3-55*.
13. Fill the drive motor battery cooling system. Refer to *Drive Motor Battery Cooling System Draining and Filling on page 9-257*.

Drive Motor Battery Coolant Pump Replacement

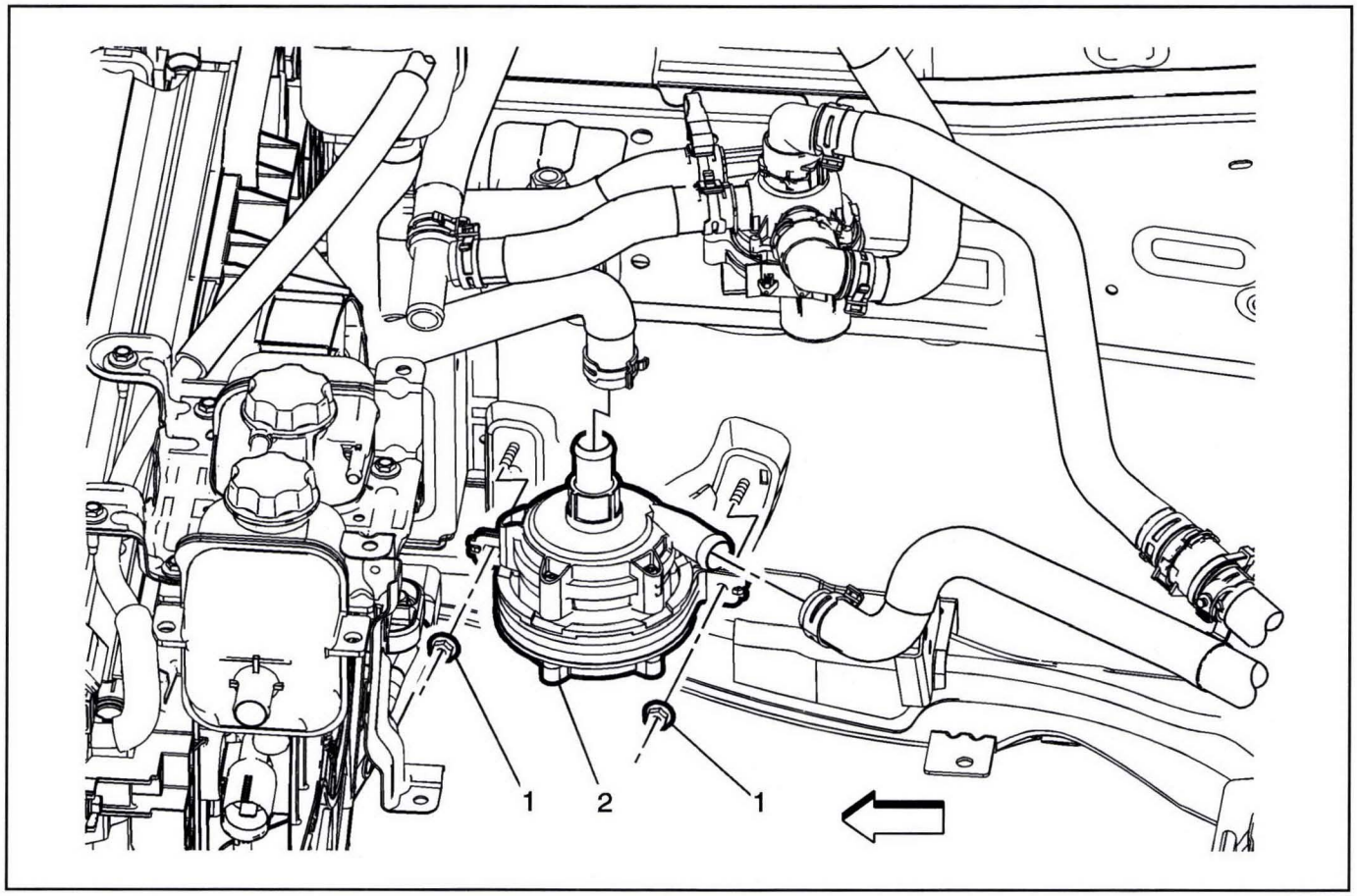

3229097

Drive Motor Battery Coolant Pump Replacement

Callout	Component Name
Danger: Before conducting any repair to this high voltage cooling system, it is necessary to determine/verify whether no high-voltage system faults exist. If high-voltage faults exist, follow published DTC diagnostics/repair procedures prior to performing any cooling system repairs. Failure to correct High Voltage Faults before working on the high voltage cooling system could result in personal injury or death.	
Preliminary Procedures 1. Turn vehicle power OFF and remove all keyless entry transmitters from the vehicle and secure in a place outside the vehicle. 2. Drain the coolant. Refer to *Drive Motor Battery Cooling System Draining and Filling on page 9-257*. 3. Remove the right front wheelhouse liner. Refer to *Front Wheelhouse Liner Replacement - Right Side on page 3-138*. 4. Remove the front compartment air deflector. Refer to *Front Compartment Air Deflector Replacement on page 3-125*. 5. Remove the drive motor battery radiator inlet hose from the drive motor battery coolant pump. Refer to *Drive Motor Battery Radiator Inlet Hose Replacement (RESS From Radiator Outlet to A/Separator) on page 9-329* or *Drive Motor Battery Radiator Inlet Hose Replacement (RESS From A/Separator To Water Pump) on page 9-331* or *Drive Motor Battery Radiator Inlet Hose Replacement (RESS From Radiator Outlet Tee To A/Separator) on page 9-332*. 6. Remove the drive motor battery coolant inlet hose from drive motor battery coolant pump. Refer to *Drive Motor Battery Coolant Inlet Hose Replacement (From RESS to Inlet Long Pipe) on page 9-321* or *Drive Motor Battery Coolant Inlet Hose Replacement (From Water Pump to Drive Motor Battery Coolant Inlet Pipe Long) on page 9-322* or *Drive Motor Battery Coolant Inlet Hose Replacement (Outlet Hose Connector to Radiator) on page 9-323*.	
1	Drive Motor Battery Coolant Pump Nut (Qty: 2) **Caution:** Refer to *Fastener Caution on page 0-8*. **Tighten** 10 N•m (89 lb in)
2	Drive Motor Battery Coolant Pump **Procedure** Disconnect the electrical connector from the drive motor battery coolant pump.

Drive Motor Battery Coolant Cooler Outlet Hose Replacement (From the Coolant Flow Valve to Radiator)

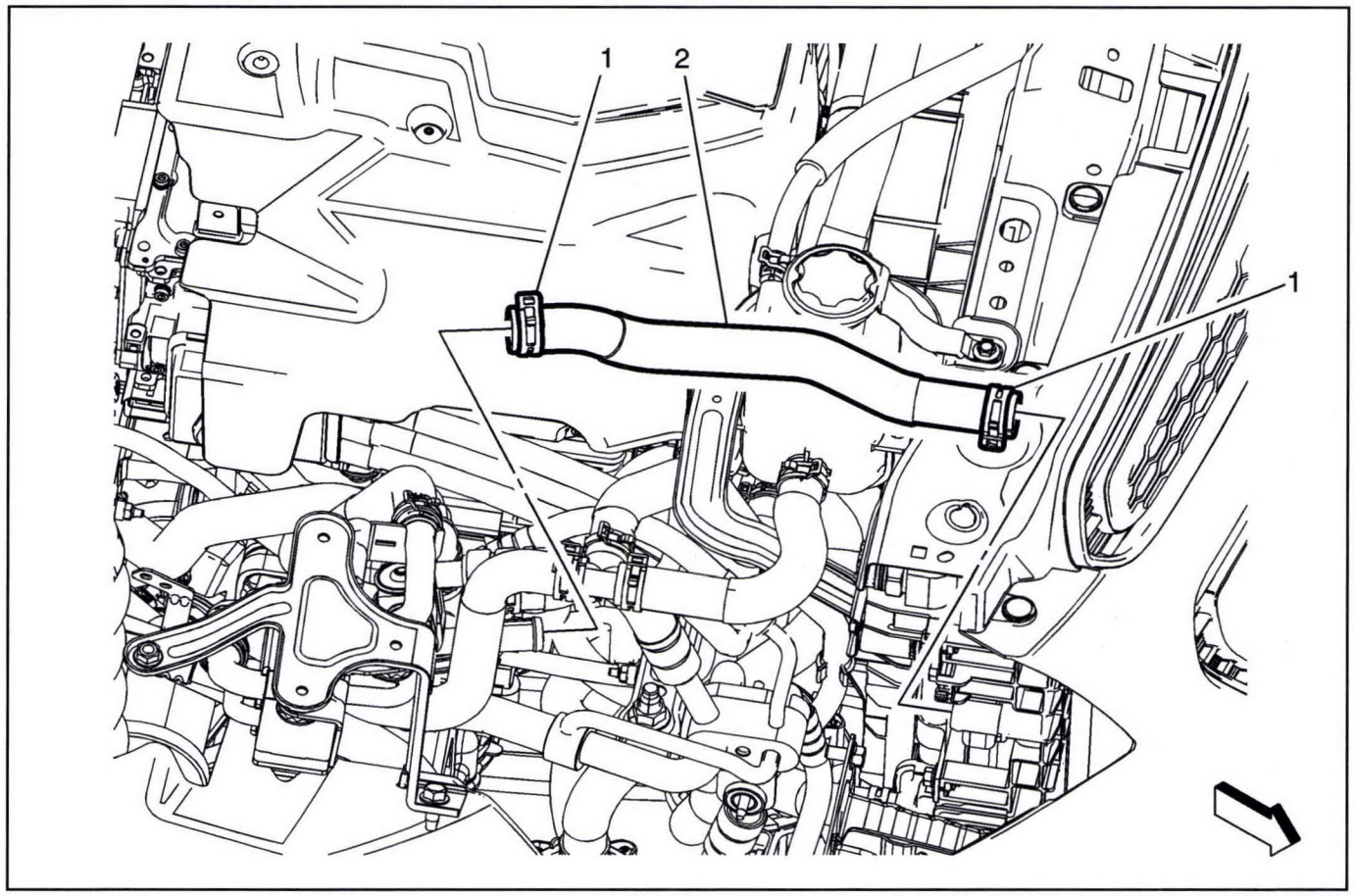

3232004

Drive Motor Battery Coolant Cooler Outlet Hose Replacement (From the Coolant Flow Valve to Radiator)

Callout	Component Name
Danger: Before conducting any repair to this high voltage cooling system, it is necessary to determine/verify whether no high-voltage system faults exist. If high-voltage faults exist, follow published DTC diagnostics/repair procedures prior to performing any cooling system repairs. Failure to correct High Voltage Faults before working on the high voltage cooling system could result in personal injury or death. **Preliminary Procedures** 1. Turn vehicle power OFF and remove all keyless entry transmitters from the vehicle and secure in a place outside the vehicle. 2. Remove the front compartment sight shield. Refer to *Front Compartment Front Sight Shield Replacement on page 3-39*. 3. Drain the drive motor battery cooling system. Refer to *Drive Motor Battery Cooling System Draining and Filling on page 9-257*. 4. Remove the front bumper fascia. Refer to *Front Bumper Fascia Replacement on page 3-57*.	
1	Drive Motor Battery Coolant Cooler Outlet Hose Clamp (Qty: 2) **Procedure** Reposition the drive motor battery coolant cooler outlet hose clamp using *BO-38185* hose clamp pliers. **Special Tools** *BO-38185* Hose Clamp Pliers For equivalent regional tools, refer to *Special Tools on page 10-77*.
2	Drive Motor Battery Coolant Cooler Outlet Hose **Procedure** 1. Fill the cooling system to the proper level. 2. Inspect the cooling system for leaks.

Drive Motor Battery Coolant Cooler Outlet Hose Replacement (From RESS to Outlet Long Pipe)

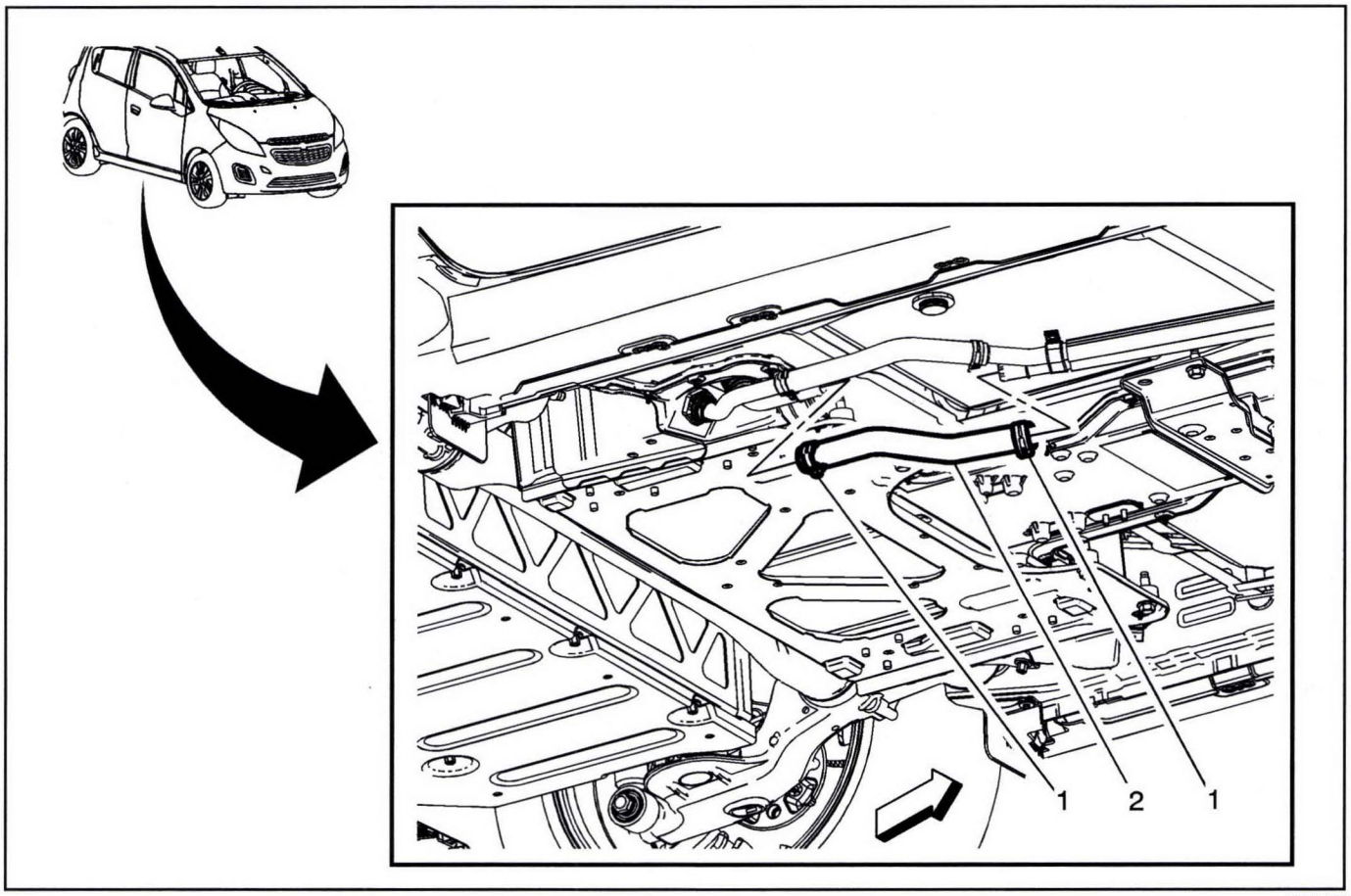

3220426

Drive Motor Battery Coolant Cooler Outlet Hose Replacement (From RESS to Outlet Long Pipe)

Callout	Component Name
Danger: Before conducting any repair to this high voltage cooling system, it is necessary to determine/verify whether no high-voltage system faults exist. If high-voltage faults exist, follow published DTC diagnostics/repair procedures prior to performing any cooling system repairs. Failure to correct High Voltage Faults before working on the high voltage cooling system could result in personal injury or death. **Preliminary Procedures** 1. Turn vehicle power OFF and remove all keyless entry transmitters from the vehicle and secure in a place outside the vehicle. 2. Drain the drive motor battery cooling system. Refer to *Drive Motor Battery Cooling System Draining and Filling on page 9-257*. 3. Remove the front compartment air deflector. Refer to *Front Compartment Air Deflector Replacement on page 3-125*. 4. Remove the underbody front air deflector. Refer to *Underbody Front Air Deflector Replacement (Center) on page 3-126*. 5. Remove the right side underbody front air deflector. Refer to *Underbody Front Air Deflector Replacement - Right Side on page 3-128*. 6. Remove the front underbody rear air rear deflector. Refer to *Underbody Rear Air Rear Deflector Replacement (Rear) on page 3-129* or *Underbody Rear Air Rear Deflector Replacement (Front) on page 3-130*.	
1	Drive Motor Battery Coolant Cooler Outlet Hose Clamp (Qty: 2) **Procedure** Reposition the drive motor battery coolant cooler outlet hose clamps using *BO-38185* hose clamp pliers. **Special Tools** *BO-38185* Hose Clamp Pliers For equivalent regional tools, refer to *Special Tools on page 10-77*.

Drive Motor Battery Coolant Cooler Outlet Hose Replacement (From RESS to Outlet Long Pipe) (cont'd)

Callout	Component Name
2	Drive Motor Battery Coolant Cooler Outlet Hose **Procedure** 1. Fill the cooling system to the proper level. Refer to *Drive Motor Battery Cooling System Draining and Filling on page 9-257*. 2. Inspect the cooling system for leaks.

Drive Motor Battery Coolant Flow Control Valve Replacement

Removal Procedure

Danger: Before conducting any repair to this high voltage cooling system, it is necessary to determine/verify whether no high-voltage system faults exist. If high-voltage faults exist, follow published DTC diagnostics/repair procedures prior to performing any cooling system repairs. Failure to correct High Voltage Faults before working on the high voltage cooling system could result in personal injury or death.

1. Turn vehicle power OFF and remove all keyless entry transmitters from the vehicle and secure in a place outside the vehicle.

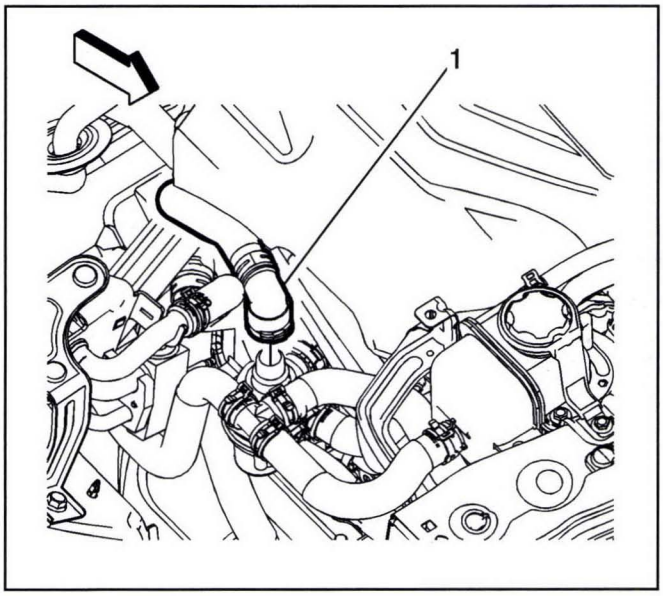

3239127

2. Remove the drive motor battery coolant cooler outlet hose (1) from the drive motor battery coolant flow control valve. Refer to *Drive Motor Battery Coolant Cooler Outlet Hose Replacement (From the Coolant Flow Valve to Radiator) on page 9-316* or *Drive Motor Battery Coolant Cooler Outlet Hose Replacement (From RESS to Outlet Long Pipe) on page 9-317*.

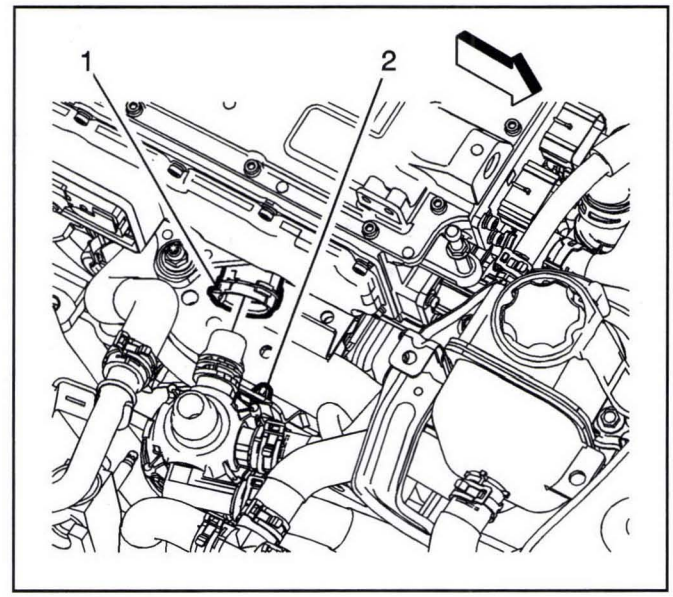

3239128

3. Remove the drive motor battery coolant cooler inlet hose assembly (1) from the drive motor battery coolant flow control valve. Refer to *Drive Motor Battery Coolant Cooler Inlet Hose Replacement (RESS From 4way V/V(C) To Chiller) on page 9-335*.
4. Remove the drive motor battery coolant flow control valve from the bracket by releasing the mounting clip (2).

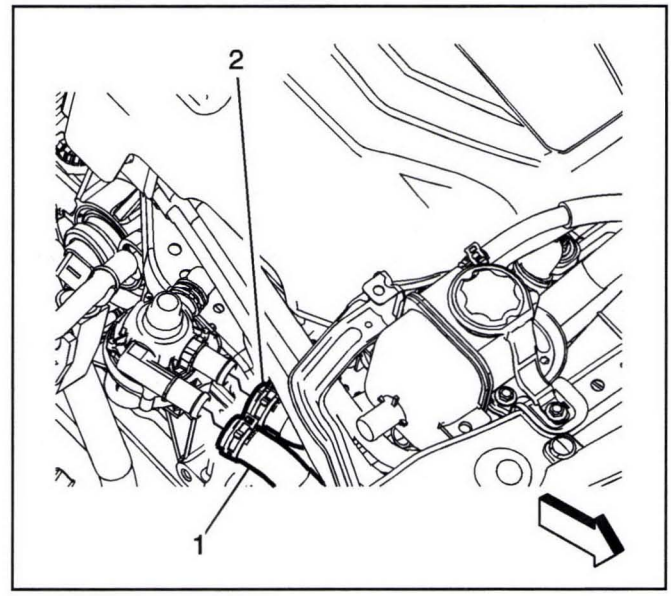

3239129

5. Remove the drive motor battery coolant cooler outlet hose (1) from the drive motor battery coolant flow control valve. Refer to *Drive Motor Battery Coolant Cooler Outlet Hose Replacement (From the Coolant Flow Valve to Radiator) on page 9-316* or *Drive Motor Battery Coolant Cooler Outlet Hose Replacement (From RESS to Outlet Long Pipe) on page 9-317*.
6. Remove the drive motor battery coolant cooler outlet hose (2) from the drive motor battery coolant flow control valve. Refer to *Drive Motor Battery Coolant Outlet Hose Replacement on page 9-328*.

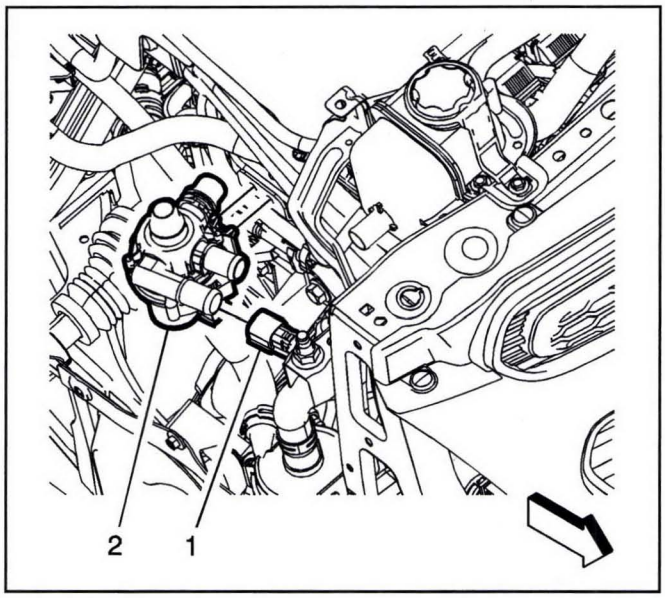

3239130

7. Remove the drive motor battery coolant flow control valve electrical connector (1) from the coolant flow control valve (2).
8. Remove the drive motor battery coolant flow control valve (2) from the coolant flow control valve mounting bracket.
9. Remove the drive motor battery coolant flow control valve (2) from the vehicle.

Installation Procedure

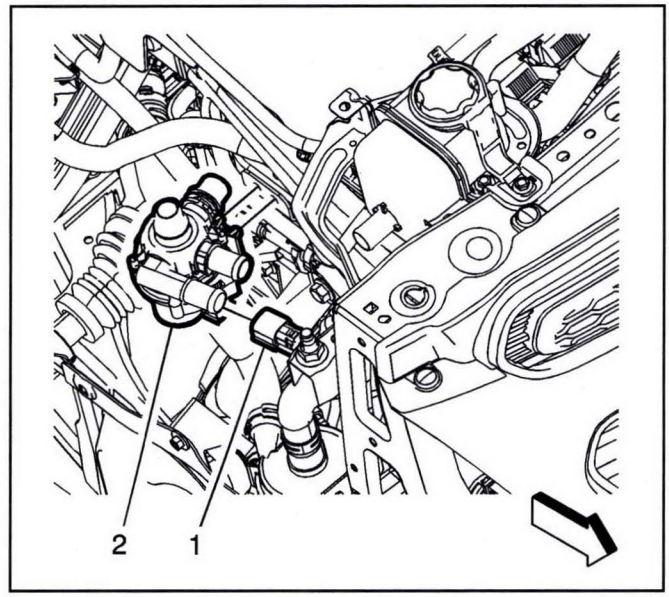

3239130

1. Install the drive motor battery coolant flow control valve (2) to the coolant flow control valve mounting bracket.
2. Install the drive motor battery coolant flow control valve electrical connector (1) to the coolant flow control valve (2).

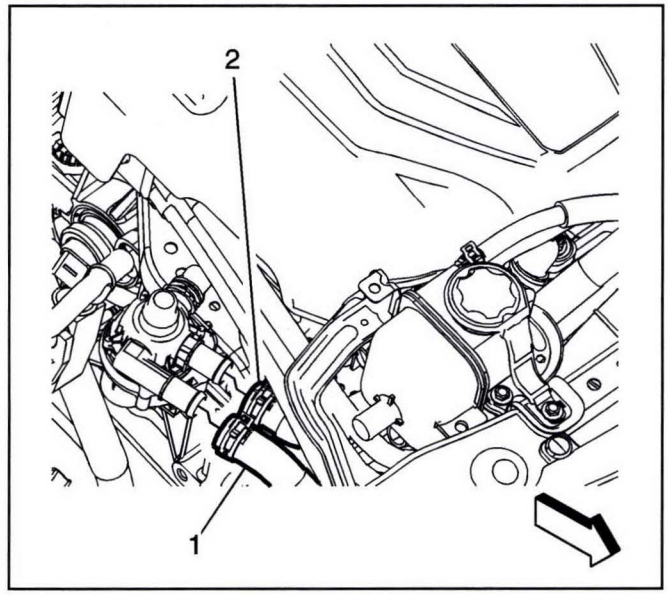

3239129

3. Install the drive motor battery coolant cooler outlet hose (2) to the drive motor battery coolant flow control valve. Refer to *Drive Motor Battery Coolant Outlet Hose Replacement on page 9-328*.

4. Install the drive motor battery coolant cooler outlet hose (1) to the drive motor battery coolant flow control valve. Refer to *Drive Motor Battery Coolant Cooler Outlet Hose Replacement (From the Coolant Flow Valve to Radiator) on page 9-316* or *Drive Motor Battery Coolant Cooler Outlet Hose Replacement (From RESS to Outlet Long Pipe) on page 9-317*.

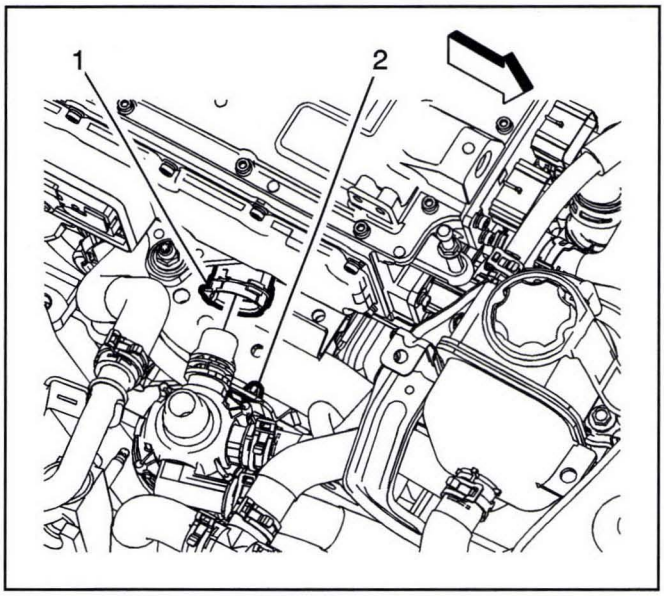

3239128

5. Install the drive motor battery coolant flow control valve to the bracket by inserting the mounting clip (2).
6. Install the drive motor battery coolant cooler inlet hose assembly (1) to the drive motor battery coolant flow control valve. Refer to *Drive Motor Battery Coolant Cooler Inlet Hose Replacement (RESS From 4way V/V(C) To Chiller) on page 9-335*.

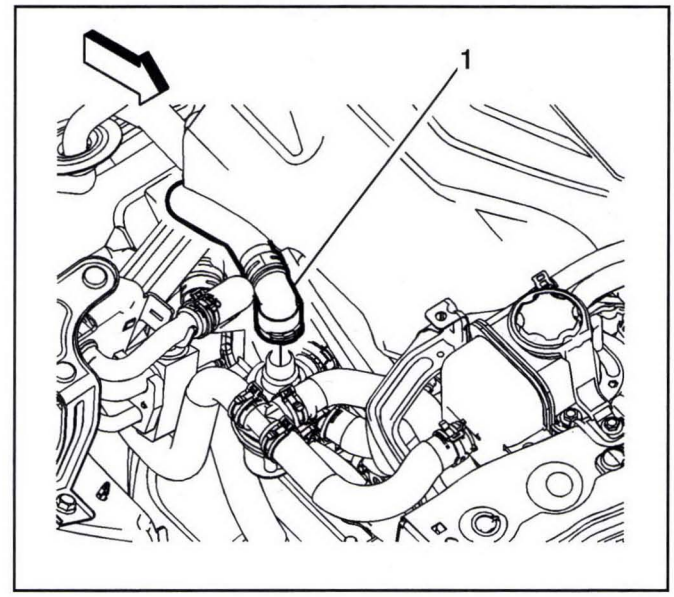

3239127

7. Install the drive motor battery coolant cooler outlet hose (1) to the drive motor battery coolant flow control valve. Refer to *Drive Motor Battery Coolant Cooler Outlet Hose Replacement (From the Coolant Flow Valve to Radiator) on page 9-316* or *Drive Motor Battery Coolant Cooler Outlet Hose Replacement (From RESS to Outlet Long Pipe) on page 9-317*.
8. Perform the drive motor battery coolant flow control valve learn procedure if the valve is not being replaced. Refer to *Hybrid/EV Battery Pack Coolant Control Valve Learn on page 9-343*.

Drive Motor Battery Coolant Inlet Hose Replacement (From RESS to Inlet Long Pipe)

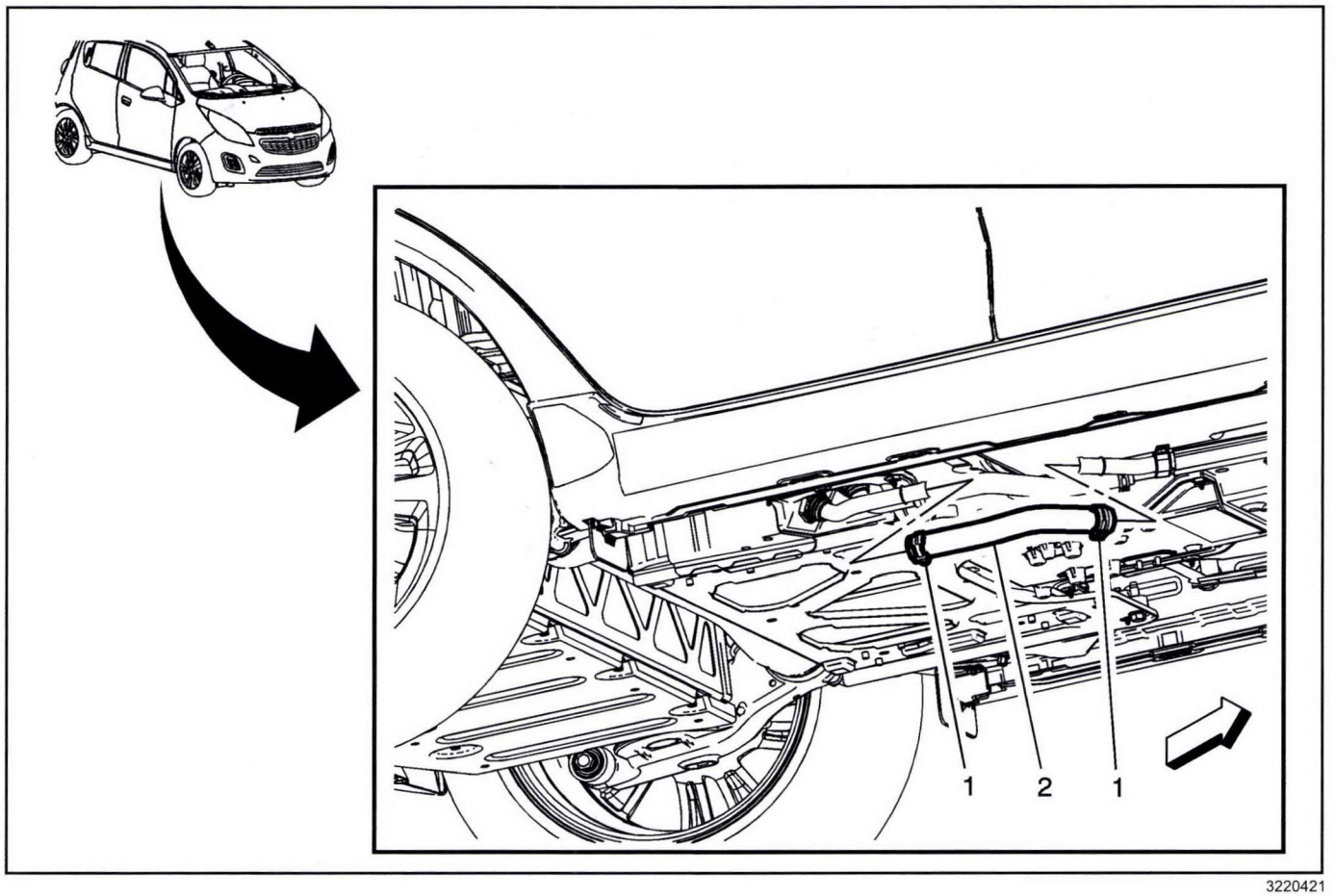

3220421

Drive Motor Battery Coolant Inlet Hose Replacement (From RESS to Inlet Long Pipe)

Callout	Component Name
Danger: Before conducting any repair to this high voltage cooling system, it is necessary to determine/verify whether no high-voltage system faults exist. If high-voltage faults exist, follow published DTC diagnostics/repair procedures prior to performing any cooling system repairs. Failure to correct High Voltage Faults before working on the high voltage cooling system could result in personal injury or death. **Preliminary Procedures** 1. Turn vehicle power OFF and remove all keyless entry transmitters from the vehicle and secure in a place outside the vehicle. 2. Drain the drive motor battery cooling system. Refer to *Drive Motor Battery Cooling System Draining and Filling on page 9-257*. 3. Remove the underbody front air deflector. Refer to *Underbody Front Air Deflector Replacement (Center) on page 3-126*. 4. Remove the right side underbody front air deflector. Refer to *Underbody Front Air Deflector Replacement - Right Side on page 3-128*.	
1	Drive Motor Battery Coolant Inlet Hose Clamp (Qty: 2) **Procedure** Reposition the drive motor battery coolant inlet pipe hose clamps using *BO-38185* hose clamp pliers. **Special Tools** *BO-38185* Hose Clamp Pliers For equivalent regional tools, refer to *Special Tools on page 10-77*.
2	Drive Motor Battery Coolant Inlet Hose **Procedure** 1. Fill the cooling system to the proper level. Refer to *Drive Motor Battery Cooling System Draining and Filling on page 9-257*. 2. Inspect the cooling system for leaks.

Drive Motor Battery Coolant Inlet Hose Replacement (From Water Pump to Drive Motor Battery Coolant Inlet Pipe Long)

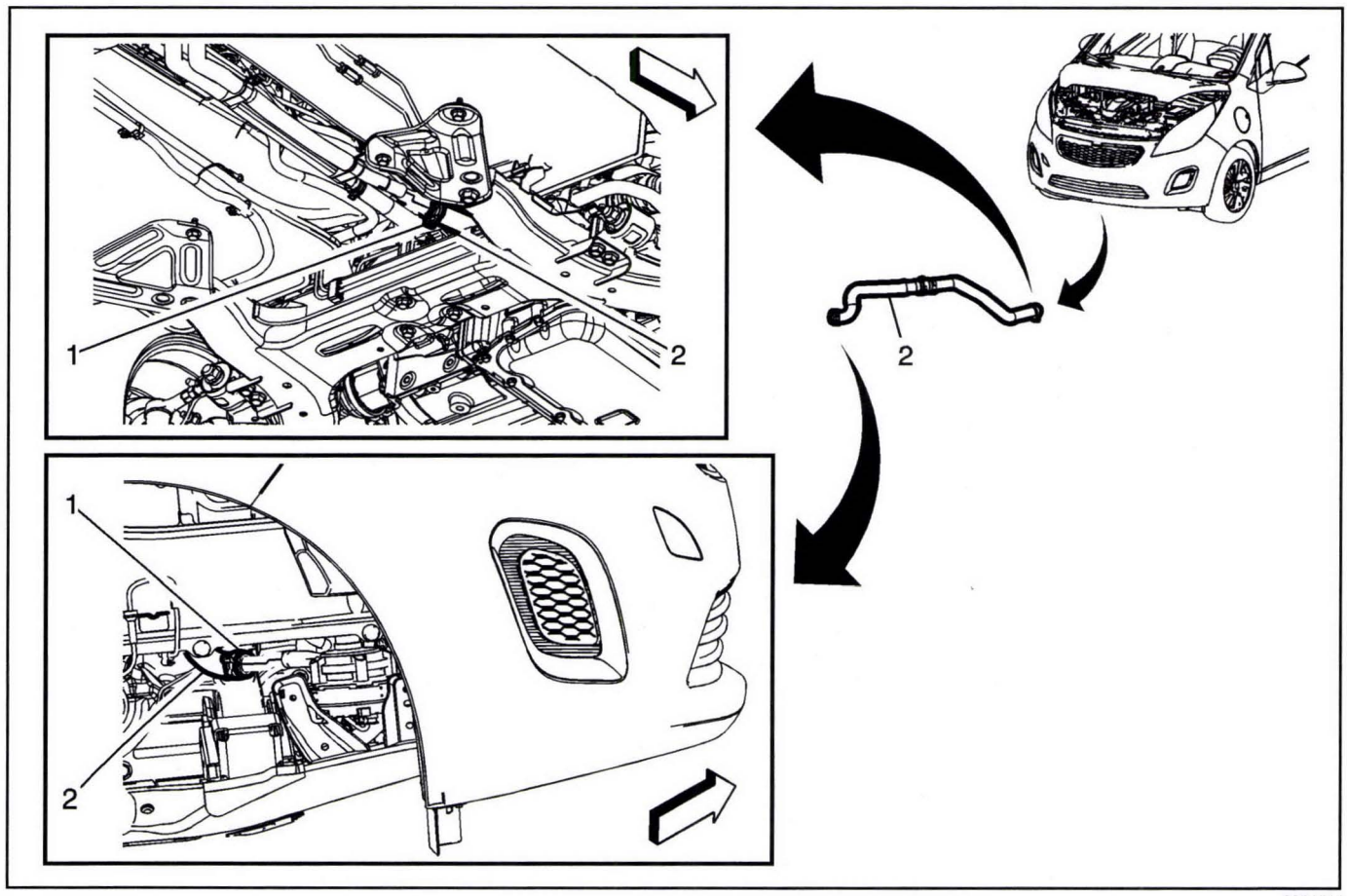

3221514

Drive Motor Battery Coolant Inlet Hose Replacement (From Water Pump to Drive Motor Battery Coolant Inlet Pipe Long)

Callout	Component Name
Danger: Before conducting any repair to this high voltage cooling system, it is necessary to determine/verify whether no high-voltage system faults exist. If high-voltage faults exist, follow published DTC diagnostics/repair procedures prior to performing any cooling system repairs. Failure to correct High Voltage Faults before working on the high voltage cooling system could result in personal injury or death.	
	Preliminary Procedures 1. Turn vehicle power OFF and remove all keyless entry transmitters from the vehicle and secure in a place outside the vehicle. 2. Drain the coolant. Refer to *Drive Motor Battery Cooling System Draining and Filling on page 9-257*. 3. Remove the front compartment air deflector. Refer to *Front Compartment Air Deflector Replacement on page 3-125*. 4. Remove the underbody front air deflector. Refer to *Underbody Front Air Deflector Replacement (Center) on page 3-126*. 5. Remove the right front wheelhouse liner . Refer to *Front Wheelhouse Liner Replacement - Right Side on page 3-138*.
1	Drive Motor Battery Coolant Inlet Hose Clamp (Qty: 2) **Procedure** Reposition the drive motor battery coolant inlet hose clamp using *BO-38185* hose clamp pliers. **Special Tools** *BO-38185* Hose Clamp Pliers For equivalent regional tools, refer to *Special Tools on page 9-344*.
2	Drive Motor Battery Coolant Inlet Hose **Procedures** 1. Fill the cooling system to the proper level. Refer to *Drive Motor Battery Cooling System Draining and Filling on page 9-257*. 2. Inspect the cooling system for leaks.

Drive Motor Battery Coolant Inlet Hose Replacement (Outlet Hose Connector to Radiator)

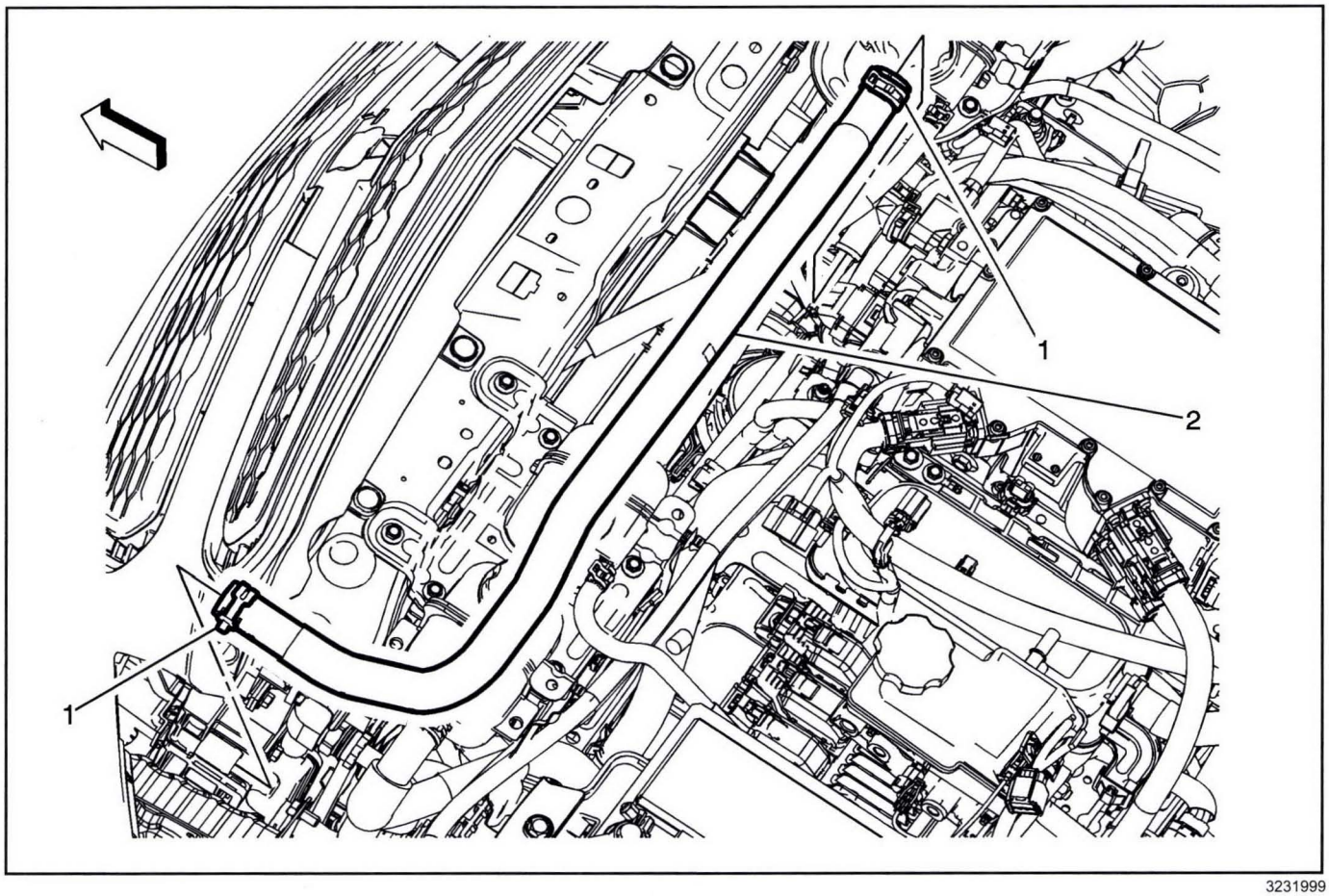

3231999

Drive Motor Battery Coolant Inlet Hose Replacement (Outlet Hose Connector to Radiator)

Callout	Component Name
Danger: Before conducting any repair to this high voltage cooling system, it is necessary to determine/verify whether no high-voltage system faults exist. If high-voltage faults exist, follow published DTC diagnostics/repair procedures prior to performing any cooling system repairs. Failure to correct High Voltage Faults before working on the high voltage cooling system could result in personal injury or death. **Preliminary Procedures** 1. Turn vehicle power OFF and remove all keyless entry transmitters from the vehicle and secure in a place outside the vehicle. 2. Drain the drive motor battery cooling system. Refer to *Drive Motor Battery Cooling System Draining and Filling on page 9-257*. 3. Remove the front bumper fascia. Refer to *Front Bumper Fascia Replacement on page 3-57*. 4. Release the radiator surge tank (Reserve Energy Supply System Reservoir) by removing the radiator surge tank clamp bracket bolts. Refer to *Radiator Surge Tank Clamp Bracket Replacement (Right Side) on page 9-279* or *Radiator Surge Tank Clamp Bracket Replacement (Left Side) on page 9-280*.	
1	Drive Motor Battery Coolant Inlet Hose Clamp (Qty: 2) **Procedure** Reposition the drive motor battery coolant inlet hose clamp using *GE-47622* hose clamp pliers. **Special Tools** *GE-47622* Hose Clamp Pliers For equivalent regional tools, refer to *Special Tools on page 10-77*.
2	Drive Motor Battery Coolant Inlet Hose **Procedures** 1. Fill the cooling system to the proper level. 2. Inspect the cooling system for leaks.

Drive Motor Battery Coolant Inlet Pipe Replacement (Inlet Pipe)

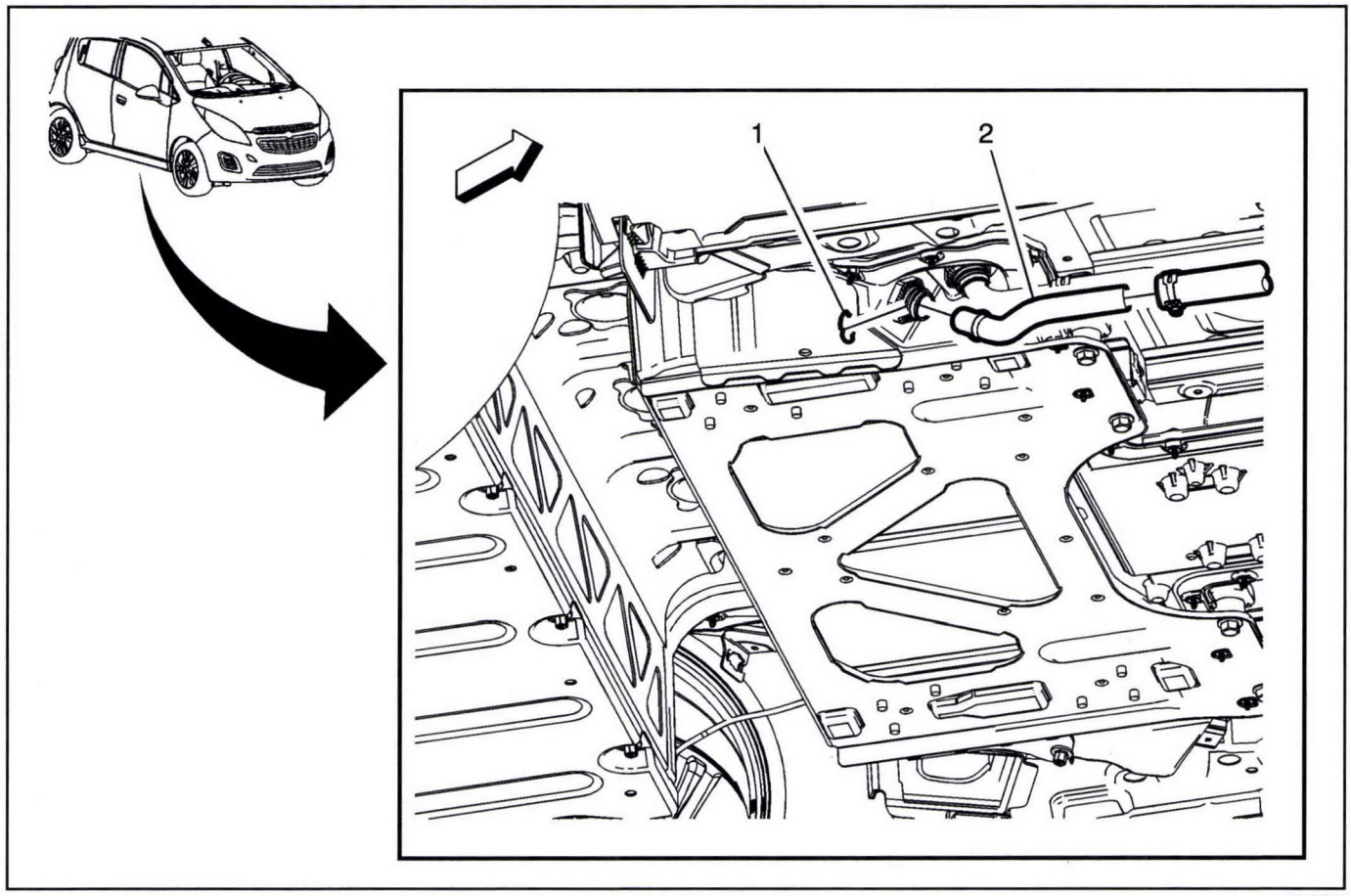

3218961

Drive Motor Battery Coolant Inlet Pipe Replacement (Inlet Pipe)

Callout	Component Name
Danger: Before conducting any repair to this high voltage cooling system, it is necessary to determine/verify whether no high-voltage system faults exist. If high-voltage faults exist, follow published DTC diagnostics/repair procedures prior to performing any cooling system repairs. Failure to correct High Voltage Faults before working on the high voltage cooling system could result in personal injury or death. **Preliminary Procedures** 1. Turn vehicle power OFF and remove all keyless entry transmitters from the vehicle and secure in a place outside the vehicle. 2. Drain the drive motor battery cooling system. Refer to *Drive Motor Battery Cooling System Draining and Filling on page 9-257*. 3. Remove the front compartment air deflector. Refer to *Front Compartment Air Deflector Replacement on page 3-125*. 4. Remove the underbody front air deflector. Refer to *Underbody Front Air Deflector Replacement (Center) on page 3-126*. 5. Remove the right side underbody front air deflector. Refer to *Underbody Front Air Deflector Replacement - Right Side on page 3-128*. 6. Remove the front underbody rear air rear deflector. Refer to *Underbody Rear Air Rear Deflector Replacement (Rear) on page 3-129* or *Underbody Rear Air Rear Deflector Replacement (Front) on page 3-130*.	
1	Drive Motor Battery Coolant Inlet Pipe Retaining Clip

Drive Motor Battery Coolant Inlet Pipe Replacement (Inlet Pipe) (cont'd)

Callout	Component Name
2	Drive Motor Battery Coolant Inlet Pipe **Procedure** 1. Remove the drive motor battery coolant inlet pipe from the drive motor battery connector. 2. Remove the drive motor battery coolant inlet pipe from the drive motor battery coolant inlet hose. Refer to *Drive Motor Battery Coolant Inlet Hose Replacement (From RESS to Inlet Long Pipe) on page 9-321* or *Drive Motor Battery Coolant Inlet Hose Replacement (From Water Pump to Drive Motor Battery Coolant Inlet Pipe Long) on page 9-322* or *Drive Motor Battery Coolant Inlet Hose Replacement (Outlet Hose Connector to Radiator) on page 9-323*. 3. Fill the cooling system to the proper level. Refer to *Drive Motor Battery Cooling System Draining and Filling on page 9-257*. 4. Inspect the cooling system for leaks.

Drive Motor Battery Coolant Inlet Pipe Replacement (Outlet Pipe)

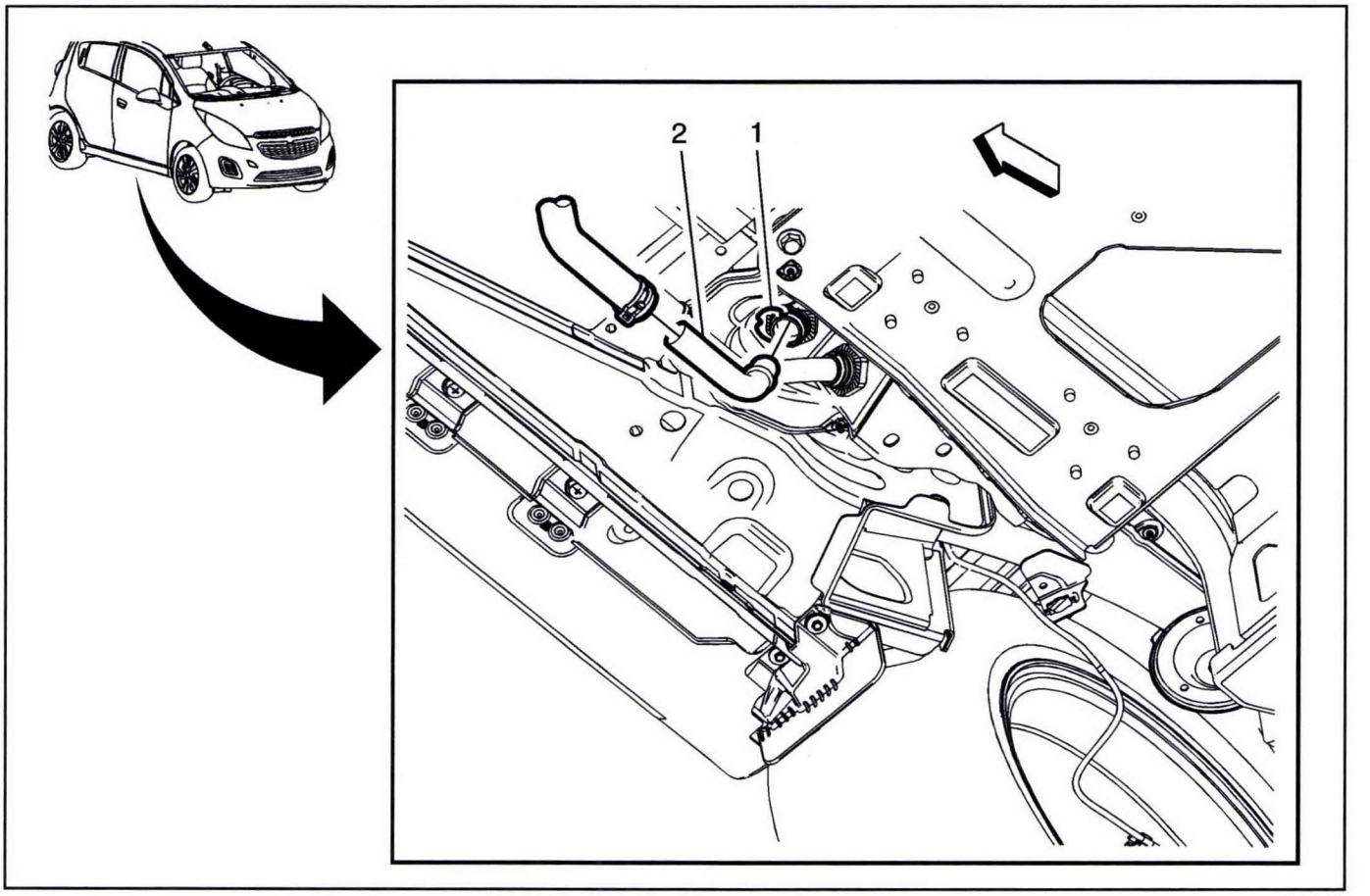

3219825

Drive Motor Battery Coolant Inlet Pipe Replacement (Outlet Pipe)

Callout	Component Name
Danger: Before conducting any repair to this high voltage cooling system, it is necessary to determine/verify whether no high-voltage system faults exist. If high-voltage faults exist, follow published DTC diagnostics/repair procedures prior to performing any cooling system repairs. Failure to correct High Voltage Faults before working on the high voltage cooling system could result in personal injury or death. **Preliminary Procedures** 1. Turn vehicle power OFF and remove all keyless entry transmitters from the vehicle and secure in a place outside the vehicle. 2. Drain the drive motor battery cooling system. Refer to *Drive Motor Battery Cooling System Draining and Filling on page 9-257*. 3. Remove the front compartment air deflector. Refer to *Front Compartment Air Deflector Replacement on page 3-125*. 4. Remove the underbody front air deflector. Refer to *Underbody Front Air Deflector Replacement (Center) on page 3-126*. 5. Remove the right side underbody front air deflector. Refer to *Underbody Front Air Deflector Replacement - Right Side on page 3-128*. 6. Remove the front underbody rear air rear deflector. Refer to *Underbody Rear Air Rear Deflector Replacement (Rear) on page 3-129* or *Underbody Rear Air Rear Deflector Replacement (Front) on page 3-130*.	
1	Drive Motor Battery Coolant Outlet Pipe Retaining Clip
2	Drive Motor Battery Coolant Outlet Pipe **Procedure** 1. Remove the drive motor battery coolant outlet pipe from the drive motor battery connector. 2. Remove the drive motor battery coolant outlet pipe from the drive motor battery coolant cooler outlet hose. Refer to *Drive Motor Battery Coolant Cooler Outlet Hose Replacement (From the Coolant Flow Valve to Radiator) on page 9-316* or *Drive Motor Battery Coolant Cooler Outlet Hose Replacement (From RESS to Outlet Long Pipe) on page 9-317*. 3. Fill the cooling system to the proper level. Refer to *Drive Motor Battery Cooling System Draining and Filling on page 9-257*. 4. Inspect the cooling system for leaks.

Drive Motor Battery Coolant Inlet Pipe Replacement (Long One)

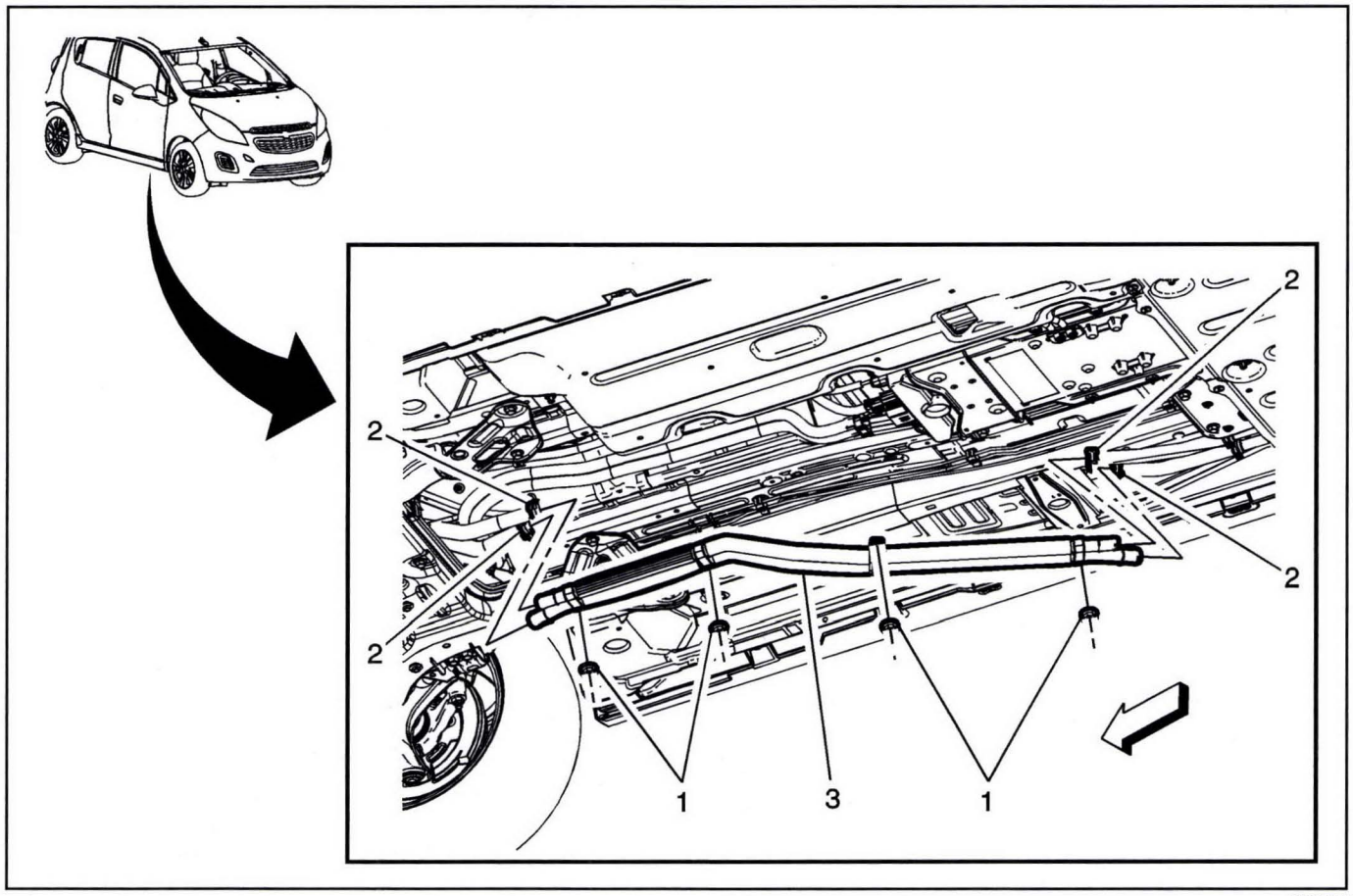

3220419

Drive Motor Battery Coolant Inlet Pipe Replacement (Long One)

Callout	Component Name
Danger: Before conducting any repair to this high voltage cooling system, it is necessary to determine/verify whether no high-voltage system faults exist. If high-voltage faults exist, follow published DTC diagnostics/repair procedures prior to performing any cooling system repairs. Failure to correct High Voltage Faults before working on the high voltage cooling system could result in personal injury or death. **Preliminary Procedures** 1. Turn vehicle power OFF and remove all keyless entry transmitters from the vehicle and secure in a place outside the vehicle. 2. Drain the drive motor battery cooling system. Refer to *Drive Motor Battery Cooling System Draining and Filling on page 9-257*. 3. Remove the front compartment air deflector. Refer to *Front Compartment Air Deflector Replacement on page 3-125*. 4. Remove the underbody front air deflector. Refer to *Underbody Front Air Deflector Replacement (Center) on page 3-126*. 5. Remove the right side underbody front air deflector. Refer to *Underbody Front Air Deflector Replacement - Right Side on page 3-128*.	
1	Drive Motor Battery Coolant Inlet Pipe Retainers (Qty: 4) **Caution:** Refer to *Fastener Caution on page 0-8*. **Tighten** 10 N•m (89 lb in)
2	Drive Motor Battery Coolant Inlet Pipe Hose Clamp (Qty: 4) **Procedure** Reposition the drive motor battery coolant inlet pipe hose clamps using *BO-38185* hose clamp pliers. **Special Tools** *BO-38185* Hose Clamp Pliers For equivalent regional tools, refer to *Special Tools on page 10-77*.

Drive Motor Battery Coolant Inlet Pipe Replacement (Long One) (cont'd)

Callout	Component Name
3	Drive Motor Battery Coolant Inlet Pipe **Procedures** 1. Fill the cooling system to the proper level. Refer to *Drive Motor Battery Cooling System Draining and Filling on page 9-257*. 2. Inspect the cooling system for leaks.

Drive Motor Battery Coolant Outlet Hose Replacement

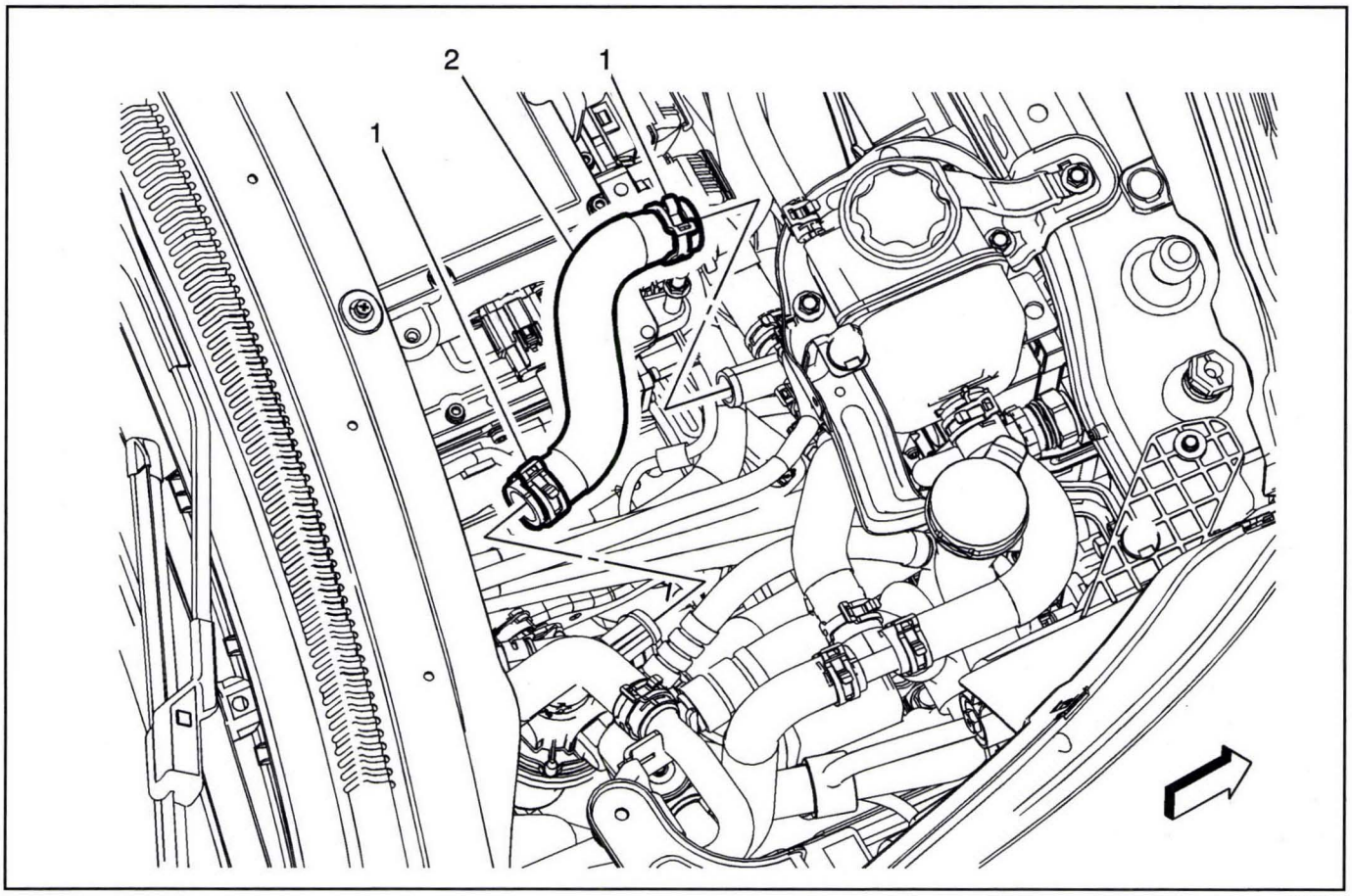

3231766

Drive Motor Battery Coolant Outlet Hose Replacement

Callout	Component Name
	Danger: Before conducting any repair to this high voltage cooling system, it is necessary to determine/verify whether no high-voltage system faults exist. If high-voltage faults exist, follow published DTC diagnostics/repair procedures prior to performing any cooling system repairs. Failure to correct High Voltage Faults before working on the high voltage cooling system could result in personal injury or death.

Preliminary Procedures

1. Turn vehicle power OFF and remove all keyless entry transmitters from the vehicle and secure in a place outside the vehicle.
2. Remove the front compartment sight shield. Refer to *Front Compartment Front Sight Shield Replacement on page 3-39*.
3. Remove the high voltage disconnect circuit connector cover. Refer to *High Voltage Disconnect Circuit Connector Cover Replacement on page 9-174*.
4. Remove the RESS surge tank bolts. Refer to *Radiator Surge Tank Clamp Bracket Replacement (Right Side) on page 9-279* or *Radiator Surge Tank Clamp Bracket Replacement (Left Side) on page 9-280* and *Radiator Surge Tank Support Bracket Replacement on page 9-281*.
5. Drain the drive motor battery cooling system. Refer to *Drive Motor Battery Cooling System Draining and Filling on page 9-257*.

Drive Motor Battery Coolant Outlet Hose Replacement (cont'd)

Callout	Component Name
1	Drive Motor Battery Coolant Outlet Hose Clamp (Qty: 2) **Procedure** Reposition the drive motor battery coolant outlet hose clamp using *BO-38185* hose clamp pliers. **Special Tools** *BO-38185* Hose Clamp Pliers For equivalent regional tools, refer to *Special Tools on page 10-77*.
2	Drive Motor Battery Coolant Outlet Hose **Procedure** 1. Fill the cooling system to the proper level. 2. Inspect the cooling system for leaks.

Drive Motor Battery Radiator Inlet Hose Replacement (RESS From Radiator Outlet to A/Separator)

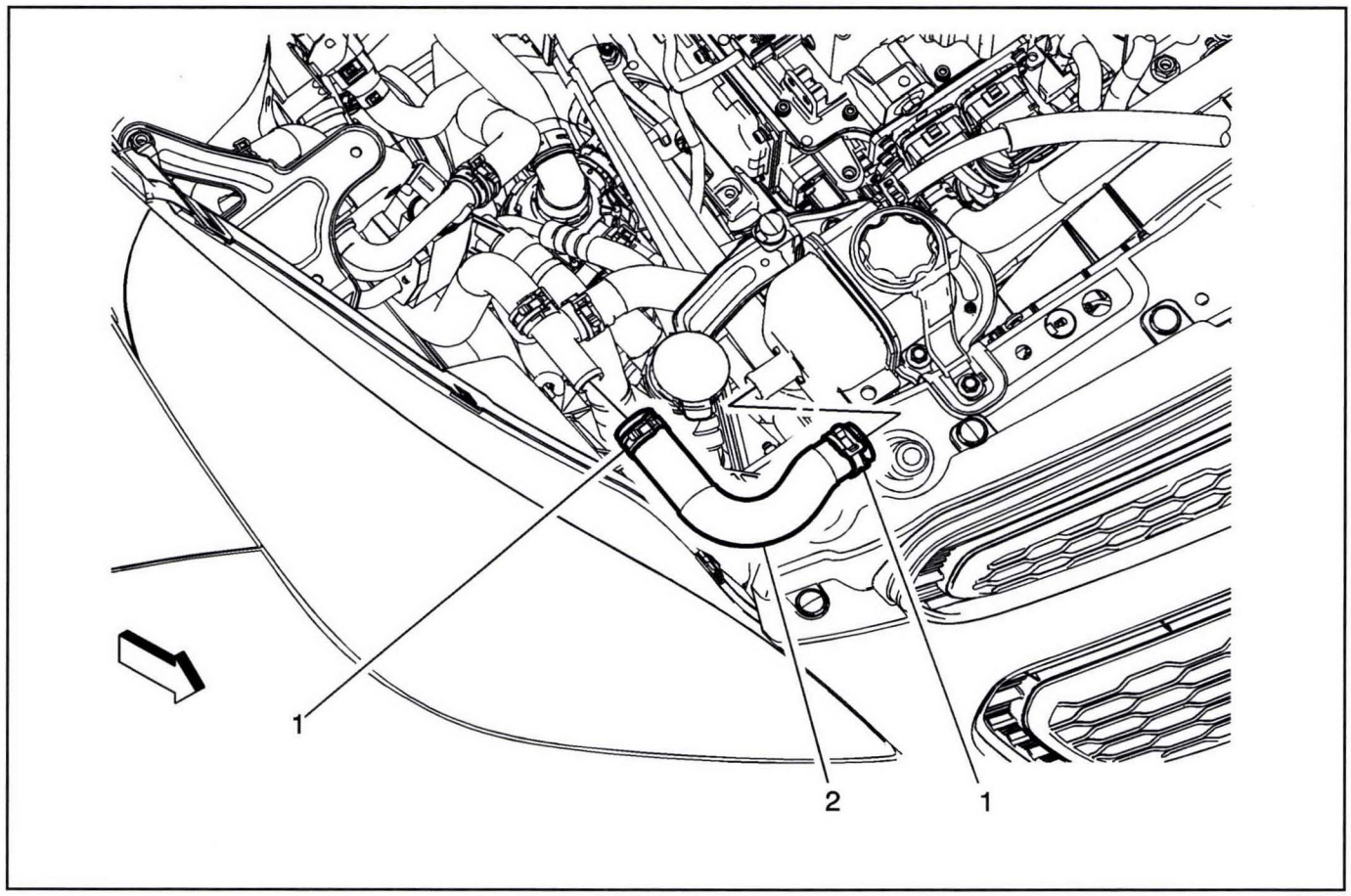

3228753

Drive Motor Battery Radiator Inlet Hose Replacement (RESS From Radiator Outlet to A/ Separator)

Callout	Component Name
Danger: Before conducting any repair to this high voltage cooling system, it is necessary to determine/verify whether no high-voltage system faults exist. If high-voltage faults exist, follow published DTC diagnostics/repair procedures prior to performing any cooling system repairs. Failure to correct High Voltage Faults before working on the high voltage cooling system could result in personal injury or death. **Preliminary Procedures** 1. Turn vehicle power OFF and remove all keyless entry transmitters from the vehicle and secure in a place outside the vehicle. 2. Remove the front compartment sight shield. Refer to *Front Compartment Front Sight Shield Replacement on page 3-39*. 3. Remove the windshield washer solvent container filler tube. Refer to *Windshield Washer Solvent Container Filler Tube Replacement on page 4-323*. 4. Drain the drive motor battery cooling system. Refer to *Drive Motor Battery Cooling System Draining and Filling on page 9-257*.	
1	Drive Motor Battery Radiator Inlet Hose Clamp (Qty: 2) **Procedure** Reposition the drive motor battery radiator inlet hose clamps using *BO-38185* Hose Clamp Pliers. **Special Tools** *BO-38185* Hose Clamp Pliers For equivalent regional tools, refer to *Special Tools on page 10-77*.
2	Drive Motor Battery Radiator Inlet Hose **Procedure** 1. After installation, fill the coolant reservoir to the fill level. Refer to *Drive Motor Generator Power Inverter Module Cooling System Draining and Filling on page 9-264*. 2. Inspect cooling system for leaks.

Drive Motor Battery Radiator Inlet Hose Replacement (RESS From A/Separator To Water Pump)

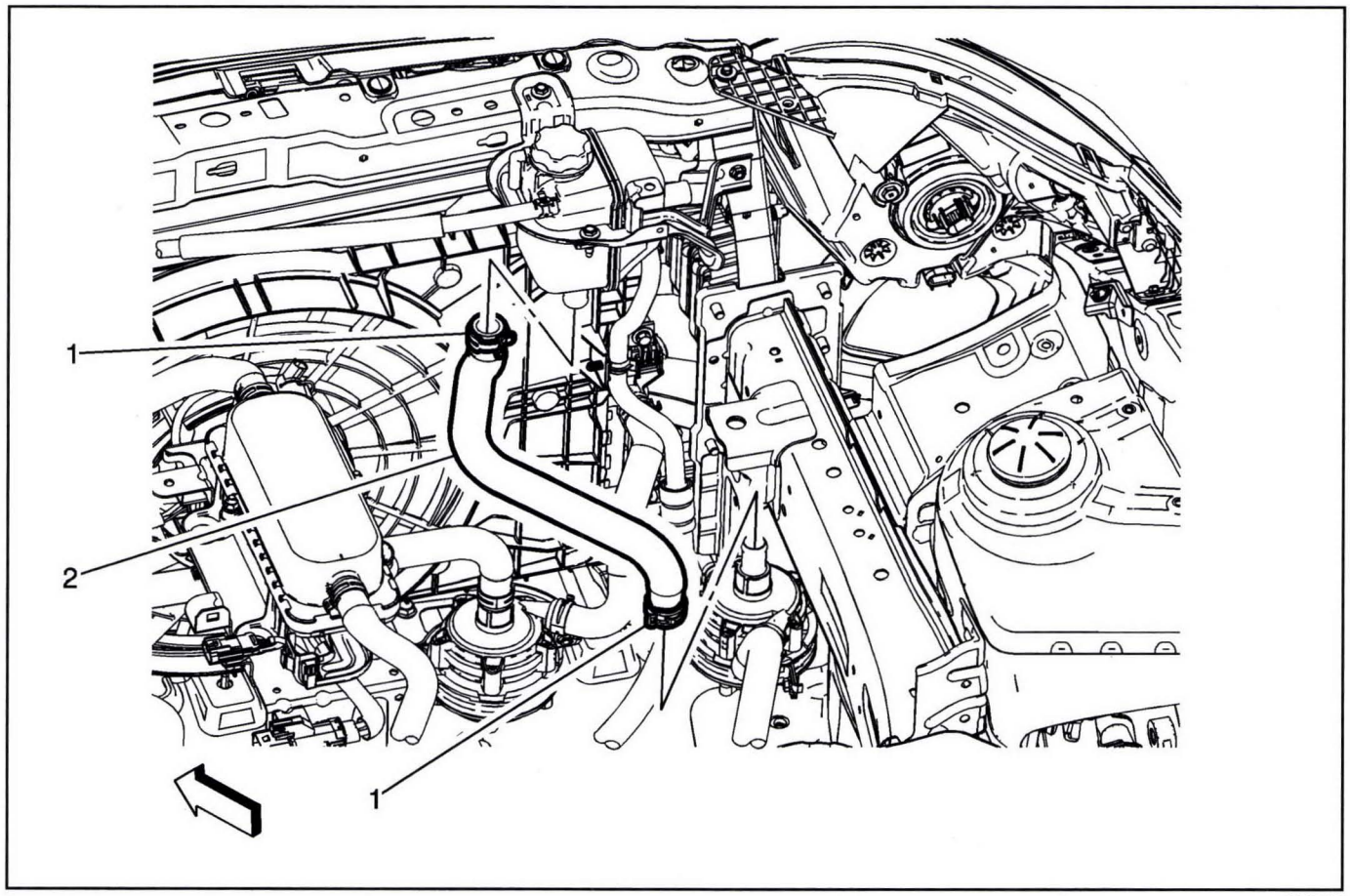

3228861

Drive Motor Battery Radiator Inlet Hose Replacement (RESS From A/Separator To Water Pump)

Callout	Component Name
Danger: Before conducting any repair to this high voltage cooling system, it is necessary to determine/verify whether no high-voltage system faults exist. If high-voltage faults exist, follow published DTC diagnostics/repair procedures prior to performing any cooling system repairs. Failure to correct High Voltage Faults before working on the high voltage cooling system could result in personal injury or death. **Preliminary Procedures** 1. Turn vehicle power OFF and remove all keyless entry transmitters from the vehicle and secure in a place outside the vehicle. 2. Remove the front compartment sight shield. Refer to *Front Compartment Front Sight Shield Replacement on page 3-39*. 3. Drain the drive motor battery cooling system. Refer to *Drive Motor Battery Cooling System Draining and Filling on page 9-257*. 4. Remove the right front wheelhouse liner. Refer to *Front Wheelhouse Liner Replacement - Right Side on page 3-138*. 5. To access the drive motor battery radiator inlet hose clamp remove the drive motor battery coolant pump nuts. Refer to *Drive Motor Battery Coolant Pump Replacement on page 9-315*.	
1	Drive Motor Battery Radiator Inlet Hose Clamp (Qty: 2) **Procedure** Reposition the drive motor battery radiator inlet hose clamps using *BO-38185* hose clamp pliers. **Special Tools** *BO-38185* Hose Clamp Pliers For equivalent regional tools, refer to *Special Tools on page 10-77*.

Drive Motor Battery Radiator Inlet Hose Replacement (RESS From A/Separator To Water Pump) (cont'd)

Callout	Component Name
2	Drive Motor Battery Radiator Inlet Hose **Procedure** 1. After installation, fill the coolant reservoir to the fill level. Refer to *Drive Motor Generator Power Inverter Module Cooling System Draining and Filling on page 9-264*. 2. Inspect cooling system for leaks.

Drive Motor Battery Radiator Inlet Hose Replacement (RESS From Radiator Outlet Tee To A/Separator)

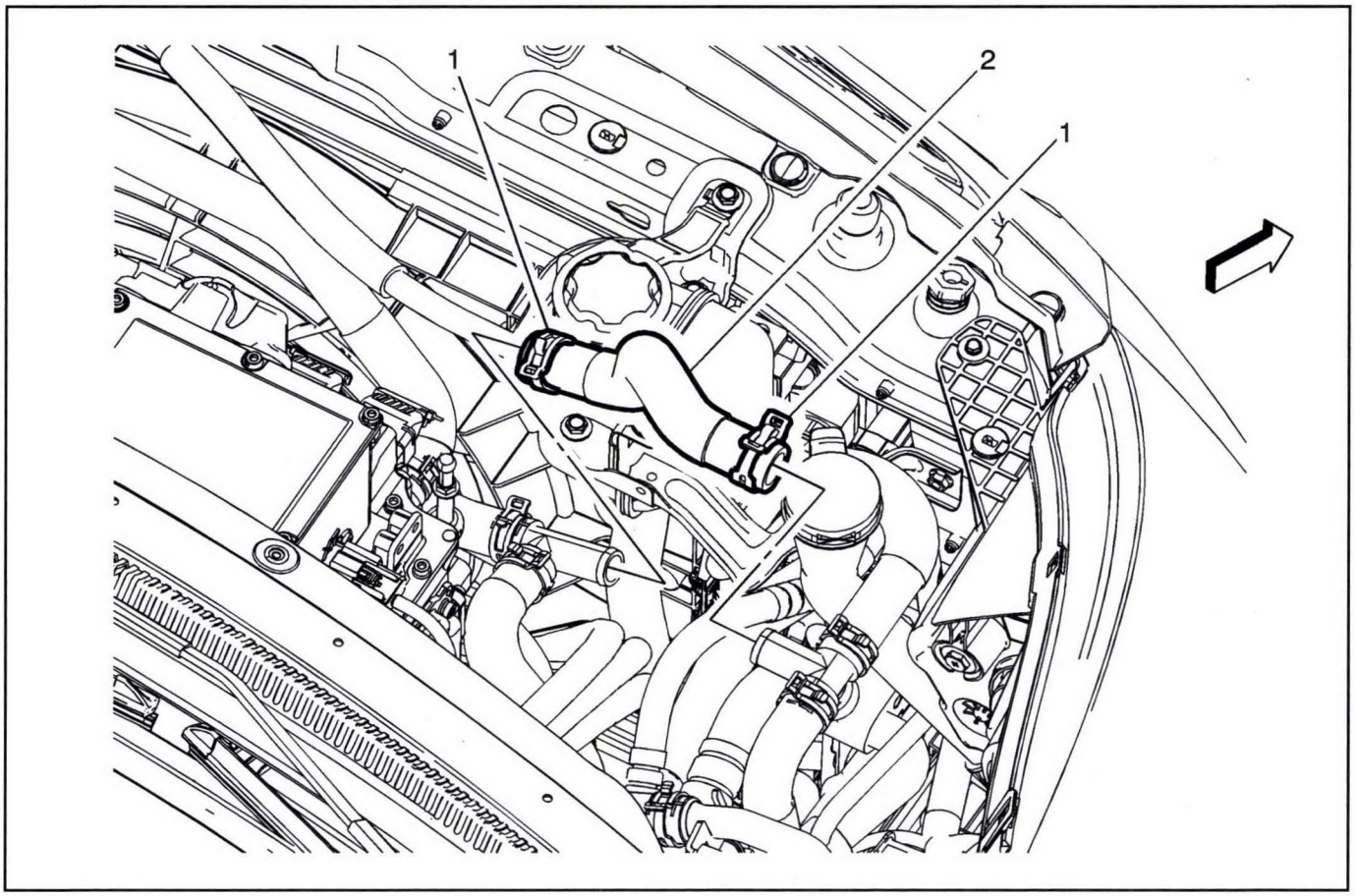

3231997

Drive Motor Battery Radiator Inlet Hose Replacement (RESS From Radiator Outlet Tee To A/Separator)

Callout	Component Name
Danger: Before conducting any repair to this high voltage cooling system, it is necessary to determine/verify whether no high-voltage system faults exist. If high-voltage faults exist, follow published DTC diagnostics/repair procedures prior to performing any cooling system repairs. Failure to correct High Voltage Faults before working on the high voltage cooling system could result in personal injury or death. **Preliminary Procedure** 1. Turn vehicle power OFF and remove all keyless entry transmitters from the vehicle and secure in a place outside the vehicle. 2. Remove the front compartment sight shield. Refer to *Front Compartment Front Sight Shield Replacement on page 3-39*. 3. For access into the hose clamp remove the RESS surge tank bolts. Refer to *Radiator Surge Tank Clamp Bracket Replacement (Right Side) on page 9-279* or *Radiator Surge Tank Clamp Bracket Replacement (Left Side) on page 9-280* and *Radiator Surge Tank Support Bracket Replacement on page 9-281*. 4. Drain the drive motor battery cooling system. Refer to *Drive Motor Battery Cooling System Draining and Filling on page 9-257*.	
1	Drive Motor Battery Radiator Inlet Hose Clamp (Qty: 2) **Procedure** Reposition the drive motor battery radiator inlet hose clamps using *BO-38185* Hose Clamp Pliers. **Special Tools** *BO-38185* Hose Clamp Pliers For equivalent regional tools, refer to *Special Tools on page 10-77*.
2	Drive Motor Battery Radiator Inlet Hose **Procedure** 1. After installation, fill the coolant reservoir to the fill level. Refer to *Drive Motor Generator Power Inverter Module Cooling System Draining and Filling on page 9-264*. 2. Inspect cooling system for leaks.

Drive Motor Battery Radiator Outlet Hose Replacement

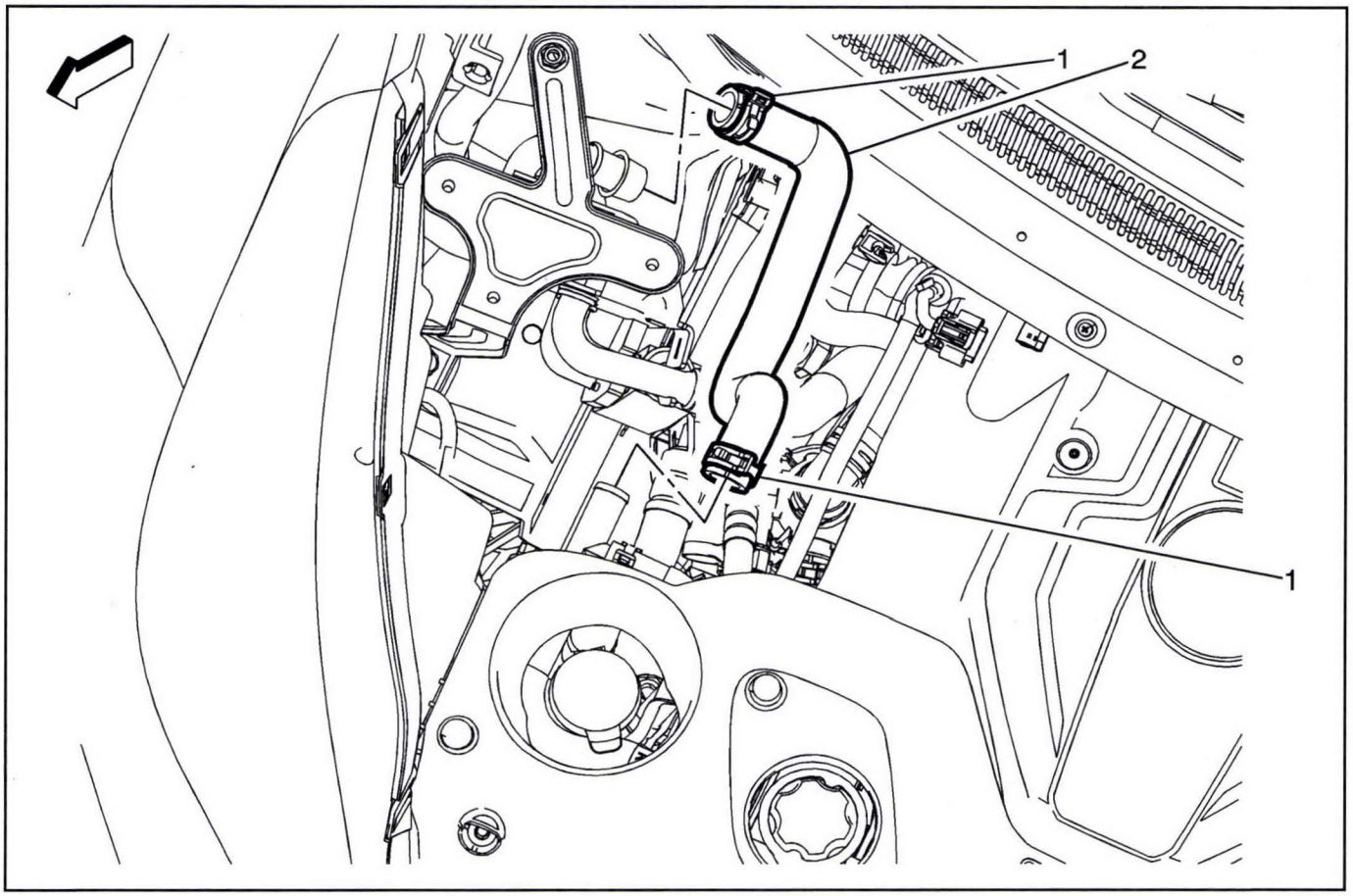

3238668

Drive Motor Battery Radiator Outlet Hose Replacement

Callout	Component Name
Danger: Before conducting any repair to this high voltage cooling system, it is necessary to determine/verify whether no high-voltage system faults exist. If high-voltage faults exist, follow published DTC diagnostics/repair procedures prior to performing any cooling system repairs. Failure to correct High Voltage Faults before working on the high voltage cooling system could result in personal injury or death. **Preliminary Procedure** 1. Turn vehicle power OFF and remove all keyless entry transmitters from the vehicle and secure in a place outside the vehicle. 2. Drain the drive motor battery cooling system. Refer to *Drive Motor Battery Cooling System Draining and Filling on page 9-257*.	
1	Drive Motor Battery Radiator Outlet Hose Clamp (Qty: 2) **Procedure** Reposition the drive motor battery radiator outlet hose clamp using *BO-38185* hose clamp pliers. **Special Tools** *BO-38185* Hose Clamp Pliers For equivalent regional tools, refer to *Special Tools on page 10-77*.
2	Drive Motor Battery Radiator Outlet Hose **Procedure** 1. Fill the coolant to the proper level. 2. Check the cooling system for leaks.

Drive Motor Battery Coolant Cooler Inlet Hose Replacement (RESS From 4way V/V(C) To Chiller)

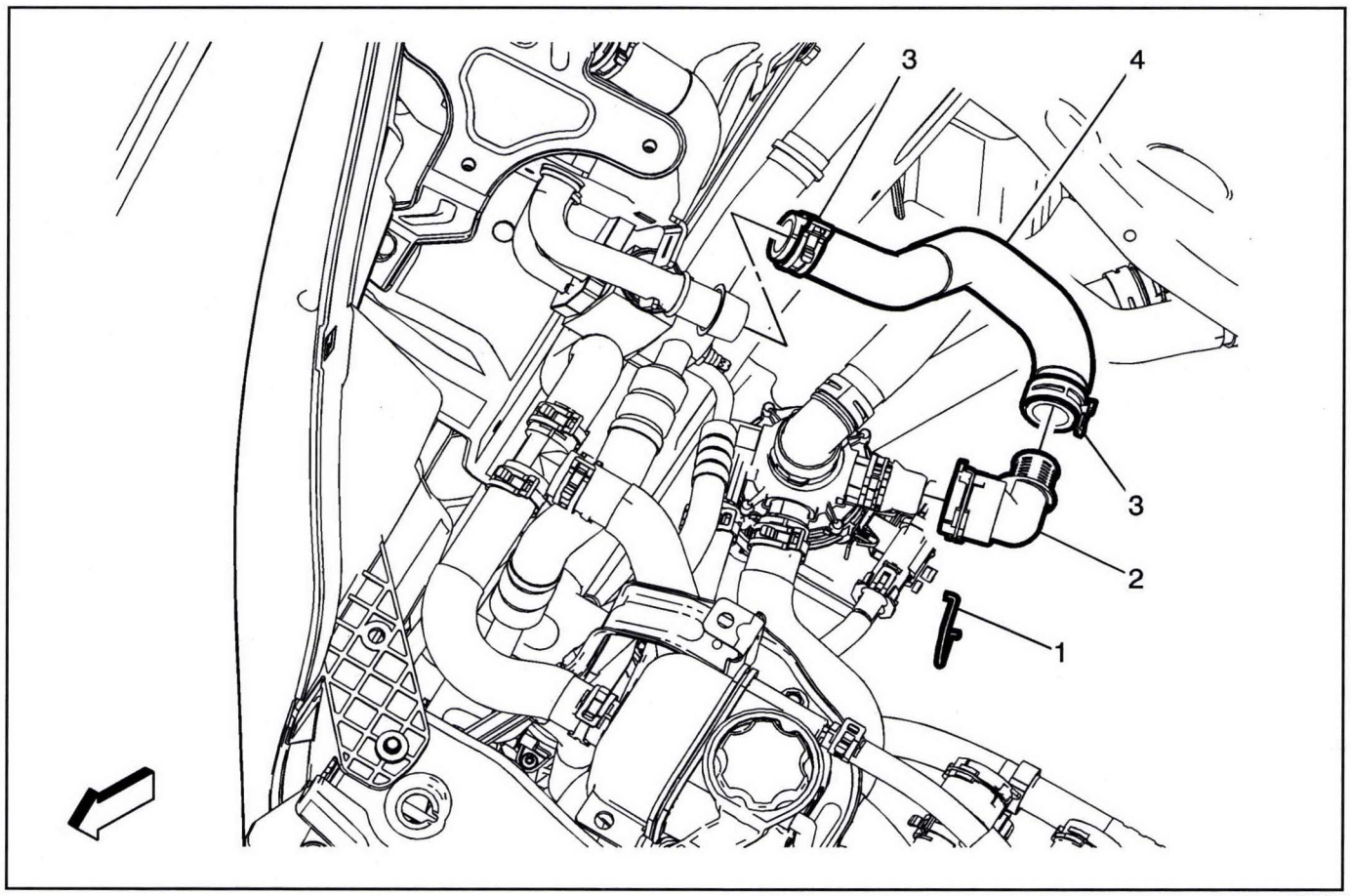

3230865

Drive Motor Battery Coolant Cooler Inlet Hose Replacement (RESS From 4way V/V(C) To Chiller)

Callout	Component Name
Danger: Before conducting any repair to this high voltage cooling system, it is necessary to determine/verify whether no high-voltage system faults exist. If high-voltage faults exist, follow published DTC diagnostics/repair procedures prior to performing any cooling system repairs. Failure to correct High Voltage Faults before working on the high voltage cooling system could result in personal injury or death. **Preliminary Procedures** 1. Turn vehicle power OFF and remove all keyless entry transmitters from the vehicle and secure in a place outside the vehicle. 2. Drain the drive motor battery cooling system. Refer to *Drive Motor Battery Cooling System Draining and Filling on page 9-257*.	
1	Drive Motor Battery Coolant Cooler Inlet Hose Retainer
2	Drive Motor Battery Coolant Cooler Inlet Hose Connector
3	Drive Motor Battery Coolant Cooler Inlet Hose Clamp (Qty: 2) **Procedure** Reposition the drive motor battery coolant cooler inlet hose clamp using *BO-38185* hose clamp pliers. **Special Tools** *BO-38185* Hose Clamp Pliers For equivalent regional tools, refer to *Special Tools on page 10-77*.
4	Drive Motor Battery Coolant Cooler Inlet Hose **Procedures** 1. Fill the cooling system to the proper level. 2. Inspect the cooling system for leaks.

High Voltage Battery Cooling Manifold Inlet Hose Replacement (Coolant to all Battery Cells)

Removal Procedure

Special Tools

BO-38185 Hose Clamp Pliers

For equivalent regional tools, refer to *Special Tools on page 10-77*.

Danger: Always perform the High Voltage Disabling procedure prior to servicing any High Voltage component or connection. Personal Protection Equipment (PPE) and proper procedures must be followed.

The High Voltage Disabling procedure includes the following steps:

- ***Identify how to disable high voltage.***
- ***Identify how to test for the presence of high voltage.***
- ***Identify condition under which high voltage is always present and personal protection equipment (PPE) and proper procedures must be followed.***

Before working on any high voltage system, be sure to wear the following Personal Protection Equipment:

- ***Safety glasses with appropriate side shields when within 15 meters (50 feet) of the vehicle, either indoors or outdoors.***
- ***Certified and up-to-date Class "0" Insulation gloves rated at 1000V with leather protectors.***
  - ***Visually and functionally inspect the gloves before use.***
  - ***Wear the Insulation gloves with leather protectors at all times when working with the high voltage battery assembly, whether the system is energized or not.***

Failure to follow the procedures may result in serious injury or death.

1. Remove the drive motor battery. Refer to *Drive Motor Battery Replacement and Shipping Preparation on page 9-524*.
2. Remove the drive motor battery cover. Refer to *Drive Motor Battery Cover Replacement on page 9-449*.

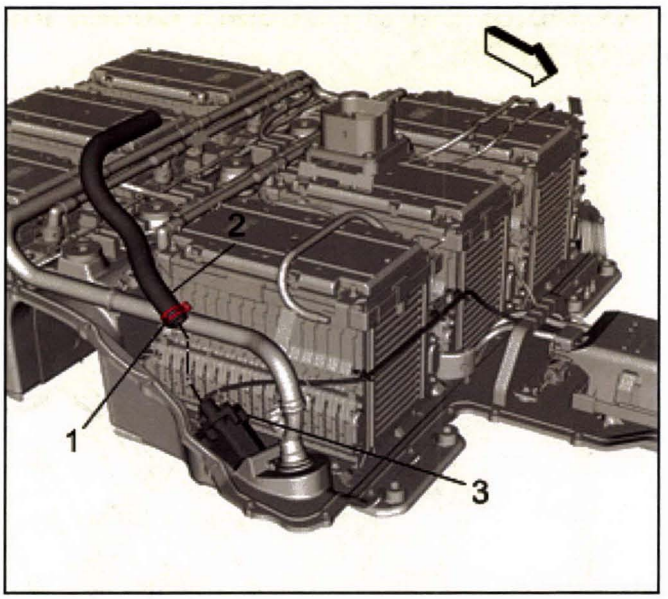

3703764

Note: Remove coolant from the battery pack internal components prior to disconnecting hose connections.

3. Reposition the cell battery cooling manifold inlet hose clamp (1), using *BO-38185* hose clamp pliers.
4. Remove the cell battery cooling manifold inlet hose (2) from the high voltage battery heater (3).

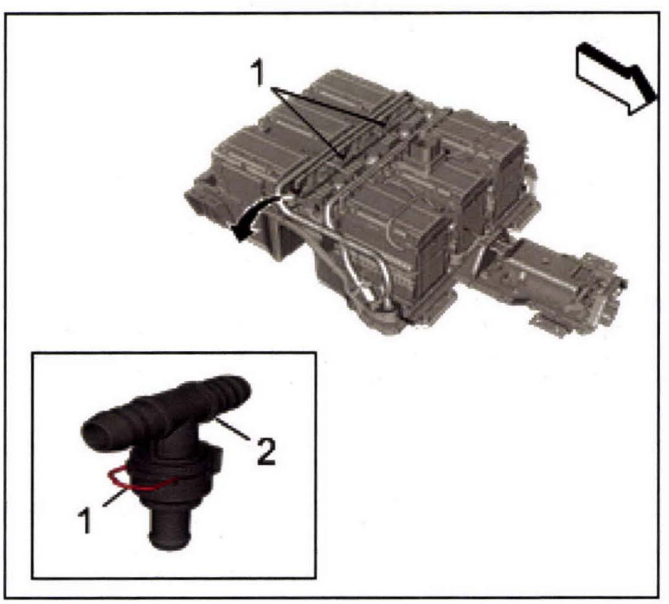

3703765

5. Using an appropriate tool, release the retaining clips (1) , securing the cell battery cooling manifold inlet pipe (2), to the one side of the battery cell connectors.

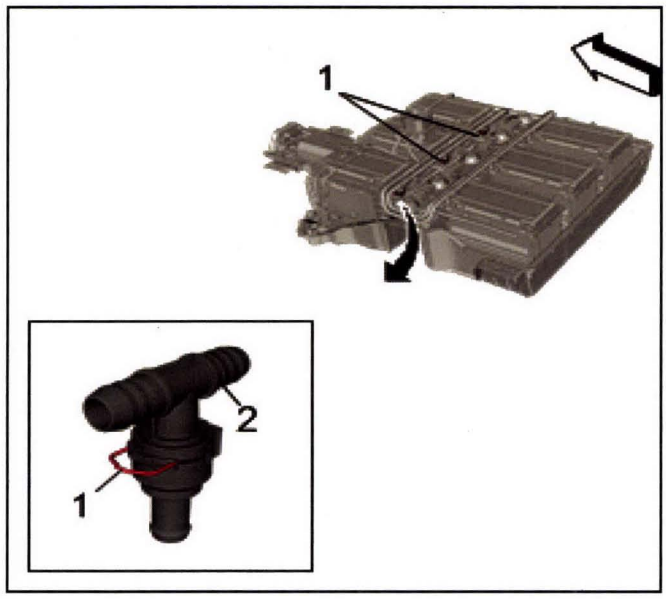

3703768

6. Using an appropriate tool, release the retaining clips (1) , securing the cell battery cooling manifold inlet pipe (2), to the one side of the battery cell connectors.

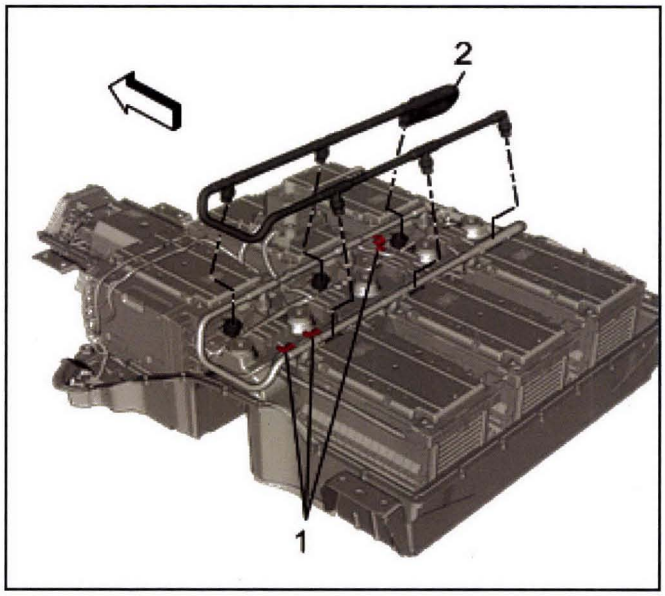

3703769

7. Remove the retaining clips (1) and remove the cell battery cooling manifold inlet pipe (2) from the drive motor battery.

Installation Procedure

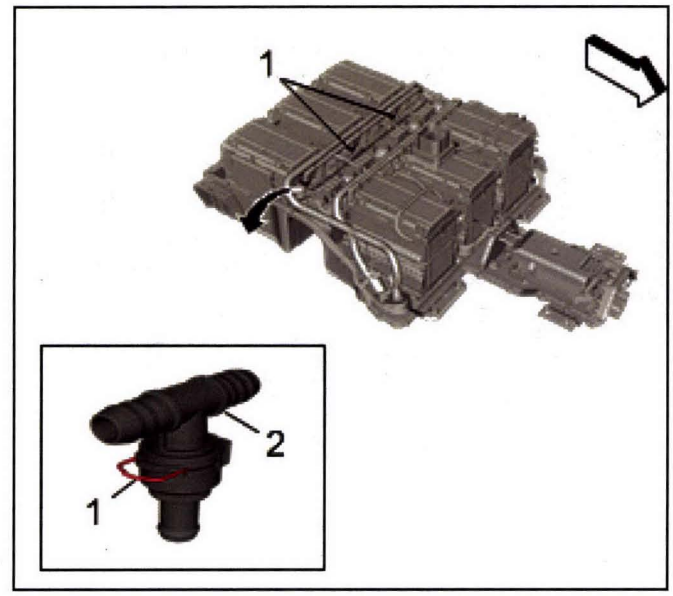

3703765

1. Close clips (1) prior to installing cooling manifold pipe (2).

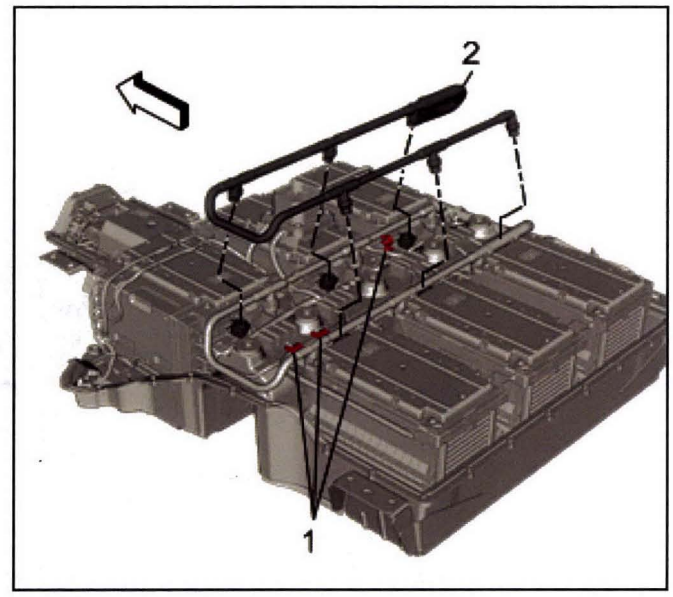

3703769

2. Install the cell battery cooling manifold inlet pipe (2) into the cell battery connectors until you hear the clips snap into position.
3. Secure the cell battery cooling manifold inlet pipe with the retaining clips (1).
4. Push pull to ensure the manifold is fully installed.

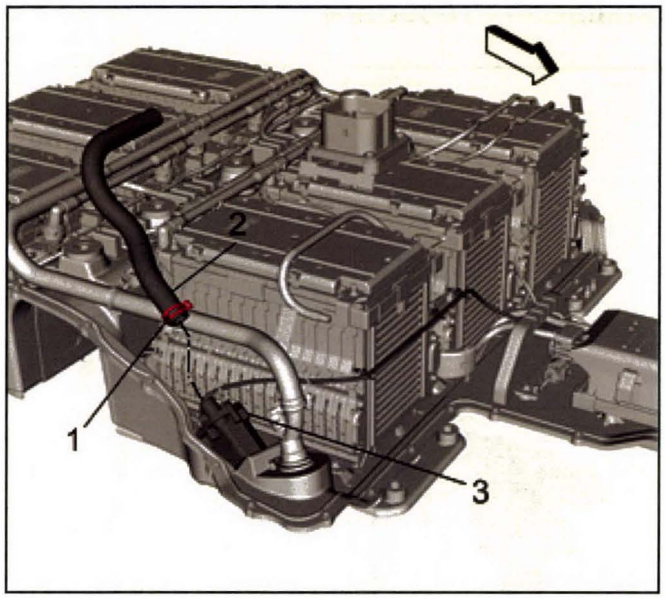

3703764

5. Install the cell battery cooling manifold inlet hose (2) to the high voltage battery heater (3).
6. Position the cell battery cooling manifold inlet hose clamp (1), using *BO-38185* hose clamp pliers.
7. Install the drive motor battery cover. Refer to *Drive Motor Battery Cover Replacement on page 9-449*.
8. Install the drive motor battery. Refer to *Drive Motor Battery Replacement and Shipping Preparation on page 9-524*.

High Voltage Battery Cooling Manifold Inlet Hose Replacement (Individual Battery Cell Coolant Inlet Hose)

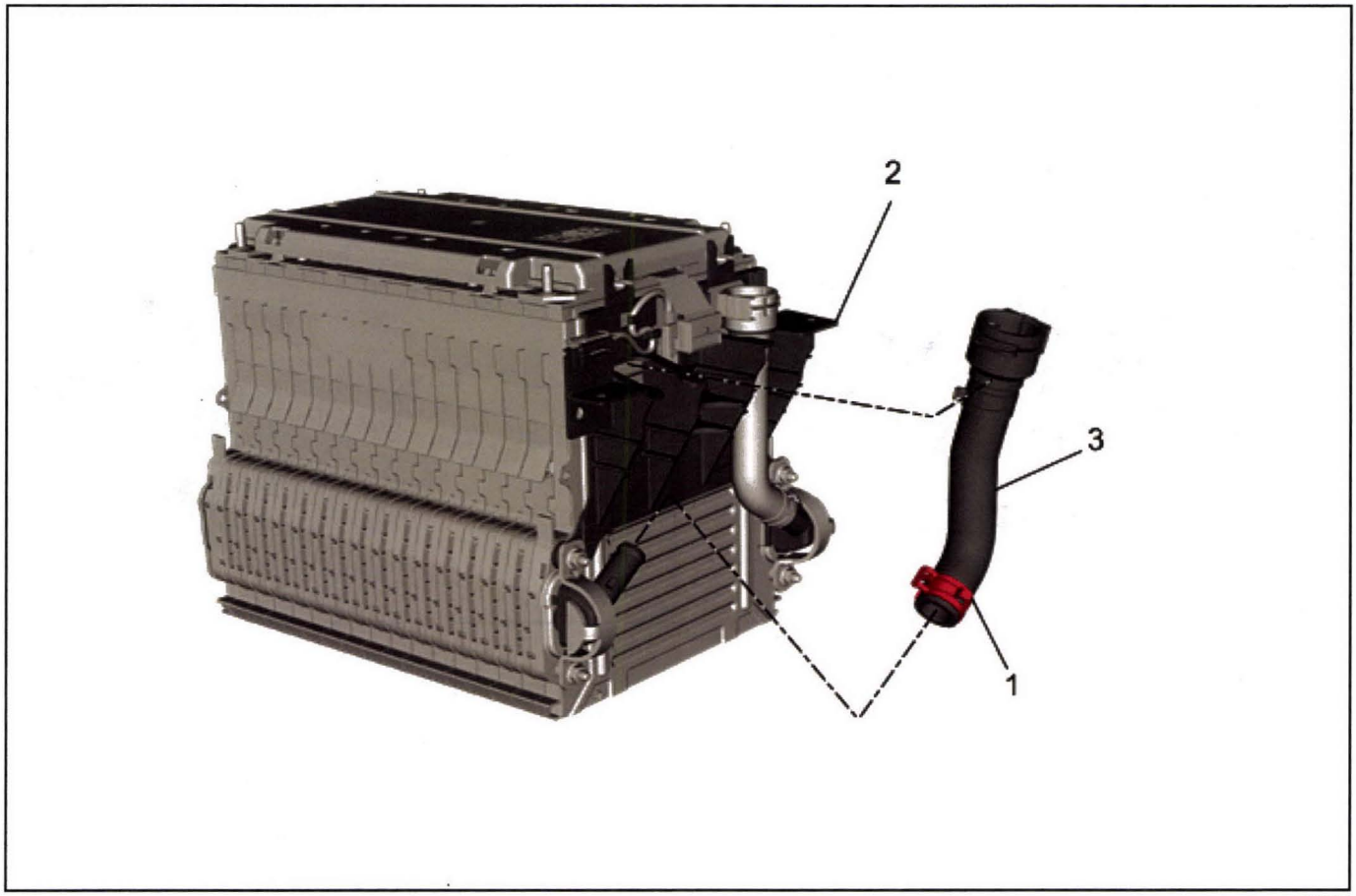

3738091

High Voltage Battery Cooling Manifold Inlet Hose Replacement (Individual Battery Cell Coolant Inlet Hose)

Callout	Component Name
Danger: Ensure all High Voltage safety procedures are followed. Failure to follow the procedure exactly as written may result in serious injury or death. ***Danger: Before working on any high voltage system, be sure to wear the following Personal Protection Equipment:*** • ***Safety glasses with appropriate side shields when within 50 feet of the vehicle, either indoors or outdoors*** • ***Certified and up-to-date Class "0" Insulation gloves rated at 1000V with leather protectors*** – ***Visually and functionally inspect the gloves before use.*** – ***Wear the Insulation gloves at all times when working with the high voltage battery assembly, whether the system is energized or not.*** ***Failure to follow the procedure exactly as written may result in serious injury or death.*** **Preliminary Procedure** 1. Remove the drive motor battery. Refer to *Drive Motor Battery Replacement and Shipping Preparation on page 9-524*. 2. Remove the drive motor battery cover. Refer to *Drive Motor Battery Cover Replacement on page 9-449*. 3. Remove the battery cell. Refer to *Cell Battery Replacement (Battery Cell 1) on page 9-462* or *Cell Battery Replacement (Battery Cell 2) on page 9-467* or *Cell Battery Replacement (Battery Cell 3) on page 9-473* or *Cell Battery Replacement (Battery Cell 4) on page 9-479* or *Cell Battery Replacement (Battery Cell 5) on page 9-485* or *Cell Battery Replacement (Battery Cell 6) on page 9-490*.	
1	**Special Tools** *BO-38185* Hose Clamp Pliers For equivalent regional tools, refer to *Special Tools on page 10-77*. Battery Cell Coolant Inlet Hose Clamp
2	Drive Motor Battery Coolant Cooler Bracket
3	Battery Cell Coolant Inlet Hose

High Voltage Battery Cooling Manifold Outlet Hose Replacement (Coolant to all Battery Cells)

Removal Procedure

Special Tools

BO-38185 Hose Clamp Pliers

For equivalent regional tools, refer to *Special Tools on page 10-77*.

Danger: Always perform the High Voltage Disabling procedure prior to servicing any High Voltage component or connection. Personal Protection Equipment (PPE) and proper procedures must be followed.

The High Voltage Disabling procedure includes the following steps:

- ***Identify how to disable high voltage.***
- ***Identify how to test for the presence of high voltage.***
- ***Identify condition under which high voltage is always present and personal protection equipment (PPE) and proper procedures must be followed.***

Before working on any high voltage system, be sure to wear the following Personal Protection Equipment:

- ***Safety glasses with appropriate side shields when within 15 meters (50 feet) of the vehicle, either indoors or outdoors.***
- ***Certified and up-to-date Class "0" Insulation gloves rated at 1000V with leather protectors.***
  - ***Visually and functionally inspect the gloves before use.***
  - ***Wear the Insulation gloves with leather protectors at all times when working with the high voltage battery assembly, whether the system is energized or not.***

Failure to follow the procedures may result in serious injury or death.

1. Remove the drive motor battery. Refer to *Drive Motor Battery Replacement and Shipping Preparation on page 9-524*.
2. Remove the drive motor battery cover. Refer to *Drive Motor Battery Cover Replacement on page 9-449*.

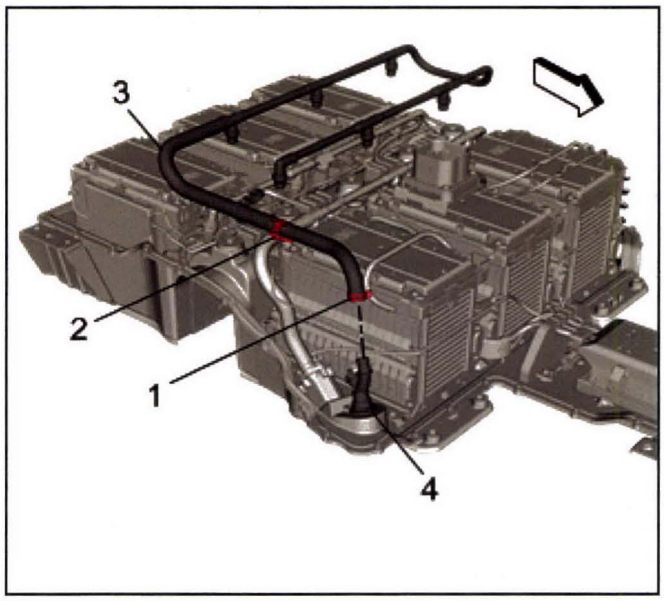

3704201

Note: Remove the coolant from the battery pack internal components prior to disconnecting hose connections.

3. Reposition the cell battery cooling manifold outlet hose clamp (1), using *BO-38185* hose clamp pliers.
4. Remove the cell battery cooling manifold outlet hose (3) from the drive motor battery coolant temperature sensor (4).
5. Disconnect the cell battery cooling manifold outlet hose retainer (2).

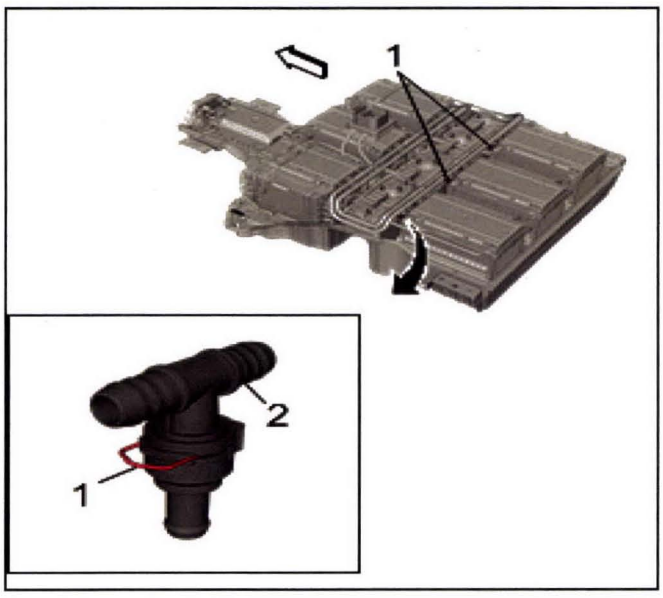

3704206

6. Using an appropriate tool, release the retaining clips (1), securing the cell battery cooling manifold outlet pipe (2), to the one side of the battery cell connectors.

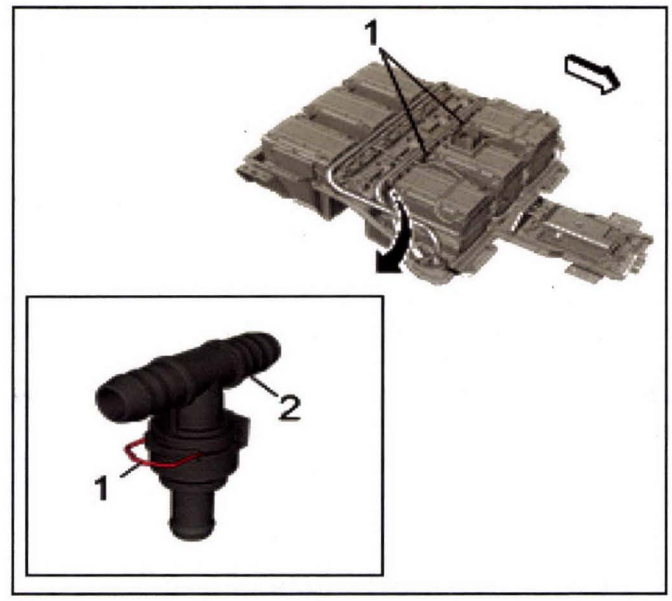

3704210

7. Using an appropriate tool, release the retaining clips (1), securing the cell battery cooling manifold outlet pipe (2), to the one side of the battery cell connectors.

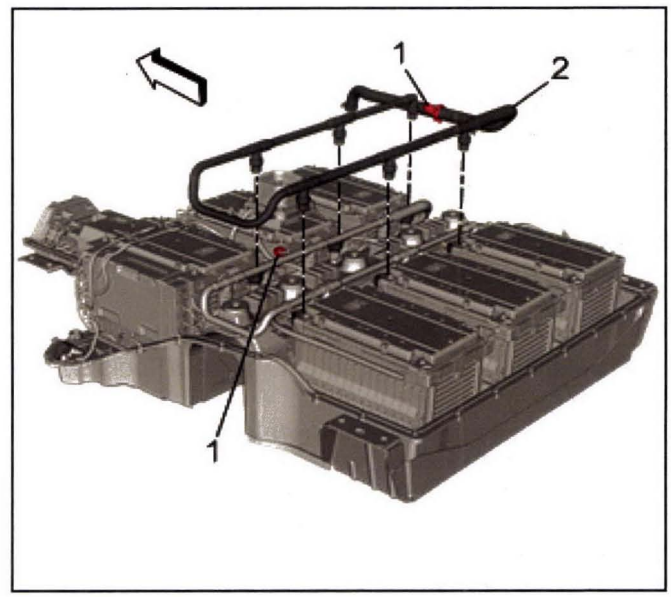

3704217

8. Remove the retaining clips (1) and remove the cell battery cooling manifold outlet pipe (2) from the drive motor battery.

Installation Procedure

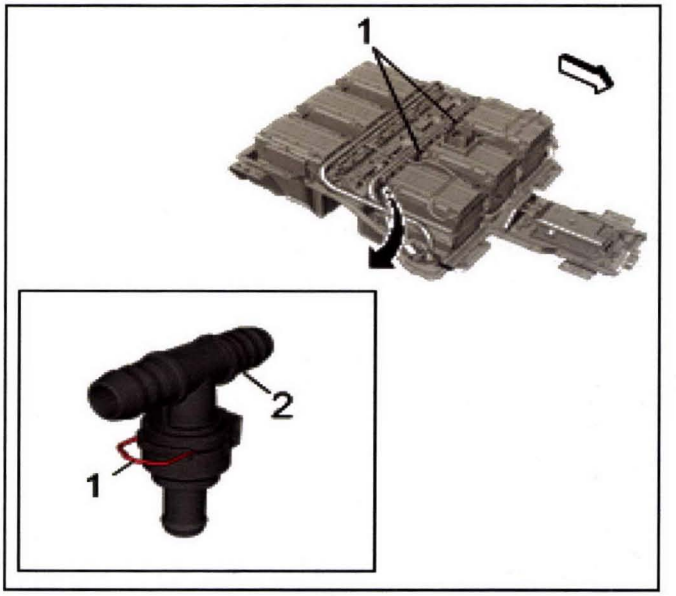

3704210

1. Close clips (1) prior to installing cooling manifold pipe (2).

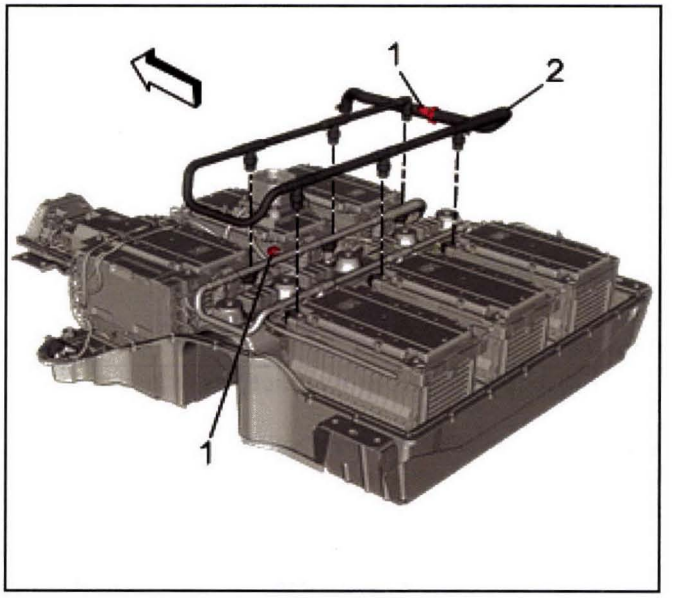

3704217

2. Install the cell battery cooling manifold outlet pipe (2) into the cell battery connectors until you hear the clips snap into position.
3. Push pull to ensure the manifold is fully installed.
4. Secure the cell battery cooling manifold outlet pipe with the retaining clips (1).

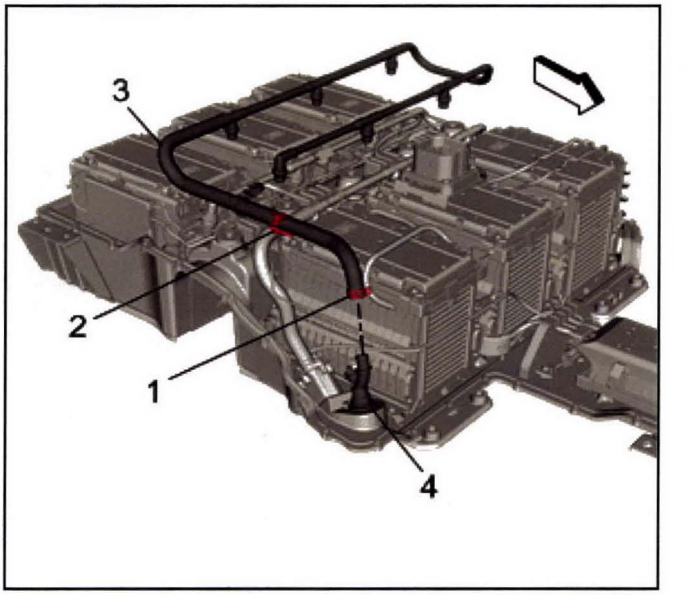

3704201

5. Install the cell battery cooling manifold outlet hose (3) to the drive motor battery coolant temperature sensor (4).
6. Position the cell battery cooling manifold outlet hose clamp (1), using *BO-38185* hose clamp pliers.
7. Connect the cell battery cooling manifold outlet hose retainer (2).
8. Install the drive motor battery cover. Refer to *Drive Motor Battery Cover Replacement on page 9-449*.
9. Install the drive motor battery. Refer to *Drive Motor Battery Replacement and Shipping Preparation on page 9-524*.

High Voltage Battery Cooling Manifold Outlet Hose Replacement (Individual Battery Cell Coolant Outlet Hose)

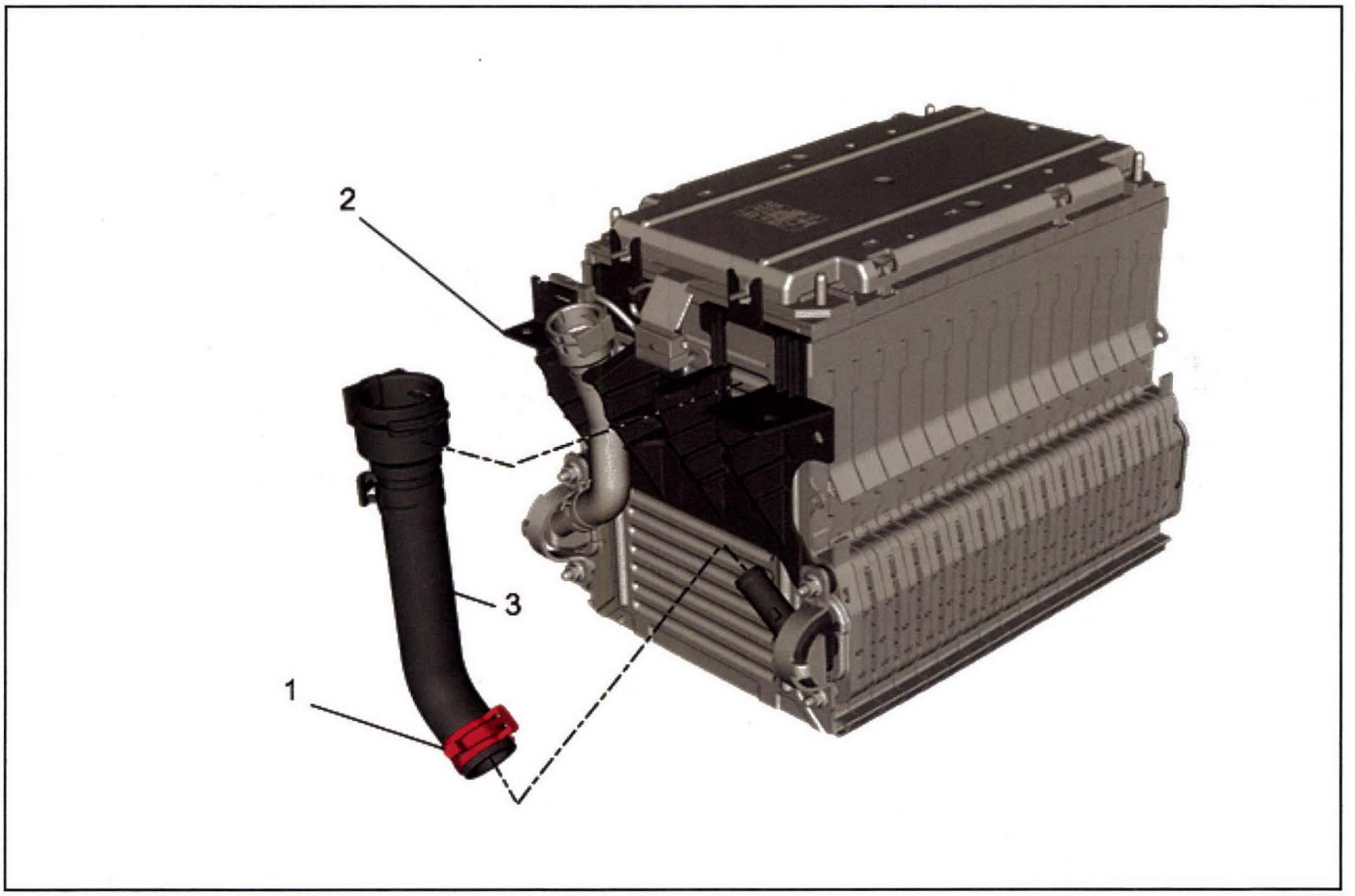

3738094

High Voltage Battery Cooling Manifold Outlet Hose Replacement (Individual Battery Cell Coolant Outlet Hose)

Callout	Component Name
Danger: Ensure all High Voltage safety procedures are followed. Failure to follow the procedure exactly as written may result in serious injury or death. ***Danger: Before working on any high voltage system, be sure to wear the following Personal Protection Equipment:*** • ***Safety glasses with appropriate side shields when within 50 feet of the vehicle, either indoors or outdoors*** • ***Certified and up-to-date Class "0" Insulation gloves rated at 1000V with leather protectors*** – ***Visually and functionally inspect the gloves before use.*** – ***Wear the Insulation gloves at all times when working with the high voltage battery assembly, whether the system is energized or not.*** ***Failure to follow the procedure exactly as written may result in serious injury or death.*** **Preliminary Procedure** 1. Remove the drive motor battery. Refer to *Drive Motor Battery Replacement and Shipping Preparation on page 9-524*. 2. Remove the drive motor battery cover. Refer to *Drive Motor Battery Cover Replacement on page 9-449*. 3. Remove the battery cell. Refer to *Cell Battery Replacement (Battery Cell 1) on page 9-462* or *Cell Battery Replacement (Battery Cell 2) on page 9-467* or *Cell Battery Replacement (Battery Cell 3) on page 9-473* or *Cell Battery Replacement (Battery Cell 4) on page 9-479* or *Cell Battery Replacement (Battery Cell 5) on page 9-485* or *Cell Battery Replacement (Battery Cell 6) on page 9-490*.	
1	**Special Tools** *BO-38185* Hose Clamp Pliers For equivalent regional tools, refer to *Special Tools on page 10-77*. Battery Cell Coolant Outlet Hose Clamp
2	Drive Motor Battery Coolant Cooler Bracket
3	Battery Cell Coolant Outlet Hose

Hybrid/EV Battery Pack Coolant Control Valve Learn

Note:

- DO NOT program a control module unless directed to by a service procedure or a service bulletin. If the control module is not properly configured with the correct calibration software, the control module will not control all of the vehicle features properly.
- Ensure the programming tool is equipped with the latest software and is securely connected to the data link connector. If there is an interruption during programming, programming failure or control module damage may occur.
- Stable battery voltage is critical during programming. Any fluctuation, spiking, over voltage or loss of voltage will interrupt programming. When required install the *EL-49642* SPS Programming Support Tool to maintain system voltage. If not available, connect a fully charged 12 V jumper or booster pack disconnected from the AC voltage supply. DO NOT connect a battery charger.
- Turn OFF or disable systems that may put a load on the vehicles battery such as; interior lights, exterior lights (including daytime running lights), HVAC, radio, etc.
- During the programming procedure, follow the SPS prompts for the correct ignition switch position.
- Clear DTCs after programming is complete. Clearing powertrain DTCs will set the Inspection/ Maintenance (I/M) system status indicators to NO.

Reference Information

Special Tools

EL-49642 SPS Programming Support Tool

For equivalent regional tools, refer to *Special Tools on page 6-19*.

Diagnostic Aids

The Hybrid/EV Battery Pack Coolant Control Valve Learn procedure must be completed when the following components are replaced:

- Hybrid/EV Powertrain Control Module 2
- Hybrid/EV Battery Pack Coolant Control Solenoid Valve

Hybrid/EV Battery Pack Coolant Control Valve Learn

The Hybrid/EV Battery Pack Coolant Control Valve Learn procedure can be completed with a scan tool using the following steps:

1. Install *EL-49642* SPS programming support tool.
2. Vehicle in Service Mode.
3. With a scan tool, select Hybrid/EV Powertrain Control Module 2 Configuration/Reset Functions. Perform the Learn Functions - Hybrid/EV Battery Pack Coolant Control Valve Learn and follow the on-screen instructions.
4. With a scan tool, Clear All DTCs.

Unsuccessful Programming Recovery

In the event of an interrupted or unsuccessful programming event, perform the following steps:

1. Ignition ON. Ensure the control module, DLC and programming tool connections are secure and the SPS software is up to date.
2. Verify the control module can be reprogrammed.

⇒ **If the control module cannot be reprogrammed**

2.1. Ignition OFF for one minute, ignition ON.

2.2. Verify the control module can be reprogrammed.

⇒ If the control module cannot be reprogrammed, replace the control module.

⇓ If the control module can be reprogrammed.

2.3. All OK.

⇓ **If the control module can be reprogrammed**

3. All OK.

Repair Instructions

Perform the *Diagnostic Repair Verification on page 6-123* after completing the repair.

Control Module References on page 6-3 for hybrid/EV powertrain control module 2 replacement, programming and setup.

Description and Operation

Hybrid Cooling System Description and Operation

This vehicle is equipped with four fully independent cooling systems. The hybrid/EV electronics cooling system is dedicated to cooling the battery charger, 14 V accessory power module and the drive motor generator power inverter module. The hybrid/EV battery pack cooling system is dedicated to cooling and heating the high voltage hybrid/EV battery. The cabin heater cooling system is dedicated to providing heat to the passenger compartment. The drive motor cooling system is dedicated to cooling the drive unit

Hybrid Electronics Cooling System Description and Operation

The primary purpose of the hybrid/EV electronics cooling loop is to cool the on-board charge module, when it is plugged in, the 14 V accessory power inverter module to maintain accessory load and the drive motor generator power inverter module, while propulsion is enabled. . The hybrid/EV electronics cooling system uses the hybrid/EV electronics radiator, a 12 V pulse width modulated (PWM) radiator fan, a 12 V hybrid/EV electronics coolant pump to circulate coolant through the drive motor battery charger, 14 V accessory power module and the drive motor generator power inverter module . The hybrid/EV powertrain control module 2 activates the hybrid/EV electronics coolant pump and monitors a temperature sensor in the hybrid/EV electronics radiator. The hybrid/EV powertrain control module 2 monitors the hybrid/EV electronics cooling system temperature to determine when to operate the

radiator fan. The hybrid/EV electronics coolant pump will be activated when the vehicle is on and during charging. The hybrid/EV electronics radiator is combined with the transmission radiator to form one radiator assembly. The hybrid/EV electronics coolant pump and radiator cooling fan will also be enabled during an after-run event which is determined by coolant loop temperature.

The hybrid/EV electronics cooling system circulates a pre-mixed DEX-COOL® which is a 50/50 mixture of DEX-COOL® and de-ionized water. De-ionized water is required for high voltage isolation and to prevent corrosion from effecting heat sink performance. Always use pre-mixed coolant and never use tap water in the hybrid/EV electronics coolant system.

Hybrid/EV Battery Pack Cooling System Description and Operation

The energy storage system cooling system uses a battery radiator, a 12 V pulse width modulated (PWM) radiator fan, a 12 V hybrid/EV battery pack coolant pump, a refrigerant/coolant heat exchanger (chiller), a battery mounted cold/hot plate, the electric A/C compressor motor control module assembly, refrigerant pressure and temperature sensors, ambient air temperature sensor, and a hybrid/EV battery pack coolant flow control valve to cool down the high voltage hybrid/EV battery. There is also a high voltage heater inside the hybrid/EV battery to heat the coolant entering the battery mounted cold/hot plate when needed. The hybrid/EV powertrain control module 2 monitors the hybrid/EV battery coolant temperature, hybrid/EV battery cell temperature, refrigerant temperature and refrigerant pressure. The hybrid/EV powertrain control module 2 determines how much hybrid/EV battery cooling or heating is required and turns on the hybrid/EV battery pack coolant pump, positions the hybrid/EV battery pack coolant flow control valve and depending on what is required will operate the radiator fan, request the A/C compressor module to turn on the high voltage A/C compressor, or turn on the high voltage hybrid/EV battery pack heater. The hybrid/EV battery pack cooling system could be activated when the vehicle is operating, during charging, or when the vehicle is OFF and maintaining the hybrid/EV battery pack temperature. Refer to *Automatic HVAC Description and Operation on page 10-144*.

The hybrid/EV battery pack coolant control valve is used to manage the flow of coolant circulating through the hybrid/EV battery temperature control system. The valve has one input port and three output ports, identified as Radiator, Bypass, and Chiller. The valve has an internal valve body that is rotated by the valve motor to different positions to control which fluid ports are connected. The valve operates through 90 degrees. When the valve is directing coolant to the Radiator port, coolant is routed through a front-mounted heat exchanger. When the valve is in the Bypass position, coolant is routed through the battery pack without passing through additional heat exchangers. When the valve is in the Chiller position coolant is routed through a heat exchanger that allows the A/C cooling system to reduce coolant temperature. The valve can be moved to several intermediate positions between Bypass and Chiller, for blended cooling of the hybrid/EV battery pack coolant for optimum efficiency.

The valve provides position feedback to the hybrid/EV powertrain control module based on a potentiometer in the valve. The hybrid/EV powertrain control module uses this feedback to monitor the valve position. Different valve positions correspond to different resistance values. When the vehicle is first turned ON the hybrid/EV powertrain control module determines and records the sensor values corresponding to the end-stop positions of the valve by moving the valve to an end-stop and back to its original position. This is referred to as the hybrid/EV powertrain control module "diagnostic learn" of the valve. This provides a valve shaft breakage test and allows the hybrid/EV powertrain control module to "learn" the position feedback value that corresponds to that end-stop. The end-stop that is used at each vehicle power cycle, alternates between each end-stop.

The hybrid/EV battery pack cooling system circulates a pre-mixed DEX-COOL® which is a 50/50 mixture of DEX-COOL® and de-ionized water. De-ionized water is required for high voltage isolation and to prevent corrosion from effecting heat sink performance. Always use pre-mixed coolant and never use tap water in the battery coolant system.

Passenger Compartment Heater System Description and Operation

The passenger compartment heater system uses the 12 V auxiliary heater coolant pump, a high voltage coolant heater control module and a heater core.

The HVAC control module turns on the auxiliary heater coolant pump and monitors the temperature sensors in the passenger compartment and coolant loop to determine if the high voltage cabin heater control module is needed. Passenger compartment heat is provided by air flowing through the heater core. The heater core is heated by coolant from the high voltage cabin heater control module. The hybrid/EV powertrain control module will operate the auxiliary heater coolant pump and coolant heater control module to maximize efficiency depending on the passenger compartment heat requirements.

The passenger compartment heater cooling system circulates a 50/50 mixture of DEX-COOL® and deionized water.

Special Tools and Equipment

Illustration	Tool Number/ Description
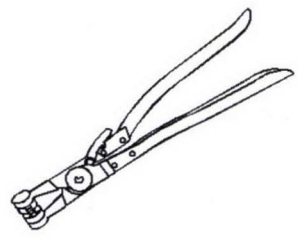 14013	BO 38185 J 38185 Hose Clamp Pliers

Illustration	Tool Number/ Description
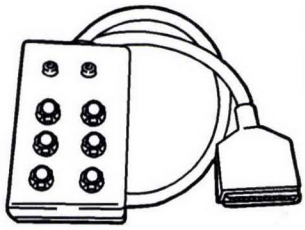 1985315	EL 48571–25 High Voltage Battery Pin Out Box
1984818	EL 48900 HEV Safety Kit
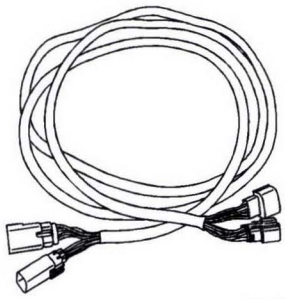 2570155	EL 50211 Low Voltage Harness
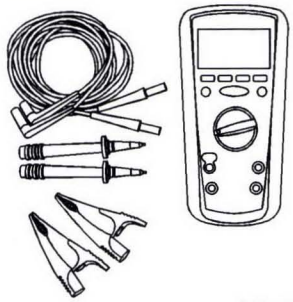 2630648	EL 50772 Insulation Multimeter
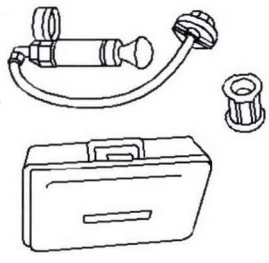 1405	EN 24460-A J 24460-A Cooling System Pressure Tester

Illustration	Tool Number/ Description
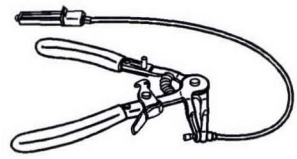 1409012	EN 6182-3 GE 47622 GE 49731 Hose Clamp Pliers
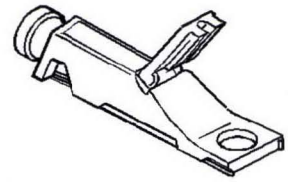 12869	GE 26568 J 26568 Coolant and Battery Tester
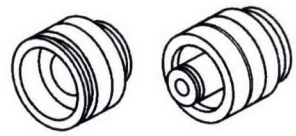 1385126	GE 46143-2 J 46143-2 Cooling System Adapter
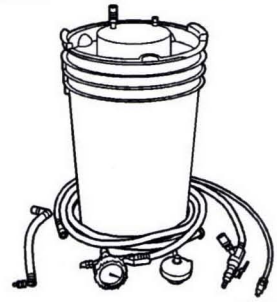 1617830	GE 47716 Vac-N-Fill Coolant Refill Tool
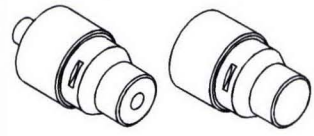 2567409	GE 50385 Battery Pack Cooling Passage Test Adapter

Illustration	Tool Number/ Description
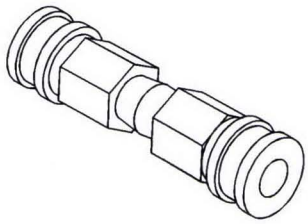 2567441	GE 50389 Coolant Pressure Test Quick Connector

Hybrid/EV Energy Storage

Specifications

Fastener Tightening Specifications

Application	Specification	
	Metric	English
300 Volt Battery Positive and Negative Connector Fastener	9 N•m	80 lb in
300 Volt Battery Positive and Negative Cable Conduit Fastener	9 N•m	80 lb in
Battery Cable Fastener	9 N•m	80 lb in
Battery Cable to APM Module Fastener	22 N•m	16 lb ft
Battery Negative Cable Extension Fastener	22 N•m	16 lb ft
Drive Motor Battery Charger Mounting Fasteners	22 N•m	16 lb ft
Drive Motor Battery Mounting Fastener	56 N•m	41 lb ft
Heater Coolant Heater Bracket Fasteners	22 N•m	16 lb ft

Schematic and Routing Diagrams

Hybrid/EV Energy Storage Schematics (Battery Energy and Interface Control Module Power, Ground, and Data Communication)

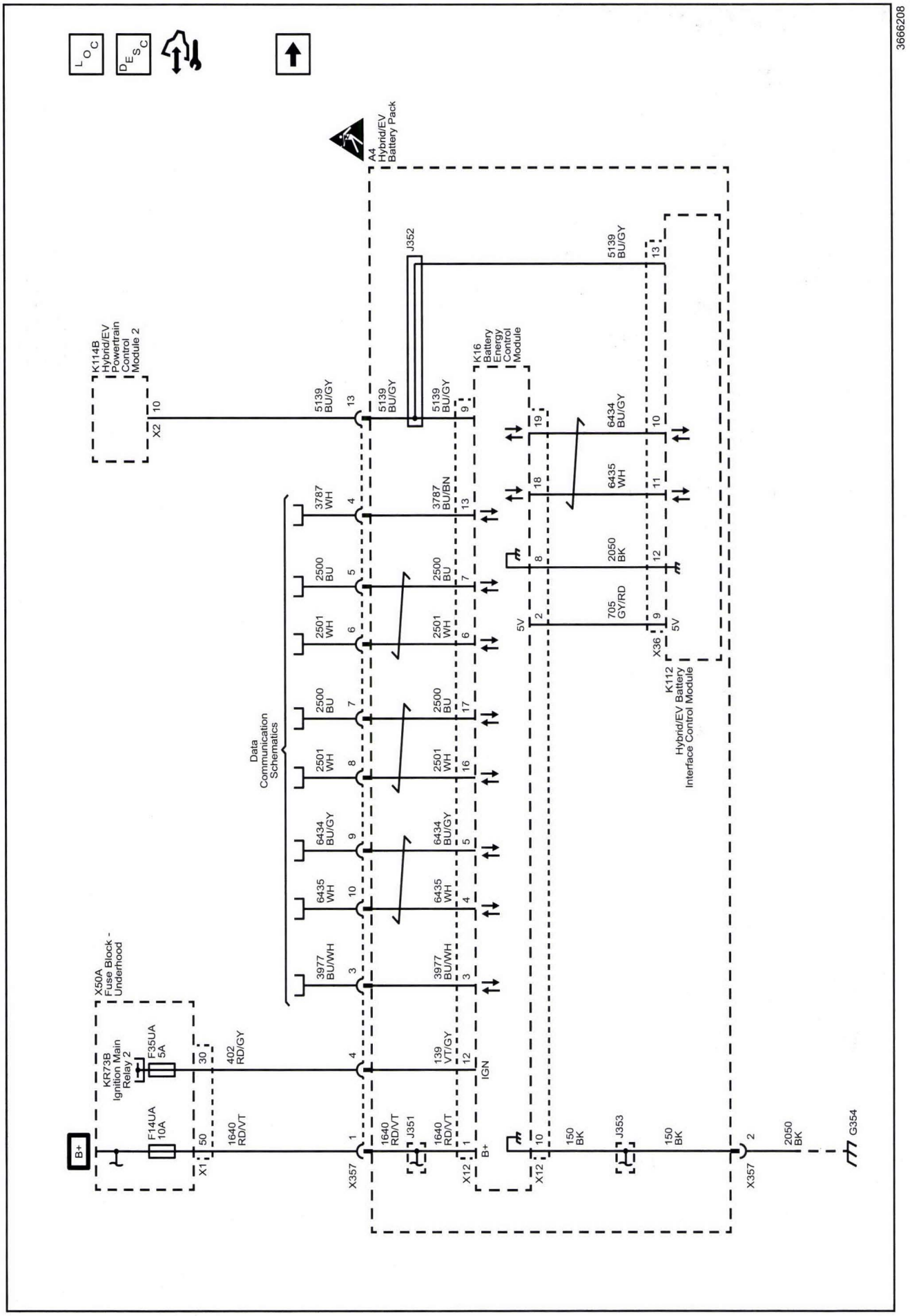

Hybrid/EV Energy Storage Schematics (Hybrid/EV Module Powertrain Control Module 2 Power, Ground and Data Communication)

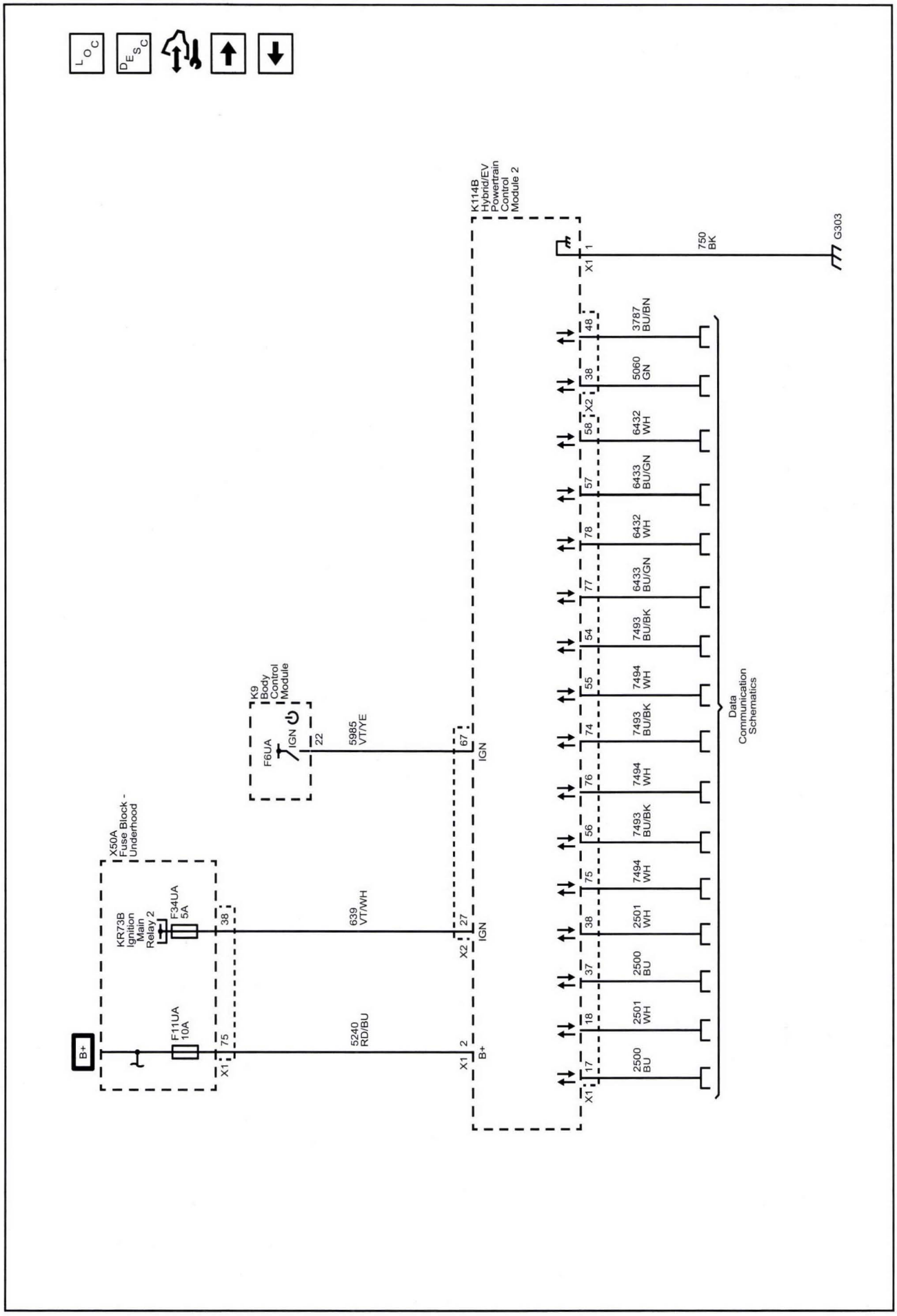

Hybrid/EV Energy Storage Schematics (High Voltage Interlock Loop - Main)

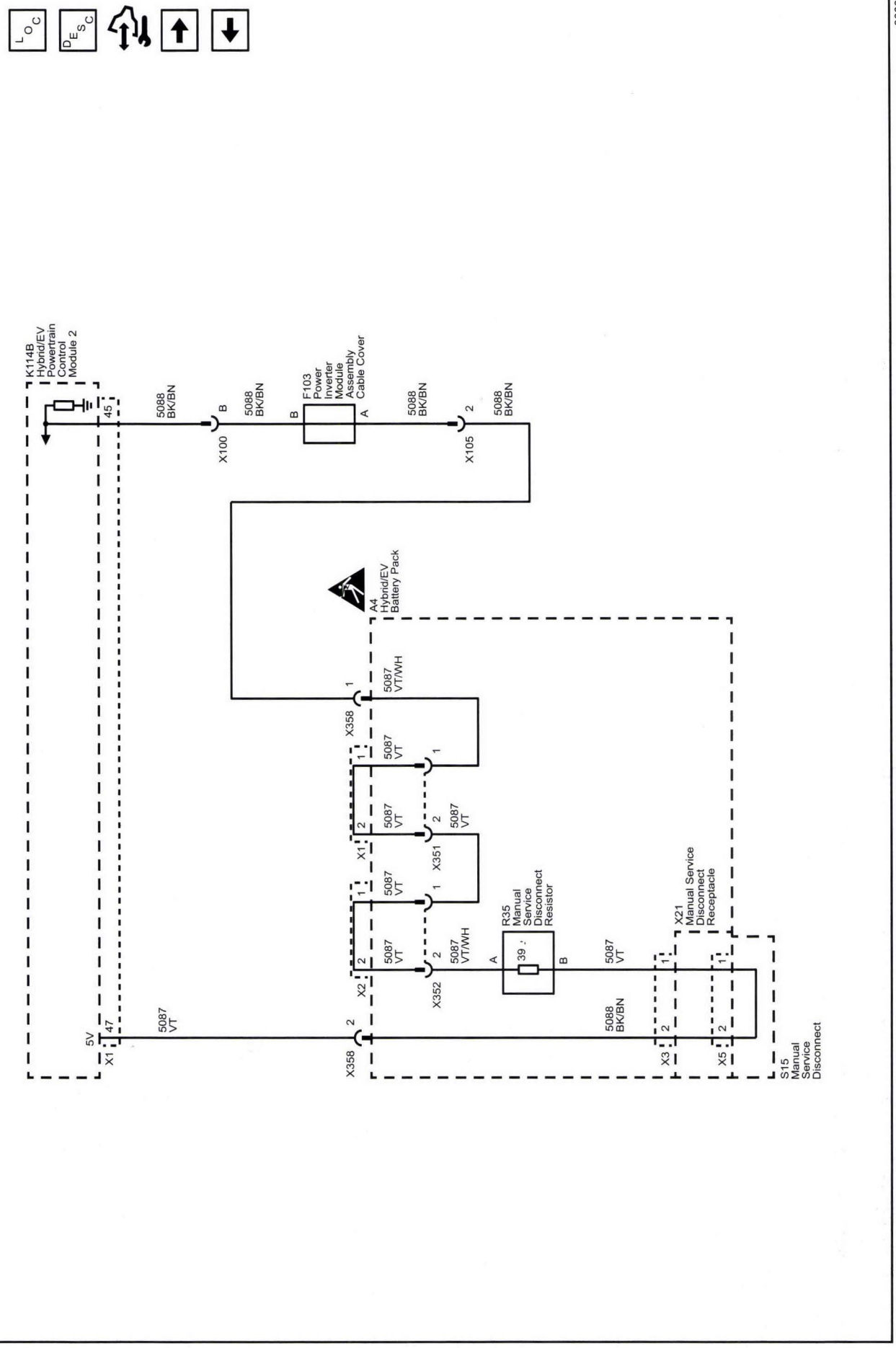

Hybrid/EV Energy Storage Schematics (Hybrid/EV Battery Section 1)

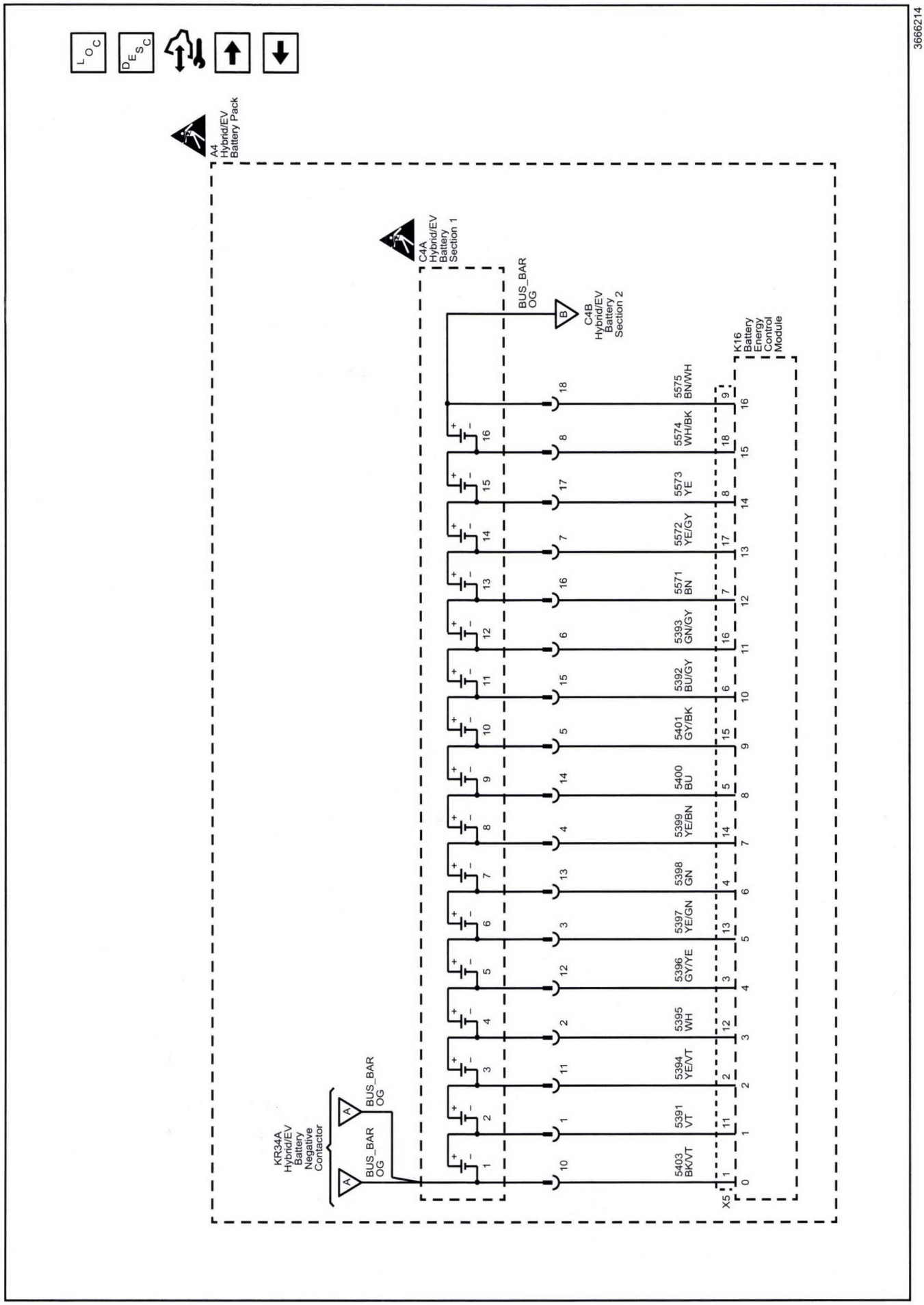

Hybrid/EV Energy Storage Schematics (Hybrid/EV Battery Section 2)

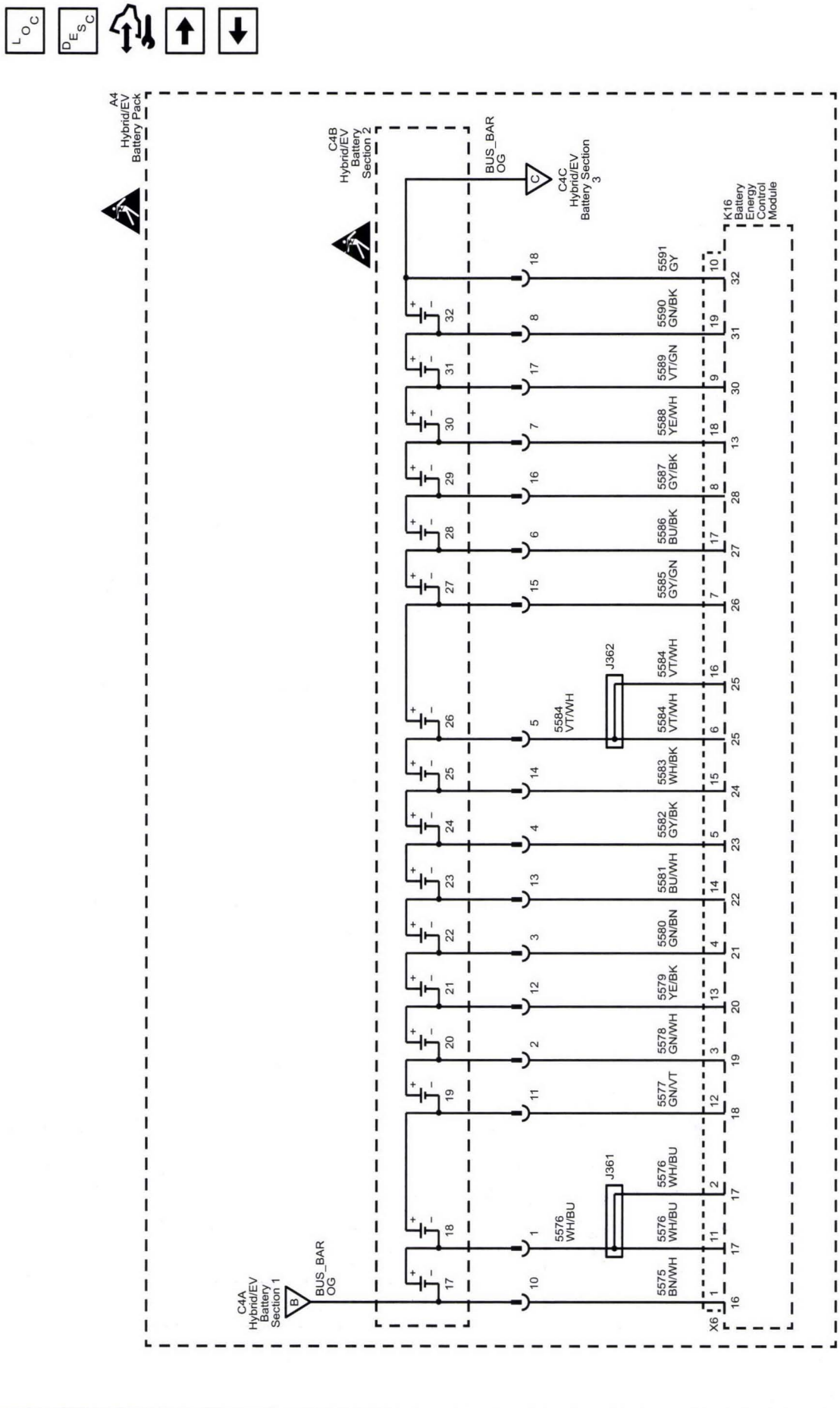

3666215

Hybrid/EV Energy Storage Schematics (Hybrid/EV Battery Section 3)

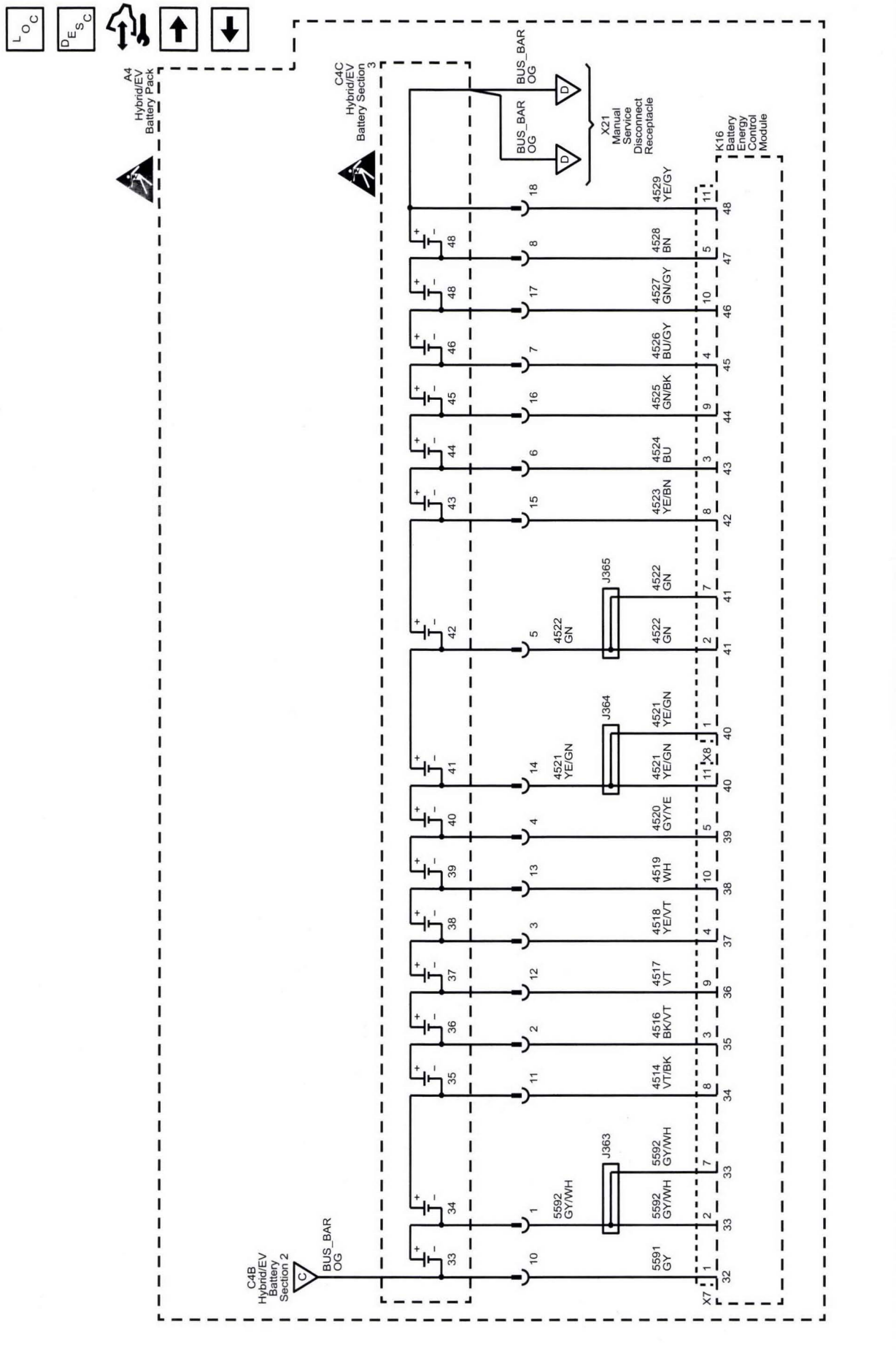

3666216

Hybrid/EV Energy Storage Schematics (Hybrid/EV Battery Section 4)

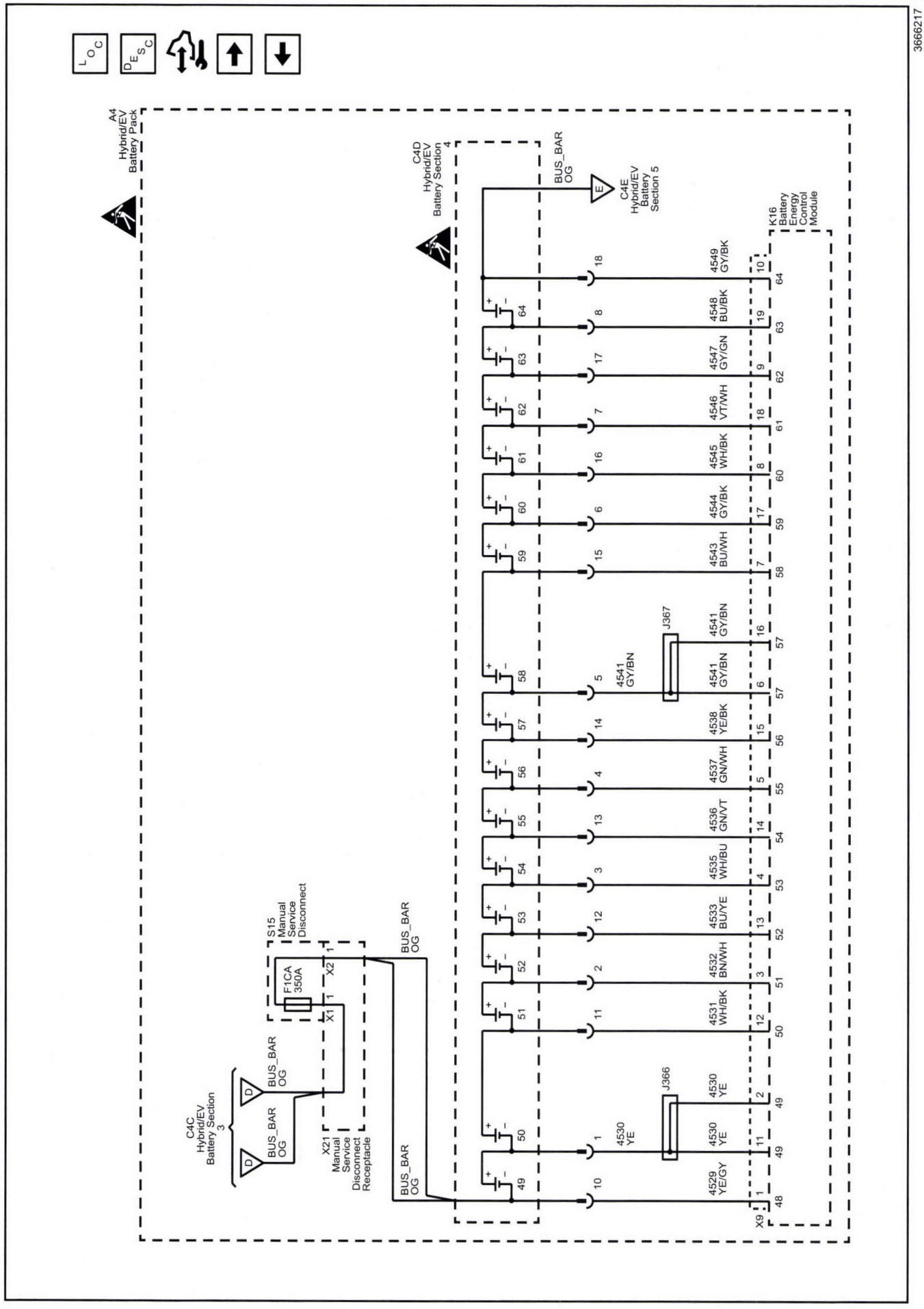

Hybrid/EV Energy Storage Schematics (Hybrid/EV Battery Section 5)

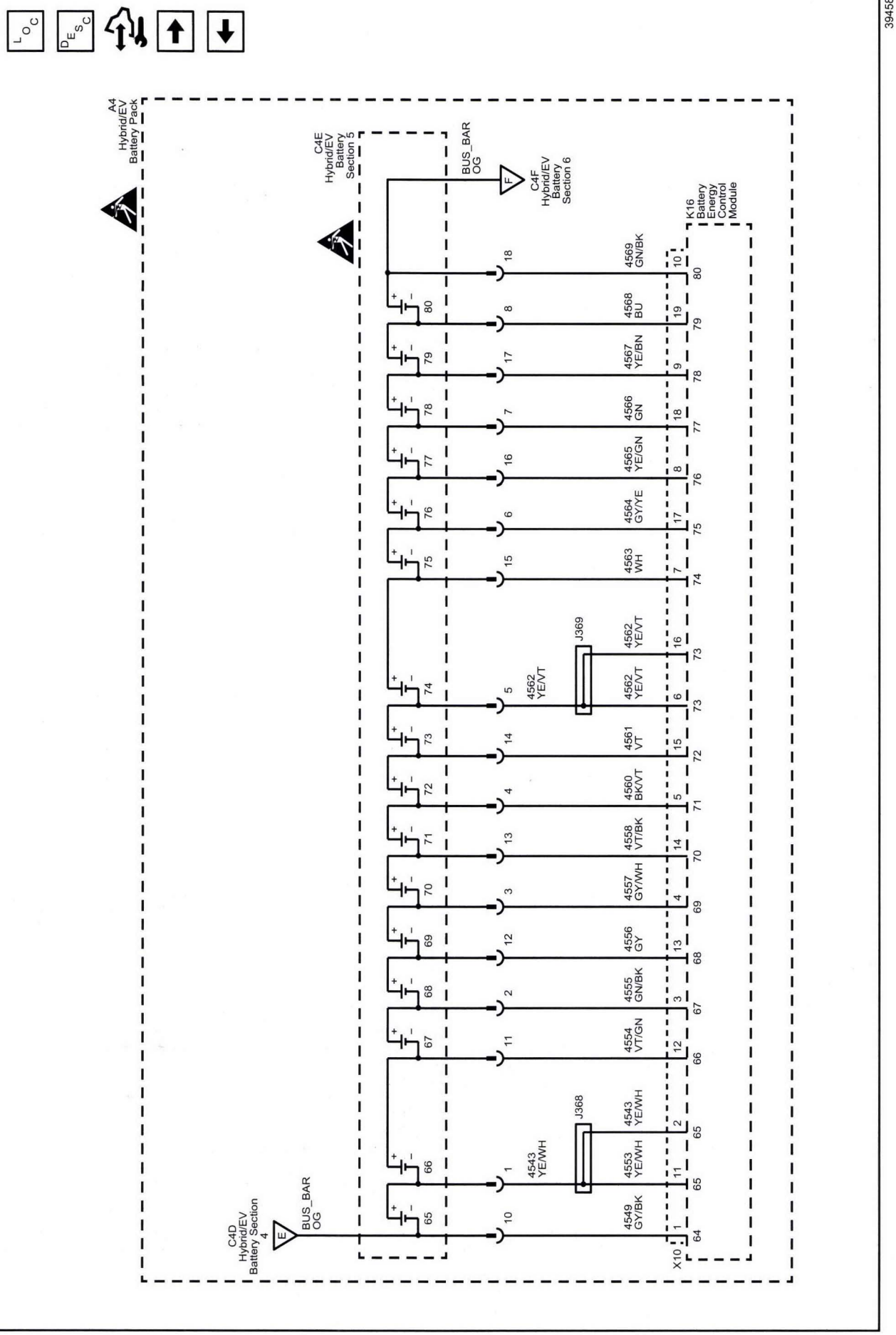

Hybrid/EV Energy Storage Schematics (Hybrid/EV Battery Section 6)

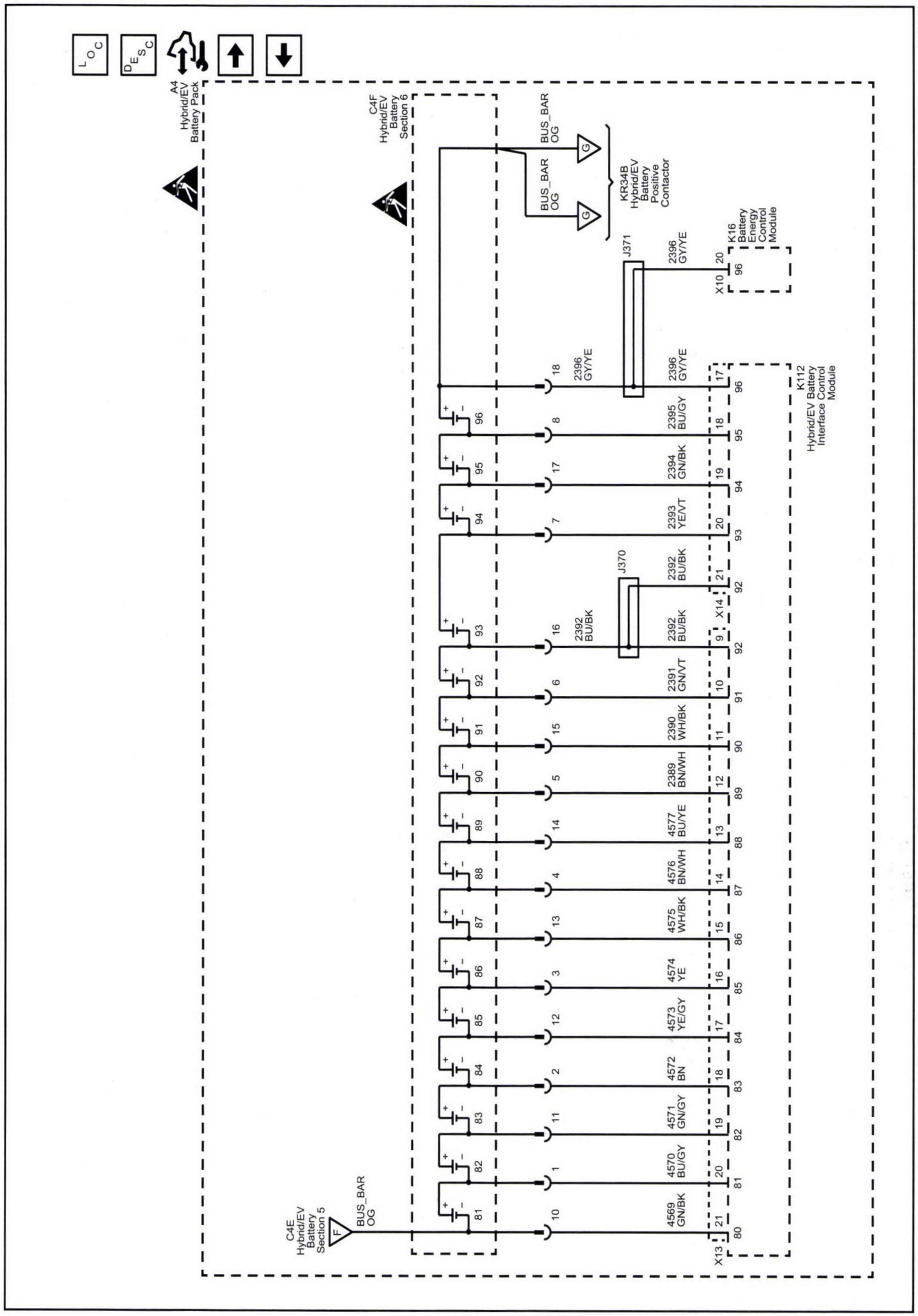

Hybrid/EV Energy Storage Schematics (High Voltage Contactors - High Voltage Positive)

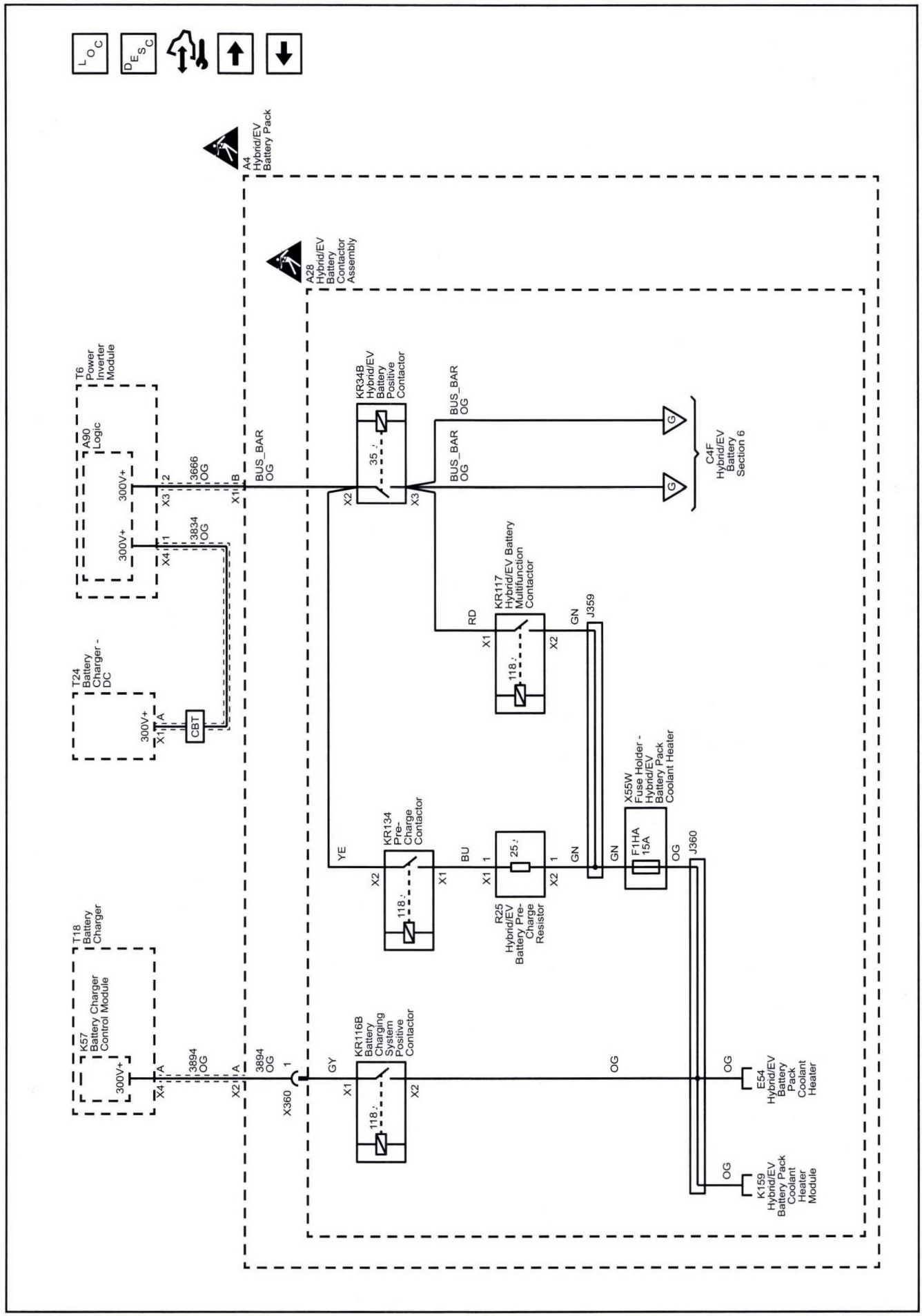

Hybrid/EV Energy Storage Schematics (High Voltage Contactors - High Voltage Negative)

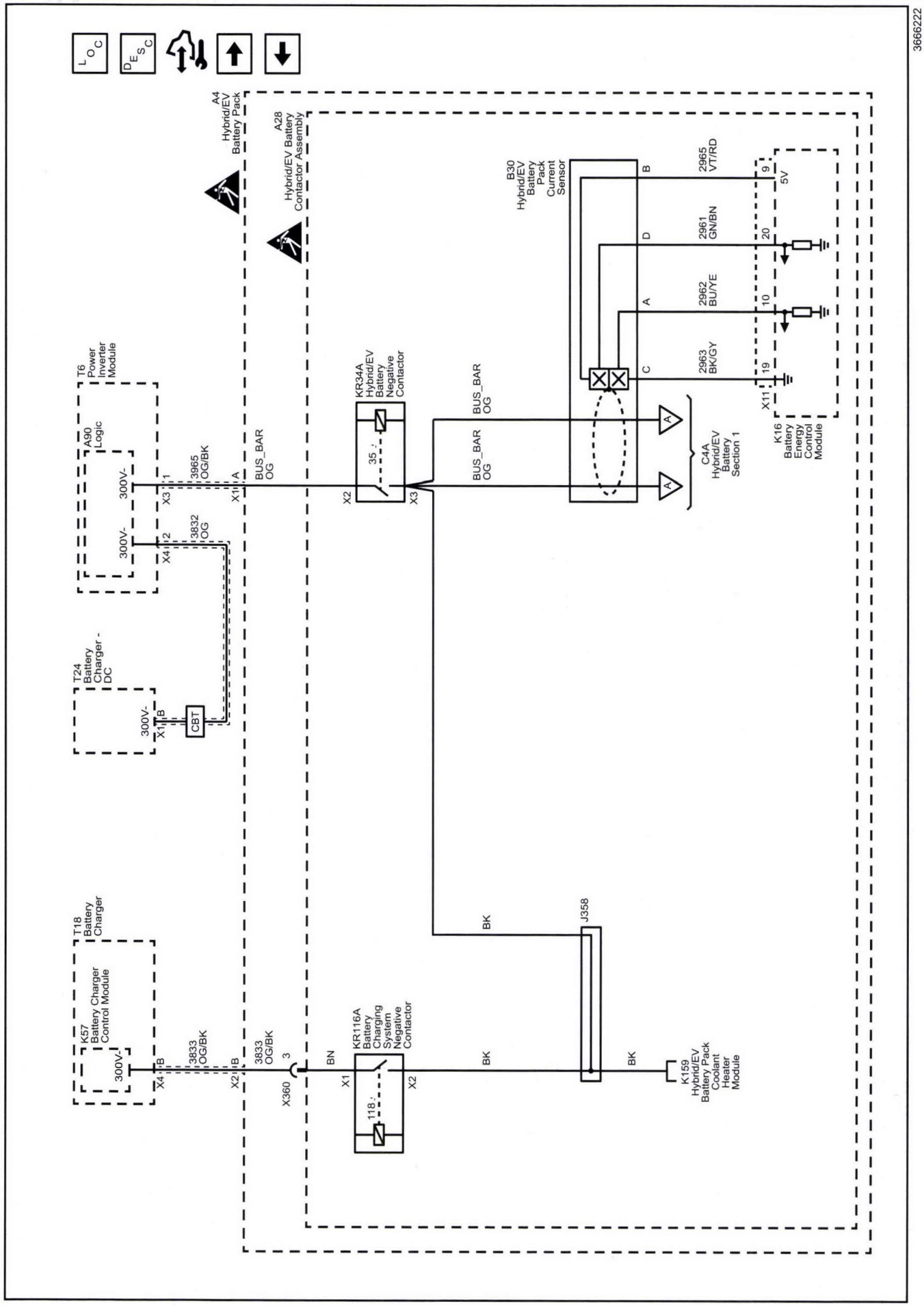

Hybrid/EV Energy Storage Schematics (High Voltage Contactors - Control)

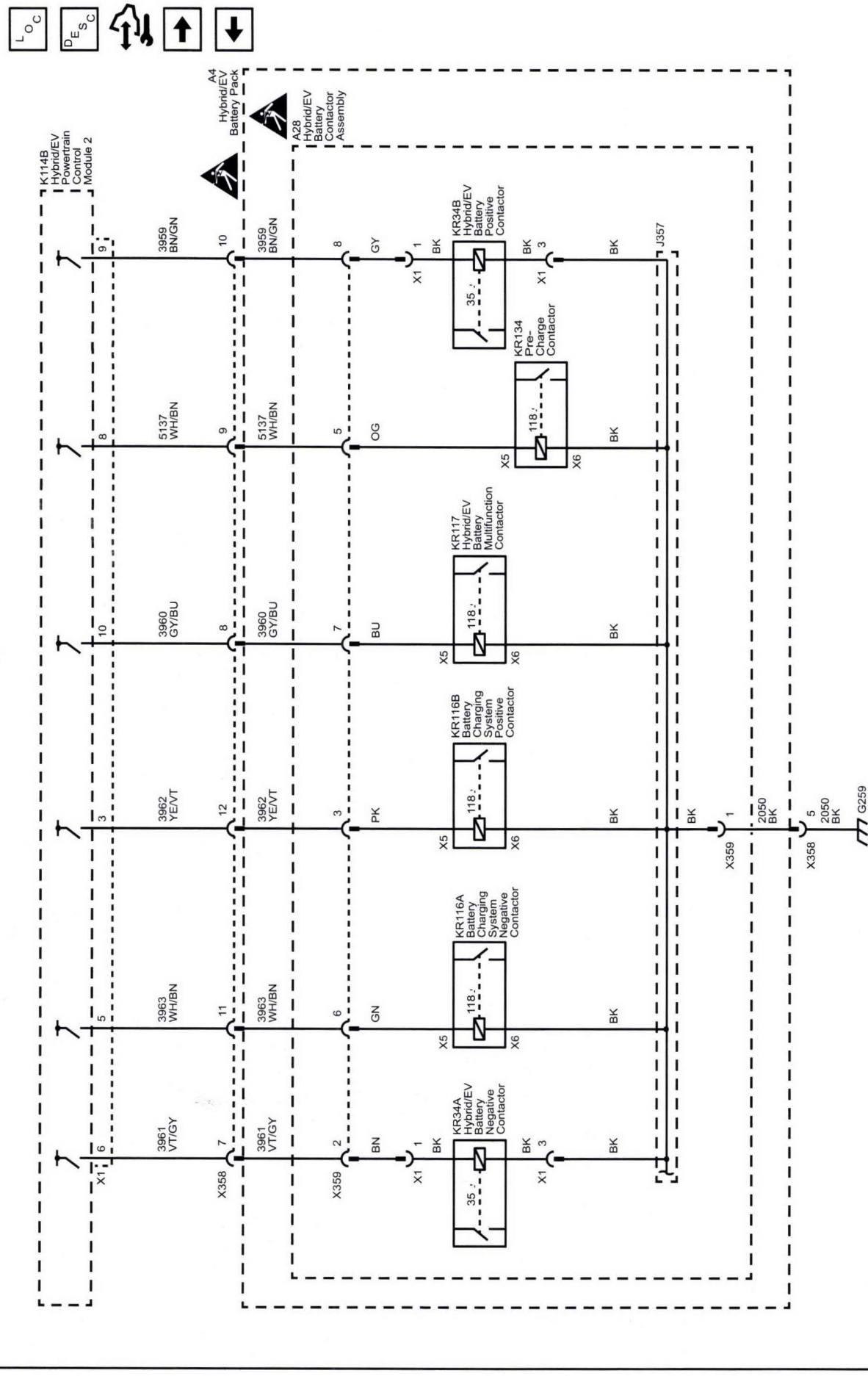

Hybrid/EV Energy Storage Schematics (High Voltage Cable Connections (Except CBT))

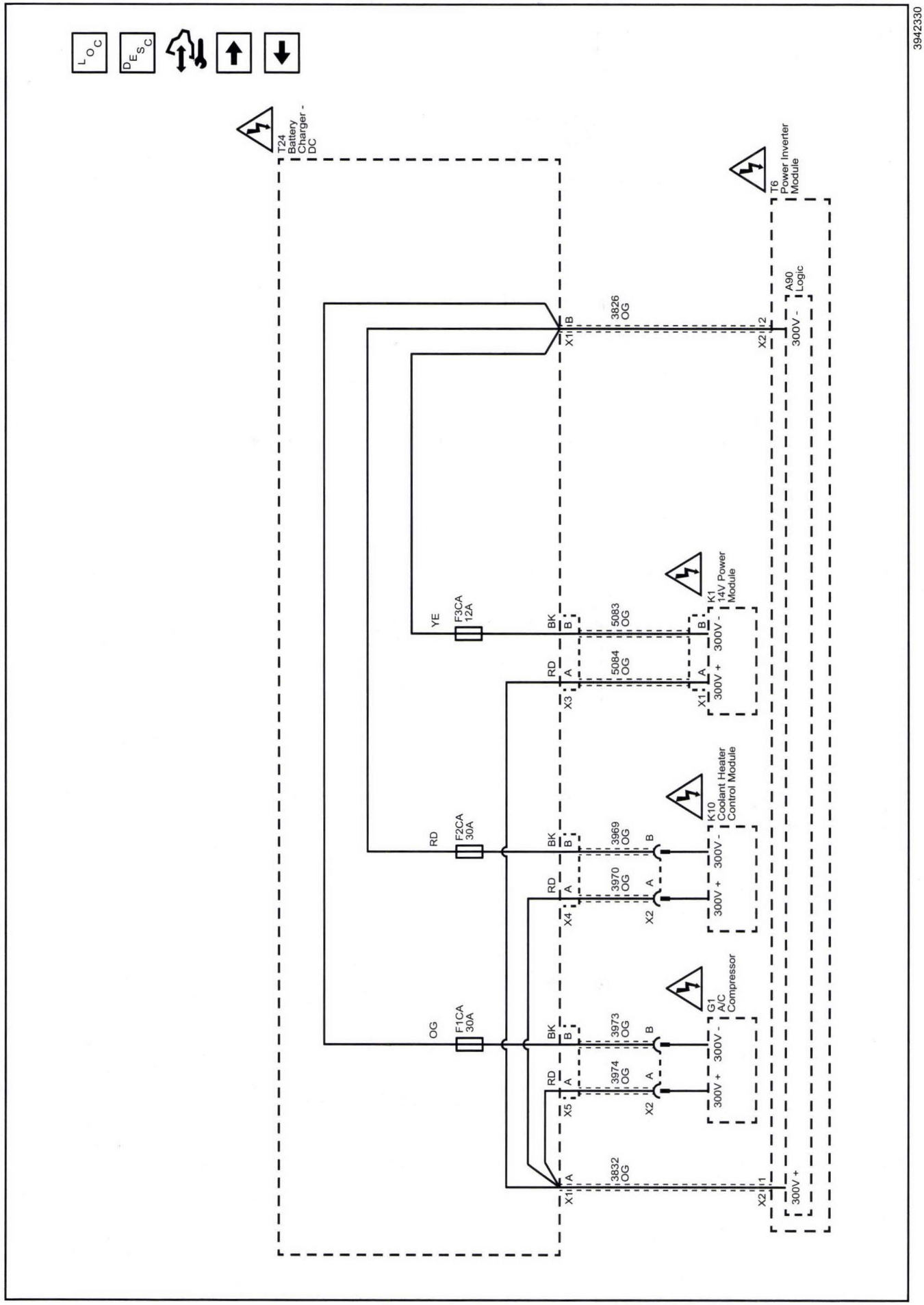

Hybrid/EV Energy Storage Schematics (High Voltage Cable Connections (CBT))

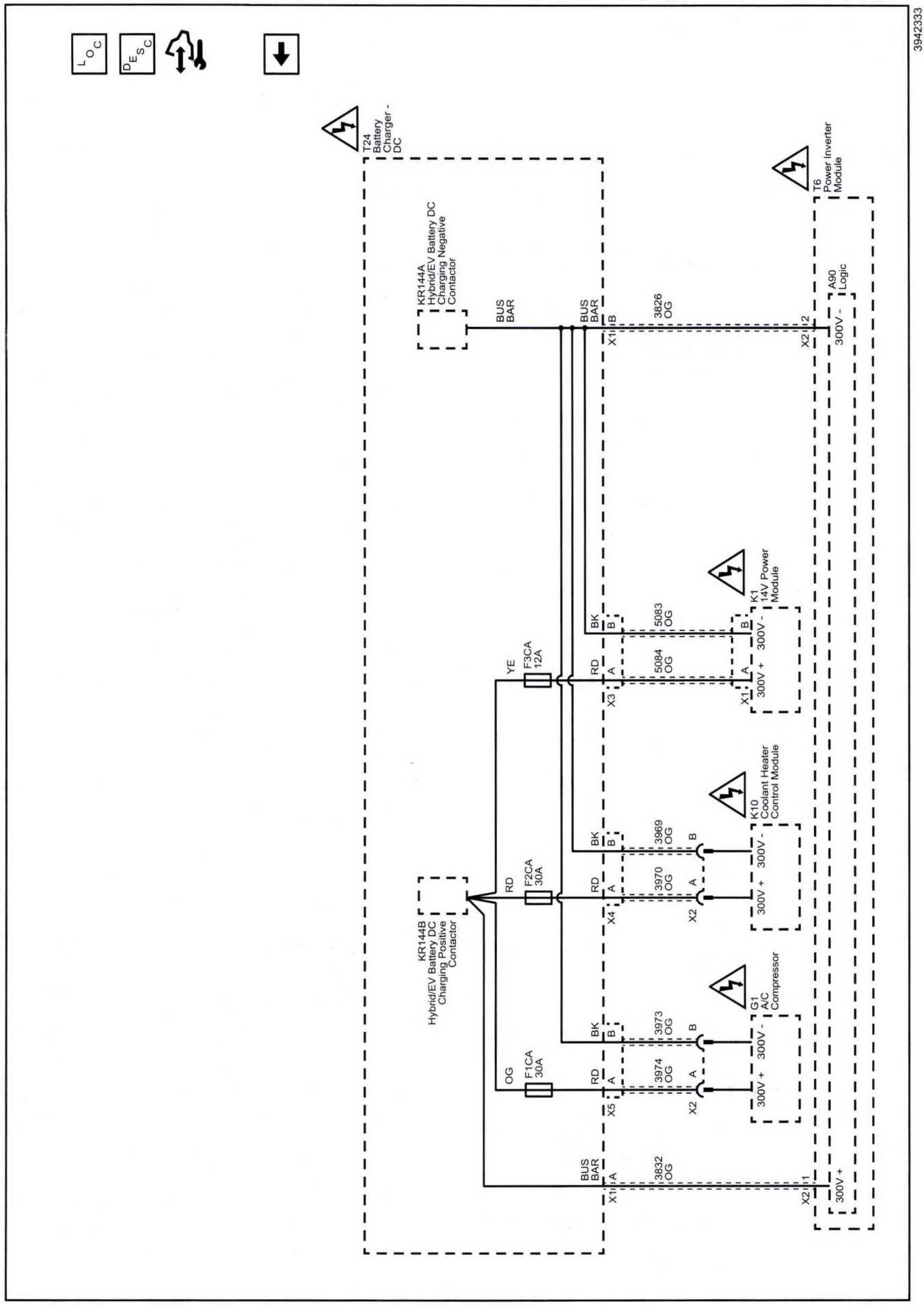

Diagnostic Information and Procedures

High Voltage Safety

Diagnostic Instructions

- Perform the *Diagnostic System Check - Vehicle on page 6-91* prior to using this diagnostic procedure.
- Review *Strategy Based Diagnosis on page 6-83* for an overview of the diagnostic approach.
- *Diagnostic Procedure Instructions on page 6-84* provides an overview of each diagnostic category.

Circuit/System Description

The High Voltage Safety procedure will perform the following tasks:

- Identify precautions when performing service or inspections.
- Identify labels for components, wire harness, and connectors.
- Identify high voltage insulation glove inspection procedure.

Reference Information

Schematic Reference

Hybrid/EV Energy Storage Schematics on page 9-348

Connector End View Reference

Component Connector End Views on page 11-455

Description and Operation

Drive Motor Battery System Description on page 9-545

Electrical Information Reference

- *Circuit Testing on page 11-871*
- *Connector Repairs on page 11-895*
- *Testing for Intermittent Conditions and Poor Connections on page 11-877*
- *Wiring Repairs on page 11-883*

DTC Type Reference

Powertrain Diagnostic Trouble Code (DTC) Type Definitions on page 6-92

Scan Tool Reference

Control Module References on page 6-3 for scan tool information

Circuit/System Testing

Danger: Always perform the High Voltage Disabling procedure prior to servicing any High Voltage component or connection. Personal Protection Equipment (PPE) and proper procedures must be followed.

The High Voltage Disabling procedure includes the following steps:

- ***Identify how to disable high voltage.***
- ***Identify how to test for the presence of high voltage.***
- ***Identify condition under which high voltage is always present and personal protection equipment (PPE) and proper procedures must be followed.***

Before working on any high voltage system, be sure to wear the following Personal Protection Equipment:

- ***Safety glasses with appropriate side shields when within 15 meters (50 feet) of the vehicle, either indoors or outdoors.***
- ***Certified and up-to-date Class "0" Insulation gloves rated at 1000V with leather protectors.***
  - ***Visually and functionally inspect the gloves before use.***
  - ***Wear the Insulation gloves with leather protectors at all times when working with the high voltage battery assembly, whether the system is energized or not.***

Failure to follow the procedures may result in serious injury or death.

Danger: High voltage circuits should only be tested using a digital multimeter (DMM) and test leads with at least a CAT III rating, such as the J 39200-A Digital Multimeter. Failure to follow the procedures may result in serious injury or death.

Danger: This vehicle is equipped with a high voltage battery that is completely isolated from the chassis ground. Never utilize AC powered test equipment to probe the high voltage system. Serious injury, death and component damage could occur if the high voltage system is grounded through the electric utility.

Failure to follow the procedure exactly as written may result in serious injury or death.

Precautions when Performing Service or Inspections

- Always verify that the high voltage has been disabled before working on or around high voltage components, wires, cables, or harnesses.
- Remove all metal objects such as rings and watches.
- The *EL-48900* HEV safety kit contains safety cones. Place the safety cones around the vehicle to alert other technicians that you are working on the high voltage system.
- Remove all keyless entry transmitters and the manual service disconnect from the vehicle and secure in a place outside the vehicle.
- Always wear certified and tested high voltage insulation gloves when inspecting or testing any high voltage wires and components.
- Use the "One Hand" rule:
  - Work with only one hand whenever possible.
  - Keep the other hand behind your back.
- DO NOT carry any metal objects such as a mechanical pencil or a measuring tape that could fall and cause a short circuit.

- After removing any high voltage wires, protect and insulate the terminal ends immediately with UL® Listed or equivalent insulation tape rated at a minimum of 600 V.
- Always tighten the high voltage terminal fasteners to the specified torque. Insufficient or excessive torque will cause malfunctions or damage.
- After finishing work on the high voltage systems and before reinstalling the high voltage manual disconnect, inspect for the following:
  - Verify high voltage system integrity and that all connectors are installed.
  - Verify that all tools or loose components have been removed.

Labels for Components, Wire Harness, and Connectors

The wire harnesses and cables for high voltage circuits are encased in an orange colored covering. In addition, high voltage components such as the Energy Storage System and high voltage cables are affixed with "High Voltage" red danger and orange warning labels.

High Voltage insulation Glove Inspection Procedure

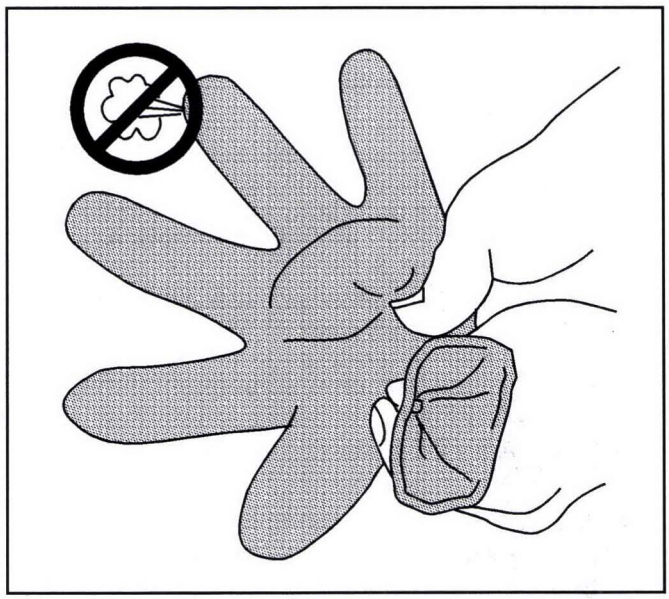

1869643

The following procedure visually and functionally inspects the insulation gloves to be used while performing service on high voltage systems. This inspection procedure should be performed prior to any procedure that requires the use of class "0" insulation gloves rated at 1000 V.

1. Remove glove from leather protector.
2. Inflate glove and seal opening. Pinch the opening closed tightly to prevent any air loss.
3. Press glove to increase pressure.
4. Inspect for the following conditions:
   - Pin holes
   - Air leaks
   - Wear, tears, or abrasions
   - Damp or wet material
   - Certified up-to-date

⇒ **If any of the above conditions are met**

Do not use the gloves. Replace the gloves and return to step 1.

⇓ **If none of the above conditions are met**

5. The gloves are OK to use.

High Voltage Disabling

Diagnostic Instructions

- Perform the *Diagnostic System Check - Vehicle on page 6-91* prior to using this diagnostic procedure.
- Review *Strategy Based Diagnosis on page 6-83* for an overview of the diagnostic approach.
- *Diagnostic Procedure Instructions on page 6-84* provides an overview of each diagnostic category.

Circuit/System Description

The High Voltage Disabling procedure will perform the following tasks:

- Identify how to disable high voltage.
- Identify how to test for the presence of high voltage.
- Identify condition under which high voltage is always present and personal protection equipment (PPE) and proper procedures must be followed.

Reference Information

Schematic Reference

Hybrid/EV Energy Storage Schematics on page 9-348

Connector End View Reference

Component Connector End Views on page 11-455

Description and Operation

Drive Motor Battery System Description on page 9-545

Electrical Information Reference

- *Circuit Testing on page 11-871*
- *Connector Repairs on page 11-895*
- *Testing for Intermittent Conditions and Poor Connections on page 11-877*
- *Wiring Repairs on page 11-883*

DTC Type Reference

Powertrain Diagnostic Trouble Code (DTC) Type Definitions on page 6-92

Scan Tool Reference

Control Module References on page 6-3 for scan tool information

Special Tools

EL-48900 HEV Safety Kit

For equivalent regional tools, refer to *Special Tools on page 9-549*.

Circuit/System Testing

Danger: Ensure all High Voltage safety procedures are followed. Failure to follow the procedure exactly as written may result in serious injury or death.

Danger: Before working on any high voltage system, be sure to wear the following Personal Protection Equipment:

- ***Safety glasses with appropriate side shields when within 50 feet of the vehicle, either indoors or outdoors***
- ***Certified and up-to-date Class "0" Insulation gloves rated at 1000V with leather protectors***
  - ***Visually and functionally inspect the gloves before use.***
  - ***Wear the Insulation gloves at all times when working with the high voltage battery assembly, whether the system is energized or not.***

Failure to follow the procedure exactly as written may result in serious injury or death.

Servicing the A4 Hybrid/EV Battery Pack, Hybrid/EV High Voltage Components, High Voltage DC Cables and General Vehicle Servicing

Note: The Battery Pack will utilize an exchange program. Please consult the most recent revision of bulletin/PI #PIP5112, available in Service Information (SI), for a list of approved Battery Pack service procedures. Components that may be removed and serviced without exchanging the complete battery pack are identified in the bulletin/PI. Please contact the GM Technical Assistance Center if you have any questions.

1. Review the high voltage safety information. Refer to *High Voltage Safety on page 9-362*
2. Disconnect and remove all 12 V battery chargers and the High Voltage Charge Cable from the X98 Hybrid Battery Charger Receptacle.
3. Remove all keyless entry transmitters from the vehicle and secure in a place outside the vehicle.
4. Attempt to start the vehicle with the Ignition Mode Switch.

⇒ **If the vehicle enters Propulsion System Active mode**

Locate and remove all keyless entry transmitters from within the vehicle and return to step 3.

⇓ **If the vehicle does not enter Propulsion System Active mode**

Note: The 12 V battery must be disconnected to ensure proper test results.

5. Disconnect the 12 V battery. Refer to *Battery Negative Cable Disconnection and Connection on page 9-20*

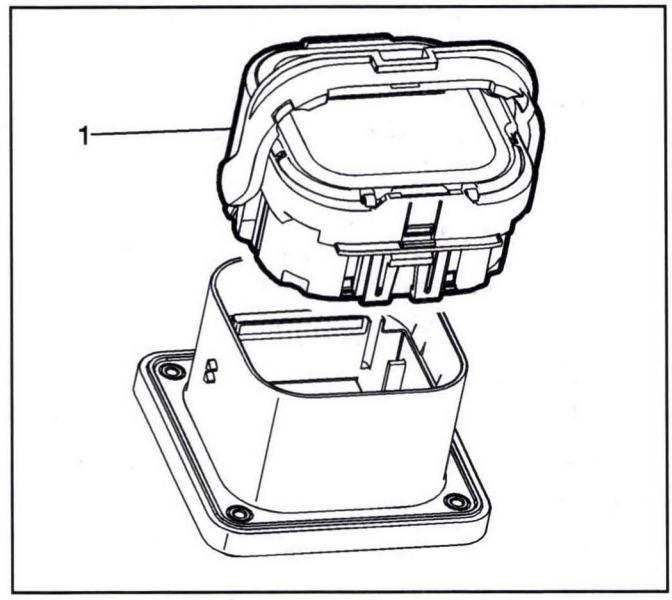

3254698

Note: The S15 Manual Service Disconnect is located under the rear seat.

6. Remove the S15 Manual Service Disconnect. Place the S15 Manual Service Disconnect in a secure place outside the vehicle.

   Note: 5 min must elapse before removing any high voltage connectors. Removal of non high voltage components is allowed during this wait time.

7. Wait 5 min before continuing, to allow the high voltage capacitors to discharge. Raise the vehicle and remove the underbody front air deflector. Refer to *Underbody Front Air Deflector Replacement (Center) on page 3-126*
8. Remove the front underbody rear air deflector. Refer to *Underbody Rear Air Rear Deflector Replacement (Rear) on page 3-129* or *Underbody Rear Air Rear Deflector Replacement (Front) on page 3-130* Front.

   Note: A 9 V DC battery can be used to test the DMM.

9. Test the DMM by measuring a 12 V battery.

⇒ **If the DMM does not properly measure a 12 V battery**

Repair or replace the DMM and repeat all voltage measurements and continue to the next step.

⇓ **If the DMM does properly measure a 12 V battery**

Note:

- Wear your High Voltage Insulation gloves until you have determined that a high voltage exposure risk is no longer present.
- Replace any 300 V battery cable with a connector seal that is deformed, missing, or damaged.

10. Disconnect the X1 harness connector at the A4 Hybrid Battery Pack.

Note: If the test result is greater than 3 V, leave the DMM connected to the terminals until the voltage drops below 3 V to allow the high voltage capacitors to discharge.

11. Verify that the voltage has been disabled at the harness connector at the A4 Hybrid Battery Pack. Using the DMM, verify the voltage measures less than 3 V at the following points;
    - High voltage DC negative terminal B to vehicle chassis ground.
    - High voltage DC positive terminal A to vehicle chassis ground.
    - High voltage DC positive terminal A and high voltage DC negative terminal B.

⇒ **If 3 V or greater**

Leave the DMM connected to the terminals until the voltage drops below 3 V to allow the high voltage capacitors to discharge. Continue to the next step once the voltage is below 3 V.

⇓ **If less than 3 V**

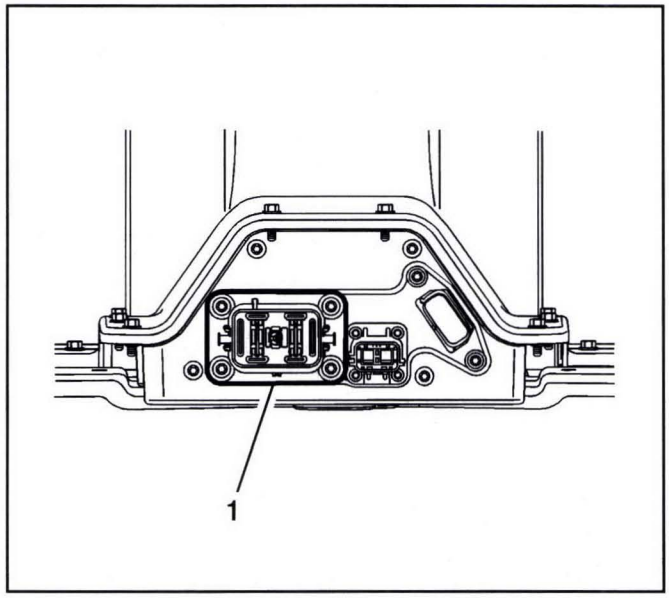

3254704

12. Verify that the voltage has been disabled at the A4 Hybrid Battery Pack (1). Using the DMM, verify the voltage measures less than 3 V at the following points;
    - High voltage DC negative terminal B to vehicle chassis ground.
    - High voltage DC positive terminal A to vehicle chassis ground.
    - High voltage DC positive terminal A and high voltage DC negative terminal B.

⇒ **If 3 V or greater**

There is a stuck closed contactor and a loss of isolation within the A4 Battery Pack Assembly. Refer to *Hybrid/EV Battery Voltage Present on page 9-437*

⇓ **If less than 3 V**

13. Disconnect the X2 harness connector at the A4 Hybrid Battery Pack.

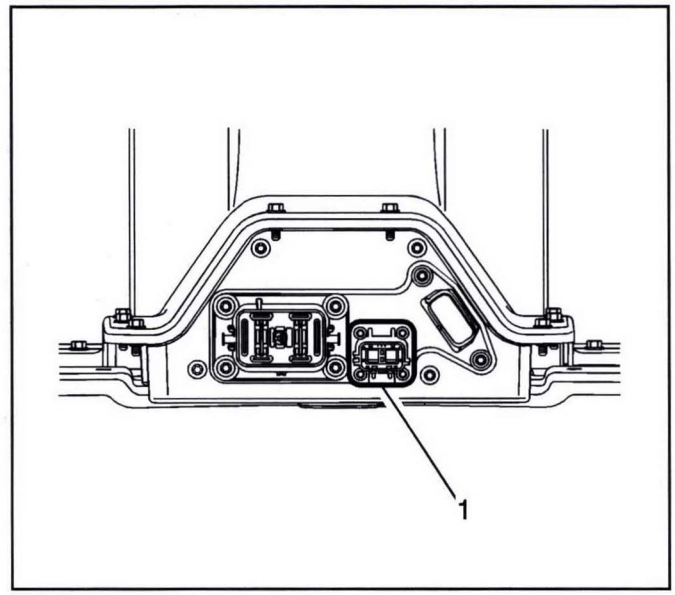

3254712

14. Verify that the voltage has been disabled at the A4 Hybrid Battery Pack (1). Using the DMM, verify the voltage measures less than 3 V at the following points;
    - High voltage DC negative terminal B to vehicle chassis ground.
    - High voltage DC positive terminal A to vehicle chassis ground.
    - High voltage DC positive terminal A and high voltage DC negative terminal B.

⇒ **If 3 V or greater**

There is a stuck closed contactor and a loss of isolation within the A4 Battery Pack Assembly. Refer to *Hybrid/EV Battery Voltage Present on page 9-437*

⇓ **If less than 3 V**

15. Lower vehicle, remove the high voltage disconnect circuit connector cover. Refer to *High Voltage Disconnect Circuit Connector Cover Replacement on page 9-174*

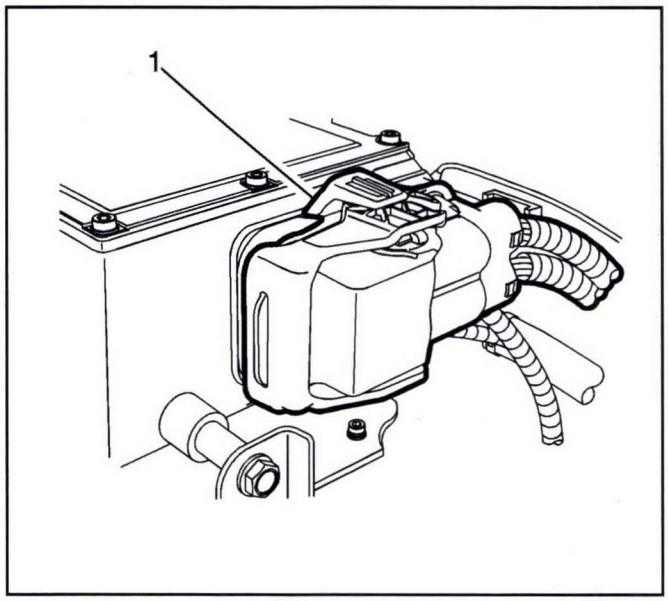

3254720

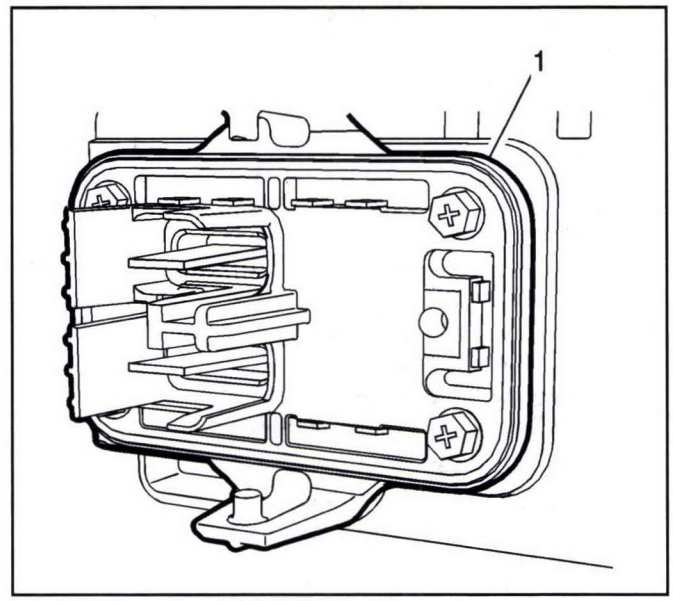

3254724

16. Disconnect the X1 harness connector (1) at the T24 Battery Charger – DC.

    Note: If the test result is greater than 3 V, leave the DMM connected to the terminals until the voltage drops below 3 V to allow the high voltage capacitors to discharge.

17. Verify that the voltage has been disabled at the harness connector at the T24 Battery Charger – DC. Using the DMM, verify the voltage measures less than 3 V at the following points;
    - High voltage DC negative terminal B to vehicle chassis ground.
    - High voltage DC positive terminal A to vehicle chassis ground.
    - High voltage DC positive terminal A and high voltage DC negative terminal B.

    ⇒ **If 3 V or greater**

    Leave the DMM connected to the terminals until the voltage drops below 3 V to allow the high voltage capacitors to discharge. Continue to the next step once the voltage is below 3 V.

    ⇓ **If less than 3 V**

18. Verify that the voltage has been disabled at the T24 Battery Charger – DC (1). Using the DMM, verify the voltage measures less than 3 V at the following points:
    - High voltage DC negative terminal B to vehicle chassis ground.
    - High voltage DC positive terminal A to vehicle chassis ground.
    - High voltage DC positive terminal A and high voltage DC negative terminal B.

    ⇒ **If 3 V or greater**

    Leave the DMM connected to the terminals until the voltage drops below 3 V to allow the high voltage capacitors to discharge. Continue to the next step once the voltage is below 3 V.

    ⇓ **If less than 3 V**

    Note: A 9 V DC battery can be used to test the DMM.

19. Test the DMM by measuring a 12 V battery.

    ⇒ **If the DMM does not properly measure a 12 V battery**

    Repair or replace the DMM and repeat all voltage measurements.

    ⇓ **If the DMM does properly measure a 12 V battery**

20. The A4 Hybrid/EV Battery Pack, Hybrid/EV High Voltage Components, High Voltage DC Cables and General Vehicle can now be serviced.

High Voltage Enabling

Diagnostic Instructions

- Perform the *Diagnostic System Check - Vehicle on page 6-91* prior to using this diagnostic procedure.
- Review *Strategy Based Diagnosis on page 6-83* for an overview of the diagnostic approach.
- *Diagnostic Procedure Instructions on page 6-84* provides an overview of each diagnostic category.

Circuit/System Description

The High Voltage Enabling procedure will perform the following tasks:

- Identify how to enable high voltage.
- Verify high voltage system integrity and that all connectors are installed.

Reference Information

Schematic Reference

Hybrid/EV Energy Storage Schematics on page 9-348

Connector End View Reference

Component Connector End Views on page 11-455

Description and Operation

Drive Motor Battery System Description on page 9-545

Electrical Information Reference

- *Circuit Testing on page 11-871*
- *Connector Repairs on page 11-895*
- *Testing for Intermittent Conditions and Poor Connections on page 11-877*
- *Wiring Repairs on page 11-883*

DTC Type Reference

Powertrain Diagnostic Trouble Code (DTC) Type Definitions on page 6-92

Scan Tool Reference

Control Module References on page 6-3 for scan tool information

Circuit/System Testing

Danger: Ensure all High Voltage safety procedures are followed. Failure to follow the procedure exactly as written may result in serious injury or death.

Danger: Before working on any high voltage system, be sure to wear the following Personal Protection Equipment:

- ***Safety glasses with appropriate side shields when within 50 feet of the vehicle, either indoors or outdoors***
- ***Certified and up-to-date Class "0" Insulation gloves rated at 1000V with leather protectors***
  - ***Visually and functionally inspect the gloves before use.***
  - ***Wear the Insulation gloves at all times when working with the high voltage battery assembly, whether the system is energized or not.***

Failure to follow the procedure exactly as written may result in serious injury or death.

1. Review the high voltage safety information prior to performing the High Voltage Enabling procedure. Refer to *High Voltage Safety on page 9-362*.
2. Ensure that the 12 V battery is disconnected.

   Note:

   - Always tighten the high voltage fasteners to the specified torque. Insufficient or excessive torque will cause malfunctions or damage.
   - Inspect any disconnected Battery Positive and Negative cable seals for being deformed, missing, or damaged. Replace any seals that are deformed, missing, or damaged.
   - The high voltage connectors do not require a specific sequence when reconnecting.
3. After finishing work on the high voltage systems and before reinstalling the S15 Manual Service Disconnect, inspect for the following:
   - Verify that all tools or loose components have been removed.
   - Verify high voltage system integrity and that all connectors are installed.
   - Install any components or connectors that have been removed or replaced during diagnosis.

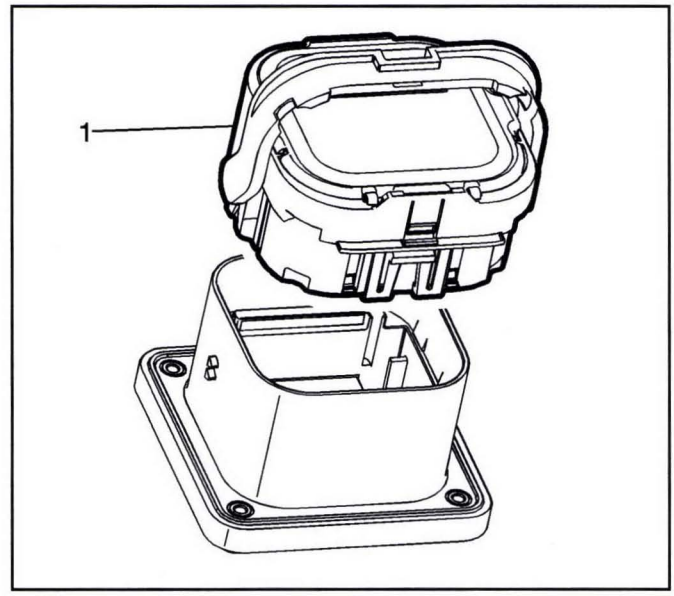

3254698

4. Install the S15 Manual Service Disconnect.
5. Connect the 12 V battery. Refer to *Battery Negative Cable Disconnection and Connection on page 9-20*.
6. Vehicle in Service Mode.
7. If the A4 hybrid/EV battery pack, K16 battery energy control module, or any of the hybrid/EV battery interface control modules have been replaced, program the K16 battery energy control module and the hybrid/EV battery interface control modules. Refer to *Battery Energy Control Module Programming and Setup on page 6-6*

8. Vehicle OFF and all vehicle systems OFF. It may take up to 2 min for all vehicle systems to power down.
9. Vehicle in Service Mode.
10. Verify with a scan tool no DTCs are set.

⇒ **If DTCs are set**

Refer to *Diagnostic Trouble Code (DTC) List - Vehicle on page 6-92*

⇓ **No DTCs are set**

11. Vehicle ON for 2 min.
12. Vehicle OFF and wait 5 min.
13. Vehicle in Service Mode.
14. Verify with the scan tool the T6 traction power inverter module and K114B hybrid/EV powertrain control module 2 DTC Information that the following DTCs have Ran Since Code Clear and have not set:
    - Motor position sensor learn DTCs, P0C17 and P0C18.
    - Contactor DTCs, P0AD9, P0ADD, P0D0A, P0D11, P0AE4, and P1EBC.
    - Discharge and Pre-charge DTCs, P0C76, P0C77, P0C78 and P0AFB.
    - High voltage loss of isolation DTCs, P0AA6, P1AE6 and P1F0E.

⇒ **If any of the DTCs are set**

Refer to *Diagnostic Trouble Code (DTC) List - Vehicle on page 6-92*

⇒ **If any of the DTCs have Not Ran Since Code Clear**

Review and operate the vehicle according to the applicable DTC Conditions for Running and ensure the DTCs run and pass.

⇓ **If the DTCs have Ran and Passed**

15. Test drive the vehicle and verify no DTCs are set.

EL-48571 High Voltage Battery Pin Out Box Reference

Battery Section 1		
Selector Switch Position	**Switch Number**	**Cells 1–16**
A	1	1
	2	2
	3	3
	4	4
	5	5
	6	6
B	7	7
	8	8
	9	9
	10	10
	11	11
	12	12
C	13	13
	14	14
	15	15
	16	16
	17	NC
	18	NC
D	19	NC
	20	NC
	21	NC
	22	NC
	23	NC
	24	NC

EL-48571 High Voltage Battery Pin Out Box Reference

Battery Section 2		
Selector Switch Position	**Switch Number**	**Cells 17–32**
A	1	17
	2	18
	3	19
	4	20
	5	21
	6	22
B	7	23
	8	24
	9	25
	10	26
	11	27
	12	28
C	13	29
	14	30
	15	31
	16	32
	17	NC
	18	NC
D	19	NC
	20	NC
	21	NC
	22	NC
	23	NC
	24	NC

EL-48571 High Voltage Battery Pin Out Box Reference

Battery Section 3		
Selector Switch Position	**Switch Number**	**Cells 33–48**
A	1	33
	2	34
	3	35
	4	36
	5	37
	6	38
B	7	39
	8	40
	9	41
	10	42
	11	43
	12	44

EL-48571 High Voltage Battery Pin Out Box Reference (cont'd)

Battery Section 3		
Selector Switch Position	**Switch Number**	**Cells 33–48**
C	13	45
	14	46
	15	47
	16	48
	17	NC
	18	NC
D	19	NC
	20	NC
	21	NC
	22	NC
	23	NC
	24	NC

EL-48571 High Voltage Battery Pin Out Box Reference

Battery Section 4		
Selector Switch Position	**Switch Number**	**Cells 49–64**
A	1	49
	2	50
	3	51
	4	52
	5	53
	6	54
B	7	55
	8	56
	9	57
	10	58
	11	59
	12	60
C	13	61
	14	62
	15	63
	16	64
	17	NC
	18	NC
D	19	NC
	20	NC
	21	NC
	22	NC
	23	NC
	24	NC

EL-48571 High Voltage Battery Pin Out Box Reference

Battery Section 5		
Selector Switch Position	**Switch Number**	**Cells 65–80**
A	1	65
	2	66
	3	67
	4	68
	5	69
	6	70
B	7	71
	8	72
	9	73
	10	74
	11	75
	12	76
C	13	77
	14	78
	15	79
	16	80
	17	NC
	18	NC
D	19	NC
	20	NC
	21	NC
	22	NC
	23	NC
	24	NC

EL-48571 High Voltage Battery Pin Out Box Reference

Battery Section 6		
Selector Switch Position	**Switch Number**	**Cells 81–96**
A	1	81
	2	82
	3	83
	4	84
	5	85
	6	86
B	7	87
	8	88
	9	89
	10	90
	11	91
	12	92

EL-48571 High Voltage Battery Pin Out Box Reference (cont'd)

Battery Section 6		
Selector Switch Position	**Switch Number**	**Cells 81–96**
C	13	93
	14	94
	15	95
	16	96
	17	NC
	18	NC
D	19	NC
	20	NC
	21	NC
	22	NC
	23	NC
	24	NC

DTC P0A0C or P0A0D

Diagnostic Instructions

- Perform the *Diagnostic System Check - Vehicle on page 6-91* prior to using this diagnostic procedure.
- Review *Strategy Based Diagnosis on page 6-83* for an overview of the diagnostic approach.
- *Diagnostic Procedure Instructions on page 6-84* provides an overview of each diagnostic category.

DTC Descriptors

DTC P0A0C: High Voltage System Interlock Circuit Low Voltage

DTC P0A0D: High Voltage System Interlock Circuit High Voltage

Circuit/System Description

The high voltage interlock circuit is used to determine if access to high voltage components or connectors is being attempted. The opening of these high voltage components causes the high voltage interlock circuit to open. The hybrid/EV powertrain control module 2 sources about 5 V on the high voltage interlock circuit loop. When the hybrid/EV powertrain control module 2 detects a loss of high voltage interlock circuit current, the high voltage contactors are commanded open.

The high voltage interlock circuit monitors for integrity of the following components:

- F103 Power Inverter Module Assembly Case Cover
- S15 Manual Service Disconnect
- A4 Hybrid/EV Battery Pack high voltage harness connector X1
- A4 Hybrid/EV Battery Pack high voltage harness connector X2

Conditions for Running the DTC

P0A0C

- The 12 V battery voltage is greater than 10.2 V.
- The hybrid/EV powertrain control module 2 is commanding 5 V on the high voltage interlock circuit.

P0A0D

- The 12 V battery voltage is greater than 10.2 V.
- The hybrid/EV powertrain control module 2 is commanding 0 V on the high voltage interlock signal circuit.

  OR
- The 12 V battery voltage is greater than 10.2 V.
- The hybrid/EV powertrain control module 2 is commanding 5 V on the high voltage interlock signal circuit.

Conditions for Setting the DTC

P0A0C

The hybrid/EV powertrain control module 2 detects high voltage interlock circuit 5 V low reference voltage is less than 30 % of the commanded 5 V signal voltage.

P0A0D

- The hybrid/EV powertrain control module 2 detects high voltage interlock circuit 5 V low reference voltage is greater than 24 % of the commanded 0 V signal voltage.

  OR
- The hybrid/EV powertrain control module 2 detects high voltage interlock circuit 5 V low reference voltage is greater than 44 % of the commanded 5 V signal voltage.

Action Taken When the DTC Sets

- DTCs P0A0C and P0A0D are Type A DTCs.
- The hybrid/EV powertrain control module 2 opens the high voltage contactors when vehicle speed is less than 5 km/h (3 mph).

Conditions for Clearing the DTC

DTCs P0A0C and P0A0D are Type A DTCs.

Diagnostic Aids

- Test for a fully engaged hybrid battery pack high voltage manual disconnect whenever an open or intermittent high voltage interlock circuit condition is observed. The hybrid battery pack high voltage manual disconnect lever must be pressed down fully in order to completely engage the high voltage interlock circuit terminals.
- The A4 Hybrid/EV Battery Pack high voltage connectors X1 and X2, the S15 Manual Service Disconnect and the F103 Power Inverter Module Assembly Case Cover must all be engaged to complete the interlock circuit loop.
- With all monitored high voltage components engaged and the High Voltage Interlock Circuit is Energized, observe the scan tool hybrid/EV powertrain control module 2 High Voltage Interlock Circuit Status parameter for a PASS status. To help identify intermittent conditions, manipulate the monitored components and inline connectors. An open interlock circuit will display a FAIL status.

Reference Information

Schematic Reference

Hybrid/EV Energy Storage Schematics on page 9-348

Connector End View Reference

Component Connector End Views on page 11-455

Description and Operation

Drive Motor Battery System Description on page 9-545

Electrical Information Reference

- *Circuit Testing on page 11-871*
- *Connector Repairs on page 11-895*
- *Testing for Intermittent Conditions and Poor Connections on page 11-877*
- *Wiring Repairs on page 11-883*

DTC Type Reference

Powertrain Diagnostic Trouble Code (DTC) Type Definitions on page 6-92

Scan Tool Reference

Control Module References on page 6-3 for scan tool information

Special Tools

EL-48900 HEV Safety Kit

For equivalent regional tools, refer to *Special Tools on page 9-549*.

Circuit/System Verification

1. Verify all monitored high voltage components and connectors are connected.
2. Vehicle in Service Mode.
3. Observe the hybrid/EV powertrain control module 2 High Voltage Interlock Circuit Status parameter. Verify the parameter indicates a PASS condition.

⇒ **The parameter indicates a FAIL condition**

Refer to Circuit/System Testing.

⇓ **The parameter indicates a PASS condition**

4. All OK.

Circuit/System Testing

Danger: Always perform the High Voltage Disabling procedure prior to servicing any High Voltage component or connection. Personal Protection Equipment (PPE) and proper procedures must be followed.

The High Voltage Disabling procedure includes the following steps:

- ***Identify how to disable high voltage.***
- ***Identify how to test for the presence of high voltage.***
- ***Identify condition under which high voltage is always present and personal protection equipment (PPE) and proper procedures must be followed.***

Before working on any high voltage system, be sure to wear the following Personal Protection Equipment:

- ***Safety glasses with appropriate side shields when within 15 meters (50 feet) of the vehicle, either indoors or outdoors.***
- ***Certified and up-to-date Class "0" Insulation gloves rated at 1000V with leather protectors.***
  - ***Visually and functionally inspect the gloves before use.***
  - ***Wear the Insulation gloves with leather protectors at all times when working with the high voltage battery assembly, whether the system is energized or not.***

Failure to follow the procedures may result in serious injury or death.

Note:

- The Battery Pack will utilize an exchange program. Please consult the most recent revision of bulletin/PI #PIP5112, available in Service Information (SI), for a list of approved Battery Pack service procedures. Components that may be removed and serviced without exchanging the complete battery pack are identified in the bulletin/PI. Please contact the GM Technical Assistance Center if you have any questions.
- An S15 Manual Service Disconnect that is not fully engaged may result in an intermittent DTC PA0C.

1. Vehicle OFF, disconnect the 12 V battery. Remove the S15 Manual Service Disconnect.

   Note: The S15 Manual Service Disconnect contains four interlock circuit terminals but only two terminals are used.

2. Verify that terminal 1 and terminal 2 of the S15 Manual Service Disconnect are not bent or broken and are OK.

⇒ **If not OK**

Replace the S15 Manual Service Disconnect.

⇓ **If OK**

3. Test for less than 10 Ω between terminal 1 and terminal 2 of the S15 Manual Service Disconnect.

⇒ **If 10 Ω or greater**

Replace the S15 Manual Service Disconnect.

⇓ **If less than 10 Ω**

4. With the S15 Manual Service Disconnect removed, disconnect the X1 harness connector at the K114B Hybrid/EV Powertrain Control Module 2.
5. Test for infinite resistance between each of the terminals listed below and ground;
   - Terminal 45
   - Terminal 47

⇒ **If less than infinite resistance**

Repair the short to ground on the appropriate circuit.

⇓ **If infinite resistance**

6. Test for less than 10 Ω between the low reference circuit terminal 45 at the K114B Hybrid/EV Powertrain Control Module 2 and terminal 2 at the X21 Manual Service Disconnect Receptacle.

⇒ **If 10 Ω or greater**

6.1. Disconnect the X358 harness connector at the A4 Hybrid/EV Battery Pack.

6.2. Test for less than 10 Ω between the low reference circuit terminal 45 at the K114B Hybrid/EV Powertrain Control Module 2 and terminal 1 X358 harness connector.

⇒ If 10 Ω or greater, repair the open/high resistance in the circuit.

⇒ If less than 10 Ω, replace the A4 Hybrid/EV Battery Pack internal harness.

⇓ **If less than 10 Ω**

Note: The A4 Hybrid/EV Battery Pack high voltage connectors X1 and X2 must be connected to complete the interlock circuit.

7. Test for 35–45 Ω between the 5 V signal circuit terminal 47 at the K114B Hybrid/EV Powertrain Control Module 2 and terminal 1 at the X21 Manual Service Disconnect Receptacle.

⇒ **If not within the specified range**

7.1. Disconnect the X358 harness connector at the A4 Hybrid /EV Battery Pack.

7.2. Test for less than 10 Ω between the 5 V signal circuit terminal 47 at the K114B Hybrid/EV Powertrain Control Module 2 and terminal 2 X358 harness connector.

⇒ If 10 Ω or greater, repair the open/high resistance in the circuit.

⇓ If less than 10 Ω

7.3. Perform the *High Voltage Disabling on page 9-363* procedure.

7.4. Verify that terminal 1 and terminal 2 of both A4 Hybrid/EV Battery Pack connectors X1 and X2 are not bent or broken and are OK.

⇒ If not OK, replace the applicable high voltage cable.

⇓ If OK

7.5. Test for less than 10 Ω between terminal 1 and terminal 2 of both A4 Hybrid/EV Battery Pack connectors X1 and X2

⇒ If 10 Ω or greater, replace the applicable high voltage cable.

⇓ If less than 10 Ω

7.6. Replace the A4 Hybrid /EV Battery Pack internal harness.

⇓ **If within the specified range**

8. Install the S15 Manual Service Disconnect ensuring the lever is fully engaged.
9. Connect the 12 V battery. Vehicle in Service Mode.
10. Test for less than 1 V between terminals listed below and ground;
    - Terminal 45
    - Terminal 47

⇒ **If 1 V or greater**

Repair the short to voltage in the circuit.

⇓ **If less than 1 V**

11. Vehicle OFF. Disconnect the X358 harness connector at the A4 Hybrid /EV Battery Pack.
12. Test for 35–45 Ω between the 5 V signal circuit terminal 2 and low reference terminal 1 X358 harness connector.

⇒ **If not within the specified range**

Replace the A4 Hybrid/EV Battery Pack internal harness

⇓ **If within the specified range**

13. Replace the K114B Hybrid/EV Powertrain Control Module 2.

Repair Instructions

Perform the *Diagnostic Repair Verification on page 6-123* after completing the repair.

- *Drive Motor Battery High Voltage Manual Disconnect Lever Replacement on page 9-445* for S15 Manual Service Disconnect
- *Auxiliary Battery Wiring Harness Replacement (High Voltage Connector X2) on page 9-530* or *Auxiliary Battery Wiring Harness Replacement (Connector X1) on page 9-531* or *Auxiliary Battery Wiring Harness Replacement (Battery Cell Temperature Sensors, Current Sensor, X357, X358) on page 9-532* or *Auxiliary Battery Wiring Harness Replacement (Battery Cell Connectors, Battery Energy Control Module, Battery Interface Control Module) on page 9-535* for A4 Hybrid/EV Battery Pack internal harness
- *Control Module References on page 6-3* for hybrid/EV powertrain control module 2 replacement, programming and setup.

DTC P0A7F

Diagnostic Instructions

- Perform the *Diagnostic System Check - Vehicle on page 6-91* prior to using this diagnostic procedure.
- Review *Strategy Based Diagnosis on page 6-83* for an overview of the diagnostic approach.
- *Diagnostic Procedure Instructions on page 6-84* provides an overview of each diagnostic category.

DTC Descriptor

DTC P0A7F: Hybrid/EV Battery Pack

Circuit/System Description

The hybrid/EV powertrain control module 2 calculates the high voltage battery pack capability and determines the high voltage battery pack end of life.

Conditions for Running the DTC

- Vehicle ON.
- The system voltage is at least 10.2 V.
- Hybrid battery temperature is greater than 0° C (32° F).
- Hybrid battery temperature is less than 40° C (104° F).
- Hybrid battery state of charge is between 10.8 % and 99 %.
- When the hybrid/EV powertrain control module 2 calculates the actual battery power has exceeded the power limits multiplied by seconds of duration is greater than 50 %.
- None of the following DTCs are set: P0A9C, P0A9D, P0A9E, P0ABB, P0ABC, P0ABD, P0AC1, P0AC2, P0AC6, P0AC7, P0AC8, P0ACB, P0ACC, P0ACD, P0AE9, P0AEA, P0AEB, P0AF8, P0BC3, P0BC4, P0BC5, P0C34, P0C35, P0C36, P0C7D, P0C7E, P0C7F, P0C82, P0C83, P0C84, P0C89, P0C8A, P0C8B, P0C8E, P0C8F, P0C90, P0C93, P0C94, P0C95, P0C98, P0C99, P0C9A, P0CA9, P0CAA, P0CAB, P0CAE, P0CAF, P0CB0, P0CB3, P0CB4, P0CB5, P0CB8, P0CB9, P0CBA, P1A07, P1E8E, P1E8F, P1E90, P1E91, P1E93, P1E94, P1E95, P1E96, P1E97, P1E99, P1E9A, P1E9B, P1E9C, P1E9D, P1E9F, P1EA0, P1EA1, P1EA2, P1EA3, P1EA5, P1EB1, P1EB2, P1EB3, P1EB4, P1EB5, P1EBA, P1EBB, U0111, U185A, U2401, U2603, U2604, U2605, or U2606.

Conditions for Setting the DTC

- Battery voltage and current is varying. Requires more than 10 minutes of city driving.
- When the hybrid/EV powertrain control module 2 calculates the power limits is less than the KW end of life power threshold.

Action Taken When the DTC Sets

DTC P0A7F is a type B DTC.

Conditions for Clearing the DTC

DTC P0A7F is a type B DTC.

Diagnostic Aids

Removing the manual service disconnect before disconnecting the 12 V battery may cause a DTC P0A7F to set.

Reference Information

Schematic Reference

Hybrid/EV Energy Storage Schematics on page 9-348

Connector End View Reference

Component Connector End Views on page 11-455

Description and Operation

Drive Motor Battery System Description on page 9-545

Electrical Information Reference

- *Circuit Testing on page 11-871*
- *Connector Repairs on page 11-895*
- *Testing for Intermittent Conditions and Poor Connections on page 11-877*
- *Wiring Repairs on page 11-883*

DTC Type Reference

Powertrain Diagnostic Trouble Code (DTC) Type Definitions on page 6-92

Scan Tool Reference

Control Module References on page 6-3 for scan tool information

Special Tools

EL-48900 HEV Safety Kit

For equivalent regional tools, refer to *Special Tools on page 9-549*.

Circuit/System Verification

Note: Removing the manual service disconnect before disconnecting the 12 V battery may cause a DTC P0A7F to set. Incorrectly performing the High Voltage Disabling procedure steps will cause false DTCs to set and result in misdiagnosis of vehicle components.

1. Verify that no other DTCs are set.

⇒ **If any other DTCs are set**

Refer to *Diagnostic Trouble Code (DTC) List - Vehicle on page 6-92*

⇓ **No other DTCs are set**

2. Verify DTC P0A7F is set.

⇒ **If DTC P0A7F is set**

2.1. Clear the DTC. Vehicle OFF, disconnect the 12 V battery. Refer to *Battery Negative Cable Disconnection and Connection on page 9-20*

2.2. Wait 30 seconds. Reconnect the 12 V battery. Refer to *Battery Negative Cable Disconnection and Connection on page 9-20*

2.3. Review and operate the vehicle according to the DTC Conditions for Running. Operate the vehicle for more than 10 minutes of city driving.

2.4. Verify that DTC P0A7F does not reset.

⇒ If DTC P0A7F resets, replace the A4 hybrid/EV battery pack.

⇓ If DTC P0A7F does not reset

2.5. All OK.

⇓ **If DTC P0A7F is not set**

3. All OK.

Repair Instructions

Perform the *Diagnostic Repair Verification on page 6-123* after completing the repair.

- *Drive Motor Battery Replacement and Shipping Preparation on page 9-524*
- *Control Module References on page 6-3* for battery energy control module and hybrid battery interface control modules replacement, programming and setup.

DTC P0AA1, P0AA4, P0AD9, P0ADD, P0AE2, P0AE4, P0D0A, P0D11, P1EBC, P1EBE-P1EC0, or P1EC3-P1EC5

Diagnostic Instructions

- Perform the *Diagnostic System Check - Vehicle on page 6-91* prior to using this diagnostic procedure.
- Review *Strategy Based Diagnosis on page 6-83* for an overview of the diagnostic approach.
- *Diagnostic Procedure Instructions on page 6-84* provides an overview of each diagnostic category.

DTC Descriptors

DTC P0AA1: Hybrid/EV Battery Positive Contactor Circuit Stuck Closed
DTC P0AA4: Hybrid/EV Battery Negative Contactor Circuit Stuck Closed
DTC P0AD9: Hybrid/EV Battery Positive Contactor Control Circuit
DTC P0ADD: Hybrid/EV Battery Negative Contactor Control Circuit
DTC P0AE2: Hybrid/EV Battery Precharge Contactor Circuit Stuck Closed
DTC P0AE4: Hybrid/EV Battery Precharge Contactor Control Circuit
DTC P0D0A: Battery Charging System Positive Contactor Control Circuit
DTC P0D11: Battery Charging System Negative Contactor Control Circuit
DTC P1EBC: Hybrid/EV Battery Multifunction Contactor Control Circuit
DTC P1EBE: Hybrid/EV Battery Multifunction Contactor Stuck Open
DTC P1EBF: Hybrid/EV Battery Multifunction Contactor Stuck Closed
DTC P1EC0: Hybrid/EV Battery System Contactor(s) Stuck Open
DTC P1EC3: Hybrid/EV Battery Pack Heater Transistor Control Circuit
DTC P1EC4: Hybrid/EV Battery Pack Heater Transistor Stuck Off
DTC P1EC5: Hybrid/EV Battery Pack Heater Transistor Stuck On

Diagnostic Fault Information

Circuit	Short to Ground	Open/High Resistance	Short to Voltage	Signal Performance
Relay Switch B+/Ignition	P0AA1, P0AA4, P0AD9, P0ADD, P0AE2, P0AE4, P0D0A, P0D11, P1EBC, P1EBE, P1EBF, P1EC0, P1EC3, P1EC4, P1EC5*	P0AA1, P0AA4, P0AD9, P0ADD, P0AE2, P0AE4, P0D0A, P0D11, P1EBC, P1EBE, P1EBF, P1EC0, P1EC3, P1EC4, P1EC5*	P0AA1, P0AA4, P0AD9, P0ADD, P0AE2, P0AE4, P0D0A, P0D11, P1EBC, P1EBE, P1EBF, P1EC0, P1EC3, P1EC4, P1EC5*	P0AA1, P0AA4, P0AD9, P0ADD, P0AE2, P0AE4, P0D0A, P0D11, P1EBC, P1EBE, P1EBF, P1EC0, P1EC3, P1EC4, P1EC5*
Relay Coil Control	P0AA1, P0AA4, P0AD9, P0ADD, P0AE2, P0AE4, P0D0A, P0D11, P1EBC, P1EBE, P1EBF, P1EC0, P1EC3, P1EC4, P1EC5*	P0AA1, P0AA4, P0AD9, P0ADD, P0AE2, P0AE4, P0D0A, P0D11, P1EBC, P1EBE, P1EBF, P1EC0, P1EC3, P1EC4, P1EC5*	P0AA1, P0AA4, P0AD9, P0ADD, P0AE2, P0AE4, P0D0A, P0D11, P1EBC, P1EBE, P1EBF, P1EC0, P1EC3, P1EC4, P1EC5*	P0AA1, P0AA4, P0AD9, P0ADD, P0AE2, P0AE4, P0D0A, P0D11, P1EBC, P1EBE, P1EBF, P1EC0, P1EC3, P1EC4, P1EC5*
Relay Coil Ground	—	P0AA1, P0AA4, P0AD9, P0ADD, P0AE2, P0AE4, P0D0A, P0D11, P1EBC, P1EBE, P1EBF, P1EC0, P1EC3, P1EC4, P1EC5*	—	—

* Other modules/DTCs may set, and multiple symptoms including no start may occur.

Circuit/System Description

The hybrid/EV battery contains 6 high voltage contactors and 1 module. The high voltage contactors and transistor allow the high voltage DC batteries to be connected to the vehicle or safely contain the high voltage DC within the hybrid/EV battery assembly. The 6 high voltage contactors consist of a main positive high voltage contactor, main negative high voltage contactor, charge positive high voltage contactor, charge negative high voltage contactor, multi-function high voltage contactor and precharge contactor. The 1 module is the heater module or heater control module. The contactors and module close and open in a specific sequence controlled by the hybrid/EV powertrain control module 2. The hybrid/EV powertrain control module 2 supplies voltage to the control circuit for the high voltage contactors/module. Ground is provided through the case ground and chassis.

Conditions for Running the DTC

P0AA1 and P0AA4

- Is run once during a precharge event.
- The main positive contactor is open for greater than 60 s.
- The precharge contactor is open for greater than 60 s.
- None of the following DTCs are set; P0ABB, P0ABC, P0ABD, P1AE8, or P1AE9.

P0AD9, P0ADD, P0AE4, P0D0A, P0D11, and P1EBC

The 12 V battery voltage is greater than 10.2 V.

P0AE2

- The main negative contactor is closed.
- The multifunction contactor is closed.
- The main positive contactor is open for greater than 60 s.
- The precharge contactor is open for greater than 60 s.
- None of the following DTCs are set; P0ABB, P0ABC, P0ABD, P1AE8, or P1AE9.

P1EBE and P1EC4

- The 12 V battery voltage is greater than 10.2 V.
- Runs once at the beginning of each charge cycle.
- The multifunction contactor is closed.
- The main negative contactor is open.
- The main positive contactor is open.
- Charge mode is Constant Current or Constant Voltage.
- Charge mode is not in heat only mode and idle mode.
- None of the following DTCs are set; P0AC0, P0AC1, P0AC2, P0D53, P0D54, or P1EBA.

P1EBF

CHARGE MODE

- Runs once during charger precharge.
- The 12 V battery voltage is greater than 10.2 V.
- The battery charger positive contactor was open for more than 2 s before closing.

OR

BATTERY HEATING ONLY MODE

- The 12 V battery voltage is greater than 10.2 V.
- The battery charger is in heating only mode.

P1EC0

- The 12 V battery voltage is greater than 10.2 V.
- The main positive and negative contactors are closed for more than 1 s.
- None of the following DTCs are set; P0ABB, P0ABC, P0ABD, P1AE8, or P1AE9.

P1EC3

- The Hybrid/EV Powertrain Control Module 2 is awake and communicating.
- The 12 V battery voltage is greater than 10.2 V.

P1EC5

- The 12 V battery voltage is greater than 10.2 V.
- During battery charger precharge mode.
- Runs once each charge cycle.
- The battery charger negative contactor is closed.
- The battery charger positive contactor is closed.
- The multifunction contactor is open.
- The commanded heater module duty cycle is less than 5 %.
- None of the following DTCs are set; P0AC0, P0AC1, P0AC2, P0D53, P0D54, or P1EBA.

Conditions for Setting the DTC

P0AA1

The positive rail bus voltage is greater than 30 V.

P0AA4

The negative rail bus voltage is greater than 30 V.

P0AD9, P0ADD, P0AE4, P0D0A, P0D11, and P1EBC

The Hybrid/EV Powertrain Control Module 2 has detected an open or short to voltage in the control circuit for the corresponding contactor.

P0AE2

The bus voltage is greater than 60% of battery voltage.

P1EBE

The Accumulated Battery Current less than 100 A has been detected for 4 s.

P1EBF

CHARGE MODE

The charger high voltage output is greater than or equal to 133 V for the first 300 ms of the charger precharge mode.

OR

BATTERY HEATING ONLY MODE

Battery current of more than 1 A is detected at the charger during battery heater only mode.

P1EC0

The main bus voltage is less than 80 % of battery voltage.

P1EC3

The Hybrid/EV Powertrain Control Module 2 has detected a fault in the heater module control circuit.

P1EC4

The total Accumulated Battery Current difference between the battery charger output current and the battery charging current after 4 s is less than 200 A.

P1EC5

The battery charger sensed current is greater than 0.4 A during the battery charger precharge mode with the multifunction and heater module commanded OFF.

Action Taken When the DTC Sets

- DTCs P1EBF, P1EC0, or P1EC5 are Type A DTCs.
- DTCs P0AA1, P0AA4, P0AD9, P0ADD, P0AE2, P0AE4, P0D0A, P0D11, P1EBC, or P1EC3 are Type B DTCs.
- DTCs P1EBE or P1EC4 are Type A, B or C DTCs depending on HPCM2 calibration.

Conditions for Clearing the DTC

- DTCs P1EBF, P1EC0, or P1EC5 are Type A DTCs.
- DTCs P0AA1, P0AA4, P0AD9, P0ADD, P0AE2, P0AE4, P0D0A, P0D11, P1EBC, or P1EC3 are Type B DTCs.
- DTCs P1EBE or P1EC4 are Type A, B or C DTCs depending on HPCM2 calibration.

Diagnostic Aids

- DTC P1EC5 may cause a overheat condition and set a DTC P0C4A.
- DTC P0ADD will result in precharge too long and set a DTC P0C78.
- DTCs P1EBE, or P1EC0 will set a DTC P0AF8 if the vehicle is ON or vehicle in service mode while the contactors are stuck OPEN.
- DTC P1EC3 will prevent battery heating and the vehicle will be unable to start in cold weather with battery temperatures below about −25°C (−13°F).
- DTCs P1EBE and P1EC4 may set whenever the charge cord is inserted, quickly removed, and then reinserted. A post-production calibration change prevents these DTCs from illuminating the MIL for this condition.

Note: If the high voltage contactors opened while under high current load, replace the drive motor battery wire junction block relay. The following conditions could cause the high voltage contactors to open while under high current load:

- A collision resulting in supplemental inflatable restraint deployment.
- A loss of power or ground to the Hybrid/EV Powertrain Control Module 2 while the vehicle is moving.

Reference Information

Schematic Reference

Hybrid/EV Energy Storage Schematics on page 9-348

Plug-In Charging Schematics on page 9-553

Connector End View Reference

Component Connector End Views on page 11-455

Description and Operation

Drive Motor Battery System Description on page 9-545

Electrical Information Reference

- *Circuit Testing on page 11-871*
- *Connector Repairs on page 11-895*
- *Testing for Intermittent Conditions and Poor Connections on page 11-877*
- *Wiring Repairs on page 11-883*

DTC Type Reference

Powertrain Diagnostic Trouble Code (DTC) Type Definitions on page 6-92

Scan Tool Reference

Control Module References on page 6-3 for scan tool information

Special Tools

- *EL-48900* HEV Safety Kit or equivalent Dealer Equipment
- *EL-51099* Low Voltage Jumper Harness Extension

For equivalent regional tools, refer to *Special Tools on page 9-549*.

Circuit/System Verification

1. Vehicle in Service Mode.
2. Verify that DTC P0AA6 is not set.

⇒ **If the DTC is set**

Refer to *DTC P0AA6, P0DAA, P1AE6, or P1F0E on page 9-392*.

⇓ **If the DTCs is not set**

3. Verify that DTC P1EBE, P1EC4 and P1EC6 are not set.

⇒ **If ALL DTCs are set**

Refer to Circuit/System Testing.

⇒ **If DTC P1EBE or P1EC4 is set without P1EC6**

3.1. Ensure HPCM2 has the latest calibration.

3.2. Clear the DTCs and advise the customer that rapid charge cord cycling may set the DTCs. Refer to Diagnostic Aids.

⇓ **If neither DTC P1EBE or P1EC4 is set**

4. Verify that DTC P0AA1, P0AA4, P0AD9, P0ADD, P0AE2, P0AE4, P0D0A, P0D11, P1EBC, P1EBF, P1EC0, P1EC3 or P1EC5 is not set.

⇒ **If any of the DTCs are set**

Refer to Circuit/System Testing.

⇓ **None of the DTCs are set**

Note: The following setup steps MUST BE PERFORMED EXACTLY in order to exercise the contactors.

5. Vehicle OFF. Turn ON the park lamps.

Note:

- **DO NOT** press the power button and enter Vehicle in Service Mode or Vehicle ON.
- Ignore P0ABC after pulling the S15 Manual Service Disconnect.

6. Command the Hybrid/EV Battery Contactors ALL OPEN with a scan tool.
7. Disconnect the S15 Manual Service Disconnect.

Note:

- **DO NOT** use the Release Control button to turn OFF any of the contactors. Once the Release Control button is pushed the Circuit/System Verification will need to be restarted from the beginning.
- The following steps can be performed in any sequence or a single contactor can be exercised to verify a complaint.

8. Command the Hybrid/EV Battery Negative Contactor CLOSED and ALL OPEN with a scan tool while listening for the contactor to close and open. The Hybrid/EV Battery Negative Contactor should be heard closing and opening.

⇒ **If the Hybrid/EV Battery Negative Contactor does not open and close**

Refer to Hybrid/EV Battery Negative Contactor Diagnosis.

⇓ **If the Hybrid/EV Battery Negative Contactor does open and close**

9. Command the Hybrid/EV Battery Positive Contactor CLOSED and ALL OPEN with a scan tool while listening for the contactor to close and open. The Hybrid/EV Battery Positive Contactor should be heard closing and opening.

⇒ **If the Hybrid/EV Battery Positive Contactor does not open and close**

Refer to Hybrid/EV Battery Positive Contactor Diagnosis.

⇓ **If the Hybrid/EV Battery Positive Contactor does open and close**

10. Command the Hybrid/EV Battery Charging System Negative Contactor CLOSED and ALL OPEN with a scan tool while listening for the contactor to close and open. The Hybrid/EV Battery Charging System Negative Contactor should be heard closing and opening.

⇒ **If the Hybrid/EV Battery Charging System Negative Contactor does not open and close**

Refer to Battery Charging System Negative Contactor Diagnosis.

⇓ **If the Hybrid/EV Battery Charging System Negative Contactor does open and close**

11. Command the Hybrid/EV Battery Charging System Positive Contactor CLOSED and ALL OPEN with a scan tool while listening for the contactor to close and open. The Hybrid/EV Battery Charging System Positive Contactor should be heard closing and opening.

⇒ **If the Hybrid/EV Battery Charging System Positive Contactor does not open and close**

Refer to Battery Charging System Positive Contactor Diagnosis.

⇓ **If the Hybrid/EV Battery Charging System Positive Contactor does open and close**

12. Command the Hybrid/EV Battery Multifunction Contactor CLOSED and ALL OPEN with a scan tool while listening for the contactor to close and open. The Hybrid/EV Battery Multifunction Contactor should be heard opening and closing.

⇒ **If the Hybrid/EV Battery Multifunction Contactor does not open and close**

Refer to Hybrid/EV Battery Multifunction Contactor Diagnosis.

⇓ **If the Hybrid/EV Battery Multifunction Contactor does open and close**

13. Command the Hybrid/EV Battery Precharge Contactor CLOSED and ALL OPEN with a scan tool while listening for the contactor to close and open. The Hybrid/EV Battery Precharge Contactor should be heard opening and closing.

⇒ **If the Hybrid/EV Battery Precharge Contactor does not open and close**

Refer to Hybrid/EV Battery Precharge Contactor Diagnosis.

⇓ **If the Hybrid/EV Battery Precharge Contactor does open and close**

14. Command the Hybrid/EV Battery Contactors ALL OPEN with a scan tool.
15. Turn OFF the park lamps. Connect the S15 Manual Service Disconnect.
16. Connect the charge cord and complete a charge cycle.
17. With the charge cord connected, use the key FOB to initiate a remote start. Verify that DTC P0AA1, P0AA4, P0AD9, P0ADD, P0AE2, P0AE4, P0D0A, P0D11, P1EBC, P1EBE-P1EBF, P1EC0, or P1EC3-P1EC5 is not set.

⇒ **If any of the DTCs are set**

Refer to Circuit/System Testing.

⇓ **None of the DTCs are set**

18. Disconnect the charge cord.
19. Vehicle ON, verify that the vehicle is not in REDUCED PROPULSION.

⇒ **Vehicle is in REDUCED PROPULSION**

19.1. Verify that no DTCs are set.

⇒ DTCs are set, Refer to *Diagnostic Trouble Code (DTC) List - Vehicle on page 6-92*

⇓ No DTCs are set

19.2. Vehicle in Service Mode.

19.3. Perform the Hybrid/EV Battery Pack Capacity Learn. Refer to *Hybrid/EV Battery Pack Capacity Learn on page 9-541*

19.4. Vehicle ON, verify that the vehicle is not in REDUCED PROPULSION and no DTCs are set.

⇒ Vehicle is in REDUCED PROPULSION and DTCs are set

DTCs are set, Refer to *Diagnostic Trouble Code (DTC) List - Vehicle on page 6-92*

⇓ Vehicle is ON

19.5. All OK.

⇓ **Vehicle is not in REDUCED PROPULSION**

20. All OK.

Circuit/System Testing

P0AE2 or P0AE4 – Hybrid/EV Battery Precharge Contactor Diagnosis

Danger: Always perform the High Voltage Disabling procedure prior to servicing any High Voltage component or connection. Personal Protection Equipment (PPE) and proper procedures must be followed.

The High Voltage Disabling procedure includes the following steps:

- ***Identify how to disable high voltage.***
- ***Identify how to test for the presence of high voltage.***
- ***Identify condition under which high voltage is always present and personal protection equipment (PPE) and proper procedures must be followed.***

Before working on any high voltage system, be sure to wear the following Personal Protection Equipment:

- ***Safety glasses with appropriate side shields when within 15 meters (50 feet) of the vehicle, either indoors or outdoors.***
- ***Certified and up-to-date Class "0" Insulation gloves rated at 1000V with leather protectors.***
  - ***Visually and functionally inspect the gloves before use.***
  - ***Wear the Insulation gloves with leather protectors at all times when working with the high voltage battery assembly, whether the system is energized or not.***

Failure to follow the procedures may result in serious injury or death.

Note: The Battery Pack will utilize an exchange program. Please consult the most recent revision of bulletin/PI #PIP5112, available in Service Information (SI), for a list of approved Battery Pack service procedures. Components that may be removed and serviced without exchanging the complete battery pack are identified in the bulletin/PI. Please contact the GM Technical Assistance Center if you have any questions.

1. Vehicle OFF, remove the Underbody Front Air Deflector Replacement Center. Refer to*Underbody Front Air Deflector Replacement (Center) on page 3-126*. Disconnect the X358 harness connector at the A4 Hybrid/EV Battery Pack.
2. Test for less than 10 Ω between the ground circuit terminal 5 and ground.

⇒ **If 10 Ω or greater**

2.1. Vehicle OFF.

2.2. Test for less than 2 Ω in the ground circuit end to end.

⇒ If 2 Ω or greater, repair the open/high resistance in the circuit.

⇒ If less than 2 Ω, repair the open/high resistance in the ground connection.

⇓ **If less than 10 Ω**

3. Vehicle OFF, install the *EL-51099* Low Voltage Jumper Harness Extension

   Note: The following setup steps MUST BE PERFORMED EXACTLY in order to exercise the contactor.

4. Vehicle OFF, turn ON the park lamps.

   Note:

   - **DO NOT** press the power button and enter Vehicle in Service Mode or Vehicle ON.
   - Ignore P0ABC after pulling the S15 Manual Service Disconnect.

5. Command the Hybrid/EV Battery Contactors ALL OPEN with a scan tool.
6. Disconnect the S15 Manual Service Disconnect. Disconnect the *EL-51099* Low Voltage Jumper Harness Extension from the X358 harness connector at the A4 Hybrid/EV Battery Pack. Connect a test lamp between the control circuit terminal 9 and ground.
7. Verify that the test lamp is OFF.

⇒ **If the test lamp is ON**

7.1. Vehicle OFF, disconnect the X1 harness connector at the K114B Hybrid Powertrain Control Module 2. Vehicle in Service Mode.

7.2. Test for less than 1 V between the control circuit and ground.

⇒ If 1 V or greater, repair the short to voltage on the circuit.

⇒ If less than 1 V, replace the K114B Hybrid Powertrain Control Module 2.

⇓ **If the test lamp is OFF**

Note: DO NOT use the Release Control button to turn OFF the contactor. Once the Release Control button is pushed the setup steps will need to be restarted from the beginning.

8. Command the Hybrid/EV Battery Precharge Contactor CLOSED and ALL OPEN with a scan tool. Verify that the test lamp turns ON and OFF.

⇒ **If the test lamp does not turn ON and OFF**

8.1. Vehicle OFF, turn OFF the park lamps. Remove the test lamp. Disconnect the X1 harness connector at the K114B Hybrid Powertrain Control Module 2.

8.2. Test for infinite resistance between control circuit and ground.

⇒ If less than infinite resistance, repair the short to ground on the circuit.

⇓ If infinite resistance

8.3. Test for less than 2 Ω in the control circuit end to end.

⇒ If 2 Ω or greater, repair the open/high resistance in the circuit.

⇒ If less than 2 Ω, replace the K114B Hybrid Powertrain Control Module 2.

⇓ **If the test lamp does turn ON and OFF**

9. Vehicle OFF, remove the Drive Motor Battery Cover. Refer to *Drive Motor Battery Cover Replacement on page 9-449*
10. Disconnect the X359 harness connector at the A28 Hybrid/EV Battery Contactor Assembly.
11. Test for infinite resistance between control circuit 9 X358 and ground circuit terminal 5 X358.

⇒ **If less than infinite resistance**

Replace the A4 Hybrid/EV Battery Pack.

⇓ **If infinite resistance**

12. Replace the A28 Hybrid/EV Battery Contactor Assembly.

P1EC3, P1EC4, or P1EC5 – Hybrid/EV Battery Pack Heater Transistor Diagnosis

Danger: Always perform the High Voltage Disabling procedure prior to servicing any High Voltage component or connection. Personal Protection Equipment (PPE) and proper procedures must be followed.

The High Voltage Disabling procedure includes the following steps:

- ***Identify how to disable high voltage.***
- ***Identify how to test for the presence of high voltage.***
- ***Identify condition under which high voltage is always present and personal protection equipment (PPE) and proper procedures must be followed.***

Before working on any high voltage system, be sure to wear the following Personal Protection Equipment:

- ***Safety glasses with appropriate side shields when within 15 meters (50 feet) of the vehicle, either indoors or outdoors.***
- ***Certified and up-to-date Class "0" Insulation gloves rated at 1000V with leather protectors.***
  - ***Visually and functionally inspect the gloves before use.***
  - ***Wear the Insulation gloves with leather protectors at all times when working with the high voltage battery assembly, whether the system is energized or not.***

Failure to follow the procedures may result in serious injury or death.

Note: The Battery Pack will utilize an exchange program. Please consult the most recent revision of bulletin/PI #PIP5112, available in Service Information (SI), for a list of approved Battery Pack service procedures. Components that may be removed and serviced without exchanging the complete battery pack are identified in the bulletin/PI. Please contact the GM Technical Assistance Center if you have any questions.

1. Vehicle OFF, remove the Underbody Front Air Deflector Replacement Center. Refer to*Underbody Front Air Deflector Replacement (Center) on page 3-126*. Disconnect the X358 harness connector at the A4 Hybrid/EV Battery Pack.
2. Test for less than 10 Ω between the ground circuit terminal 5 and ground.

⇒ **If 10 Ω or greater**

2.1. Vehicle OFF.

2.2. Test for less than 2 Ω in the ground circuit end to end.

⇒ If 2 Ω or greater, repair the open/high resistance in the circuit.

⇒ If less than 2 Ω, repair the open/high resistance in the ground connection.

⇓ **If less than 10 Ω**

3. Remove the test lamp. Connect a test lamp between the control circuit terminal 14 and ground. Vehicle in Service Mode.
4. Verify that the test lamp is OFF.

⇒ **If the test lamp is ON**

4.1. Vehicle OFF, remove the test lamp. Disconnect the X1 harness connector at the K114B Hybrid Powertrain Control Module 2. Vehicle in Service Mode.

4.2. Test for less than 1 V between the control circuit and ground.

⇒ If 1 V or greater, repair the short to voltage on the circuit.

⇒ If less than 1 V, replace the K114B Hybrid Powertrain Control Module 2.

⇓ **If the test lamp is OFF**

5. Vehicle OFF, remove the test lamp. Disconnect the X1 harness connector at the K114B Hybrid Powertrain Control Module 2.
6. Test for infinite resistance between control circuit and ground.

⇒ **If less than infinite resistance**

Repair the short to ground on the circuit.

⇓ **If infinite resistance**

7. Test for less than 2 Ω in the control circuit end to end.

⇒ **If 2 Ω or greater**

Repair the open/high resistance in the circuit.

⇓ **If less than 2 Ω**

8. Verify that DTC P1EC4 is not set

⇒ **If the DTC is set**

8.1. Remove the Drive Motor Battery Cover. Refer to *Drive Motor Battery Cover Replacement on page 9-449*

8.2. Disconnect the harness connector at the E54 Hybrid/EV Battery Pack Coolant Heater.

8.3. Test for 61–75 Ω between terminal A and terminal B at the E54 Hybrid/EV Battery Pack Coolant Heater.

⇒ If not within the specified range, test or replace the X55W Hybrid/EV Battery Pack Coolant Heater fuse and replace the E54 Hybrid/EV Battery Pack Coolant Heater.

⇓ If within the specified range

Note: The following continuity tests must be performed using an Insulation Multimeter. Select the Isolation test setting, then select the 500 V range.

8.4. With the *EL-50772* Insulation Multimeter, set on the Isolation test setting, test for greater than 500k Ω between the terminals at the E54 Hybrid/EV Battery Pack Coolant Heater listed below and chassis ground;

8.5. Terminal A

8.6. Terminal B

⇒ If less than 500k Ω on either terminal, test or replace the X55W Hybrid/EV Battery Pack Coolant Heater fuse and replace the E54 Hybrid/EV Battery Pack Coolant Heater.

⇓ If greater than 500k Ω on both circuits

8.7. Replace the A28 Hybrid/EV Battery Contactor Assembly.

8.8. Verify that DTC P1EC3, P1EC4, or P1EC5 does not set while operating the vehicle within the Conditions for Running the DTC.

⇒ If any of the DTCs set, replace the K114B Hybrid Powertrain Control Module 2.

⇓ If none of the DTCs set

8.9. All OK.

⇓ **If DTC P1EC4 is not set**

9. Vehicle OFF, remove the Drive Motor Battery Cover. Refer to *Drive Motor Battery Cover Replacement on page 9-449*

10. Disconnect the X359 harness connector at the A28 Hybrid/EV Battery Contactor Assembly.

11. Test for infinite resistance between control circuit 14 X358 and ground circuit terminal 5 X358.

⇒ **If less than infinite resistance**

Replace the A4 Hybrid/EV Battery Pack.

⇓ **If infinite resistance**

12. Replace the A28 Hybrid/EV Battery Contactor Assembly.

P1EC0 – Hybrid/EV Battery System Contactors Stuck Open Diagnosis

Danger: Always perform the High Voltage Disabling procedure prior to servicing any High Voltage component or connection. Personal Protection Equipment (PPE) and proper procedures must be followed.

The High Voltage Disabling procedure includes the following steps:

- ***Identify how to disable high voltage.***
- ***Identify how to test for the presence of high voltage.***
- ***Identify condition under which high voltage is always present and personal protection equipment (PPE) and proper procedures must be followed.***

Before working on any high voltage system, be sure to wear the following Personal Protection Equipment:

- ***Safety glasses with appropriate side shields when within 15 meters (50 feet) of the vehicle, either indoors or outdoors.***
- ***Certified and up-to-date Class "0" Insulation gloves rated at 1000V with leather protectors.***
  - ***Visually and functionally inspect the gloves before use.***
  - ***Wear the Insulation gloves with leather protectors at all times when working with the high voltage battery assembly, whether the system is energized or not.***

Failure to follow the procedures may result in serious injury or death.

Note: The Battery Pack will utilize an exchange program. Please consult the most recent revision of bulletin/PI #PIP5112, available in Service Information (SI), for a list of approved Battery Pack service procedures. Components that may be removed and serviced without exchanging the complete battery pack are identified in the bulletin/PI. Please contact the GM Technical Assistance Center if you have any questions.

1. Vehicle OFF, remove the Underbody Front Air Deflector Replacement Center. Refer to*Underbody Front Air Deflector Replacement (Center) on page 3-126*. Disconnect the X358 harness connector at the A4 Hybrid/EV Battery Pack.

2. Test for less than 10 Ω between the ground circuit terminal 5 and ground.

⇒ **If 10 Ω or greater**

2.1. Vehicle OFF.

2.2. Test for less than 2 Ω in the ground circuit end to end.

⇒ If 2 Ω or greater, repair the open/high resistance in the circuit.

⇒ If less than 2 Ω, repair the open/high resistance in the ground connection.

⇓ **If less than 10 Ω**

3. Vehicle OFF, install the *EL-51099* Low Voltage Jumper Harness Extension

Note: The following setup steps MUST BE PERFORMED EXACTLY in order to exercise the contactor.

4. Vehicle OFF, turn ON the park lamps.

Note:

- **DO NOT** press the power button and enter Vehicle in Service Mode or Vehicle ON.
- Ignore P0ABC after pulling the S15 Manual Service Disconnect.

5. Command the Hybrid/EV Battery Contactors ALL OPEN with a scan tool.
6. Disconnect the S15 Manual Service Disconnect. Disconnect the *EL-51099* Low Voltage Jumper Harness Extension from the X358 harness connector at the A4 Hybrid/EV Battery Pack. Connect a test lamp between the control circuit terminal 7 and ground.
7. Verify that the test lamp is OFF.

⇒ **If the test lamp is ON**

7.1. Vehicle OFF, disconnect the X1 harness connector at the K114B Hybrid Powertrain Control Module 2. Vehicle in Service Mode.

7.2. Test for less than 1 V between the control circuit and ground.

⇒ If 1 V or greater, repair the short to voltage on the circuit.

⇒ If less than 1 V, replace the K114B Hybrid Powertrain Control Module 2.

⇓ **If the test lamp is OFF**

Note: DO NOT use the Release Control button to turn OFF the contactor. Once the Release Control button is pushed the setup steps will need to be restarted from the beginning.

8. Command the Hybrid/EV Battery Negative Contactor CLOSED and ALL OPEN with a scan tool. Verify that the test lamp turns ON and OFF.

⇒ **If the test lamp does not turn ON and OFF**

8.1. Vehicle OFF, turn OFF the park lamps. Remove the test lamp. Disconnect the X1 harness connector at the K114B Hybrid Powertrain Control Module 2.

8.2. Test for infinite resistance between control circuit and ground.

⇒ If less than infinite resistance, repair the short to ground on the circuit.

⇓ If infinite resistance

8.3. Test for less than 2 Ω in the control circuit end to end.

⇒ If 2 Ω or greater, repair the open/high resistance in the circuit.

⇒ If less than 2 Ω, replace the K114B Hybrid Powertrain Control Module 2.

⇓ **If the test lamp does turn ON and OFF**

9. Command the Hybrid/EV Battery Contactors ALL OPEN with a scan tool. Connect the test lamp between the control circuit terminal 10 and ground.

Note: DO NOT use the Release Control button to turn OFF the contactor. Once the Release Control button is pushed the setup steps will need to be restarted from the beginning.

10. Command the Hybrid/EV Battery Positive Contactor CLOSED and ALL OPEN with a scan tool. Verify that the test lamp turns ON and OFF.

⇒ **If the test lamp does not turn ON and OFF**

10.1. Vehicle OFF, turn OFF the park lamps. Remove the test lamp. Disconnect the X1 harness connector at the K114B Hybrid Powertrain Control Module 2.

10.2. Test for infinite resistance between control circuit and ground.

⇒ If less than infinite resistance, repair the short to ground on the circuit.

⇓ If infinite resistance

10.3. Test for less than 2 Ω in the control circuit end to end.

⇒ If 2 Ω or greater, repair the open/high resistance in the circuit.

⇒ If less than 2 Ω, replace the K114B Hybrid Powertrain Control Module 2.

⇓ **If the test lamp does turn ON and OFF**

11. Vehicle OFF, remove the Drive Motor Battery Cover. Refer to *Drive Motor Battery Cover Replacement on page 9-449*
12. Disconnect the X359 harness connector at the A28 Hybrid/EV Battery Contactor Assembly.

13. Test for infinite resistance between control circuits listed below and ground circuit terminal 5 X358;
    - Terminal 7 X358
    - Terminal 10 X358

⇒ **If less than infinite resistance on either circuit**

Replace the A4 Hybrid/EV Battery Pack.

⇓ **If infinite resistance on both circuits**

14. Replace the A28 Hybrid/EV Battery Contactor Assembly.

P0AA4 or P0ADD – Hybrid/EV Battery Negative Contactor Diagnosis

Danger: Always perform the High Voltage Disabling procedure prior to servicing any High Voltage component or connection. Personal Protection Equipment (PPE) and proper procedures must be followed.

The High Voltage Disabling procedure includes the following steps:

- ***Identify how to disable high voltage.***
- ***Identify how to test for the presence of high voltage.***
- ***Identify condition under which high voltage is always present and personal protection equipment (PPE) and proper procedures must be followed.***

Before working on any high voltage system, be sure to wear the following Personal Protection Equipment:

- ***Safety glasses with appropriate side shields when within 15 meters (50 feet) of the vehicle, either indoors or outdoors.***
- ***Certified and up-to-date Class "0" Insulation gloves rated at 1000V with leather protectors.***
  - ***Visually and functionally inspect the gloves before use.***
  - ***Wear the Insulation gloves with leather protectors at all times when working with the high voltage battery assembly, whether the system is energized or not.***

Failure to follow the procedures may result in serious injury or death.

Note: The Battery Pack will utilize an exchange program. Please consult the most recent revision of bulletin/PI #PIP5112, available in Service Information (SI), for a list of approved Battery Pack service procedures. Components that may be removed and serviced without exchanging the complete battery pack are identified in the bulletin/PI. Please contact the GM Technical Assistance Center if you have any questions.

1. Vehicle OFF, remove the Underbody Front Air Deflector Replacement Center. Refer to *Underbody Front Air Deflector Replacement (Center) on page 3-126*. Disconnect the X358 harness connector at the A4 Hybrid/EV Battery Pack.
2. Test for less than 10 Ω between the ground circuit terminal 5 and ground.

⇒ **If 10 Ω or greater**

2.1. Vehicle OFF.

2.2. Test for less than 2 Ω in the ground circuit end to end.

⇒ If 2 Ω or greater, repair the open/high resistance in the circuit.

⇒ If less than 2 Ω, repair the open/high resistance in the ground connection.

⇓ **If less than 10 Ω**

3. Vehicle OFF, install the *EL-51099* Low Voltage Jumper Harness Extension

   Note: The following setup steps MUST BE PERFORMED EXACTLY in order to exercise the contactor.

4. Vehicle OFF, turn ON the park lamps.

   Note:
   - **DO NOT** press the power button and enter Vehicle in Service Mode or Vehicle ON.
   - Ignore P0ABC after pulling the S15 Manual Service Disconnect.
5. Command the Hybrid/EV Battery Contactors ALL OPEN with a scan tool.
6. Disconnect the S15 Manual Service Disconnect. Disconnect the *EL-51099* Low Voltage Jumper Harness Extension from the X358 harness connector at the A4 Hybrid/EV Battery Pack. Connect a test lamp between the control circuit terminal 7 and ground.
7. Verify that the test lamp is OFF.

⇒ **If the test lamp is ON**

7.1. Vehicle OFF, disconnect the X1 harness connector at the K114B Hybrid Powertrain Control Module 2. Vehicle in Service Mode.

7.2. Test for less than 1 V between the control circuit and ground.

⇒ If 1 V or greater, repair the short to voltage on the circuit.

⇒ If less than 1 V, replace the K114B Hybrid Powertrain Control Module 2.

⇓ **If the test lamp is OFF**

Note: DO NOT use the Release Control button to turn OFF the contactor. Once the Release Control button is pushed the setup steps will need to be restarted from the beginning.

8. Command the Hybrid/EV Battery Negative Contactor CLOSED and ALL OPEN with a scan tool. Verify that the test lamp turns ON and OFF.

⇒ **If the test lamp does not turn ON and OFF**

8.1. Vehicle OFF, turn OFF the park lamps. Remove the test lamp. Disconnect the X1 harness connector at the K114B Hybrid Powertrain Control Module 2.

8.2. Test for infinite resistance between control circuit and ground.

⇒ If less than infinite resistance, repair the short to ground on the circuit.

⇓ If infinite resistance

8.3. Test for less than 2 Ω in the control circuit end to end.

⇒ If 2 Ω or greater, repair the open/high resistance in the circuit.

⇒ If less than 2 Ω, replace the K114B Hybrid Powertrain Control Module 2.

⇓ **If the test lamp does turn ON and OFF**

9. Vehicle OFF, remove the Drive Motor Battery Cover. Refer to *Drive Motor Battery Cover Replacement on page 9-449*
10. Disconnect the X359 harness connector at the A28 Hybrid/EV Battery Contactor Assembly.
11. Test for infinite resistance between control circuit 7 X358 and ground circuit terminal 5 X358.

⇒ **If less than infinite resistance**

Replace the A4 Hybrid/EV Battery Pack.

⇓ **If infinite resistance**

12. Replace the A28 Hybrid/EV Battery Contactor Assembly.

P0AA1 or P0AD9 – Hybrid/EV Battery Positive Contactor Diagnosis

Danger: Always perform the High Voltage Disabling procedure prior to servicing any High Voltage component or connection. Personal Protection Equipment (PPE) and proper procedures must be followed.

The High Voltage Disabling procedure includes the following steps:

- ***Identify how to disable high voltage.***
- ***Identify how to test for the presence of high voltage.***
- ***Identify condition under which high voltage is always present and personal protection equipment (PPE) and proper procedures must be followed.***

Before working on any high voltage system, be sure to wear the following Personal Protection Equipment:

- ***Safety glasses with appropriate side shields when within 15 meters (50 feet) of the vehicle, either indoors or outdoors.***
- ***Certified and up-to-date Class "0" Insulation gloves rated at 1000V with leather protectors.***
  - ***Visually and functionally inspect the gloves before use.***
  - ***Wear the Insulation gloves with leather protectors at all times when working with the high voltage battery assembly, whether the system is energized or not.***

Failure to follow the procedures may result in serious injury or death.

Note: The Battery Pack will utilize an exchange program. Please consult the most recent revision of bulletin/PI #PIP5112, available in Service Information (SI), for a list of approved Battery Pack service procedures. Components that may be removed and serviced without exchanging the complete battery pack are identified in the bulletin/PI. Please contact the GM Technical Assistance Center if you have any questions.

1. Vehicle OFF, remove the Underbody Front Air Deflector Replacement Center. Refer to*Underbody Front Air Deflector Replacement (Center) on page 3-126*. Disconnect the X358 harness connector at the A4 Hybrid/EV Battery Pack.
2. Test for less than 10 Ω between the ground circuit terminal 5 and ground.

⇒ **If 10 Ω or greater**

2.1. Vehicle OFF.

2.2. Test for less than 2 Ω in the ground circuit end to end.

⇒ If 2 Ω or greater, repair the open/high resistance in the circuit.

⇒ If less than 2 Ω, repair the open/high resistance in the ground connection.

⇓ **If less than 10 Ω**

3. Vehicle OFF, install the *EL-51099* Low Voltage Jumper Harness Extension

Note: The following setup steps MUST BE PERFORMED EXACTLY in order to exercise the contactor.

4. Vehicle OFF, turn ON the park lamps.

Note:

- **DO NOT** press the power button and enter Vehicle in Service Mode or Vehicle ON.
- Ignore P0ABC after pulling the S15 Manual Service Disconnect.

5. Command the Hybrid/EV Battery Contactors ALL OPEN with a scan tool.
6. Disconnect the S15 Manual Service Disconnect. Disconnect the *EL-51099* Low Voltage Jumper Harness Extension from the X358 harness connector at the A4 Hybrid/EV Battery Pack. Connect a test lamp between the control circuit terminal 10 and ground.

7. Verify that the test lamp is OFF.

⇒ **If the test lamp is ON**

7.1. Vehicle OFF, disconnect the X1 harness connector at the K114B Hybrid Powertrain Control Module 2. Vehicle in Service Mode.

7.2. Test for less than 1 V between the control circuit and ground.

⇒ If 1 V or greater, repair the short to voltage on the circuit.

⇒ If less than 1 V, replace the K114B Hybrid Powertrain Control Module 2.

⇓ **If the test lamp is OFF**

Note: DO NOT use the Release Control button to turn OFF the contactor. Once the Release Control button is pushed the setup steps will need to be restarted from the beginning.

8. Command the Hybrid/EV Battery Positive Contactor CLOSED and ALL OPEN with a scan tool. Verify that the test lamp turns ON and OFF.

⇒ **If the test lamp does not turn ON and OFF**

8.1. Vehicle OFF, turn OFF the park lamps. Remove the test lamp. Disconnect the X1 harness connector at the K114B Hybrid Powertrain Control Module 2.

8.2. Test for infinite resistance between control circuit and ground.

⇒ If less than infinite resistance, repair the short to ground on the circuit.

⇓ If infinite resistance

8.3. Test for less than 2 Ω in the control circuit end to end.

⇒ If 2 Ω or greater, repair the open/high resistance in the circuit.

⇒ If less than 2 Ω, replace the K114B Hybrid Powertrain Control Module 2.

⇓ **If the test lamp does turn ON and OFF**

9. Vehicle OFF, remove the Drive Motor Battery Cover. Refer to *Drive Motor Battery Cover Replacement on page 9-449*

10. Disconnect the X359 harness connector at the A28 Hybrid/EV Battery Contactor Assembly.

11. Test for infinite resistance between control circuit 10 X358 and ground circuit terminal 5 X358.

⇒ **If less than infinite resistance**

Replace the A4 Hybrid/EV Battery Pack.

⇓ **If infinite resistance**

12. Replace the A28 Hybrid/EV Battery Contactor Assembly.

P0D11 – Battery Charging System Negative Contactor Diagnosis

Danger: Always perform the High Voltage Disabling procedure prior to servicing any High Voltage component or connection. Personal Protection Equipment (PPE) and proper procedures must be followed.

The High Voltage Disabling procedure includes the following steps:

- ***Identify how to disable high voltage.***
- ***Identify how to test for the presence of high voltage.***
- ***Identify condition under which high voltage is always present and personal protection equipment (PPE) and proper procedures must be followed.***

Before working on any high voltage system, be sure to wear the following Personal Protection Equipment:

- ***Safety glasses with appropriate side shields when within 15 meters (50 feet) of the vehicle, either indoors or outdoors.***
- ***Certified and up-to-date Class "0" Insulation gloves rated at 1000V with leather protectors.***
  - ***Visually and functionally inspect the gloves before use.***
  - ***Wear the Insulation gloves with leather protectors at all times when working with the high voltage battery assembly, whether the system is energized or not.***

Failure to follow the procedures may result in serious injury or death.

Note: The Battery Pack will utilize an exchange program. Please consult the most recent revision of bulletin/PI #PIP5112, available in Service Information (SI), for a list of approved Battery Pack service procedures. Components that may be removed and serviced without exchanging the complete battery pack are identified in the bulletin/PI. Please contact the GM Technical Assistance Center if you have any questions.

1. Vehicle OFF, remove the Underbody Front Air Deflector Replacement Center. Refer to*Underbody Front Air Deflector Replacement (Center) on page 3-126*. Disconnect the X358 harness connector at the A4 Hybrid/EV Battery Pack.

2. Test for less than 10 Ω between the ground circuit terminal 5 and ground.

⇒ **If 10 Ω or greater**

2.1. Vehicle OFF.

2.2. Test for less than 2 Ω in the ground circuit end to end.

⇒ If 2 Ω or greater, repair the open/high resistance in the circuit.

⇒ If less than 2 Ω, repair the open/high resistance in the ground connection.

⇓ **If less than 10 Ω**

3. Vehicle OFF, install the *EL-51099* Low Voltage Jumper Harness Extension

Note: The following setup steps MUST BE PERFORMED EXACTLY in order to exercise the contactor.

4. Vehicle OFF, turn ON the park lamps.

Note:

- **DO NOT** press the power button and enter Vehicle in Service Mode or Vehicle ON.
- Ignore P0ABC after pulling the S15 Manual Service Disconnect.

5. Command the Hybrid/EV Battery Contactors ALL OPEN with a scan tool.
6. Disconnect the S15 Manual Service Disconnect. Disconnect the *EL-51099* Low Voltage Jumper Harness Extension from the X358 harness connector at the A4 Hybrid/EV Battery Pack. Connect a test lamp between the control circuit terminal 11 and ground.
7. Verify that the test lamp is OFF.

⇒ **If the test lamp is ON**

7.1. Vehicle OFF, disconnect the X1 harness connector at the K114B Hybrid Powertrain Control Module 2. Vehicle in Service Mode.

7.2. Test for less than 1 V between the control circuit and ground.

⇒ If 1 V or greater, repair the short to voltage on the circuit.

⇒ If less than 1 V, replace the K114B Hybrid Powertrain Control Module 2.

⇓ **If the test lamp is OFF**

Note: DO NOT use the Release Control button to turn OFF the contactor. Once the Release Control button is pushed the setup steps will need to be restarted from the beginning.

8. Command the Hybrid/EV Battery Charger Negative Contactor CLOSED and ALL OPEN with a scan tool. Verify that the test lamp turns ON and OFF.

⇒ **If the test lamp does not turn ON and OFF**

8.1. Vehicle OFF, turn OFF the park lamps. Remove the test lamp. Disconnect the X1 harness connector at the K114B Hybrid Powertrain Control Module 2.

8.2. Test for infinite resistance between control circuit and ground.

⇒ If less than infinite resistance, repair the short to ground on the circuit.

⇓ If infinite resistance

8.3. Test for less than 2 Ω in the control circuit end to end.

⇒ If 2 Ω or greater, repair the open/high resistance in the circuit.

⇒ If less than 2 Ω, replace the K114B Hybrid Powertrain Control Module 2.

⇓ **If the test lamp does turn ON and OFF**

9. Vehicle OFF, remove the Drive Motor Battery Cover. Refer to *Drive Motor Battery Cover Replacement on page 9-449*
10. Disconnect the X359 harness connector at the A28 Hybrid/EV Battery Contactor Assembly.
11. Test for infinite resistance between control circuit 11 X358 and ground circuit terminal 5 X358.

⇒ **If less than infinite resistance**

Replace the A4 Hybrid/EV Battery Pack.

⇓ **If infinite resistance**

12. Replace the A28 Hybrid/EV Battery Contactor Assembly.

P0D0A – Battery Charging System Positive Contactor Diagnosis

Danger: Always perform the High Voltage Disabling procedure prior to servicing any High Voltage component or connection. Personal Protection Equipment (PPE) and proper procedures must be followed.

The High Voltage Disabling procedure includes the following steps:

- ***Identify how to disable high voltage.***
- ***Identify how to test for the presence of high voltage.***
- ***Identify condition under which high voltage is always present and personal protection equipment (PPE) and proper procedures must be followed.***

Before working on any high voltage system, be sure to wear the following Personal Protection Equipment:

- ***Safety glasses with appropriate side shields when within 15 meters (50 feet) of the vehicle, either indoors or outdoors.***
- ***Certified and up-to-date Class "0" Insulation gloves rated at 1000V with leather protectors.***
  - ***Visually and functionally inspect the gloves before use.***
  - ***Wear the Insulation gloves with leather protectors at all times when working with the high voltage battery assembly, whether the system is energized or not.***

Failure to follow the procedures may result in serious injury or death.

Note: The Battery Pack will utilize an exchange program. Please consult the most recent revision of bulletin/PI #PIP5112, available in Service Information (SI), for a list of approved Battery Pack service procedures. Components that may be removed and serviced without exchanging the complete battery pack are identified in the bulletin/PI. Please contact the GM Technical Assistance Center if you have any questions.

1. Vehicle OFF, remove the Underbody Front Air Deflector Replacement Center. Refer to*Underbody Front Air Deflector Replacement (Center) on page 3-126*. Disconnect the X358 harness connector at the A4 Hybrid/EV Battery Pack.
2. Test for less than 10 Ω between the ground circuit terminal 5 and ground.

⇒ **If 10 Ω or greater**

2.1. Vehicle OFF.

2.2. Test for less than 2 Ω in the ground circuit end to end.

⇒ If 2 Ω or greater, repair the open/high resistance in the circuit.

⇒ If less than 2 Ω, repair the open/high resistance in the ground connection.

⇓ **If less than 10 Ω**

3. Vehicle OFF, install the *EL-51099* Low Voltage Jumper Harness Extension

Note: The following setup steps MUST BE PERFORMED EXACTLY in order to exercise the contactor.

4. Vehicle OFF, turn ON the park lamps.

   Note:

   - **DO NOT** press the power button and enter Vehicle in Service Mode or Vehicle ON.
   - Ignore P0ABC after pulling the S15 Manual Service Disconnect.

5. Command the Hybrid/EV Battery Contactors ALL OPEN with a scan tool.
6. Disconnect the S15 Manual Service Disconnect. Disconnect the *EL-51099* Low Voltage Jumper Harness Extension from the X358 harness connector at the A4 Hybrid/EV Battery Pack. Connect a test lamp between the control circuit terminal 12 and ground.
7. Verify that the test lamp is OFF.

⇒ **If the test lamp is ON**

7.1. Vehicle OFF, disconnect the X1 harness connector at the K114B Hybrid Powertrain Control Module 2. Vehicle in Service Mode.

7.2. Test for less than 1 V between the control circuit and ground.

⇒ If 1 V or greater, repair the short to voltage on the circuit.

⇒ If less than 1 V, replace the K114B Hybrid Powertrain Control Module 2.

⇓ **If the test lamp is OFF**

Note: DO NOT use the Release Control button to turn OFF the contactor. Once the Release Control button is pushed the setup steps will need to be restarted from the beginning.

8. Command the Hybrid/EV Battery Charger Positive Contactor CLOSED and ALL OPEN with a scan tool. Verify that the test lamp turns ON and OFF.

⇒ **If the test lamp does not turn ON and OFF**

8.1. Vehicle OFF, turn OFF the park lamps. Remove the test lamp. Disconnect the X1 harness connector at the K114B Hybrid Powertrain Control Module 2.

8.2. Test for infinite resistance between control circuit and ground.

⇒ If less than infinite resistance, repair the short to ground on the circuit.

⇓ If infinite resistance

8.3. Test for less than 2 Ω in the control circuit end to end.

⇒ If 2 Ω or greater, repair the open/high resistance in the circuit.

⇒ If less than 2 Ω, replace the K114B Hybrid Powertrain Control Module 2.

⇓ **If the test lamp does turn ON and OFF**

9. Vehicle OFF, remove the Drive Motor Battery Cover. Refer to *Drive Motor Battery Cover Replacement on page 9-449*
10. Disconnect the X359 harness connector at the A28 Hybrid/EV Battery Contactor Assembly.
11. Test for infinite resistance between control circuit 12 X358 and ground circuit terminal 5 X358.

⇒ **If less than infinite resistance**

Replace the A4 Hybrid/EV Battery Pack.

⇓ **If infinite resistance**

12. Replace the A28 Hybrid/EV Battery Contactor Assembly.

P1EBC, P1EBE, or P1EBF – Hybrid/EV Battery Multifunction Contactor Diagnosis

Danger: Always perform the High Voltage Disabling procedure prior to servicing any High Voltage component or connection. Personal Protection Equipment (PPE) and proper procedures must be followed.

The High Voltage Disabling procedure includes the following steps:

- ***Identify how to disable high voltage.***
- ***Identify how to test for the presence of high voltage.***
- ***Identify condition under which high voltage is always present and personal protection equipment (PPE) and proper procedures must be followed.***

Before working on any high voltage system, be sure to wear the following Personal Protection Equipment:

- ***Safety glasses with appropriate side shields when within 15 meters (50 feet) of the vehicle, either indoors or outdoors.***
- ***Certified and up-to-date Class "0" Insulation gloves rated at 1000V with leather protectors.***
  - ***Visually and functionally inspect the gloves before use.***
  - ***Wear the Insulation gloves with leather protectors at all times when working with the high voltage battery assembly, whether the system is energized or not.***

Failure to follow the procedures may result in serious injury or death.

Note: The Battery Pack will utilize an exchange program. Please consult the most recent revision of bulletin/PI #PIP5112, available in Service Information (SI), for a list of approved Battery Pack service procedures. Components that may be removed and serviced without exchanging the complete battery pack are identified in the bulletin/PI. Please contact the GM Technical Assistance Center if you have any questions.

1. Vehicle OFF, remove the Underbody Front Air Deflector Replacement Center. Refer to*Underbody Front Air Deflector Replacement (Center) on page 3-126*. Disconnect the X358 harness connector at the A4 Hybrid/EV Battery Pack.

2. Test for less than 10 Ω between the ground circuit terminal 5 and ground.

⇒ **If 10 Ω or greater**

2.1. Vehicle OFF.

2.2. Test for less than 2 Ω in the ground circuit end to end.

⇒ If 2 Ω or greater, repair the open/high resistance in the circuit.

⇒ If less than 2 Ω, repair the open/high resistance in the ground connection.

⇓ **If less than 10 Ω**

3. Vehicle OFF, install the *EL-51099* Low Voltage Jumper Harness Extension

Note: The following setup steps MUST BE PERFORMED EXACTLY in order to exercise the contactor.

4. Vehicle OFF, turn ON the park lamps.

Note:

- **DO NOT** press the power button and enter Vehicle in Service Mode or Vehicle ON.
- Ignore P0ABC after pulling the S15 Manual Service Disconnect.

5. Command the Hybrid/EV Battery Contactors ALL OPEN with a scan tool.
6. Disconnect the S15 Manual Service Disconnect. Disconnect the *EL-51099* Low Voltage Jumper Harness Extension from the X358 harness connector at the A4 Hybrid/EV Battery Pack. Connect a test lamp between the control circuit terminal 8 and ground.
7. Verify that the test lamp is OFF.

⇒ **If the test lamp is ON**

7.1. Vehicle OFF, disconnect the X1 harness connector at the K114B Hybrid Powertrain Control Module 2. Vehicle in Service Mode.

7.2. Test for less than 1 V between the control circuit and ground.

⇒ If 1 V or greater, repair the short to voltage on the circuit.

⇒ If less than 1 V, replace the K114B Hybrid Powertrain Control Module 2.

⇓ **If the test lamp is OFF**

Note: DO NOT use the Release Control button to turn OFF the contactor. Once the Release Control button is pushed the setup steps will need to be restarted from the beginning.

8. Command the Hybrid/EV Battery Multifunction Contactor CLOSED and ALL OPEN with a scan tool. Verify that the test lamp turns ON and OFF.

⇒ **If the test lamp does not turn ON and OFF**

8.1. Vehicle OFF, turn OFF the park lamps. Remove the test lamp. Disconnect the X1 harness connector at the K114B Hybrid Powertrain Control Module 2.

8.2. Test for infinite resistance between control circuit and ground.

⇒ If less than infinite resistance, repair the short to ground on the circuit.

⇓ If infinite resistance

8.3. Test for less than 2 Ω in the control circuit end to end.

⇒ If 2 Ω or greater, repair the open/high resistance in the circuit.

⇒ If less than 2 Ω, replace the K114B Hybrid Powertrain Control Module 2.

⇓ **If the test lamp does turn ON and OFF**

9. Vehicle OFF, remove the Drive Motor Battery Cover. Refer to *Drive Motor Battery Cover Replacement on page 9-449*
10. Disconnect the X359 harness connector at the A28 Hybrid/EV Battery Contactor Assembly.
11. Test for infinite resistance between control circuit 8 X358 and ground circuit terminal 5 X358.

⇒ **If less than infinite resistance**

Replace the A4 Hybrid/EV Battery Pack.

⇓ **If infinite resistance**

12. Replace the A28 Hybrid/EV Battery Contactor Assembly.

Repair Instructions

Perform the *Diagnostic Repair Verification on page 6-123* after completing the repair.

- *Battery Heater Replacement on page 9-306*
- *Drive Motor Battery Positive High Voltage Contactor Relay Replacement on page 9-499*
- *Drive Motor Battery Replacement and Shipping Preparation on page 9-524*
- *Control Module References on page 6-3* for hybrid/EV powertrain control module 2 replacement, programming and setup.

DTC P0AA6, P0DAA, P1AE6, or P1F0E

Diagnostic Instructions

- Perform the *Diagnostic System Check - Vehicle on page 6-91* prior to using this diagnostic procedure.
- Review *Strategy Based Diagnosis on page 6-83* for an overview of the diagnostic approach.
- *Diagnostic Procedure Instructions on page 6-84* provides an overview of each diagnostic category.

DTC Descriptors

DTC P0AA6: Hybrid/EV Battery Voltage System Isolation Lost

DTC P0DAA: Battery Charging Voltage System Isolation Lost

DTC P1AE6: Battery Energy Control Module Hybrid/EV Battery Voltage Isolation Sensor Circuit

DTC P1F0E: Battery Charging Voltage System Isolation Lost

Circuit/System Description

The vehicle is equipped with a high voltage isolation monitor feature. The purpose of the battery energy control module high voltage isolation monitor circuit is to test the resistance between the high voltage positive and negative direct current (DC) bus and chassis ground. The battery energy control module isolation monitoring system measures the resistance between the high voltage system and chassis ground in the following way. The battery energy control module places an AC signal on the high voltage system and monitors its amplitude. A reduced amplitude return signal indicates a loss of resistance to chassis ground. This isolation monitor method is sometimes referred to as the active isolation monitor. The hybrid powertrain control module 2 requests the battery energy control module to perform this test. Measurement values are reported to the hybrid powertrain control module 2, which makes the determination of an isolation fault.

The isolation check for P0AA6 Hybrid Battery Voltage System Isolation Lost runs when all the contactors (main positive contactor, main negative contactor, multi-purpose contactor, precharge contactor, charger positive contactor and charger negative contactor) are open. This check monitors isolation in the drive motor battery system. This check runs only once during the time that the hybrid powertrain control module 2 is awake and runs after the contactors have been open for 10 seconds. This monitor typically runs when the vehicle is turned off after a drive cycle. DTC P0AA6 Hybrid Battery Voltage System Isolation Lost may also run when the vehicle is first started, if there is a long enough period between the hybrid powertrain control module 2 waking up and the main contactors closing.

The isolation check for P0DAA Battery Charging Voltage System Isolation Lost runs when the main contactors, precharge contactor, and the multi-purpose contactor are open and the charger contactors are closed. This check monitors for isolation in the charger system along with the drive motor battery system. This check runs once during the time that the hybrid powertrain control module 2 is awake and requires that the contactors main and mult-purpose contactors be open and the charger contactors be closed for 10 seconds.

The battery energy control module runs an internal self check of the sensor circuit. When this test fails, DTC P1AE6 will be set.

Conditions for Running the DTC

P0AA6

- The hybrid powertrain control module 2 and battery energy control module are awake and communicating.
- The main positive and main negative contactors transition to open for 10 s.

P0DAA

The vehicle is in Charge Mode Only for 10 s.

P1AE6

- The 12 V battery voltage is greater than 9 V.
- The hybrid powertrain control module 2 and battery energy control module are awake and communicating.
- The hybrid powertrain control module 2 has requested the battery energy control module to run the isolation test.
- The main contactors transition to open after Vehicle OFF.

P1F0E

The vehicle is in Charge Mode Only for 10 s.

Conditions for Setting the DTC

P0AA6

- The battery energy control module has detected active isolation resistance is less than 325K Ω.
- 5 out of the last 10 Vehicle ON and Vehicle OFF cycles have failed.

P0DAA

- During charge mode the battery energy control module has detected active isolation resistance of less than 325K Ω after 10 seconds.
- 5 out of the last 10 Vehicle ON and Vehicle OFF cycles have failed.

P1AE6

The battery energy control module has detected no return AC signal, thus indicating a fault with the active isolation sensing circuits.

P1F0E

- During charge mode the battery energy control module has detected active isolation resistance of less than 325K Ω after 10 seconds.
- 5 out of the last 10 Vehicle ON and Vehicle OFF cycles have failed.

Conditions for Clearing the DTC

- DTCs P0AA6, P0DAA, P1AE6, and P1F0E are Type A DTCs.
- P0AA6, P0DAA, and P1F0E require one Vehicle ON and Vehicle OFF cycle with a minimum resistance of 400K Ω.

Diagnostic Aids

- A single high voltage contactor stuck closed can set DTC P0AA6, P0DAA, P1AE6, or P1F0E.
- Condensation or water intrusion into the hybrid/EV battery pack may cause DTC P0AA6, P0DAA, P1AE6, or P1F0E to set.
- Low or no coolant in the hybrid/EV battery cooling system may cause DTC P0AA6, P0DAA, P1AE6, or P1F0E to set.

Reference Information

Schematic Reference

- *Hybrid/EV Energy Storage Schematics on page 9-348*
- *Plug-In Charging Schematics on page 9-553*

Connector End View Reference

Component Connector End Views on page 11-455

Description and Operation

Drive Motor Battery System Description on page 9-545

Electrical Information Reference

- *Circuit Testing on page 11-871*
- *Connector Repairs on page 11-895*
- *Testing for Intermittent Conditions and Poor Connections on page 11-877*
- *Wiring Repairs on page 11-883*

DTC Type Reference

Powertrain Diagnostic Trouble Code (DTC) Type Definitions on page 6-92

Scan Tool Reference

Control Module References on page 6-3 for scan tool information

Special Tools

- *EL-48900* HEV Safety Kit
- *EL-50772* Insulation Multimeter

For equivalent regional tools, refer to *Special Tools on page 9-549*.

Circuit/System Verification

1. Verify that the vehicle hybrid/EV battery cooling system is full.

⇒ **If the hybrid/EV battery cooling system is low**

Refer to *Hybrid Cooling System Loss of Coolant (Drive Motor Battery Cooling System) on page 9-253* or *Hybrid Cooling System Loss of Coolant (Drive Motor Generator Power Inverter Module Cooling System) on page 9-254*.

2. Vehicle in Service Mode.
3. Verify that DTC P0A7E, P0AA1, P0AD9, P0ADD, P0AE2, P0AE4, P0C32, P0D0A, P0D11, P1EBC-P1EBF, P1EC0, P1EC3, or P1EC5 is not set.

⇒ **If any of the DTCs are set**

Refer to *Diagnostic Trouble Code (DTC) List - Vehicle on page 6-92*.

⇓ **If none of the DTCs are set**

4. Verify the scan tool hybrid powertrain control module 2 Isolation Test Resistance parameter is greater than 500k Ω.

⇒ **The parameter is less than 500k Ω**

4.1. Verify that DTC P0AA6, P0DAA, P1AE6 or P1F0E is not set.

⇒ If DTC P0AA6 or P1AE6 is set, replace the A4 Hybrid/EV Battery Pack.

⇒ If DTC P0DAA or P1F0E is set, refer to Circuit/ System Testing.

⇓ **The parameter is greater than 500k Ω**

5. All OK.

Circuit/System Testing

Danger: Always perform the High Voltage Disabling procedure prior to servicing any High Voltage component or connection. Personal Protection Equipment (PPE) and proper procedures must be followed.

The High Voltage Disabling procedure includes the following steps:

- ***Identify how to disable high voltage.***
- ***Identify how to test for the presence of high voltage.***
- ***Identify condition under which high voltage is always present and personal protection equipment (PPE) and proper procedures must be followed.***

Before working on any high voltage system, be sure to wear the following Personal Protection Equipment:

- ***Safety glasses with appropriate side shields when within 15 meters (50 feet) of the vehicle, either indoors or outdoors.***

- ***Certified and up-to-date Class "0" Insulation gloves rated at 1000V with leather protectors.***
  - ***Visually and functionally inspect the gloves before use.***
  - ***Wear the Insulation gloves with leather protectors at all times when working with the high voltage battery assembly, whether the system is energized or not.***

Failure to follow the procedures may result in serious injury or death.

Note: The Battery Pack will utilize an exchange program. Please consult the most recent revision of bulletin/PI #PIP5112, available in Service Information (SI), for a list of approved Battery Pack service procedures. Components that may be removed and serviced without exchanging the complete battery pack are identified in the bulletin/PI. Please contact the GM Technical Assistance Center if you have any questions.

1. Vehicle OFF, disable the high voltage. Refer to *High Voltage Disabling on page 9-363*.

   Note: The following continuity tests must be performed using an Insulation Multimeter. Select the Isolation test setting, then select the 500 V range.

2. With the *EL-50772* Insulation Multimeter, set on the Isolation test setting, test for greater than 400k Ω between the X2 harness connector terminals at the A4 Hybrid/EV Battery Pack listed below and chassis ground;
   - Terminal A
   - Terminal B

⇒ **If less than 400k Ω on either circuit**

2.1. Disconnect the X4 connector at the T18 Battery Charger.

2.2. Test for greater than 400k Ω between the circuit terminals and chassis ground.

⇒ If less than 400k Ω, replace the 300 V DC cables.

⇒ If greater than 400k Ω, replace the T18 Battery Charger.

⇓ **If greater than 400k Ω on both circuits**

3. Test for greater than 400k Ω between terminal A and terminal B X2.

⇒ **If less than 400k Ω**

3.1. Disconnect the X4 connector at the T18 Battery Charger.

3.2. Test for greater than 400k Ω between the circuit terminals.

⇒ If less than 400k Ω, replace the 300 V DC cables.

⇒ If greater than 400k Ω, replace the T18 Battery Charger.

⇓ **If greater than 400k Ω**

4. Remove the Drive Motor Battery Cover. Refer to *Drive Motor Battery Cover Replacement on page 9-449*
5. Disconnect the harness connector at the E54 Hybrid/EV Battery Pack Coolant Heater.
6. Test for 61–75 Ω between terminal A and terminal B at the E54 Hybrid/EV Battery Pack Coolant Heater.

⇒ **If not within the specified range**

Replace the E54 Hybrid/EV Battery Pack Coolant Heater.

⇓ **If within the specified range**

Note: The following continuity test must be performed using an *EL-50772* Insulation Multimeter. Select the Isolation test setting, then select the 500 V range.

7. With the *EL-50772* Insulation Multimeter, set on the Isolation test setting, test for 550M Ω between the E54 Hybrid/EV Battery Pack Coolant Heater terminals listed below and battery tray ground:
   - Terminal A
   - Terminal B

⇒ **If less than 550M Ω**

Replace the E54 Hybrid/EV Battery Pack Coolant Heater.

⇓ **If 550M Ω or greater**

8. Verify that DTC P0AA6, P0DAA, P1AE6, or P1F0E is not set.

⇒ **If DTC P0AA6 is set**

Replace the A4 Hybrid/EV Battery Pack

⇒ **If DTC P0DAA , P1AE6, or P1F0E is set**

Replace the A28 Hybrid Battery Contactor Assembly and K16 Battery Energy Control Module.

⇓ **If none of the DTCs are set**

9. All OK.

Repair Instructions

Perform the *Diagnostic Repair Verification on page 6-123* after completing the repair.

- *300-Volt Battery Positive and Negative Cable Replacement (Drive Motor Generator Power Inverter Module to Drive Motor Battery) on page 9-454* or *300-Volt Battery Positive and Negative Cable Replacement (Drive Motor Generator Power Inverter Module to High Voltage Battery Disconnect Module) on page 9-457*
- *Drive Motor Battery Positive High Voltage Contactor Relay Replacement on page 9-499*
- *Battery Heater Replacement on page 9-306*
- *Drive Motor Battery Charger Replacement on page 9-649*
- *Drive Motor Battery Replacement and Shipping Preparation on page 9-524*
- *Control Module References on page 6-3* for battery energy control module replacement, programming and setup.

DTC P0ABB, P0ABC, or P0ABD

Diagnostic Instructions

- Perform the *Diagnostic System Check - Vehicle on page 6-91* prior to using this diagnostic procedure.
- Review *Strategy Based Diagnosis on page 6-83* for an overview of the diagnostic approach.
- *Diagnostic Procedure Instructions on page 6-84* provides an overview of each diagnostic category.

DTC Descriptors

DTC P0ABB: Hybrid/EV Battery Voltage Sensor Performance

DTC P0ABC: Hybrid/EV Battery Voltage Sensor Circuit Low Voltage

DTC P0ABD: Hybrid/EV Battery Voltage Sensor Circuit High Voltage

Circuit/System Description

The hybrid/EV powertrain control module 2 monitors individual cell voltage readings from the battery energy control module. The battery energy control module monitors the voltage of the 96 battery cell groups. Voltage sense lines are attached to each individual cell group, and these sense lines terminate at a connector located on the top surface of the battery section.

Conditions for Running the DTC

P0ABB

- The hybrid/EV powertrain control module 2 and battery energy control module is awake and communicating.
- DTC P0ABC, P0ABB, P0ABD, P0AF8, P0B3B, P0B3C, P0B3D, P0B3E, P0B40, P0B41, P0B42, P0B43, P0B45, P0B46, P0B47, P0B48, P0B4A, P0B4B, P0B4C, P0B4D, P0B4F, P0B50, P0B51, P0B52, P0B54, P0B55, P0B56, P0B57, P0B59, P0B5A, P0B5B, P0B5C, P0B5E, P0B5F, P0B60, P0B61, P0B63, P0B64, P0B65, P0B66, P0B68, P0B69, P0B6A, P0B6B, P0B6D, P0B6E, P0B6F, P0B70, P0B73, P0B74, P0B75, P0B77, P0B78, P0B79, P0B7A, P0B7C, P0B7D, P0B7E, P0B7F, P0B81, P0B82, P0B83, P0B84, P0B86, P0B87, P0B88, P0B89, P0B8B, P0B8C, P0B8D, P0B8E, P0B91, P0B92, P0B93, P0B95, P0B96, P0B97, P0B98, P0B9A, P0B9B, P0B9C, P0B9D, P0B9F, P0BA0, P0BA1, P0BA2, P0BA4, P0BA5, P0BA6, P0BA7, P0BA9, P0BAA, P0BAB, P0BAC, P0BAE, P0BAF, P0BB0, P0BB1, P0BB3, P0BB4, P0BB5, P0BB6, P0BB8, P0BB9, P0BBA, P0BBB, P1A07, P1B16, P1B17, P1B18, P1B19, P1B1A, P1B1B, P1B1C, P1B1D, P1B1E, P1B1F, P1B20, P1B21, P1B22, P1B23, P1B24, P1B25, P1B26, P1B27, P1B28, P1B29, P1B2A, P1B2B, P1B2C, P1B2D, P1B45, P1B46, P1B47, P1B48, P1B49, P1B4A, P1B4B, P1B4C, P1B4D, P1B4E, P1B4F, P1B50, P1B51, P1B52, P1B53, P1B54, P1B55, P1B56, P1B57, P1B58, P1B59, P1B5A, P1B5B, P1B5C, P1B5D, P1B5E, P1B5F, P1B60, P1B61, P1B62, P1B63, P1B64, P1B65, P1B66, P1B67, P1B68, P1B69, P1B6A, P1B6B, P1B6C, P1B6D, P1B6E, P1B6F, P1B70, P1B71, P1B72, P1B73, P1B74, P1B75, P1B76, P1B77, P1B78, P1B79, P1B7A, P1B7B, P1B7C, P1B7D, P1B7E, P1B7F, P1B80, P1B81, P1B82, P1B83, P1B84, P1B85, P1B86, P1B87, P1B88, P1B89, P1B8A, P1B8B, P1B8C, P1B8D, P1B8E, P1B8F, P1B90, P1B91, P1B92, P1B93, P1B94, P1B95, P1B96, P1B97, P1B98, P1B99, P1B9A, P1B9B, P1B9C, P1B9D, P1B9E, P1B9F, P1BA0, P1BA1, P1BA2, P1BA3, P1BA4, P1BA5, P1BA6, P1BA7, P1BA8, P1BA9, P1BAA, P1BAB, P1BAC, P1BAD, P1BAE, P1BAF, P1BB0, P1BB1, P1BB2, P1BB3, P1BB4, P1BB5, P1BB6, P1BB7, P1BB8, P1BB9, P1BBA, P1BBB, P1BBC, P1BBD, P1BBE, P1BBF, P1BC0, P1BC1, P1BC2, P1BC3, P1BC4, P1BC5, P1BC6, P1BC7, P1BC8, P1BC9, P1BCA, P1BCB, P1BCC, P1BCD, P1BCE, P1BCF, P1BD0, P1BD1, P1BD2, P1BD3, P1BD4, P1BD5, P1BD6, P1BD7, P1BD8, P1BD9, P1BDA, P1BDB, P1BDC, P1BDD, P1BDE, P1BDF, P1BE0, P1BE1, P1BE2, P1BE3, P1BE4, P1BE5, P1BE6, P1BE7, P1BE8, P1BE9, P1BEA, P1BEB, P1BEC, P1BED, P1BEE, P1BEF, P1BF0, P1BF1, P1BF2, P1BF3, P1BF4, P1BF5, P1BF6, P1BF7, P1BF8, P1BF9, P1BFA, P1BFB, P1BFC, P1BFD, P1BFE, P1E01, P1E02, P1E03, P1E04, P1E05, P1E06, P1E4C, P1E4D, P1E4E, P1E4F, P1E50, P1E51, P1E52, P1E53, P1E54, P1E56, P1E57, P1E58, P1E59, P1E5A, P1E5B, P1E5C, P1E5D, P1E5E, P1E5F, P1E60, P1E61, P1E62, P1E63, P1E64, P1E65, P1E66, P1E67, P1E68, P1E69, P1E6A, P1E6B, P1E6C, P1E6E, P1E6F, P1E70, P1E71, P1E72, P1E73, P1E74, P1E75, P1E76, P1E77, P1E78, P1E79, P1E7A, P1E7B, P1E7C, P1E7D, P1E7E, P1E7F, P1E80, P1E81, P1E82, P1E83, P1E84, P1E86, P1E87, P1E88, P1E89, P1E8A, P1E8E, P1E8F, P1E90, P1E91, P1E93, P1E94, P1E95, P1E96, P1E97, P1E99, P1E9A, P1E9B, P1E9C, P1E9D, P1E9F, P1EA0, P1EA1, P1EA2, P1EA3, P1EA5, P1EB1, P1EB5, P1F66, P1F67, P1F68, P1F69, P1F6A, P1F6B, P1F6C, P1F6D, P1F6E, P1F6F, P1F70, P1F71, P1F72, P1F73, P1F74, P1F75, P1F76, P1F77, P1F78, P1F79, P1F7A, P1F7B, P1F7C, P1F7D, P1F7E, P1F7F, P1F80, P1F81, P1F82, P1F83, P1F84, P1F85, P1F86, P1F87, P1F88, P1F89, P1F8A, P1F8B, P1F8C, P1F8D, P1F8E, P1F8F, P1F90, P1F91, P1F92, P1F93, P1F94, P1F95, U0111, U185A, U2401, U2603, U2604, U2605, or U2606 is not set.

P0ABC and P0ABD

- The hybrid/EV powertrain control module 2 and battery energy control module is awake and communicating.
- The 12 V battery voltage is greater than or equal to 9 V.
- DTC U2621 is not set.

Conditions for Setting the DTC

P0ABB

The hybrid/EV powertrain control module 2 detects difference of greater than 10 V between the average cell group voltage multiplied by 96 and the voltage measured at battery side of the main contactors.

P0ABC

The battery energy control module detects the terminal voltage is less than 24 V on the battery side of the main contactors.

P0ABD

The battery energy control module detects the terminal voltage is greater than 479 V on the battery side of the main contactors.

Action Taken When the DTC Sets

DTCs P0ABB, P0ABC, and P0ABD are type A DTCs.

Conditions for Clearing the DTC

DTCs P0ABB, P0ABC, and P0ABD are type A DTCs.

Diagnostic Aids

The hybrid/EV battery pack high voltage manual service disconnect is out, not installed correctly, or a blown manual service disconnect fuse will cause P0ABB and/or P0ABC to set.

Reference Information

Schematic Reference

Hybrid/EV Energy Storage Schematics on page 9-348

Connector End View Reference

Component Connector End Views on page 11-455

Description and Operation

Drive Motor Battery System Description on page 9-545

Electrical Information Reference

- *Circuit Testing on page 11-871*
- *Connector Repairs on page 11-895*
- *Testing for Intermittent Conditions and Poor Connections on page 11-877*
- *Wiring Repairs on page 11-883*

DTC Type Reference

Powertrain Diagnostic Trouble Code (DTC) Type Definitions on page 6-92

Scan Tool Reference

Control Module References on page 6-3 for scan tool information

Special Tools

EL-48900 HEV Safety Kit

For equivalent regional tools, refer to *Special Tools on page 9-549*.

Circuit/System Verification

1. Vehicle in Service Mode.
2. Observe and record the battery energy control module scan tool Hybrid Battery Pack Terminal 1 Voltage parameter and the hybrid/EV powertrain control module 2 Hybrid Battery Pack Voltage parameter. The readings should be between 224–403 V, and should be within 10 V of each other.

⇒ **The parameters are not within the specified range or within 10 V of each other**

Refer to Circuit/System Testing.

⇓ **The parameters are within the specified range and within 10 V of each other**

3. All OK.

Circuit/System Testing

Danger: Always perform the High Voltage Disabling procedure prior to servicing any High Voltage component or connection. Personal Protection Equipment (PPE) and proper procedures must be followed.

The High Voltage Disabling procedure includes the following steps:

- ***Identify how to disable high voltage.***
- ***Identify how to test for the presence of high voltage.***
- ***Identify condition under which high voltage is always present and personal protection equipment (PPE) and proper procedures must be followed.***

Before working on any high voltage system, be sure to wear the following Personal Protection Equipment:

- ***Safety glasses with appropriate side shields when within 15 meters (50 feet) of the vehicle, either indoors or outdoors.***
- ***Certified and up-to-date Class "0" Insulation gloves rated at 1000V with leather protectors.***
  - ***Visually and functionally inspect the gloves before use.***
  - ***Wear the Insulation gloves with leather protectors at all times when working with the high voltage battery assembly, whether the system is energized or not.***

Failure to follow the procedures may result in serious injury or death.

Note: The Battery Pack will utilize an exchange program. Please consult the most recent revision of bulletin/PI #PIP5112, available in Service Information (SI), for a list of approved Battery Pack service procedures. Components that may be removed and serviced without exchanging the

complete battery pack are identified in the bulletin/ PI. Please contact the GM Technical Assistance Center if you have any questions.

1. Vehicle OFF, disable the high voltage at the A4 Hybrid/EV Battery Pack. Refer to *High Voltage Disabling on page 9-363*.
2. Remove the A4 Hybrid/EV Battery Pack cover. Refer to *Drive Motor Battery Cover Replacement on page 9-449*.
3. Disconnect X10 harness connector at the K16 Battery Energy Control Module.
4. Test for less than 10 Ω between the terminals listed below:
   - Terminal B+ at the Hybrid/EV Battery Section 6
   - Terminal 20 at the K16 Battery Energy Control Module

⇒ **If greater than 10 Ω**

Replace the A4 Hybrid/EV Battery Pack.

⇓ **If 10 Ω or less**

5. Replace the K16 Battery Energy Control Module.

Repair Instructions

Perform the *Diagnostic Repair Verification on page 6-123* after completing the repair.

- *Drive Motor Battery Replacement and Shipping Preparation on page 9-524*
- *Control Module References on page 6-3* for battery energy control module replacement, programming and setup.

DTC P0AF8

Diagnostic Instructions

- Perform the *Diagnostic System Check - Vehicle on page 6-91* prior to using this diagnostic procedure.
- Review *Strategy Based Diagnosis on page 6-83* for an overview of the diagnostic approach.
- *Diagnostic Procedure Instructions on page 6-84* provides an overview of each diagnostic category.

DTC Descriptor

DTC P0AF8: Hybrid/EV System Voltage

Circuit/System Description

The hybrid battery contains 192 cells. Groups of two cells are welded together in parallel called cell groups. There are a total of 96 cell groups in the hybrid battery assembly. These cell groups are electrically connected in series. Each individual cell group is rated at 3.78V for a nominal system voltage of 363 V direct current when the high voltage battery is at 50% state of charge. Cell voltage will range from 2.7V to 4.15V under normal temperatures and not under load. There are 16 cell groups in each battery section. The battery cell groups are joined to form 6 equal sections.

The battery energy control module monitors the voltage of the 96 battery cell groups. There are diagnostics for 12 hybrid battery interface control modules. The battery energy control module encompasses 10 of the 12 hybrid battery interface control modules. The hybrid battery interface control module attached to the side of module 6 encompasses 2 of the 12 hybrid battery interface control modules. The voltage sense lines are attached to each individual cell group, and these sense lines terminate at connectors located at the end of the battery section. Each connector has 16 voltage sense lines. A high voltage measuring harness connects the hybrid battery interface control module and the battery energy control module, to each of the battery sections. The hybrid battery interface control module encodes the voltage reading for the 16 individual cell groups in battery section 6 and transmits it to the battery energy control module. The hybrid/EV battery energy control module monitors and compares each of the 16 individual cell groups and the sum of the 16 cell total. The hybrid/EV battery interface control modules, hybrid/EV battery energy control module and low voltage harness are all serviceable components.

The hybrid/EV battery energy control module will diagnose its own systems and determine when a fault condition is present. Diagnostics and system status is communicated from the hybrid/EV battery energy control module to the hybrid/EV powertrain control module 2 through serial data. The hybrid/EV powertrain control module 2 is the host controller for diagnostic trouble code (DTC) information.

Conditions for Running the DTC

- The hybrid/EV battery main contactors are closed.
- None of the following DTCs are set; P0ABB, P0ABC, P0ABD, P1A07, P1AE8, P1AE9, P1AEA, P1AEB, P1AEC, P1AED, P1E28, or U1817.

OR

- The hybrid/EV battery main contactors are open.
- The charger contactors are closed.
- The multifunction contactor is closed.
- None of the following DTCs are set; P0ABB, P0ABC, P0ABD, P0D4E, P0D4F, P0D5C, P16C5, P1A07, P1EEB, P1EEC, P1ECE, or U1838.

Conditions for Setting the DTC

- The difference between the hybrid/EV battery pack voltage and the hybrid/EV powertrain control module bus voltage is greater than 12 V.

  OR
- The difference between the hybrid/EV battery pack voltage and the charger module bus voltage is greater than 12 V.

Action Taken When the DTC Sets

DTC P0AF8 is a Type A DTC.

Conditions for Clearing the DTC

- DTC P0AF8 is a Type A DTC.
- The *Clear Secured High Voltage DTCs on page 9-539* reset function must be performed to prevent resetting the DTC.

Diagnostic Aids

- An open charger fuse may cause DTC P0AF8 to set.
- DTCs P1EBD, P1EBE, or P1EC0 will set a DTC P0AF8 if the Vehicle is ON or Vehicle in Service Mode while the contactors are stuck OPEN

Reference Information

Schematic Reference

Hybrid/EV Energy Storage Schematics on page 9-348

Connector End View Reference

Component Connector End Views on page 11-455

Description and Operation

Drive Motor Battery System Description on page 9-545

Electrical Information Reference

- *Circuit Testing on page 11-871*
- *Connector Repairs on page 11-895*

- *Testing for Intermittent Conditions and Poor Connections on page 11-877*
- *Wiring Repairs on page 11-883*

DTC Type Reference

Powertrain Diagnostic Trouble Code (DTC) Type Definitions on page 6-92

Scan Tool Reference

Control Module References on page 6-3 for scan tool information

Special Tools

EL-48900 HEV Safety Kit

For equivalent regional tools, refer to *Special Tools on page 9-549*.

Circuit/System Verification

1. Verify that no other DTCs are set.

⇒ **If any DTCs are set**

Refer to *Diagnostic Trouble Code (DTC) List - Vehicle on page 6-92*.

⇓ **If no other DTCs are set**

2. Clear the P0AF8 and perform the Clear Secured High Voltage DTCs reset function. Refer to *Clear Secured High Voltage DTCs on page 9-539*.
3. Vehicle ON.
4. Observe the hybrid/EV powertrain control module Hybrid/EV Powertrain Control Module High Voltage Circuit parameter, hybrid/EV powertrain control module 2 Battery Pack Voltage parameter and the battery energy control module Hybrid Battery Pack Terminal 1 Voltage parameter. Each reading should be within 12 V of each other and DTC P0AF8 did not reset.

⇒ **If the parameters are not within 12 V of each other or the DTC is set**

Refer to the Battery Main Bus Diagnostics.

⇓ **If each reading is within 12 V of each other and DTC P0AF8 did not reset**

5. Vehicle OFF. Set the charge mode to Immediate. Plug in a known good charge cord. Verify the vehicle is in Charge Mode.
6. Observe the hybrid/EV powertrain control module Hybrid/EV Powertrain Control Module High Voltage Circuit parameter, hybrid/EV powertrain control module 2 Battery Charger High Output parameter and the battery energy control module Hybrid Battery Pack Terminal 1 Voltage parameter. Each reading should be within 12 V of each other and DTC P0AF8 did not reset.

⇒ **If the parameters are within 12 V of each other and the DTC is not set**

Refer to the Battery Charger Bus Diagnostics.

⇓ **If each reading is within 12 V of each other and DTC P0AF8 did not reset**

7. All OK.

Circuit/System Testing

Battery Charger Bus Diagnostics

Danger: Always perform the High Voltage Disabling procedure prior to servicing any High Voltage component or connection. Personal Protection Equipment (PPE) and proper procedures must be followed.

The High Voltage Disabling procedure will perform the following tasks:

- ***Identify how to disable high voltage.***
- ***Identify how to test for the presence of high voltage.***
- ***Identify condition under which high voltage is always present and personal protection equipment (PPE) and proper procedures must be followed.***

Failure to follow the procedures exactly as written may result in serious injury or death.

Note: The Battery Pack will utilize an exchange program. Please consult the most recent revision of bulletin/PI #PIP5112, available in Service Information (SI), for a list of approved Battery Pack service procedures. Components that may be removed and serviced without exchanging the complete battery pack are identified in the bulletin/PI. Please contact the GM Technical Assistance Center if you have any questions.

1. Vehicle OFF, disable the high voltage. Refer to *High Voltage Disabling on page 9-363*.
2. Disconnect the X2 harness connector at the A4 Hybrid/EV Battery Pack.
3. Disconnect the X4 connector at the T18 Battery Charger.
4. Test for infinite resistance between the high voltage DC positive terminal A and High voltage DC negative terminal B.

⇒ **If less than infinite resistance**

Replace the 300 V DC cables. After the repair is complete the scan tool *Clear Secured High Voltage DTCs on page 9-539* reset function must be performed.

⇓ **If infinite resistance**

5. Test for less than 10 Ω between the terminals listed below:
   - High voltage DC negative terminal B X4 harness connector at the T18 Battery Charger and the high voltage DC negative terminal B X2 harness connector at the A4 Hybrid/EV Battery Pack.
   - High voltage DC positive terminal A X4 harness connector at the T18 Battery Charger and the high voltage DC positive terminal A X2 harness connector at the A4 Hybrid/EV Battery Pack.

⇒ **If 10 Ω or greater**

Replace the 300V DCV cables. After the repair is complete the scan tool *Clear Secured High Voltage DTCs on page 9-539* reset function must be performed.

⇓ **If less than 10 Ω**

6. Replace the T18 Battery Charger.
7. Verify that DTC P0AF8 does not set while operating the vehicle within the Conditions for Running the DTC.

⇒ **If DTC P0AF8 does reset**

Replace the A28 Hybrid/EV Battery Contactor Assembly. After the repair is complete, with a scan tool, the *Clear Secured High Voltage DTCs on page 9-539* reset function must be performed.

⇓ **If DTC P0AF8 does not reset**

8. All OK.

Battery Main Bus Diagnostics

Danger: Always perform the High Voltage Disabling procedure prior to servicing any High Voltage component or connection. Personal Protection Equipment (PPE) and proper procedures must be followed.

The High Voltage Disabling procedure will perform the following tasks:

- ***Identify how to disable high voltage.***
- ***Identify how to test for the presence of high voltage.***
- ***Identify condition under which high voltage is always present and personal protection equipment (PPE) and proper procedures must be followed.***

Failure to follow the procedures exactly as written may result in serious injury or death.

Note: The Battery Pack will utilize an exchange program. Please consult the most recent revision of bulletin/PI #PIP5112, available in Service Information (SI), for a list of approved Battery Pack service procedures. Components that may be removed and serviced without exchanging the complete battery pack are identified in the bulletin/PI. Please contact the GM Technical Assistance Center if you have any questions.

1. Vehicle OFF, disable the high voltage. Refer to *High Voltage Disabling on page 9-363*.
2. Disconnect the X1 harness connector at the A4 Hybrid/EV Battery Pack.
3. Disconnect the X3 connector at the T6 Power Inverter Module.
4. Test for infinite resistance between the harness High voltage DC negative terminal A and High voltage DC positive terminal B.

⇒ **If less than infinite resistance**

Replace the 300 V DC cable. After the repair is complete, the scan tool *Clear Secured High Voltage DTCs on page 9-539* reset function must be performed.

⇓ **If infinite resistance**

5. Test for less than 10 Ω between the terminals listed below:
   - High voltage DC negative terminal B X3 harness connector at the T6 Power Inverter Module and the high voltage DC negative terminal B X1 harness connector at the A4 Hybrid/EV Battery Pack.
   - High voltage DC positive terminal A X3 harness connector at the T6 Power Inverter Module and the high voltage DC positive terminal A X1 harness connector at the A4 Hybrid/EV Battery Pack.

⇒ **If 10 Ω or greater**

Replace the 300V DCV cables. After the repair is complete, the scan tool *Clear Secured High Voltage DTCs on page 9-539* reset function must be performed.

⇓ **If less than 10 Ω**

6. Replace the T6 Power Inverter Module.
7. Verify that DTC P0AF8 does not set while operating the vehicle within the Conditions for Running the DTC.

⇒ **If DTC P0AF8 does reset**

Replace the A28 Hybrid/EV Battery Contactor Assembly. After the repair is complete, the scan tool *Clear Secured High Voltage DTCs on page 9-539* reset function must be performed.

⇓ **If DTC P0AF8 does not reset**

8. All OK.

Repair Instructions

Perform the *Diagnostic Repair Verification on page 6-123* after completing the repair.

- *300-Volt Battery Positive and Negative Cable Replacement (Drive Motor Generator Power Inverter Module to Drive Motor Battery) on page 9-454* or *300-Volt Battery Positive and Negative Cable Replacement (Drive Motor Generator Power Inverter Module to High Voltage Battery Disconnect Module) on page 9-457*
- *Drive Motor Generator Power Inverter Module Replacement on page 9-184* for T6 Power Inverter Module replacement.
- *Drive Motor Battery Charger Replacement on page 9-649* for T18 Battery Charger replacement.
- *Drive Motor Battery Positive High Voltage Contactor Relay Replacement on page 9-499* for A28 Hybrid/EV Battery Contactor Assembly replacement.
- *Control Module References on page 6-3* for battery energy control module and hybrid battery interface control modules replacement, programming and setup.

DTC P0AFA or P0AFB

Diagnostic Instructions

- Perform the *Diagnostic System Check - Vehicle on page 6-91* prior to using this diagnostic procedure.
- Review *Strategy Based Diagnosis on page 6-83* for an overview of the diagnostic approach.
- *Diagnostic Procedure Instructions on page 6-84* provides an overview of each diagnostic category.

DTC Descriptors

DTC P0AFA: Hybrid/EV Battery System Voltage Low Voltage

DTC P0AFB: Hybrid/EV Battery System Voltage High Voltage

Circuit/System Description

The hybrid/EV battery energy control module will diagnose its own systems and determine when a fault condition is present. Diagnostics and system status is communicated from the hybrid/EV battery energy control module to the hybrid/EV powertrain control module 2 through serial data. The hybrid/EV powertrain control module 2 is the host controller for diagnostic trouble code (DTC) information. The battery energy control module monitors the hybrid/EV battery voltage at the battery side of the high voltage main contactors.

Conditions for Running the DTC

- The battery energy control module is awake and communicating.
- None of the following DTCs are set; P0ABB, P0ABC, P0ABD, P0AF8, P0B3B, P0B3C, P0B3D, P0B3E, P0B40, P0B41, P0B42, P0B43, P0B45, P0B46, P0B47, P0B48, P0B4A, P0B4B, P0B4C, P0B4D, P0B4F, P0B50, P0B51, P0B52, P0B54, P0B55, P0B56, P0B57, P0B59, P0B5A, P0B5B, P0B5C, P0B5E, P0B5F, P0B60, P0B61, P0B63, P0B64, P0B65, P0B66, P0B68, P0B69, P0B6A, P0B6B, P0B6D, P0B6E, P0B6F, P0B70, P0B73, P0B74, P0B75, P0B77, P0B78, P0B79, P0B7A, P0B7C, P0B7D, P0B7E, P0B7F, P0B81, P0B82, P0B83, P0B84, P0B86, P0B87, P0B88, P0B89, P0B8B, P0B8C, P0B8D, P0B8E, P0B91, P0B93, P0B95, P0B96, P0B98, P0B92, P0B97, P0B9A, P0B9C, P0B9D, P0B9F, P0BA1, P0BA2, P0BA4, P0BA6, P0BA7, P0BA9, P0BAB, P0BAC, P0BAE, P0BB0, P0BB1, P0BB3, P0BB5, P0BB6, P0BB8, P0BBA, P0BBB, P1A07, P1B16, P1B17, P1B18, P1B19, P1B1A, P1B1B, P1B1C, P1B1D, P1B1E, P1B1F, P1B20, P1B21, P1B22, P1B23, P1B24, P1B25, P1B26, P1B27, P1B28, P1B29, P1B2A, P1B2B, P1B2C, P1B2D, P1B45, P1B46, P1B47, P1B48, P1B49, P1B4A, P1B4B, P1B4C, P1B4D, P1B4E, P1B4F, P1B50, P1B51, P1B52, P1B53, P1B54, P1B55, P1B56, P1B57, P1B58, P1B59, P1B5A, P1B5B, P1B5C, P1B5D, P1B5E, P1B5F, P1B60, P1B61, P1B62, P1B63, P1B64, P1B65, P1B66, P1B67, P1B68, P1B69, P1B6A, P1B6B, P1B6C, P1B6D, P1B6E, P1B6F, P1B70, P1B71, P1B72, P1B73, P1B74, P1B75, P1B76, P1B77, P1B78, P1B79, P1B7A, P1B7B, P1B7C, P1B7D, P1B7E, P1B7F, P1B80, P1B81, P1B82, P1B83, P1B84, P1B85, P1B86, P1B87, P1B88, P1B89, P1B8A, P1B8B, P1B8C, P1B8D, P1B8E, P1B8F, P1B90, P1B91, P1B92, P1B93, P1B94, P1B95, P1B96, P1B97, P1B98, P1B99, P1B9A, P1B9B, P1B9C, P1B9D, P1B9E, P1B9F, P1BA0, P1BA1, P1BA2, P1BA3, P1BA4, P1BA5, P1BA6, P1BA7, P1BA8, P1BA9, P1BAA, P1BAB, P1BAC, P1BAD, P1BAE, P1BAF, P1BB0, P1BB1, P1BB2, P1BB3, P1BB4, P1BB5, P1BB6, P1BB7, P1BB8, P1BB9, P1BBA, P1BBB, P1BBC, P1BBD, P1BBE, P1BBF, P1BC0, P1BC1, P1BC2, P1BC3, P1BC4, P1BC5, P1BC6, P1BC7, P1BC8, P1BC9, P1BCA, P1BCB, P1BCC, P1BCD, P1BCE, P1BCF, P1BD0, P1BD1, P1BD2, P1BD3, P1BD4, P1BD5, P1BD6, P1BD7, P1BD8, P1BD9, P1BDA, P1BDC, P1BDD, P1BDB, P1BDE, P1BDF, P1BE0, P1BE1, P1BE2, P1BE3, P1BE4, P1BE5, P1BE6, P1BE7, P1BE8, P1BE9, P1BEA, P1BEB, P1BEC, P1BED, P1BEE, P1BEF, P1BF0, P1BF1, P1BF2, P1BF3, P1BF4, P1BF5, P1BF6, P1BF7, P1BF8, P1BF9, P1BFA, P1BFB, P1BFC, P1BFD, P1BFE, P1E01, P1E02, P1E03, P1E04, P1E05, P1E06, P1E4C, P1E4D, P1E4E, P1E4F, P1E50, P1E51, P1E52, P1E53, P1E54, P1E56, P1E57, P1E58, P1E59, P1E5A, P1E5B, P1E5C, P1E5D, P1E5E, P1E5F, P1E60, P1E61, P1E62, P1E63, P1E64, P1E65, P1E66, P1E67, P1E68, P1E69, P1E6A, P1E6B, P1E6C, P1E6E, P1E6F, P1E70, P1E71, P1E72, P1E73, P1E74, P1E75, P1E76, P1E77, P1E78, P1E79, P1E7A, P1E7B, P1E7C, P1E7D, P1E7E, P1E7F, P1E80, P1E81, P1E82, P1E83, P1E84, P1E86, P1E87, P1E88, P1E89, P1E8A, P1E8E, P1E8F, P1E90, P1E91, P1E93, P1E94, P1E95, P1E96, P1E97, P1E99, P1E9A, P1E9B, P1E9C, P1E9D, P1E9F, P1EA0, P1EA1, P1EA2, P1EA3, P1EA5, P1EB1, P1EB5, P1F66, P1F67, P1F68, P1F69, P1F6A, P1F6B, P1F6C, P1F6D, P1F6E, P1F6F, P1F70, P1F71, P1F72, P1F73, P1F74, P1F75, P1F76, P1F77, P1F78, P1F79, P1F7A, P1F7B, P1F7C, P1F7D, P1F7E, P1F7F, P1F80, P1F81, P1F82, P1F83, P1F84, P1F85, P1F86, P1F87, P1F88, P1F89, P1F8A, P1F8B, P1F8C, P1F8D, P1F8E, P1F8F, P1F90, P1F91, P1F92, P1F93, P1F94, P1F95, U0111, U185A, U2401, U2603, U2604, U2605, or U2606.

Conditions for Setting the DTC

P0AFA

- The Hybrid Battery Pack Voltage is less than the following:
  - When the average battery temperature is −20°C or colder the voltage threshold is 158.50 V.
  - When the average battery temperature is −19°C to 0°C the voltage threshold is 164.90 V.
  - When the average battery temperature is >0°C the voltage threshold is 168.10 V.

  OR
- The Minimum Hybrid Battery Cell Group Voltage in the hybrid battery is less than the following:
  - When the average battery temperature is −20°C or colder the voltage threshold is 1.65 V.
  - When the average battery temperature is −19°C to 0°C the voltage threshold is 1.72 V.
  - When the average battery temperature is >0°C the voltage threshold is 1.75 V.

P0AFB

- The Hybrid Battery Pack Voltage is greater than the following:
  - When the average battery temperature is −30°C or colder the voltage threshold is 433.50 V.
  - When the average battery temperature is −29°C or warmer the voltage threshold is 438.30 V.

  OR
- The Maximum Hybrid Battery Cell Group Voltage in the hybrid battery is greater than the following:
  - When the average battery temperature is −30°C or colder the voltage threshold is 4.51 V.
  - When the average battery temperature is −29°C or warmer the voltage threshold is 4.56 V.

Action Taken When the DTC Sets

- DTCs P0AFA and P0AFB are type A DTCs.
- If any of these DTCs are set, the vehicle will operate in a reduced power mode.
- Once the vehicle has been turned OFF the contactors will be prevented from closing.

Conditions for Clearing the DTC

P0AFA and P0AFB

- DTCs P0AFA and P0AFB are type A DTCs.
- The *Clear Secured High Voltage DTCs on page 9-539* reset function must be performed with a scan tool before clear codes.

Diagnostic Aids

The hybrid/EV battery pack high voltage manual service disconnect not installed correctly, or a blown manual service disconnect fuse will cause P0AFA to set.

Reference Information

Schematic Reference

Hybrid/EV Energy Storage Schematics on page 9-348

Connector End View Reference

Component Connector End Views on page 11-455

Description and Operation

Drive Motor Battery System Description on page 9-545

Electrical Information Reference

- *Circuit Testing on page 11-871*
- *Connector Repairs on page 11-895*
- *Testing for Intermittent Conditions and Poor Connections on page 11-877*
- *Wiring Repairs on page 11-883*

DTC Type Reference

Powertrain Diagnostic Trouble Code (DTC) Type Definitions on page 6-92

Scan Tool Reference

Control Module References on page 6-3 for scan tool information

Special Tools

- *EL-48571* High Voltage Battery Pin Out Box
- *EL-48571–50* High Voltage Battery Pin Out Box Cable
- *EL-48900* HEV Safety Kit

For equivalent regional tools, refer to *Special Tools on page 9-549*.

Circuit/System Verification

1. Vehicle in Service Mode.
2. Verify that DTC P0ABB, P0ABC, P0ABD, P0AF8, P0B3B, P0B3C, P0B3D, P0B3E, P0B40, P0B41, P0B42, P0B43, P0B45, P0B46, P0B47, P0B48, P0B4A, P0B4B, P0B4C, P0B4D, P0B4F, P0B50, P0B51, P0B52, P0B54, P0B55, P0B56, P0B57, P0B59, P0B5A, P0B5B, P0B5C, P0B5E, P0B5F, P0B60, P0B61, P0B63, P0B64, P0B65, P0B66, P0B68, P0B69, P0B6A, P0B6B, P0B6D, P0B6E, P0B6F, P0B70, P0B73, P0B74, P0B75, P0B77, P0B78, P0B79, P0B7A, P0B7C, P0B7D, P0B7E, P0B7F, P0B81, P0B82, P0B83, P0B84, P0B86, P0B87, P0B88, P0B89, P0B8B, P0B8C, P0B8D, P0B8E, P0B91, P0B93, P0B95, P0B96, P0B98, P0B92, P0B97, P0B9A, P0B9C, P0B9D, P0B9F, P0BA1, P0BA2, P0BA4, P0BA6, P0BA7, P0BA9, P0BAB, P0BAC, P0BAE, P0BB0, P0BB1, P0BB3, P0BB5, P0BB6, P0BB8, P0BBA, P0BBB, P1A07, P1B16, P1B17, P1B18, P1B19, P1B1A, P1B1B, P1B1C, P1B1D, P1B1E, P1B1F, P1B20, P1B21, P1B22, P1B23, P1B24, P1B25, P1B26, P1B27, P1B28, P1B29, P1B2A, P1B2B, P1B2C, P1B2D, P1B45, P1B46, P1B47, P1B48, P1B49, P1B4A, P1B4B, P1B4C, P1B4D, P1B4E, P1B4F, P1B50, P1B51, P1B52, P1B53, P1B54, P1B55, P1B56, P1B57, P1B58, P1B59, P1B5A, P1B5B, P1B5C, P1B5D, P1B5E, P1B5F, P1B60, P1B61, P1B62, P1B63, P1B64, P1B65, P1B66, P1B67, P1B68, P1B69, P1B6A, P1B6B, P1B6C, P1B6D, P1B6E, P1B6F, P1B70, P1B71, P1B72, P1B73, P1B74, P1B75, P1B76, P1B77, P1B78, P1B79, P1B7A, P1B7B, P1B7C, P1B7D, P1B7E, P1B7F, P1B80, P1B81, P1B82, P1B83, P1B84, P1B85, P1B86,

P1B87, P1B88, P1B89, P1B8A, P1B8B, P1B8C, P1B8D, P1B8E, P1B8F, P1B90, P1B91, P1B92, P1B93, P1B94, P1B95, P1B96, P1B97, P1B98, P1B99, P1B9A, P1B9B, P1B9C, P1B9D, P1B9E, P1B9F, P1BA0, P1BA1, P1BA2, P1BA3, P1BA4, P1BA5, P1BA6, P1BA7, P1BA8, P1BA9, P1BAA, P1BAB, P1BAC, P1BAD, P1BAE, P1BAF, P1BB0, P1BB1, P1BB2, P1BB3, P1BB4, P1BB5, P1BB6, P1BB7, P1BB8, P1BB9, P1BBA, P1BBB, P1BBC, P1BBD, P1BBE, P1BBF, P1BC0, P1BC1, P1BC2, P1BC3, P1BC4, P1BC5, P1BC6, P1BC7, P1BC8, P1BC9, P1BCA, P1BCB, P1BCC, P1BCD, P1BCE, P1BCF, P1BD0, P1BD1, P1BD2, P1BD3, P1BD4, P1BD5, P1BD6, P1BD7, P1BD8, P1BD9, P1BDA, P1BDC, P1BDD, P1BDB, P1BDE, P1BDF, P1BE0, P1BE1, P1BE2, P1BE3, P1BE4, P1BE5, P1BE6, P1BE7, P1BE8, P1BE9, P1BEA, P1BEB, P1BEC, P1BED, P1BEE, P1BEF, P1BF0, P1BF1, P1BF2, P1BF3, P1BF4, P1BF5, P1BF6, P1BF7, P1BF8, P1BF9, P1BFA, P1BFB, P1BFC, P1BFD, P1BFE, P1E01, P1E02, P1E03, P1E04, P1E05, P1E06, P1E4C, P1E4D, P1E4E, P1E4F, P1E50, P1E51, P1E52, P1E53, P1E54, P1E56, P1E57, P1E58, P1E59, P1E5A, P1E5B, P1E5C, P1E5D, P1E5E, P1E5F, P1E60, P1E61, P1E62, P1E63, P1E64, P1E65, P1E66, P1E67, P1E68, P1E69, P1E6A, P1E6B, P1E6C, P1E6E, P1E6F, P1E70, P1E71, P1E72, P1E73, P1E74, P1E75, P1E76, P1E77, P1E78, P1E79, P1E7A, P1E7B, P1E7C, P1E7D, P1E7E, P1E7F, P1E80, P1E81, P1E82, P1E83, P1E84, P1E86, P1E87, P1E88, P1E89, P1E8A, P1E8E, P1E8F, P1E90, P1E91, P1E93, P1E94, P1E95, P1E96, P1E97, P1E99, P1E9A, P1E9B, P1E9C, P1E9D, P1E9F, P1EA0, P1EA1, P1EA2, P1EA3, P1EA5, P1EB1, P1EB5, P1F66, P1F67, P1F68, P1F69, P1F6A, P1F6B, P1F6C, P1F6D, P1F6E, P1F6F, P1F70, P1F71, P1F72, P1F73, P1F74, P1F75, P1F76, P1F77, P1F78, P1F79, P1F7A, P1F7B, P1F7C, P1F7D, P1F7E, P1F7F, P1F80, P1F81, P1F82, P1F83, P1F84, P1F85, P1F86, P1F87, P1F88, P1F89, P1F8A, P1F8B, P1F8C, P1F8D, P1F8E, P1F8F, P1F90, P1F91, P1F92, P1F93, P1F94, P1F95, U0111, U185A, U2401, U2603, U2604, U2605, or U2606 is not set.

⇒ **If any of the DTCs are set**

Refer to *Diagnostic Trouble Code (DTC) List - Vehicle on page 6-92*.

⇓ **If none of the DTCs are set**

3. Verify the scan tool Hybrid Battery Pack Terminal 1 Voltage parameter is between 158.50–438.30 V.

⇒ **If the parameter is not within the specified range**

Refer to Hybrid Battery Pack Voltage Diagnosis.

⇓ **If the parameter is within the specified range**

4. Observe the scan tool Hybrid Battery 1–96 voltage parameters. Each reading should be between 1.65–4.56 V and all readings should be within 0.06 V of each other.

⇒ **If the voltage readings are not within the specified range**

Refer to Hybrid Battery 1–96 Cell Group Diagnosis.

⇓ **If the voltage readings are within the specified range**

5. All OK.

Circuit/System Testing

Danger: Always perform the High Voltage Disabling procedure prior to servicing any High Voltage component or connection. Personal Protection Equipment (PPE) and proper procedures must be followed.

The High Voltage Disabling procedure will perform the following tasks:

- ***Identify how to disable high voltage.***
- ***Identify how to test for the presence of high voltage.***
- ***Identify condition under which high voltage is always present and personal protection equipment (PPE) and proper procedures must be followed.***

Failure to follow the procedures exactly as written may result in serious injury or death.

Hybrid Battery Pack Voltage Diagnosis

Note: The Battery Pack will utilize an exchange program. Please consult the most recent revision of bulletin/PI #PIP5112, available in Service Information (SI), for a list of approved Battery Pack service procedures. Components that may be removed and serviced without exchanging the complete battery pack are identified in the bulletin/PI. Please contact the GM Technical Assistance Center if you have any questions.

1. Vehicle OFF, disable the high voltage. Refer to *High Voltage Disabling on page 9-363*.
2. Remove the A4 Hybrid/EV Battery Pack cover. Refer to *Drive Motor Battery Cover Replacement on page 9-449*
3. Install a known good S15 Manual Service Disconnect.

   Note: Wear your High Voltage Insulation gloves until you have determined that a high voltage exposure risk is no longer present.

4. Test for 158.50–438.30 V between the ground terminal C4A Hybrid/EV Battery Section 1 and B+ C4F Hybrid/EV Battery Section 6.

⇒ **If not within the specified range**

Replace the A4 Hybrid/EV Battery Pack.

⇓ **If within the specified range**

5. Replace the K16 Battery Energy Control Module. After the repair is complete with a scan tool, the *Clear Secured High Voltage DTCs on page 9-539* reset function must be performed.

Hybrid Battery 1–96 Cell Group Diagnosis

Note: The Battery Pack will utilize an exchange program. Please consult the most recent revision of bulletin/PI #PIP5112, available in Service Information (SI), for a list of approved Battery Pack service procedures. Components that may be removed and serviced without exchanging the complete battery pack are identified in the bulletin/PI. Please contact the GM Technical Assistance Center if you have any questions.

1. Vehicle OFF, disable the high voltage. Refer to *High Voltage Disabling on page 9-363*.
2. Remove the A4 Hybrid/EV Battery Pack cover. Refer to *Drive Motor Battery Cover Replacement on page 9-449*

   Note: Do not leave the EL-48571 connected to the hybrid/EV battery section harness or leave the hybrid/EV battery section harness disconnected for more than one hour. Leaving the EL-48571 connected to the hybrid/EV battery section harness or leaving the hybrid/EV battery section harness disconnected for more than one hour will result in an unrecoverable, unbalanced hybrid/EV battery section.
3. Disconnect the harness connector at the appropriate C4 Hybrid/EV Battery Section harness connector.
4. Connect the *EL-48571* High Voltage Battery Pin Out Box.
5. Insert the DMM probes into the EL-48571 test cavities.
6. Measure and record the voltage of each of the cell groups by cycling the EL-48571 through each of the switch positions. Refer to *EL-48571 High Voltage Battery Pin Out Box Reference on page 9-368*
7. Each cell group voltage reading should be between 1.65–4.56 V.

⇒ **If not within the specified range**

Replace the appropriate C4 Hybrid/EV Battery section. After the repair is complete with a scan tool, the *Clear Secured High Voltage DTCs on page 9-539* reset function must be performed.

⇓ **If within the specified range**

8. Each cell group voltage reading should be within 0.06 V of each other.

⇒ **If greater than 0.06 V between cell groups**

Replace the appropriate C4 Hybrid/EV Battery section. After the repair is complete with a scan tool, the *Clear Secured High Voltage DTCs on page 9-539* reset function must be performed.

⇓ **If less than 0.06 V between cell groups**

9. For Hybrid/EV Battery Section 1–5, replace the K16 Battery Energy Control Module.

   For Hybrid/EV Battery Section 6, replace the K112 Hybrid/EV Battery Interface Control Module.

   After the repair is complete with a scan tool, the *Clear Secured High Voltage DTCs on page 9-539* reset function must be performed.

Repair Instructions

Perform the *Diagnostic Repair Verification on page 6-123* after completing the repair.

- *High Voltage Battery Interface Control Module Replacement on page 9-512*
- *Drive Motor Battery Replacement and Shipping Preparation on page 9-524*
- *Control Module References on page 6-3* for battery energy control module and hybrid interface control battery modules replacement, programming and setup.

DTC P0B10, P0B11, or P0B13

Diagnostic Instructions

- Perform the *Diagnostic System Check - Vehicle on page 6-91* prior to using this diagnostic procedure.
- Review *Strategy Based Diagnosis on page 6-83* for an overview of the diagnostic approach.
- *Diagnostic Procedure Instructions on page 6-84* provides an overview of each diagnostic category.

DTC Descriptors

DTC P0B10: Hybrid/EV Battery High Resolution Current Sensor Circuit Low Voltage
DTC P0B11: Hybrid/EV Battery High Resolution Current Sensor Circuit High Voltage
DTC P0B13: Hybrid/EV Battery High Resolution Current Sensor Circuit High Voltage

Circuit/System Description

The hybrid/EV battery current sensor is mounted inside the hybrid/EV battery pack. The positive high voltage cable that goes to the positive contactor relay passes through the hybrid/EV battery pack current sensor. The hybrid/EV battery pack current sensor detects the amperage that flows in and out of the hybrid/EV batteries. The battery energy control module supplies and monitors a 5 V reference signal to the hybrid/EV battery pack current sensor. The hybrid/EV battery pack current sensor returns a signal between 0 and 5 V to the battery energy control module. The hybrid/EV battery pack current sensor signal is in proportion to the amperage going in and out of the hybrid/EV battery pack. A signal voltage of the hybrid/EV battery pack current sensor greater than 2.5 V indicates that the hybrid/EV battery is being charged and a signal voltage less than 2.5 V indicates discharging. The hybrid/EV battery current sensor measures from -470 to +280 A.

Conditions for Running the DTC

P0B10 or P0B11

- The 12 V battery voltage is greater than or equal to 9 V.
- The battery energy control module is awake and communicating.

P0B13

- The 12 V battery voltage is greater than or equal to 9 V.
- The fine or course current measured is between −20A and 20A.
- The battery energy control module is awake and communicating.
- DTC P0AC1, P0AC2, P1EBA, P1A07, P0B10, P0B11, P1EBB, U0111, or U185A is not set.

Conditions for Setting the DTC

P0B10

The battery energy control module detects that the hybrid/EV battery pack current is less than −23 A.

P0B11

The battery energy control module detects that the hybrid/EV battery pack current is greater than +23A.

P0B13

The difference between the fine and course measurement is greater than 10A.

Action Taken When the DTC Sets

- P0B10, P0B11, or P0B13 are type A DTCs.
- The driver information center (DIC) displays the SERVICE HYBRID SYSTEM message.
- If any of these DTCs are set, the vehicle will operate in a reduced power mode.
- The contactors may open at any time.

Conditions for Clearing the DTC

P0B10, P0B11, or P0B13 are type A DTCs.

Reference Information

Schematic Reference

Hybrid/EV Energy Storage Schematics on page 9-348

Connector End View Reference

Component Connector End Views on page 11-455

Description and Operation

Drive Motor Battery System Description on page 9-545

Electrical Information Reference

- *Circuit Testing on page 11-871*
- *Connector Repairs on page 11-895*
- *Testing for Intermittent Conditions and Poor Connections on page 11-877*
- *Wiring Repairs on page 11-883*

DTC Type Reference

Powertrain Diagnostic Trouble Code (DTC) Type Definitions on page 6-92

Scan Tool Reference

Control Module References on page 6-3 for scan tool information

Special Tools

- *EL-48900* HEV Safety Kit
- *EL-51099* Low Voltage Test Harness

For equivalent regional tools, refer to *Special Tools on page 9-549*.

Circuit/System Verification

Note: The Battery Pack will utilize an exchange program. Please consult the most recent revision of bulletin/PI #PIP5112, available in Service Information (SI), for a list of approved Battery Pack service procedures. Components that may be removed and serviced without exchanging the complete battery pack are identified in the bulletin/PI. Please contact the GM Technical Assistance Center if you have any questions.

1. Vehicle in Service Mode.

   Note: Typical current sensor reading in a parked vehicle with the Vehicle in Service Mode and all accessories OFF, is between 1 and 10 A.

2. Observe the scan tool Hybrid/EV Battery Pack Low Resolution Current Sensor and Hybrid/EV Battery Pack High Resolution Current Sensor parameters. The readings should be between −23 and +23 A, not differ by greater than 10 A, and change with the amount of current draw on the hybrid/EV battery pack.

⇒ **If not between −23 and +23 A**

Refer to Circuit/System Testing.

⇓ **If within the specified range**

3. All OK.

Circuit/System Testing

Danger: Always perform the High Voltage Disabling procedure prior to servicing any High Voltage component or connection. Personal Protection Equipment (PPE) and proper procedures must be followed.

The High Voltage Disabling procedure will perform the following tasks:

- ***Identify how to disable high voltage.***
- ***Identify how to test for the presence of high voltage.***
- ***Identify condition under which high voltage is always present and personal protection equipment (PPE) and proper procedures must be followed.***

Failure to follow the procedures exactly as written may result in serious injury or death.

1. Vehicle OFF, disable the high voltage at the A4 Hybrid/EV Battery Pack. Refer to *High Voltage Disabling on page 9-363*.
2. Remove the A4 Hybrid/EV Battery Pack cover. Refer to *Drive Motor Battery Cover Replacement on page 9-449*.
3. Connect the *EL-51099* test harness. Disconnect the harness connector at the B30 Hybrid/EV Battery Pack Current Sensor.
4. Connect the 12 V battery, vehicle OFF.
5. Test for less than 10 Ω between the low reference circuit terminal C and ground.

⇒ **If 10 Ω or greater**

5.1. Vehicle OFF.

5.2. Test for less than 2 Ω in the low reference circuit end to end.

⇒ If 2 Ω or greater, repair the open/high resistance in the circuit.

⇒ If less than 2 Ω, replace the K16 Battery Energy Control Module.

⇓ **If less than 10 Ω**

6. Vehicle in Service Mode.
7. Test for 4.8–5.5 V between the 5 V reference circuit terminal B and ground.

⇒ **If less than 4.8 V**

7.1. Vehicle OFF, disconnect the X2 harness connector at the K16 Battery Energy Control Module.

7.2. Test for infinite resistance between the 5 V reference circuit and ground.

⇒ If less than infinite resistance, repair the short to ground on the circuit.

⇓ If infinite resistance

7.3. Test for less than 2 Ω in the 5 V reference circuit end to end.

⇒ If 2 Ω or greater, repair the open/high resistance in the circuit.

⇒ If less than 2 Ω, replace the K16 Battery Energy Control Module.

⇒ **If greater than 5.5 V**

7.1. Vehicle OFF, disconnect the X2 harness connector at the K16 Battery Energy Control Module, vehicle in Service Mode.

7.2. Test for less than 1 V between the 5 V reference circuit and ground.

⇒ If 1 V or greater, repair the short to voltage on the circuit.

⇒ If less than 1 V, replace the K16 Battery Energy Control Module.

⇓ **If within the specified range**

8. Verify the scan tool Hybrid/EV Battery Pack High Resolution Current Sensor parameter is less than 0 A.

⇒ **If 0 A or greater**

8.1. Vehicle OFF, disconnect the X2 harness connector at the K16 Battery Energy Control Module, vehicle in Service Mode.

8.2. Test for less than 1 V between the 5 V reference circuit and ground.

⇒ If 1 V or greater, repair the short to voltage on the circuit.

⇒ If less than 1 V, replace the K16 Battery Energy Control Module.

⇓ **If less than 0 A**

9. Install a 3 A fused jumper wire between the signal circuit terminal D and the 5 V reference circuit terminal B.

10. Verify the scan tool Hybrid/EV Battery Pack High Resolution Current Sensor parameter is greater than 0 A.

⇓ **If 0 A or less**

10.1. Vehicle OFF, disconnect the X2 harness connector at the K16 Battery Energy Control Module.

10.2. Test for infinite resistance between the signal circuit and ground.

⇒ If less than infinite resistance, repair the short to ground on the circuit.

⇓ If infinite resistance

10.3. Test for less than 2 Ω in the signal circuit end to end.

⇒ If 2 Ω or greater, repair the open/high resistance in the circuit.

⇒ If less than 2 Ω, replace the K16 Battery Energy Control Module.

⇓ **If greater than 0 A**

11. Verify the scan tool Hybrid/EV Battery Pack Low Resolution Current Sensor parameter is less than 100 A.

⇒ **If 100 A or greater**

11.1. Vehicle OFF, disconnect the X2 harness connector at the K16 Battery Energy Control Module, vehicle in Service Mode.

11.2. Test for less than 1 V between the signal circuit and ground.

⇒ If 1 V or greater, repair the short to voltage on the circuit.

⇒ If less than 1 V, replace the K16 Battery Energy Control Module.

⇓ **If less than 100 A**

12. Install a 3 A fused jumper wire between the signal circuit terminal A and the 5 V reference circuit terminal B.

13. Verify with a scan tool, the Hybrid/EV Battery Pack Low Resolution Current Sensor parameter is greater than 100 A.

⇓ **If less than 100 A**

13.1. Vehicle OFF, disconnect the X2 harness connector at the K16 Battery Energy Control Module.

13.2. Test for infinite resistance between the signal circuit and ground.

⇒ If less than infinite resistance, repair the short to ground on the circuit.

⇓ If infinite resistance

13.3. Test for less than 2 Ω in the signal circuit end to end.

⇒ If 2 Ω or greater, repair the open/high resistance in the circuit.

⇒ If less than 2 Ω, replace the K16 Battery Energy Control Module.

⇓ **If 100 A or greater**

14. Replace the B30 Hybrid/EV Battery Pack Current Sensor.

Repair Instructions

Perform the *Diagnostic Repair Verification on page 6-123* after completing the repair.

- *Drive Motor Battery Current Sensor Replacement on page 9-497*
- *Control Module References on page 6-3* for K16 Battery Energy Control Module replacement, programming and setup.

DTC P0B3B-P0BBB, P1B16-P1B2D, P1B45-P1BFE, P1E01-P1E06, or P1E4C-P1E8B

Diagnostic Instructions

- Perform the *Diagnostic System Check - Vehicle on page 6-91* prior to using this diagnostic procedure.
- Review *Strategy Based Diagnosis on page 6-83* for an overview of the diagnostic approach.
- *Diagnostic Procedure Instructions on page 6-84* provides an overview of each diagnostic category.

DTC Descriptors

DTC P0B3B, P0B40, P0B45, P0B4A, P0B4F, P0B54, P0B59, P0B5E, P0B63, P0B68, P0B6D, P0B72, P0B77, P0B7C, P0B81, P0B86, P0B8B, P0B90, P0B95, P0B9A, P0B9F, P0BA4, P0BA9, P0BAE, P0BB3, P0BB8, P1B28, P1B29, P1B2A, P1B2B, P1B2C, P1B2D, P1E4C, P1E4D, P1E4E, P1E4F, P1E50, P1E51, P1E52, P1E53, P1E54, P1E55, P1E56, P1E57, P1E58, P1E59, P1E5A, P1E5B, P1E5C, P1E5D, P1E5E, P1E5F, P1E60, P1E61, P1E62, P1E63, P1E64, P1E65, P1E66, P1E67, P1E68, P1E69, P1E6A, P1E6B, P1E6C, P1E6D, P1E6E, P1E6F, P1E70, P1E71, P1E72, P1E73, P1E74, P1E75, P1E76, P1E77, P1E78, P1E79, P1E7A, P1E7B, P1E7C, P1E7D, P1E7E, P1E7F, P1E80, P1E81, P1E82, P1E83, P1E84, P1E85, P1E86, P1E87, P1E88, P1E89, P1E8A, and P1E8B: Hybrid/EV Battery 1-96 Circuit

DTC P0B3C, P0B41, P0B46, P0B4B, P0B50, P0B55, P0B5A, P0B5F, P0B64, P0B69, P0B6E, P0B73, P0B78, P0B7D, P0B82, P0B87, P0B8C, P0B91, P0B96, P0B9B, P0BA0, P0BA5, P0BAA, P0BAF, P0BB4, P0BB9, P1B19, P1B1F, P1B25, P1B45, P1B48, P1B4B, P1B4E, P1B51, P1B54, P1B57, P1B5A, P1B5D, P1B60, P1B63, P1B66, P1B69, P1B6C, P1B6F, P1B72, P1B75, P1B78, P1B7B, P1B7E, P1B81, P1B84, P1B87, P1B8A, P1B8D, P1B90, P1B93, P1B96, P1B99, P1B9C, P1B9F, P1BA2, P1BA5, P1BA8, P1BAB, P1BAE, P1BB1, P1BB4, P1BB7, P1BBA, P1BBD, P1BC0, P1BC3, P1BC6, P1BC9, P1BCC, P1BCF, P1BD2, P1BD5, P1BD8, P1BDB, P1BDE, P1BE1, P1BE4, P1BE7, P1BEA, P1BED, P1BF0, P1BF3, P1BF6, P1BF9, P1BFC, P1E01, and P1E04: Hybrid/EV Battery 1-96 Circuit Performance

DTC P0B3D, P0B42, P0B47, P0B4C, P0B51, P0B56, P0B5B, P0B60, P0B65, P0B6A, P0B6F, P0B74, P0B79, P0B7E, P0B83, P0B88, P0B8D, P0B92, P0B97, P0B9C, P0BA1, P0BA6, P0BAB, P0BB0, P0BB5, P0BBA, P1B17, P1B1A, P1B1D, P1B20, P1B23, P1B26, P1B46, P1B4C, P1B4F, P1B52, P1B55, P1B58, P1B5B, P1B5E, P1B61, P1B64, P1B67, P1B6A, P1B6D, P1B70, P1B73, P1B76, P1B79, P1B7C, P1B7F, P1B82, P1B85, P1B88, P1B8B, P1B8E, P1B91, P1B94, P1B97, P1B9A, P1B9D, P1BA0, P1BA3, P1BA6, P1BA9, P1BAC, P1BAF, P1BB2, P1BB5, P1BB8, P1BBB, P1BBE, P1BC1, P1BC4, P1BC7, P1BCA, P1BCD, P1BD0, P1BD3, P1BD6, P1BD9, P1BDC, P1BDF, P1BE2, P1BE5, P1BE8, P1BEB, P1BEE, P1BF1, P1BF4, P1BF7, P1BFA, P1BFD, P1E02, and P1E05: Hybrid/EV Battery 1-96 Low Voltage

DTC P0B3E, P0B43, P0B48, P0B4D, P0B52, P0B57, P0B5C, P0B61, P0B66, P0B6B, P0B70, P0B75, P0B7A, P0B7F, P0B84, P0B89, P0B8E, P0B93, P0B98, P0B9D, P0BA2, P0BA7, P0BAC, P0BB1, P0BB6, P0BBB, P1B18, P1B1B, P1B1E, P1B21, P1B24, P1B27, P1B47, P1B4A, P1B4D, P1B50, P1B53, P1B56, P1B59, P1B5C, P1B5F, P1B62, P1B65, P1B68, P1B6B, P1B6E, P1B71, P1B74, P1B77, P1B7A, P1B7D, P1B80, P1B83, P1B86, P1B89, P1B8C, P1B8F, P1B92, P1B95, P1B98, P1B9B, P1B9E, P1BA1, P1BA4, P1BA7, P1BAA, P1BAD, P1BB0, P1BB3, P1BB6, P1BB9, P1BBC, P1BBF, P1BC2, P1BC5, P1BC8, P1BCB, P1BCE, P1BD1, P1BD4, P1BD7, P1BDA, P1BDD, P1BE0, P1BE3, P1BE6, P1BE6, P1BE9, P1BEC, P1BEF, P1BF2, P1BF5, P1BF8, P1BFB, P1BFE, P1E03, and P1E06: Hybrid/EV Battery 1-96 High Voltage

Circuit/System Description

The hybrid battery contains 192 cells. Groups of two cells are welded together in parallel. There are a total of 96 cell groups in the hybrid battery assembly. These cell groups are electrically connected in series. Each individual cell group is rated at 3.78 V for a nominal system voltage of 363 V direct current when the high voltage battery is at 50% state of charge. Cell voltage will range from 2.7 V to 4.15 V under normal temperatures and not under load. There are 16 cell groups in each battery section. The battery cell groups are joined to form 6 equal sections.

The battery energy control module monitors the voltage of the 96 battery cell groups through 12 hybrid battery interface control modules. The battery energy control module contains 10 of the 12 hybrid battery interface control modules. The hybrid battery interface control module attached to the side of section 6 contains the remaining hybrid battery interface control modules.

Two voltage sense lines are connected to each individual cell group, and these sense lines terminate at connectors located at the end of the battery section. Each connector has 16 voltage sense lines. A high voltage measuring harness connects the hybrid battery interface control module and the battery energy control module, to their respective battery sections. The hybrid battery interface control module encodes the voltage reading for the 16 individual cell groups in battery section 6 and transmits it to the battery energy control module. The hybrid/EV battery energy control module monitors and compares each of the 16 individual cell groups and the sum of the 16 cell total. The hybrid/EV

battery interface control modules, hybrid/EV battery energy control module and measuring harness are all serviceable components.

The hybrid/EV battery energy control module will diagnose its own systems and determine when a fault condition is present. Diagnostics and system status is communicated from the hybrid/EV battery energy control module to the hybrid/EV powertrain control module 2 through serial data. The hybrid/EV powertrain control module 2 is the host controller for diagnostic trouble code (DTC) information.

Conditions for Running the DTC

Hybrid/EV Battery 1-96 Circuit DTCs

All of the following conditions exist:

- Vehicle in Service Mode or Vehicle ON.
- The hybrid/EV battery energy control module is communicating.
- None of the following DTCs are set; P1E8E, P1E94, P1E9A, P1EA0, P1FBD, P1FBE, P1FBF, P1FC0, U2603, U2604, U2605, U2606, U2617, U2618, U2619, or U2620.

Hybrid/EV Battery 1-96 Circuit Performance DTCs

All of the following conditions exist:

- Vehicle ON.
- The average cell voltage change is greater than 0.006 V.
- None of the Hybrid/EV Battery 1-96 Circuit, U2401, or U2603-U2606 DTCs are set.

Hybrid/EV Battery 1-96 Circuit Low Voltage DTCs

All of the following conditions exist:

- Vehicle in Service Mode or Vehicle ON.
- The hybrid/EV battery energy control module is awake and communicating.
- None of the Hybrid/EV Battery 1-96 Circuit, U2603, U2604, U2605, U2606, U2617, U2618, U2619, or U2620 DTCs are set.

Hybrid/EV Battery 1-96 Circuit High Voltage DTCs

All of the following conditions exist:

- Vehicle in Service Mode or Vehicle ON.
- The hybrid/EV battery energy control module is awake and communicating.
- None of the Hybrid/EV Circuit, DTCs are set.
- DTC U2603, U2604, U2605, U2606, U2617, U2618, U2619, or U2620 is not set.

Conditions for Setting the DTC

Hybrid/EV Battery 1-96 Circuit DTCs

- Hybrid/EV Battery 1-96 Circuit are type A DTCs.
- The hybrid/EV battery energy control module detects cell voltage greater than 0.4 V.

Hybrid/EV Battery 1-96 Circuit Performance DTCs

- Hybrid/EV Battery 1-96 Circuit Performance are type A DTCs.
- A faulted cell group voltage does not match the average cell voltage change.

Hybrid/EV Battery 1-96 Circuit Low Voltage DTCs

- Hybrid/EV Battery 1-96 Circuit Low Voltage are type A DTCs.
- Any hybrid/EV battery voltage signal is less than or equal to 0.2 V.

Hybrid/EV Battery 1-96 Circuit High Voltage DTCs

- Hybrid/EV Battery 1-96 Circuit High Voltage are type A DTCs.
- Any hybrid/EV battery voltage signal is greater than or equal to 4.8 V for 1.4 s.

Action Taken When the DTC Sets

- DTC P0B3B-P0BBB, P1B16-P1B2D, P1B45-P1BFE, P1E01-P1E06, or P1E4C-P1E8B are type A DTCs.
- If any of these DTCs are set, PROPULSION POWER IS REDUCED message will be display on the driver information center and the vehicle will operate in a reduced power mode.
- If additional fault conditions occur, this may cause the contactors to open at anytime.

Conditions for Clearing the DTC

- DTC P0B3B-P0BBB, P1B16-P1B2D, P1B45-P1BFE, P1E01-P1E06, or P1E4C-P1E8B are type A DTCs.
- No hybrid/EV battery voltage signal is less than or equal to 0.2 V or greater than or equal to 4.8 V.
- Vehicle must be cycled from ON to OFF.

Diagnostic Aids

Caution: The battery energy control modules internal cell balancing circuitry is powered by the cell group voltage sense circuits. In order to prevent an unrecoverable, unbalanced Hybrid/EV battery section or internal control module damage, always take the following actions:

1. Disconnect ALL of the battery energy control module connectors prior to disconnecting any Hybrid/EV battery section connector.
2. Reconnect all the Hybrid/EV battery section connectors prior to reconnecting the battery energy control module connectors.
3. Disconnect and reconnect the battery energy control module connectors ONLY in the sequence provided in Repair Instructions.

The Hybrid/EV Battery Section schematics in Energy Storage identify the battery section and voltage sense circuit terminal locations appropriate to each cell group and corresponding DTC.

Reference Information

Schematic Reference

Hybrid/EV Energy Storage Schematics on page 9-348

Connector End View Reference

Component Connector End Views on page 11-455

Description and Operation

Drive Motor Battery System Description on page 9-545

Electrical Information Reference

- *Circuit Testing on page 11-871*
- *Connector Repairs on page 11-895*
- *Testing for Intermittent Conditions and Poor Connections on page 11-877*
- *Wiring Repairs on page 11-883*

DTC Type Reference

Powertrain Diagnostic Trouble Code (DTC) Type Definitions on page 6-92

Scan Tool Reference

Control Module References on page 6-3 for scan tool information

Special Tools

- *EL-48571* High Voltage Battery Pin Out Box
- *EL-48571-50* High Voltage Battery Pin Out Box Cable
- *EL-48900* HEV Safety Kit

For equivalent regional tools, refer to *Special Tools on page 9-549*.

Circuit/System Verification

1. Vehicle in Service Mode.
2. Verify the scan tool Hybrid/EV Battery 1-96 parameters. Each reading should be between 2.5–4.7 V, and all readings should be within 0.05 V of each other.

⇒ **If any are not between 2.5–4.7 V or not within 0.05 V of each other**

Refer to Circuit/System Testing.

⇓ **If all readings are between 2.5–4.7 V and within 0.05 V of each other**

3. All OK.

Circuit/System Testing

Danger: Always perform the High Voltage Disabling procedure prior to servicing any High Voltage component or connection. Personal Protection Equipment (PPE) and proper procedures must be followed.

The High Voltage Disabling procedure will perform the following tasks:

- ***Identify how to disable high voltage.***
- ***Identify how to test for the presence of high voltage.***
- ***Identify condition under which high voltage is always present and personal protection equipment (PPE) and proper procedures must be followed.***

Failure to follow the procedures exactly as written may result in serious injury or death.

Note: The Battery Pack will utilize an exchange program. Please consult the most recent revision of bulletin/PI #PIP5112, available in Service Information (SI), for a list of approved Battery Pack service procedures. Components that may be removed and serviced without exchanging the complete battery pack are identified in the bulletin/PI. Please contact the GM Technical Assistance Center if you have any questions.

1. Vehicle OFF, disable high voltage. Refer to *High Voltage Disabling on page 9-363*.
2. Remove the A4 Hybrid/EV Battery Pack cover. Refer to *Drive Motor Battery Cover Replacement on page 9-449*.

Caution: The battery energy control modules internal cell balancing circuitry is powered by the cell group voltage sense circuits. In order to prevent an unrecoverable, unbalanced Hybrid/EV battery section or internal control module damage, always take the following actions:

1. Disconnect ALL of the battery energy control module connectors prior to disconnecting any Hybrid/EV battery section connector.
2. Reconnect all the Hybrid/EV battery section connectors prior to reconnecting the battery energy control module connectors.
3. Disconnect and reconnect the battery energy control module connectors ONLY in the sequence provided in Repair Instructions.

3. Disconnect all K16 battery energy control module connectors in the sequence provided in Repair Instructions. Refer to *Battery Energy Control Module Replacement on page 9-451*.
4. Disconnect all K112 Hybrid/EV Battery Interface Module connectors.

   Note: The Hybrid/EV Battery Section schematics in Energy Storage identify the battery section and voltage sense circuit terminal locations appropriate to each cell group and corresponding DTC.

5. Disconnect the harness connector at the appropriate C4 Hybrid/EV Battery Section harness connector. Connect the *EL-48571* High Voltage Battery Pin Out Box. Insert the DMM probes into the EL-48571 test cavities.
6. Measure and record the voltage of each of the cell groups by cycling the EL-48571 through each of the switch positions. Refer to *EL-48571 High Voltage Battery Pin Out Box Reference on page 9-368*.

⇒ **If any cell group is not between 2.5–4.7 V**

Replace the appropriate C4 Hybrid/EV Battery section.

⇒ **If any cell group is not within 0.05 V of each other**

Replace the appropriate C4 Hybrid/EV Battery section.

⇓ **If each cell group is between 2.5–4.7 V and is within 0.05 V of each other**

7. Test for infinite resistance between each appropriate voltage sense circuit terminals and ground.

⇒ **If less than infinite resistance**

Replace the Hybrid/EV Battery Pack Internal Harness.

⇓ **If infinite resistance**

8. Test for less than 2 Ω in each appropriate voltage sense circuits end to end.

⇒ **If 2 Ω or greater**

Replace the Hybrid/EV Battery Pack Internal Harness.

⇓ **If less than 2 Ω**

9. For DTC P0B3B–P1BD4, replace the K16 Battery Energy Control Module.

   For DTC P1BD5–P1E8B, replace the K112 Hybrid/EV Battery Interface Control Module.

Repair Instructions

Perform the *Diagnostic Repair Verification on page 6-123* after completing the repair.

- *High Voltage Battery Interface Control Module Replacement on page 9-512*
- *Drive Motor Battery Replacement and Shipping Preparation on page 9-524*
- *Control Module References on page 6-3* for battery energy control module and hybrid/EV battery interface control modules replacement, programming and setup.

DTC P0C77 or P0C78

Diagnostic Instructions

- Perform the *Diagnostic System Check - Vehicle on page 6-91* prior to using this diagnostic procedure.
- Review *Strategy Based Diagnosis on page 6-83* for an overview of the diagnostic approach.
- *Diagnostic Procedure Instructions on page 6-84* provides an overview of each diagnostic category.

DTC Descriptors

DTC P0C77: Hybrid/EV Battery System Precharge Time Too Short
DTC P0C78: Hybrid/EV Battery System Precharge Time Too Long

Circuit/System Description

The hybrid/EV battery energy control module will diagnose its own systems and determine when a fault condition is present. Diagnostics and system status is communicated from the hybrid/EV battery energy control module to the hybrid/EV powertrain control module 2 through serial data. The hybrid/EV powertrain control module 2 is the host controller for diagnostic trouble code (DTC) information. The battery energy control module monitors the hybrid/EV battery voltage at the battery side of the high voltage main contactors.

Conditions for Running the DTC

P0C77

- The main contactors are in precharge mode.
- Battery current sensor has not failed.
- High Voltage bus voltage sensor has not failed.
- High Voltage bus voltage less than 40 V before the start of precharge.

P0C78

- Battery voltage sensor has not failed.
- High Voltage bus voltage sensor has not failed.

OR

- Battery Current is less than battery voltage divided by 27.63 for greater than 87.5 ms while waiting for bus voltage to reach 95 % of battery voltage.

Conditions for Setting the DTC

P0C77

The bus voltage divided by the battery voltage is greater than 95 % of battery voltage in less than 50 ms.

P0C78

The bus voltage has not reached 95 % of battery voltage in 700 ms.

Action Taken When the DTC Sets

- DTC P0C77 and P0C78 are type B DTCs.
- The contactors will be opened.

Conditions for Clearing the DTC

DTC P0C77 and P0C78 are type B DTCs.

Diagnostic Aids

Note: If the high voltage contactors opened while under high current load, replace the drive motor battery wire junction block relay. The following conditions could cause the high voltage contactors to open while under high current load:

- A collision resulting in supplemental inflatable restraint (SIR) deployment.
- A loss of power or ground to the hybrid/EV powertrain control module 2 while the vehicle is moving.

The precharge time can be affected by the following:

- A long precharge time may be caused by a stuck OPEN hybrid/EV battery negative or hybrid/EV battery multifunction contactor.
- A long precharge time may be caused by a stuck CLOSED hybrid/EV battery precharge contactor.
- A long precharge time may be caused by a short on the propulsion bus preventing the main bus from reaching its target voltage.
- A short precharge time may be caused by a stuck hybrid/EV battery positive high voltage contactor.

Reference Information

Schematic Reference

Hybrid/EV Energy Storage Schematics on page 9-348

Connector End View Reference

Component Connector End Views on page 11-455

Description and Operation

Drive Motor Battery System Description on page 9-545

Electrical Information Reference

- *Circuit Testing on page 11-871*
- *Connector Repairs on page 11-895*
- *Testing for Intermittent Conditions and Poor Connections on page 11-877*
- *Wiring Repairs on page 11-883*

DTC Type Reference

Powertrain Diagnostic Trouble Code (DTC) Type Definitions on page 6-92

Scan Tool Reference

Control Module References on page 6-3 for scan tool information

Special Tools

- *EL-48900* HEV Safety Kit
- *EL-50772* Insulation Multimeter
- *EL-51099* Low Voltage Jumper Harness Extension

For equivalent regional tools, refer to *Special Tools on page 9-549*.

Circuit/System Verification

1. Vehicle in Service Mode.
2. Verify that DTC P0AA1, P0AD9, P0ADD, P0AE2, P0AE4, P0AFA, P0D0A, P0D11, P1EBC-P1EBF, P1EC0, or P1EC3-P1EC5 is not set.

⇒ **If any DTC is set**

refer to *Diagnostic Trouble Code (DTC) List - Vehicle on page 6-92*

⇓ **None of the DTCs are set**

3. With a scan tool, verify the hybrid/EV powertrain control module Hybrid/EV Powertrain Control Module High Voltage Circuit parameter and hybrid/EV powertrain control module 2 Hybrid Battery Pack Voltage parameter is between 180–425 V and should be within 10 V of each other.

⇒ **If the voltages are not between 180–425 V or not within 10 V of each other**

Refer to Circuit/System Testing.

⇓ **If the voltages are between 180–425 V and within 10 V of each other**

4. Vehicle OFF, with a scan tool, verify the hybrid/EV powertrain control module Hybrid/EV Powertrain Control Module High Voltage Circuit parameter is below 3 V and hybrid/EV powertrain control module 2 Hybrid Battery Pack Voltage parameter is between 180–425 V.

⇒ **If the voltages are not within the specified ranges**

Refer to Circuit/System Testing.

⇓ **If the voltages are within the specified ranges**

5. All OK.

Circuit/System Testing

Danger: Always perform the High Voltage Disabling procedure prior to servicing any High Voltage component or connection. Personal Protection Equipment (PPE) and proper procedures must be followed.

The High Voltage Disabling procedure includes the following steps:

- ***Identify how to disable high voltage.***
- ***Identify how to test for the presence of high voltage.***
- ***Identify condition under which high voltage is always present and personal protection equipment (PPE) and proper procedures must be followed.***

Before working on any high voltage system, be sure to wear the following Personal Protection Equipment:

- ***Safety glasses with appropriate side shields when within 15 meters (50 feet) of the vehicle, either indoors or outdoors.***
- ***Certified and up-to-date Class "0" Insulation gloves rated at 1000V with leather protectors.***
  - ***Visually and functionally inspect the gloves before use.***
  - ***Wear the Insulation gloves with leather protectors at all times when working with the high voltage battery assembly, whether the system is energized or not.***

Failure to follow the procedures may result in serious injury or death.

Note: The Battery Pack will utilize an exchange program. Please consult the most recent revision of bulletin/PI #PIP5112, available in Service Information (SI), for a list of approved Battery Pack service procedures. Components that may be removed and serviced without exchanging the complete battery pack are identified in the bulletin/PI. Please contact the GM Technical Assistance Center if you have any questions.

1. Vehicle OFF, disable the high voltage. Refer to *High Voltage Disabling on page 9-363*.
2. Disconnect the X1 harness connector at the A4 Hybrid/EV Battery Pack. Disconnect the X3 harness connector at the T6 Power Inverter Module.

   Note: The following continuity tests must be performed using an EL-50772 Insulation Multimeter. Select the Isolation test setting, then select the 500 V range.

3. Using the *EL-50772* Insulation Multimeter, test for greater than 750k Ω between the following points:
   - Terminal A X1 harness connector at the A4 Hybrid/EV Battery Pack and vehicle chassis ground.
   - Terminal B X1 harness connector at the A4 Hybrid/EV Battery Pack and vehicle chassis ground.
   - Terminal A X1 and terminal B X1 harness connector at the A4 Hybrid/EV Battery Pack.

⇒ **If less than 750k Ω**

Replace the 360 V DC cables.

⇓ **If greater than 750k Ω**

Note: The following continuity tests must be performed using the Ohm setting.

4. Test for less than 10 Ω between the following points:
   - Terminal A X1 and terminal 2 X3.
   - Terminal B X1 and terminal 1 X3.

⇒ **If 10 Ω or greater**

Replace the 360 V DC cables.

⇓ **If less than 10 Ω**

5. Disconnect the X358 harness connector at the A4 Hybrid/EV Battery Pack.

6. Test for less than 10 Ω between the ground circuit terminal 5 X358 and ground.

⇒ **If 10 Ω or greater**

6.1. Vehicle OFF.

6.2. Test for less than 2 Ω in the ground circuit end to end.

⇒ If 2 Ω or greater, repair the open/high resistance in the circuit.

⇒ If less than 2 Ω, repair the open/high resistance in the ground connection.

⇓ **If less than 10 Ω**

7. Connect the 12 V battery. Vehicle in Service Mode.
8. Test for less than 1 V between the control circuit listed below and ground;
   - Terminal 7 X358
   - Terminal 8 X358
   - Terminal 9 X358
   - Terminal 10 X358

⇒ **If 1 V or greater**

8.1. Vehicle OFF, disconnect the X1 harness connector at the K114B Hybrid Powertrain Control Module 2. Vehicle in Service Mode.

8.2. Test for less than 1 V between the control circuit and ground.

⇒ If 1 V or greater, repair the short to voltage on the circuit.

⇒ If less than 1 V, replace the K114B Hybrid Powertrain Control Module 2.

⇓ **If less than 1 V**

9. Vehicle OFF, install the *EL-51099* Low Voltage Jumper Harness Extension. Connect the S15 Manual Service Disconnect.

   Note: The following setup steps MUST BE PERFORMED EXACTLY in order to exercise the contactor.

10. Vehicle OFF, turn ON the park lamps.

    Note:

    - **DO NOT** press the power button and enter Vehicle in Service Mode or Vehicle ON.
    - Ignore P0ABC after pulling the S15 Manual Service Disconnect.

11. Command the Hybrid/EV Battery Contactors ALL OPEN with a scan tool.
12. Disconnect the S15 Manual Service Disconnect. Disconnect the *EL-51099* Low Voltage Jumper Harness Extension from the X358 harness connector at the A4 Hybrid/EV Battery Pack. Connect a test lamp between the control circuit terminal 7 X358 and ground.
13. Command the Hybrid/EV Battery Negative Contactor CLOSED and ALL OPEN with a scan tool. Verify that the test lamp turns ON and OFF.

⇒ **If the test lamp does not turn ON and OFF**

13.1. Vehicle OFF, remove the test lamp. Disconnect the X1 harness connector at the K114B Hybrid Powertrain Control Module 2. Vehicle in Service Mode.

13.2. Test for infinite resistance between control circuit and ground.

⇒ If less than infinite resistance, repair the short to ground on the circuit.

⇓ If infinite resistance

13.3. Test for less than 2 Ω in the control circuit end to end.

⇒ If 2 Ω or greater, repair the open/high resistance in the circuit.

⇒ If less than 2 Ω, replace the K114B Hybrid Powertrain Control Module 2.

⇓ **If the test lamp does turn ON and OFF**

14. Command the Hybrid/EV Battery Contactors ALL OPEN with a scan tool. Connect the test lamp between the control circuit terminal 8 X358 and ground.
15. Command the Hybrid/EV Battery Multifunction Contactor CLOSED and ALL OPEN with a scan tool. Verify that the test lamp turns ON and OFF.

⇒ **If the test lamp does not turn ON and OFF**

15.1. Vehicle OFF, remove the test lamp. Disconnect the X1 harness connector at the K114B Hybrid Powertrain Control Module 2. Vehicle in Service Mode.

15.2. Test for infinite resistance between control circuit and ground.

⇒ If less than infinite resistance, repair the short to ground on the circuit.

⇓ If infinite resistance

15.3. Test for less than 2 Ω in the control circuit end to end.

⇒ If 2 Ω or greater, repair the open/high resistance in the circuit.

⇒ If less than 2 Ω, replace the K114B Hybrid Powertrain Control Module 2.

⇓ **If the test lamp does turn ON and OFF**

16. Command the Hybrid/EV Battery Contactors ALL OPEN with a scan tool. Connect the test lamp between the control circuit terminal 9 X358 and ground.

17. Command the Hybrid/EV Battery Precharge Contactor CLOSED and ALL OPEN with a scan tool. Verify that the test lamp turns ON and OFF.

⇒ **If the test lamp does not turn ON and OFF**

17.1. Vehicle OFF, remove the test lamp. Disconnect the X1 harness connector at the K114B Hybrid Powertrain Control Module 2. Vehicle in Service Mode.

17.2. Test for infinite resistance between control circuit and ground.

⇒ If less than infinite resistance, repair the short to ground on the circuit.

⇓ If infinite resistance

17.3. Test for less than 2 Ω in the control circuit end to end.

⇒ If 2 Ω or greater, repair the open/high resistance in the circuit.

⇒ If less than 2 Ω, replace the K114B Hybrid Powertrain Control Module 2.

⇓ **If the test lamp does turn ON and OFF**

18. Command the Hybrid/EV Battery Contactors ALL OPEN with a scan tool. Connect the test lamp between the control circuit terminal 10 X358 and ground.

19. Command the Hybrid/EV Battery Multifunction Contactor CLOSED and ALL OPEN with a scan tool. Verify that the test lamp turns ON and OFF.

⇒ **If the test lamp does not turn ON and OFF**

19.1. Vehicle OFF, remove the test lamp. Disconnect the X1 harness connector at the K114B Hybrid Powertrain Control Module 2. Vehicle in Service Mode.

19.2. Test for infinite resistance between control circuit and ground.

⇒ If less than infinite resistance, repair the short to ground on the circuit.

⇓ If infinite resistance

19.3. Test for less than 2 Ω in the control circuit end to end.

⇒ If 2 Ω or greater, repair the open/high resistance in the circuit.

⇒ If less than 2 Ω, replace the K114B Hybrid Powertrain Control Module 2.

⇓ **If the test lamp does turn ON and OFF**

20. Replace the A28 Hybrid/EV Battery Contactor Assembly.

Repair Instructions

Perform the *Diagnostic Repair Verification on page 6-123* after completing the repair.

- *300-Volt Battery Positive and Negative Cable Replacement (Drive Motor Generator Power Inverter Module to Drive Motor Battery) on page 9-454* or *300-Volt Battery Positive and Negative Cable Replacement (Drive Motor Generator Power Inverter Module to High Voltage Battery Disconnect Module) on page 9-457*
- *Drive Motor Battery Positive High Voltage Contactor Relay Replacement on page 9-499*
- *Control Module References on page 6-3* for hybrid/EV powertrain control module 2 replacement, programming and setup.

DTC P1A07, P1E93, P1E99, P1E9F, P1EA5, P1FC3-P1FC8, P3035, or P3040

Diagnostic Instructions

- Perform the *Diagnostic System Check - Vehicle on page 6-91* prior to using this diagnostic procedure.
- Review *Strategy Based Diagnosis on page 6-83* for an overview of the diagnostic approach.
- *Diagnostic Procedure Instructions on page 6-84* provides an overview of each diagnostic category.

DTC Descriptors

DTC P1A07: Battery Energy Control Module 5 V Reference Circuit
DTC P1E93: Hybrid/EV Battery Interface Control Module 1 5 V Reference Circuit
DTC P1E99: Hybrid/EV Battery Interface Control Module 2 5 V Reference Circuit
DTC P1E9F: Hybrid/EV Battery Interface Control Module 3 5 V Reference Circuit
DTC P1EA5: Hybrid/EV Battery Interface Control Module 4 5 V Reference Circuit
DTC P1FC3: Hybrid/EV Battery Interface Control Module 5 5 V Reference Circuit
DTC P1FC4: Hybrid/EV Battery Interface Control Module 6 5 V Reference Circuit
DTC P1FC5: Hybrid/EV Battery Interface Control Module 7 5 V Reference Circuit
DTC P1FC6: Hybrid/EV Battery Interface Control Module 8 5 V Reference Circuit
DTC P1FC7: Hybrid/EV Battery Interface Control Module 9 5 V Reference Circuit
DTC P1FC8: Hybrid/EV Battery Interface Control Module 10 5 V Reference Circuit
DTC P3035: Hybrid/EV Battery Interface Control Module 11 5 V Reference Circuit
DTC P3040: Hybrid/EV Battery Interface Control Module 12 5 V Reference Circuit

Circuit/System Description

The hybrid battery contains 192 cells. Groups of two cells are welded together in parallel called cell groups. There are a total of 96 cell groups in the hybrid battery assembly. These cell groups are electrically connected in series. Each individual cell group is rated at 3.78V for a nominal system voltage of 363 V direct current when the high voltage battery is at 50% state of charge. Cell voltage will range from 2.7V to 4.15V under normal temperatures and not under load. There are 16 cell groups in each battery section. The battery cell groups are joined to form 6 equal sections.

The battery energy control module monitors the voltage of the 96 battery cell groups. There are diagnostics for 12 hybrid battery interface control modules. The battery energy control module encompasses 10 of the 12 hybrid battery interface control modules. The hybrid battery interface control module attached to the side of module 6 encompasses 2 of the 12 hybrid battery interface control modules. The voltage sense lines are attached to each individual cell group, and these sense lines terminate at connectors located at the end of the battery section. Each connector has 16 voltage sense lines. A high voltage measuring harness connects the hybrid battery interface control module and the battery energy control module, to each of the battery sections. The hybrid battery interface control module encodes the voltage reading for the 16 individual cell groups in battery section 6 and transmits it to the battery energy control module. The hybrid/EV battery energy control module monitors and compares each of the 16 individual cell groups and the sum of the 16 cell total. The hybrid/EV battery interface control modules, hybrid/EV battery energy control module and low voltage harness are all serviceable components.

The hybrid/EV battery energy control module will diagnose its own systems and determine when a fault condition is present. Diagnostics and system status is communicated from the hybrid/EV battery energy control module to the hybrid/EV powertrain control module 2 through serial data. The hybrid/EV powertrain control module 2 is the host controller for diagnostic trouble code (DTC) information.

Conditions for Running the DTC

P1A07

- The battery energy control module is awake and communicating.
- The 12 V battery voltage greater than or equal to 9 V.

P1E93, P1E99, P1E9F, P1EA5, P1FC3, P1FC4, P1FC5, P1FC6, P1FC7, P1FC8, P3035, and P3040

- The battery energy control module is awake and communicating.
- None of the following DTCs are set; U2603, U2604, U2605, U2606, U2617, U2618, U2619, U2620, U2621, U2622, U2623, U2624

Conditions for Setting the DTC

P1A07

The battery energy control module has detected a fault on the internal 5V reference circuit.

P1E93, P1E99, P1E9F, P1EA5, P1FC3, P1FC4, P1FC5, P1FC6, P1FC7, P1FC8, P3035, and P3040

A hybrid/EV battery interface control module has detected a fault on the internal 5V reference circuit.

Action Taken When the DTC Sets

DTCs P1A07 P1E93, P1E99, P1E9F, P1EA5, P1FC3, P1FC4, P1FC5, P1FC6, P1FC7, P1FC8, P3035, and P3040 are Type A DTCs.

Conditions for Clearing the DTC

DTCs P1A07 P1E93, P1E99, P1E9F, P1EA5, P1FC3, P1FC4, P1FC5, P1FC6, P1FC7, P1FC8, P3035, and P3040 are Type A DTCs.

Reference Information

Schematic Reference

Hybrid/EV Energy Storage Schematics on page 9-348

Connector End View Reference

Component Connector End Views on page 11-455

Description and Operation

Drive Motor Battery System Description on page 9-545

Electrical Information Reference

- *Circuit Testing on page 11-871*
- *Connector Repairs on page 11-895*
- *Testing for Intermittent Conditions and Poor Connections on page 11-877*
- *Wiring Repairs on page 11-883*

DTC Type Reference

Powertrain Diagnostic Trouble Code (DTC) Type Definitions on page 6-92

Scan Tool Reference

Control Module References on page 6-3 for scan tool information

Special Tools

EL-48900 HEV Safety Kit

For equivalent regional tools, refer to *Special Tools on page 9-549*.

Circuit/System Verification

Danger: Always perform the High Voltage Disabling procedure prior to servicing any High Voltage component or connection. Personal Protection Equipment (PPE) and proper procedures must be followed.

The High Voltage Disabling procedure will perform the following tasks:

- ***Identify how to disable high voltage.***
- ***Identify how to test for the presence of high voltage.***
- ***Identify condition under which high voltage is always present and personal protection equipment (PPE) and proper procedures must be followed.***

Failure to follow the procedures exactly as written may result in serious injury or death.

Note: The Battery Pack will utilize an exchange program. Please consult the most recent revision of bulletin/PI #PIP5112, available in Service Information (SI), for a list of approved Battery Pack service procedures. Components that may be removed and serviced without exchanging the complete battery pack are identified in the bulletin/PI. Please contact the GM Technical Assistance Center if you have any questions.

1. Verify that DTC P1A07, P1E93, P1E99, P1E9F, P1EA5, P1FC3, P1FC4, P1FC5, P1FC6, P1FC7, P1FC8, P3035, or P3040 is not set.

⇒ **If DTC P1A07, P1E93, P1E99, P1E9F, P1EA5, P1FC3, P1FC4, P1FC5, P1FC6, P1FC7, or P1FC8 is set**

Replace the K16 Battery Energy Control Module.

⇒ **If DTC P3035 or P3040 is set**

Replace the K112 Hybrid/EV Battery Interface Control Module.

⇓ **If none of the DTCs are set**

2. All OK.

Repair Instructions

Perform the *Diagnostic Repair Verification on page 6-123* after completing the repair.

- *High Voltage Battery Interface Control Module Replacement on page 9-512*
- *Control Module References on page 6-3* for battery energy control module or hybrid/EV interface control module replacement, programming and setup.

DTC P1E92, P1E98, P1E9E, P1EA4, P1FC9, P1FCA-P1FCE, P3036, or P3041

Diagnostic Instructions

- Perform the *Diagnostic System Check - Vehicle on page 6-91* prior to using this diagnostic procedure.
- Review *Strategy Based Diagnosis on page 6-83* for an overview of the diagnostic approach.
- *Diagnostic Procedure Instructions on page 6-84* provides an overview of each diagnostic category.

DTC Descriptors

DTC P1E92: Hybrid/EV Battery Interface Control Module 1 Cell Balancing Circuit
DTC P1E98: Hybrid/EV Battery Interface Control Module 2 Cell Balancing Circuit
DTC P1E9E: Hybrid/EV Battery Interface Control Module 3 Cell Balancing Circuit
DTC P1EA4: Hybrid/EV Battery Interface Control Module 4 Cell Balancing Circuit
DTC P1FC9: Hybrid/EV Battery Interface Control Module 5 Cell Balancing Circuit
DTC P1FCA: Hybrid/EV Battery Interface Control Module 6 Cell Balancing Circuit
DTC P1FCB: Hybrid/EV Battery Interface Control Module 7 Cell Balancing Circuit
DTC P1FCC: Hybrid/EV Battery Interface Control Module 8 Cell Balancing Circuit
DTC P1FCD: Hybrid/EV Battery Interface Control Module 9 Cell Balancing Circuit
DTC P1FCE: Hybrid/EV Battery Interface Control Module 10 Cell Balancing Circuit
DTC P3036: Hybrid/EV Battery Interface Control Module 11 Cell Balancing Circuit
DTC P3041: Hybrid/EV Battery Interface Control Module 12 Cell Balancing Circuit

Circuit/System Description

To maintain a similar state of charge on the cell groups, the hybrid/EV powertrain control module 2 looks at the cell group voltages and determines which cell groups need energy removed in order to maintain the battery groups at a similar state of charge. This is known as cell balancing. There is a resistor wired in parallel with the cell group and a transistor switch in series with the resistor internal to the hybrid/EV battery interface control module or the battery energy control module. The hybrid/EV powertrain control module 2 sends a command to the hybrid/EV battery energy control module to begin cell balancing.

Conditions for Running the DTC

- The hybrid/EV battery energy control module is awake and communicating.
- The high voltage fault circuit diagnostic is not running.
- The cell balancing circuit is greater than 3.0 V.
- None of the following DTCs are set, P1E8E, P1E94, P1E9A, P1EA0, P1FBD, P1FBE, P1FBF, P1FC0, P1FC1, P1FC2, P3037, P3042, U2603, U2604, U2605, U2606, U2617, U2618, U2619, U2620, U2621, U2622, U2623, or U2624.

Conditions for Setting the DTC

The hybrid/EV battery interface control module or the battery energy control module has detected an internal cell balancing switch fault.

Action Taken When the DTC Sets

- DTCs P1E92, P1E98, P1E9E, P1EA4, P1FC9, P1FCA, P1FCB, P1FCC, P1FCD, P1FCE, P3036, and P3041 are Type A DTCs.
- Cell balancing is disabled.

Conditions for Clearing the DTC

DTCs P1E92, P1E98, P1E9E, P1EA4, P1FC9, P1FCA, P1FCB, P1FCC, P1FCD, P1FCE, P3036, and P3041 are Type A DTCs.

Reference Information

Schematic Reference

Hybrid/EV Energy Storage Schematics on page 9-348

Connector End View Reference

Component Connector End Views on page 11-455

Description and Operation

Drive Motor Battery System Description on page 9-545

Electrical Information Reference

- *Circuit Testing on page 11-871*
- *Connector Repairs on page 11-895*
- *Testing for Intermittent Conditions and Poor Connections on page 11-877*
- *Wiring Repairs on page 11-883*

DTC Type Reference

Powertrain Diagnostic Trouble Code (DTC) Type Definitions on page 6-92

Scan Tool Reference

Control Module References on page 6-3 for scan tool information

Special Tools

EL-48900 HEV Safety Kit

For equivalent regional tools, refer to *Special Tools on page 9-549*.

Circuit/System Verification

Danger: Always perform the High Voltage Disabling procedure prior to servicing any High Voltage component or connection. Personal Protection Equipment (PPE) and proper procedures must be followed.

The High Voltage Disabling procedure will perform the following tasks:

- ***Identify how to disable high voltage.***
- ***Identify how to test for the presence of high voltage.***
- ***Identify condition under which high voltage is always present and personal protection equipment (PPE) and proper procedures must be followed.***

Failure to follow the procedures exactly as written may result in serious injury or death.

Note: The Battery Pack will utilize an exchange program. Please consult the most recent revision of bulletin/PI #PIP5112, available in Service Information (SI), for a list of approved Battery Pack service procedures. Components that may be removed and serviced without exchanging the complete battery pack are identified in the bulletin/PI. Please contact the GM Technical Assistance Center if you have any questions.

1. Verify that no other DTCs are set.

⇒ **If any other DTCs are set**

Refer to *Diagnostic Trouble Code (DTC) List - Vehicle on page 6-92*.

⇓ **If no other DTCs are set**

2. Verify that DTC P1E92, P1E98, P1E9E, P1EA4, P1FC9, P1FCA, P1FCB, P1FCC, P1FCD, P1FCE, P3036, or P3041 is set.

⇒ **If DTC P1E92, P1E98, P1E9E, P1EA4, P1FC9, P1FCA, P1FCB, P1FCC, P1FCD, or P1FCE is set**

Replace the K16 Battery Energy Control Module.

⇒ **If DTC P3036 or P3041 is set**

Replace the K112 Hybrid/EV Battery Interface Control Module.

⇓ **If none of the DTCs are set**

3. All OK.

Repair Instructions

Perform the *Diagnostic Repair Verification on page 6-123* after completing the repair.

- *High Voltage Battery Interface Control Module Replacement on page 9-512*
- *Control Module References on page 6-3* for battery energy control module and hybrid/EV interface control modules replacement, programming and setup.

DTC P1EAB or P1EAC

Diagnostic Instructions

- Perform the *Diagnostic System Check - Vehicle on page 6-91* prior to using this diagnostic procedure.
- Review *Strategy Based Diagnosis on page 6-83* for an overview of the diagnostic approach.
- *Diagnostic Procedure Instructions on page 6-84* provides an overview of each diagnostic category.

DTC Descriptors

DTC P1EAB: Battery Energy Control Module Hybrid/EV Battery Cell High Voltage

DTC P1EAC: Hybrid/EV Battery Cell Overvoltage Signal Circuit Performance

Circuit/System Description

The 2nd protection is a redundant method to monitor cell group overvoltage. The battery energy control module and hybrid/EV battery interface control module read and test each cell group. The 2nd protection circuit fault is the actual hardwire signal from the battery energy control module and hybrid/EV battery interface control module to the hybrid/EV powertrain control module 2. The hybrid/EV powertrain control module 2 diagnoses this line to determine when a cell group overvoltage condition exists.

The 2nd protection self test diagnostic is used to check the signal circuit. The battery energy control module performs this test, once, every power up cycle. When run/crank input signal transitions high and after a calibrated delay, the battery energy control module informs the hybrid/EV powertrain control module 2, via serial data communication bus that it is about to run the diagnostics on the 2nd protection circuit. The battery energy control module and hybrid/EV battery interface control module then proceed to run the check by pulling the signal circuit low and releasing it, in sequence. If any pulses are missing, the battery energy control module is able to diagnose and set the fault. The battery energy control module then sends this information to the hybrid/EV powertrain control module 2 on the serial data.

Conditions for Running the DTC

P1EAB

- The battery energy control module and hybrid/EV powertrain control module 2 are awake and communicating.
- The 12 V battery voltage greater than or equal to 10.2 V.
- DTC P0B3B, P0B3D, P0B3E, P0B40, P0B42, P0B43, P0B45, P0B47, P0B48, P0B4A, P0B4C, P0B4D, P0B4F, P0B51, P0B52, P0B54, P0B56, P0B57, P0B59, P0B5B, P0B5C, P0B5E, P0B60, P0B61, P0B63, P0B65, P0B66, P0B68, P0B6A, P0B6B, P0B6D, P0B6F, P0B70, P0B74, P0B75, P0B77, P0B79, P0B7A, P0B7C, P0B7E, P0B7F, P0B81, P0B83, P0B84, P0B86, P0B88, P0B89, P0B8B, P0B8D, P0B8E, P0B92, P0B93, P0B95, P0B97, P0B98, P0B9A, P0B9C, P0B9D, P0B9F, P0BA1, P0BA2, P0BA4, P0BA6, P0BA7, P0BA9, P0BAB, P0BAC, P0BAE, P0BB0, P0BB1, P0BB3, P0BB5, P0BB6, P0BB8, P0BBA, P0BBB, P1B17, P1B18, P1B1A, P1B1B, P1B1D, P1B1E, P1B20, P1B21, P1B22, P1B23, P1B24, P1B25, P1B26, P1B27, P1B28, P1B29, P1B2A, P1B2B, P1B2C, P1B2D, P1B45, P1B46, P1B47, P1B48, P1B49, P1B4A, P1B4C, P1B4D, P1B4F, P1B50, P1B52, P1B53, P1B55, P1B56, P1B58, P1B59, P1B5B, P1B5C, P1B5E, P1B5F, P1B61, P1B62, P1B64, P1B65, P1B67, P1B68, P1B6A, P1B6B, P1B6D, P1B6E, P1B70, P1B71, P1B73, P1B74, P1B76, P1B77, P1B79, P1B7A, P1B7C, P1B7D, P1B7F, P1B80, P1B82, P1B83, P1B85, P1B86, P1B88, P1B89, P1B8B, P1B8C, P1B8E, P1B8F, P1B91, P1B92, P1B94, P1B95, P1B97, P1B98, P1B9A, P1B9B, P1B9D, P1B9E, P1BA0, P1BA1, P1BA3, P1BA4, P1BA6, P1BA7, P1BA9, P1BAA, P1BAC, P1BAD, P1BAF, P1BB0, P1BB2, P1BB3, P1BB5, P1BB6, P1BB8, P1BB9, P1BBB, P1BBC, P1BBE, P1BBF, P1BC1, P1BC2, P1BC4, P1BC5, P1BC7, P1BC8, P1BCA, P1BCB, P1BCD, P1BCE, P1BD0, P1BD1, P1BD2, P1BD3, P1BD4, P1BD5, P1BD6, P1BD7, P1BD8, P1BD9, P1BDA, P1BDB, P1BDC, P1BDD, P1BDF, P1BE0, P1BE2, P1BE3, P1BE5, P1BE6, P1BE8, P1BE9, P1BEB, P1BEC, P1BEE, P1BEF, P1BF1, P1BF2, P1BF4, P1BF5, P1BF7, P1BF8, P1BFA, P1BFB, P1BFD, P1BFE, P1E02, P1E03, P1E05, P1E06, P1E4C, P1E4D, P1E4E, P1E4F, P1E50, P1E51, P1E52, P1E53, P1E54, P1E56, P1E57, P1E58, P1E59, P1E5A, P1E5B, P1E5C, P1E5D, P1E5E, P1E5F, P1E60, P1E61, P1E62, P1E63, P1E64, P1E65, P1E66, P1E67, P1E68, P1E69, P1E6A, P1E6B, P1E6C, P1E6E, P1E6F, P1E70, P1E71, P1E72, P1E73, P1E74, P1E75, P1E76, P1E77, P1E78, P1E79, P1E7A, P1E7B, P1E7C, P1E7D, P1E7E, P1E7F, P1E80, P1E81, P1E82, P1E83, P1E84, P1E86, P1E87, P1E88, P1E89, P1E8A, P1E8E, P1E8F, P1E90, P1E91, P1E93, P1E94, P1E95, P1E96, P1E97, P1E99, P1E9A, P1E9B, P1E9C, P1E9D, P1E9F, P1EA0, P1EA1, P1EA2, P1EA3, P1EA5, P1EB1, P1EB5,P1F66, P1F67, P1F68, P1F69, P1F6A, P1F6B, P1F6C, P1F6D, P1F6E, P1F6F, P1F70, P1F71, P1F72, P1F73, P1F74, P1F75, P1F76, P1F77, P1F78, P1F79, P1F7A, P1F7B, P1F7C, P1F7D, P1F7E, P1F7F, P1F80, P1F81, P1F82, P1F83, P1F84, P1F85, P1F86, P1F87, P1F88, P1F89, P1F8A, P1F8B, P1F8C, P1F8D, P1F8E, P1F8F, P1F90, P1F91, P1F92, P1F93, P1F94, P1F95, U0111, U185A, U2401, U2603, U2604, U2605, or U2606 is not set.

P1EAC

- The battery energy control module and hybrid/EV powertrain control module 2 are awake and communicating.
- Vehicle must be cycled from Vehicle OFF to Vehicle ON for 20 seconds.
- The vehicle is not in charge mode.
- The 12 V battery voltage greater than or equal to 10.2 V.
- The power inverter module voltage is greater than 367 V.
- DTC P0B3B, P0B3D, P0B3E, P0B40, P0B42, P0B43, P0B45, P0B47, P0B48, P0B4A, P0B4C, P0B4D, P0B4F, P0B51, P0B52, P0B54, P0B56, P0B57, P0B59, P0B5B, P0B5C, P0B5E, P0B60, P0B61, P0B63, P0B65, P0B66, P0B68, P0B6A, P0B6B, P0B6D, P0B6F, P0B70, P0B74, P0B75, P0B77, P0B79, P0B7A, P0B7C, P0B7E, P0B7F, P0B81, P0B83, P0B84, P0B86, P0B88, P0B89, P0B8B, P0B8D, P0B8E, P0B92, P0B93, P0B95, P0B97, P0B98, P0B9A, P0B9C, P0B9D, P0B9F, P0BA1, P0BA2, P0BA4, P0BA6, P0BA7, P0BA9, P0BAB, P0BAC, P0BAE, P0BB0, P0BB1, P0BB3, P0BB5, P0BB6, P0BB8, P0BBA, P0BBB, P1B17, P1B18, P1B1A, P1B1B, P1B1D, P1B1E, P1B20, P1B21, P1B22, P1B23, P1B24, P1B25, P1B26, P1B27, P1B28, P1B29, P1B2A, P1B2B, P1B2C, P1B2D, P1B45, P1B46, P1B47, P1B48, P1B49, P1B4A, P1B4C, P1B4D, P1B4F, P1B50, P1B52, P1B53, P1B55, P1B56, P1B58, P1B59, P1B5B, P1B5C, P1B5E, P1B5F, P1B61, P1B62, P1B64, P1B65, P1B67, P1B68, P1B6A, P1B6B, P1B6D, P1B6E, P1B70, P1B71, P1B73, P1B74, P1B76, P1B77, P1B79, P1B7A, P1B7C, P1B7D, P1B7F, P1B80, P1B82, P1B83, P1B85, P1B86, P1B88, P1B89, P1B8B, P1B8C, P1B8E, P1B8F, P1B91, P1B92, P1B94, P1B95, P1B97, P1B98, P1B9A, P1B9B, P1B9D, P1B9E, P1BA0, P1BA1, P1BA3, P1BA4, P1BA6, P1BA7, P1BA9, P1BAA, P1BAC, P1BAD, P1BAF, P1BB0, P1BB2, P1BB3, P1BB5, P1BB6, P1BB8, P1BB9, P1BBB, P1BBC, P1BBE, P1BBF, P1BC1, P1BC2, P1BC4, P1BC5, P1BC7, P1BC8, P1BCA, P1BCB, P1BCD, P1BCE, P1BD0, P1BD1, P1BD2, P1BD3, P1BD4, P1BD5, P1BD6, P1BD7, P1BD8, P1BD9, P1BDA, P1BDB, P1BDC, P1BDD, P1BDF, P1BE0, P1BE2, P1BE3, P1BE5, P1BE6, P1BE8, P1BE9, P1BEB, P1BEC, P1BEE, P1BEF, P1BF1, P1BF2, P1BF4, P1BF5, P1BF7, P1BF8, P1BFA, P1BFB, P1BFD, P1BFE, P1E02, P1E03, P1E05, P1E06, P1E4C, P1E4D, P1E4E, P1E4F, P1E50, P1E51, P1E52, P1E53, P1E54, P1E56, P1E57, P1E58, P1E59, P1E5A, P1E5B, P1E5C, P1E5D, P1E5E, P1E5F, P1E60, P1E61, P1E62, P1E63, P1E64, P1E65, P1E66, P1E67, P1E68, P1E69, P1E6A, P1E6B, P1E6C, P1E6E, P1E6F, P1E70, P1E71, P1E72, P1E73, P1E74, P1E75, P1E76, P1E77, P1E78, P1E79, P1E7A, P1E7B, P1E7C, P1E7D, P1E7E, P1E7F, P1E80, P1E81, P1E82, P1E83, P1E84, P1E86, P1E87, P1E88, P1E89, P1E8A, P1E8E, P1E8F, P1E90, P1E91, P1E93, P1E94, P1E95, P1E96, P1E97, P1E99, P1E9A, P1E9B, P1E9C, P1E9D, P1E9F, P1EA0, P1EA1, P1EA2, P1EA3, P1EA5, P1EB1, P1EB5,P1F66, P1F67, P1F68, P1F69, P1F6A, P1F6B, P1F6C, P1F6D, P1F6E, P1F6F, P1F70, P1F71, P1F72, P1F73, P1F74, P1F75, P1F76, P1F77, P1F78, P1F79, P1F7A, P1F7B, P1F7C, P1F7D, P1F7E, P1F7F, P1F80, P1F81, P1F82, P1F83, P1F84, P1F85, P1F86, P1F87, P1F88, P1F89, P1F8A, P1F8B, P1F8C, P1F8D, P1F8E, P1F8F, P1F90, P1F91, P1F92, P1F93, P1F94, P1F95, U0111, U185A, U2401, U2603, U2604, U2605, or U2606 is not set.

Conditions for Setting the DTC

P1EAB

A cell overvoltage greater than 4.58 V is detected.

P1EAC

- The hybrid/EV powertrain control module 2 has detected a fault with the 2nd protection fault flag.

  OR
- The battery energy control module sends a overvoltage signal/circuit test active to the hybrid/EV powertrain control module 2 after a request to cancel the overvoltage signal/circuit test.

  OR
- The battery energy control module sends a overvoltage signal/circuit test not active to the hybrid/EV powertrain control module 2 after a request to run the overvoltage signal/circuit test.

Action Taken When the DTC Sets

- DTCs P1EAB and P1EAC are type A DTCs.
- If any of these DTCs are set, the vehicle will operate in a reduced power mode.
- Once Vehicle Power has been turned OFF all of the contactors will be prevented from closing.

Conditions for Clearing the DTC

- DTCs P1EAB and P1EAC are type A DTCs.
- After the repair for DTC P1EAB, with a scan tool, perform the *Clear Secured High Voltage DTCs on page 9-539* to prevent DTCs from resetting.
- Vehicle Power cycled from ON to OFF after code clear

Reference Information

Schematic Reference

Hybrid/EV Energy Storage Schematics on page 9-348

Connector End View Reference

Component Connector End Views on page 11-455

Description and Operation

Drive Motor Battery System Description on page 9-545

Electrical Information Reference

- *Circuit Testing on page 11-871*
- *Connector Repairs on page 11-895*
- *Testing for Intermittent Conditions and Poor Connections on page 11-877*
- *Wiring Repairs on page 11-883*

DTC Type Reference

Powertrain Diagnostic Trouble Code (DTC) Type Definitions on page 6-92

Scan Tool Reference

Control Module References on page 6-3 for scan tool information

Special Tools

- *EL-48900* HEV Safety Kit
- *EL-51099* Low Voltage Jumper Harness Extension

For equivalent regional tools, refer to *Special Tools on page 9-549*.

Circuit/System Verification

1. Verify that no other DTCs are set.

⇒ **If any other DTCs are set**

Refer to *Diagnostic Trouble Code (DTC) List - Vehicle on page 6-92*.

⇓ **If no other DTCs are set**

2. Verify that DTC P1EAB or P1EAC is set.

⇒ **If DTC P1EAB or P1EAC is set**

Refer to Circuit/System Testing.

⇓ **If DTC P1EAB or P1EAC is not set**

3. All OK.

Circuit/System Testing

Danger: Always perform the High Voltage Disabling procedure prior to servicing any High Voltage component or connection. Personal Protection Equipment (PPE) and proper procedures must be followed.

The High Voltage Disabling procedure includes the following steps:

- ***Identify how to disable high voltage.***
- ***Identify how to test for the presence of high voltage.***
- ***Identify condition under which high voltage is always present and personal protection equipment (PPE) and proper procedures must be followed.***

Before working on any high voltage system, be sure to wear the following Personal Protection Equipment:

- ***Safety glasses with appropriate side shields when within 15 meters (50 feet) of the vehicle, either indoors or outdoors.***
- ***Certified and up-to-date Class "0" Insulation gloves rated at 1000V with leather protectors.***
  - ***Visually and functionally inspect the gloves before use.***
  - ***Wear the Insulation gloves with leather protectors at all times when working with the high voltage battery assembly, whether the system is energized or not.***

Failure to follow the procedures may result in serious injury or death.

Note: The Battery Pack will utilize an exchange program. Please consult the most recent revision of bulletin/PI #PIP5112, available in Service Information (SI), for a list of approved Battery Pack service procedures. Components that may be removed and serviced without exchanging the complete battery pack are identified in the bulletin/PI. Please contact the GM Technical Assistance Center if you have any questions.

1. Vehicle OFF, disable the high voltage. Refer to *High Voltage Disabling on page 9-363*
2. Disconnect the X357 harness connector at the A4 Hybrid/EV Battery Pack. Connect the 12 V battery, Vehicle in Service Mode.
3. Test for 4.8–5.2 V between the overvoltage signal circuit terminal 13 and ground.

⇒ **If less than 4.8 V**

3.1. Vehicle OFF.

3.2. Test for infinite resistance between the overvoltage signal circuit and ground.

⇒ If less than infinite resistance, repair the short to ground on the circuit.

⇓ If infinite resistance

3.3. Test for less than 2 Ω in the overvoltage signal circuit end to end.

⇒ If 2 Ω or greater, repair the open/high resistance in the circuit.

⇒ If less than 2 Ω, replace the K114B Hybrid/EV Powertrain Control Module 2. After the repair, with a scan tool, perform the *Clear Secured High Voltage DTCs on page 9-539*

⇒ **If greater than 5.2 V**

3.1. Vehicle OFF, disconnect the X2 harness connector at the K114B Hybrid/EV Powertrain Control Module 2. Vehicle in Service Mode.

3.2. Test for less than 1 V between the overvoltage signal circuit and ground.

⇒ If 1 V or greater, repair the short to voltage on the circuit.

⇒ If less than 1 V, replace the K114B Hybrid/EV Powertrain Control Module 2. After the repair, with a scan tool, perform the *Clear Secured High Voltage DTCs on page 9-539*

⇓ **If with in the specified range**

4. Vehicle OFF, remove the A4 Hybrid/EV Battery Pack cover. Refer to *Drive Motor Battery Cover Replacement on page 9-449*. Connect the *EL-51099* Low Voltage Jumper Harness Extension.
5. Disconnect the X12 harness connector at the K16 Battery Energy Control Module. Disconnect the X36 harness connector at the K112 Hybrid/EV Battery Interface Control Module. Vehicle in Service Mode.

6. Test for 4.8–5.2 V at the K16 Battery Energy Control Module X12 connector between the overvoltage signal circuit terminal 9 and ground.

⇒ **If less than 4.8 V**

6.1. Vehicle OFF.

6.2. Test for infinite resistance between the overvoltage signal circuit and ground.

⇒ If less than infinite resistance, repair the short to ground on the circuit.

⇓ If infinite resistance

6.3. Replace the A4 Hybrid/EV Battery Pack.

⇒ **If greater than 5.2 V**

Replace the A4 Hybrid/EV Battery Pack.

⇓ **If within the specified range**

7. Test for 4.8–5.2 V at the K112 Hybrid/EV Battery Interface Control Module X36 connector between the overvoltage signal circuit terminal 13 and ground.

⇒ **If not within the specified range**

Replace the A4 Hybrid/EV Battery Pack.

⇓ **If within the specified range**

8. Replace the K112 Hybrid/EV Battery Interface Control Module. After the repair, with a scan tool, perform the *Clear Secured High Voltage DTCs on page 9-539*.
9. Verify that DTC P1EAB or P1EAC are not set after replacing the K112 Hybrid/EV Battery Interface Control Module.

⇒ **If DTC P1EAB or P1EAC still set after replacing the K112 Hybrid/EV Battery Interface Control Module**

Replace the K16 Battery Energy Control Module. After the repair, with a scan tool, perform the *Clear Secured High Voltage DTCs on page 9-539*.

⇓ **If DTC P1EAB or P1EAC are not set**

10. All OK.

Repair Instructions

Perform the *Diagnostic Repair Verification on page 6-123* after completing the repair.

- *Drive Motor Battery Replacement and Shipping Preparation on page 9-524*
- *Control Module References on page 6-3* for battery energy control module, hybrid/EV interface control module, or hybrid/EV powertrain control module 2 replacement, programming and setup.

DTC P1FD5-P1FF2

Diagnostic Instructions

- Perform the *Diagnostic System Check - Vehicle on page 6-91* prior to using this diagnostic procedure.
- Review *Strategy Based Diagnosis on page 6-83* for an overview of the diagnostic approach.
- *Diagnostic Procedure Instructions on page 6-84* provides an overview of each diagnostic category.

DTC Descriptors

DTC P1FD5: Hybrid/EV Battery Interface Control Module 1 Voltage Sensor Circuit Low Voltage
DTC P1FD6: Hybrid/EV Battery Interface Control Module 2 Voltage Sensor Circuit Low Voltage
DTC P1FD7: Hybrid/EV Battery Interface Control Module 3 Voltage Sensor Circuit Low Voltage
DTC P1FD8: Hybrid/EV Battery Interface Control Module 4 Voltage Sensor Circuit Low Voltage
DTC P1FD9: Hybrid/EV Battery Interface Control Module 5 Voltage Sensor Circuit Low Voltage
DTC P1FDA: Hybrid/EV Battery Interface Control Module 6 Voltage Sensor Circuit Low Voltage
DTC P1FDB: Hybrid/EV Battery Interface Control Module 7 Voltage Sensor Circuit Low Voltage
DTC P1FDC: Hybrid/EV Battery Interface Control Module 8 Voltage Sensor Circuit Low Voltage
DTC P1FDD: Hybrid/EV Battery Interface Control Module 9 Voltage Sensor Circuit Low Voltage
DTC P1FDE: Hybrid/EV Battery Interface Control Module 10 Voltage Sensor Circuit Low Voltage
DTC P1FDF: Hybrid/EV Battery Interface Control Module 1 Voltage Sensor Circuit High Voltage
DTC P1FE0: Hybrid/EV Battery Interface Control Module 2 Voltage Sensor Circuit High Voltage
DTC P1FE1: Hybrid/EV Battery Interface Control Module 3 Voltage Sensor Circuit High Voltage
DTC P1FE2: Hybrid/EV Battery Interface Control Module 4 Voltage Sensor Circuit High Voltage
DTC P1FE3: Hybrid/EV Battery Interface Control Module 5 Voltage Sensor Circuit High Voltage
DTC P1FE4: Hybrid/EV Battery Interface Control Module 6 Voltage Sensor Circuit High Voltage
DTC P1FE5: Hybrid/EV Battery Interface Control Module 7 Voltage Sensor Circuit High Voltage
DTC P1FE6: Hybrid/EV Battery Interface Control Module 8 Voltage Sensor Circuit High Voltage
DTC P1FE7: Hybrid/EV Battery Interface Control Module 9 Voltage Sensor Circuit High Voltage
DTC P1FE8: Hybrid/EV Battery Interface Control Module 10 Voltage Sensor Circuit High Voltage
DTC P1FE9: Hybrid/EV Battery Interface Control Module 1 Voltage Sensor Circuit Performance
DTC P1FEA: Hybrid/EV Battery Interface Control Module 2 Voltage Sensor Circuit Performance
DTC P1FEB: Hybrid/EV Battery Interface Control Module 3 Voltage Sensor Circuit Performance
DTC P1FEC: Hybrid/EV Battery Interface Control Module 4 Voltage Sensor Circuit Performance
DTC P1FED: Hybrid/EV Battery Interface Control Module 5 Voltage Sensor Circuit Performance
DTC P1FEE: Hybrid/EV Battery Interface Control Module 6 Voltage Sensor Circuit Performance
DTC P1FEF: Hybrid/EV Battery Interface Control Module 7 Voltage Sensor Circuit Performance
DTC P1FF0: Hybrid/EV Battery Interface Control Module 8 Voltage Sensor Circuit Performance
DTC P1FF1: Hybrid/EV Battery Interface Control Module 9 Voltage Sensor Circuit Performance
DTC P1FF2: Hybrid/EV Battery Interface Control Module 10 Voltage Sensor Circuit Performance

Circuit/System Description

The hybrid battery contains 192 cells. Groups of two cells are welded together in parallel called cell groups. There are a total of 96 cell groups in the hybrid battery assembly. These cell groups are electrically connected in series. Each individual cell group is rated at 3.78 V for a nominal system voltage of 363 V direct current when the high voltage battery is at 50% state of charge. Cell voltage will range from 2.7 V to 4.15 V under normal temperatures and not under load. There are 16 cell groups in each battery section. The battery cell groups are joined to form 6 equal sections.

The battery energy control module monitors the voltage of the 96 battery cell groups. There are diagnostics for 12 hybrid battery interface control modules. The battery energy control module encompasses 10 of the 12 hybrid battery interface control modules. The hybrid battery interface control module attached to the side of module 6 encompasses 2 of the 12 hybrid battery interface control modules. The voltage sense lines are attached to each individual cell group, and these sense lines terminate at connectors located at the end of the battery section. Each connector has 16 voltage sense lines. A high voltage measuring harness connects the hybrid battery interface control module and the battery energy control module, to each of the battery sections. The hybrid battery interface control module encodes

the voltage reading for the 16 individual cell groups in battery section 6 and transmits it to the battery energy control module. The hybrid/EV battery energy control module monitors and compares each of the 16 individual cell groups and the sum of the 16 cell total. The hybrid/EV battery interface control modules, hybrid/EV battery energy control module and low voltage harness are all serviceable components.

The hybrid/EV battery energy control module will diagnose its own systems and determine when a fault condition is present. Diagnostics and system status is communicated from the hybrid/EV battery energy control module to the hybrid/EV powertrain control module 2 through serial data. The hybrid/EV powertrain control module 2 is the host controller for diagnostic trouble code (DTC) information.

Conditions for Running the DTC

P1FD5, P1FD6, P1FD7, P1FD8, P1FD9, P1FDA, P1FDB, P1FDC, P1FDD, P1FDE, P1FDF, P1FE0, P1FE1, P1FE2, P1FE3, P1FE4, P1FE5, P1FE6, P1FE7, and P1FE8

- The hybrid/EV battery energy control module and hybrid/EV powertrain control module 2 are awake and communicating.
- None of the hybrid/EV battery energy control module loss of communication with hybrid/EV battery interface control module 1–12 DTCs are set.
- None of the hybrid/EV battery interface control module 1–12 performance DTCs are set.

P1FE9, P1FEA, P1FEB, P1FEC, P1FED, P1FEE, P1FEF, P1FF0, P1FF1, and P1FF2

- The hybrid/EV battery energy control module and hybrid/EV powertrain control module 2 are awake and communicating.
- None of the hybrid/EV battery energy control module loss of communication with hybrid/EV battery interface control module 1–12 DTCs are set.
- None of the hybrid/EV battery interface control module 1–12 performance DTCs are set.
- None of the hybrid/EV battery 1–96 circuit low voltage DTCs are set.
- None of the hybrid/EV battery 1–96 circuit high voltage DTCs are set.
- None of the hybrid/EV battery 1–96 circuit DTCs are set.

Conditions for Setting the DTC

P1FD5, P1FD6, P1FD7, P1FD8, P1FD9, P1FDA, P1FDB, P1FDC, P1FDD, and P1FDE

A hybrid/EV battery interface control module has detected the voltage sum of 8 cell groups in a section are less than 1.5 V.

P1FDF, P1FE0, P1FE1, P1FE2, P1FE3, P1FE4, P1FE5, P1FE6, P1FE7, and P1FE8

A hybrid/EV battery interface control module has detected the voltage sum of 8 cell groups in a section are greater than 8.5 V.

P1FE9, P1FEA, P1FEB, P1FEC, P1FED, P1FEE, P1FEF, P1FF0, P1FF1, and P1FF2

A hybrid/EV battery interface control module has detected a deviation between the module voltage sum of a half section minus the voltage sum of 8 individual cell groups in a section is greater than 0.6 V

Action Taken When the DTC Sets

DTCs P1FD5, P1FD6, P1FD7, P1FD8, P1FD9, P1FDA, P1FDB, P1FDC, P1FDD, P1FDE, P1FDF, P1FE0, P1FE1, P1FE2, P1FE3, P1FE4, P1FE5, P1FE6, P1FE7, P1FE8, P1FE9, P1FEA, P1FEB, P1FEC, P1FED, P1FEE, P1FEF, P1FF0, P1FF1, and P1FF2 are Type A DTCs.

Conditions for Clearing the DTC

DTCs P1FD5, P1FD6, P1FD7, P1FD8, P1FD9, P1FDA, P1FDB, P1FDC, P1FDD, P1FDE, P1FDF, P1FE0, P1FE1, P1FE2, P1FE3, P1FE4, P1FE5, P1FE6, P1FE7, P1FE8, P1FE9, P1FEA, P1FEB, P1FEC, P1FED, P1FEE, P1FEF, P1FF0, P1FF1, and P1FF2 are Type A DTCs.

Reference Information

Schematic Reference

Hybrid/EV Energy Storage Schematics on page 9-348

Connector End View Reference

Component Connector End Views on page 11-455

Description and Operation

Drive Motor Battery System Description on page 9-545

Electrical Information Reference

- *Circuit Testing on page 11-871*
- *Connector Repairs on page 11-895*
- *Testing for Intermittent Conditions and Poor Connections on page 11-877*
- *Wiring Repairs on page 11-883*

DTC Type Reference

Powertrain Diagnostic Trouble Code (DTC) Type Definitions on page 6-92

Scan Tool Reference

Control Module References on page 6-3 for scan tool information

Special Tools

- *EL-48571* High Voltage Battery Pin Out Box
- *EL-48571-50* High Voltage Battery Pin Out Box Cable
- *EL-48900* HEV Safety Kit

For equivalent regional tools, refer to *Special Tools on page 9-549*.

Circuit/System Verification

1. Vehicle in Service Mode.
2. Verify each of the scan tool Hybrid/EV Battery 1–96 parameters are between 2.5–4.7 V and all readings are within 0.05 V of each other.

⇒ **If the parameters are not between 2.5–4.7 V or not within 0.05 V of each other**

Refer to Circuit/System Testing.

⇓ **If the parameters are between 2.5–4.7 V and within 0.05 V of each other**

3. All OK.

Circuit/System Testing

Danger: Always perform the High Voltage Disabling procedure prior to servicing any High Voltage component or connection. Personal Protection Equipment (PPE) and proper procedures must be followed.

The High Voltage Disabling procedure will perform the following tasks:

- ***Identify how to disable high voltage.***
- ***Identify how to test for the presence of high voltage.***
- ***Identify condition under which high voltage is always present and personal protection equipment (PPE) and proper procedures must be followed.***

Failure to follow the procedures exactly as written may result in serious injury or death.

Note: The Battery Pack will utilize an exchange program. Please consult the most recent revision of bulletin/PI #PIP5112, available in Service Information (SI), for a list of approved Battery Pack service procedures. Components that may be removed and serviced without exchanging the complete battery pack are identified in the bulletin/PI. Please contact the GM Technical Assistance Center if you have any questions.

1. Vehicle OFF, disable high voltage. Refer to *High Voltage Disabling on page 9-363*. Remove the A4 Hybrid/EV Battery Pack cover. Refer to *Drive Motor Battery Cover Replacement on page 9-449*

Note: Do not leave the EL-48571 connected to the hybrid/EV battery section harness or leave the hybrid/EV battery section harness disconnected for more than one hour. Leaving the EL-48571 connected to the hybrid/EV battery section harness or leaving the hybrid/EV battery section harness disconnected for more than one hour will result in an unrecoverable, unbalanced hybrid/EV battery section.

2. Disconnect the harness connector at the appropriate C4 Hybrid/EV Battery Section harness connector.
3. Connect the *EL-48571* High Voltage Battery Pin Out Box.
4. Insert the DMM probes into the EL-48571 test cavities.
5. Measure and record the voltage of each cell group by cycling the EL-48571 through each of the switch positions. Refer to *EL-48571 High Voltage Battery Pin Out Box Reference on page 9-368*.
6. Verify each cell group voltage reading is between 2.5–4.7 V.

⇒ **If not between 2.5–4.7 V**

Replace the appropriate C4 Hybrid/EV Battery section.

⇓ **If between 2.5–4.7 V**

7. Verify each cell group voltage reading is within 0.05 V of each other.

⇒ **If the readings are not within the 0.05 V of each other**

Replace the appropriate C4 Hybrid/EV Battery section.

⇓ **If the readings are within the 0.05 V of each other**

8. Replace the K16 Battery Energy Control Module.

Repair Instructions

Perform the *Diagnostic Repair Verification on page 6-123* after completing the repair.

- *High Voltage Battery Interface Control Module Replacement on page 9-512*
- *Drive Motor Battery Replacement and Shipping Preparation on page 9-524*
- *Control Module References on page 6-3* for battery energy control module or hybrid/EV interface control modules replacement, programming and setup.

DTC P1F17

Diagnostic Instructions

- Perform the *Diagnostic System Check - Vehicle on page 6-91* prior to using this diagnostic procedure.
- Review *Strategy Based Diagnosis on page 6-83* for an overview of the diagnostic approach.
- *Diagnostic Procedure Instructions on page 6-84* provides an overview of each diagnostic category.

DTC Descriptor

DTC P1F17: System Isolation / Impact Sensor Fault - Hybrid/EV Battery System Contactors Open

Circuit/System Description

The hybrid/EV powertrain control module 2 will set DTC P1F17 if the hybrid/EV powertrain control module 1 has detected a passive loss of isolation, the supplemental inflatable restraint sensors are not working or has lost communications with the hybrid/EV powertrain control module 1 and the supplemental inflatable restraint module.

Conditions for Running the DTC

Vehicle ON.

Conditions for Setting the DTC

- P1AF0, P1AF2, or P1E22 is set in the hybrid/EV powertrain control module 1.
- The supplemental inflatable restraint module roll over, air bag, or inertia sensors are not working.

  OR
- P1AF0, P1AF2, or P1E22 is set in the hybrid/EV powertrain control module 1.
- DTC U184E is set.

  OR
- The hybrid/EV powertrain control module 2 has lost communications with the hybrid/EV powertrain control module 1.
- DTC U184E is set.

  OR
- The hybrid/EV powertrain control module 2 has lost communications with the hybrid/EV powertrain control module 1.
- The supplemental inflatable restraint module roll over, air bag, or inertia sensors are not working.

Action Taken When the DTC Sets

- DTC P1F17 is a type A DTC.
- All of the contactors will be prevented from closing.

Conditions for Clearing the DTC

- DTC P1F17 is a type A DTC.
- The *Clear Secured High Voltage DTCs on page 9-539* reset function must be performed with a scan tool before clear codes.

Reference Information

Schematic Reference

Hybrid/EV Energy Storage Schematics on page 9-348

Connector End View Reference

Component Connector End Views on page 11-455

Description and Operation

Drive Motor Battery System Description on page 9-545

Electrical Information Reference

- *Circuit Testing on page 11-871*
- *Connector Repairs on page 11-895*
- *Testing for Intermittent Conditions and Poor Connections on page 11-877*
- *Wiring Repairs on page 11-883*

DTC Type Reference

Powertrain Diagnostic Trouble Code (DTC) Type Definitions on page 6-92

Scan Tool Reference

Control Module References on page 6-3 for scan tool information

Circuit/System Verification

1. Vehicle in Service Mode.
2. Verify that no other DTCs are set.

⇒ **If any other DTCs are set**

Refer to *Diagnostic Trouble Code (DTC) List - Vehicle on page 6-92*

⇓ **If none of the DTCs are set**

3. Verify that DTC P1F17 is not set.

⇒ **If DTC P1F17 is set**

3.1. Verify the K36 Inflatable Restraint Sensing And Diagnostic Module is programmed with the correct software calibration.

⇒ If the correct software is not installed, program the K36 Inflatable Restraint Sensing And Diagnostic Module.

⇓ If the correct software is installed

3.2. Perform the *Clear Secured High Voltage DTCs on page 9-539* repair instruction.

3.3. Verify that DTC P1F17 does not set while operating the vehicle within the Conditions for Running the DTC.

⇒ If DTC P1F17 is set, replace the K114B Hybrid Powertrain Control Module 2.

⇓ If DTC P1F17 is not set

3.4. All OK.

⇓ **If DTC P1F17 is not set**

4. All OK.

Repair Instructions

Perform the *Diagnostic Repair Verification on page 6-123* after completing the repair.

Control Module References on page 6-3 for hybrid/EV powertrain control module 2 and inflatable restraint sensing and diagnostic module replacement, programming and setup.

DTC P1FF4

Diagnostic Instructions

- Perform the *Diagnostic System Check - Vehicle on page 6-91* prior to using this diagnostic procedure.
- Review *Strategy Based Diagnosis on page 6-83* for an overview of the diagnostic approach.
- *Diagnostic Procedure Instructions on page 6-84* provides an overview of each diagnostic category.

DTC Descriptor

DTC P1FF4: System Isolation / Impact Sensor Fault - Hybrid/EV Battery System Contactors Open

Circuit/System Description

The hybrid/EV powertrain control module 2 will set DTC P1FF4 if the hybrid/EV powertrain control module 1 has detected a passive loss of isolation, the supplemental inflatable restraint sensors are not working or has lost communications with the hybrid/EV powertrain control module 1 and the supplemental inflatable restraint module.

Conditions for Running the DTC

- Vehicle ON.
- The 12 V battery voltage is greater than 9 V.

Conditions for Setting the DTC

- The hybrid/EV powertrain control module 1 detects a "passive" isolation fault
- P1AF0, P1AF2, or P1E22 is set in the hybrid/EV powertrain control module 1.
- The supplemental inflatable restraint module roll over, air bag, or inertia sensors are not working.

  OR
- The hybrid/EV powertrain control module 1 detects a "passive" isolation fault
- P1AF0, P1AF2, or P1E22 is set in the hybrid/EV powertrain control module 1.
- DTC U184E is set.

  OR
- The hybrid/EV powertrain control module 2 has lost communications with the hybrid/EV powertrain control module 1.
- DTC U184E is set.

  OR
- The hybrid/EV powertrain control module 2 has lost communications with the hybrid/EV powertrain control module 1.
- The supplemental inflatable restraint module roll over, air bag, or inertia sensors are not working.

Action Taken When the DTC Sets

- DTC P1FF4 is a type A DTC.
- All of the contactors will be prevented from closing.

Conditions for Clearing the DTC

- DTC P1FF4 is a type A DTC.
- The *DC Charging Disabled Reset on page 9-656* function must be performed with a scan tool before clear codes.

Reference Information

Schematic Reference

Hybrid/EV Energy Storage Schematics on page 9-348

Connector End View Reference

Component Connector End Views on page 11-455

Description and Operation

Drive Motor Battery System Description on page 9-545

Electrical Information Reference

- *Circuit Testing on page 11-871*
- *Connector Repairs on page 11-895*
- *Testing for Intermittent Conditions and Poor Connections on page 11-877*
- *Wiring Repairs on page 11-883*

DTC Type Reference

Powertrain Diagnostic Trouble Code (DTC) Type Definitions on page 6-92

Scan Tool Reference

Control Module References on page 6-3 for scan tool information

Circuit/System Verification

1. Verify that no other DTCs are set.

⇒ **If any other DTCs are set**

Refer to *Diagnostic Trouble Code (DTC) List - Vehicle on page 6-92*.

⇓ **If no other DTCs are set**

2. Verify the K36 Inflatable Restraint Sensing And Diagnostic Module is programmed with the correct software calibration.

⇒ **If the correct software is not installed**

Program the K36 Inflatable Restraint Sensing And Diagnostic Module. Refer to *Control Module References on page 6-3*

⇓ **If the correct software is installed**

3. Perform the *High Voltage System Inspection on page 9-441*
4. If DTC P1FF4 is set, clear the DTC. Review and operate the vehicle according to the DTC Conditions for Running. Verify that DTC P1FF4 does not reset and no other DTCs are set.

⇒ **If any other DTCs are set**

Refer to *Diagnostic Trouble Code (DTC) List - Vehicle on page 6-92*.

⇒ **If DTC P1FF4 is set**

Replace the K114B Hybrid/EV Powertrain Control Module 2.

⇓ **If no DTCs are set**

5. All OK.

Repair Instructions

Perform the *Diagnostic Repair Verification on page 6-123* after completing the repair.

Control Module References on page 6-3 for hybrid/EV powertrain control module 2 and inflatable restraint sensing and diagnostic module replacement, programming and setup.

Loss of Isolation on the High Voltage Main Bus

Diagnostic Instructions

- Perform the *Diagnostic System Check - Vehicle on page 6-91* prior to using this diagnostic procedure.
- Review *Strategy Based Diagnosis on page 6-83* for an overview of the diagnostic approach.
- *Diagnostic Procedure Instructions on page 6-84* provides an overview of each diagnostic category.

Circuit/System Description

Vehicles equipped with high voltage energy storage are designed with the high voltage circuits isolated from the vehicle chassis. If either the positive or negative high voltage Direct Current (DC) circuits or any of the high voltage Alternating Current (AC) phase circuits lose this isolation to the vehicle chassis, one or more diagnostic trouble codes (DTCs) may set.

The vehicle utilizes Passive and Active isolation testing to determine the amount of isolation between the high voltage and the chassis.

Passive isolation testing is performed within the power inverter module and tests whenever the high voltage main contactors are closed. Utilizing a high impedance resistor network, passive isolation detection monitors all high voltage components including the hybrid/EV battery pack and isolation loss results in DTCs P1AF0, P1AF2 and/or P1E22. Real-time status of passive isolation detection can be determined by observing the delta between the Positive Supply Isolation Voltage and Negative Supply Isolation Voltage scan tool parameters. The parameters are displayed by any of the Motor Control Modules.

Active isolation testing is performed by the hybrid powertrain control module 2 and tests after the high voltage main contactors open. Utilizing an injected AC signal, active isolation detection monitors the internal Hybrid/EV battery pack as well as the charging system direct current (DC) high voltage circuits and isolation loss results in DTCs P0AA6 or P0DAA. Status for the prior active isolation detection event can be determined by observing the hybrid powertrain control module 2 Isolation Test Resistance scan tool parameter. Real-time status observation requires the HPCM2 scan tool control function Hybrid/EV Battery Pack Isolation Test.

Diagnosis for isolation requires testing with high voltage potential. Special insulation testing multimeters such as the EL-50772 utilize their own internal high voltage and must be used to test the isolation capability of high voltage components and circuits. Refer to *Troubleshooting With an Insulation Multimeter on page 9-438*.

Diagnostic Aids

Prior to disabling high voltage:

Monitoring certain scan tool parameters when high voltage is active may help to identify which high voltage components and circuits have lost their chassis isolation. The Vehicle Information selection within the HPCM2 scan tool Data Display contains many parameters related to isolation diagnosis. The Drive Motor Control Module Positive Supply Isolation Voltage and Drive Motor Control Module Negative Supply Isolation Voltage parameters provide a real-time indication of isolation status. The parameters will shift in respect to one another relative to the level of isolation loss. The greater the delta, or difference, between parameters, the less isolation exists between high voltage and the vehicle chassis.

Isolation Loss between HV Components and Chassis, Positive Side*

Isolation between HV Bus and Chassis	Normal Vehicle	10M	5M	1M	500K	200K Approxi-mate Passive Isolation DTC set point	100K	None — Direct Short
Positive Isolation Parameter*	198V	180V	165V	110V	75V	35V	20V	0V
Negative Isolation Parameter*	192V	210V	225V	280V	315V	355V	370V	390V

Isolation Loss between HV Components and Chassis, Positive Side* (cont'd)

Isolation between HV Bus and Chassis	Normal Vehicle	10M	5M	1M	500K	200K Approximate Passive Isolation DTC set point	100K	None — Direct Short
Delta Between Parameters	0–15V	30V	60V	170V	240V	320V	350V	390V

*Typical values observed with a fully charged pack, 390V. A short to the positive bus is shown, a short to the negative bus would display inverted voltages of similar value.

Certain isolation loss concerns may only appear during high moisture environmental conditions. Drive the vehicle thru an underbody spraying-style car wash while monitoring the delta between Positive Supply Isolation Voltage and the Negative Supply Isolation Voltage scan tool parameters.

Isolation loss might only occur when a high voltage device is active. Use the High Voltage Component Test Method table and operate each HV component while monitoring the delta between Positive Supply Isolation Voltage and the Negative Supply Isolation Voltage scan tool parameters.

High Voltage Component Test Methods

HV Component	Scan Tool Parameter	Most Complete Test Method
G1 Electric A/C Compressor	Power Requested by Electric A/C Compressor from Hybrid/EV Battery Pack (HPCM2)	HVAC Cabin Controls and Monitor Isolation Voltage Parameter Delta
K10 Coolant Heater	Power Requested by Electric Passenger Compartment Heater from Hybrid/EV Battery Pack (HPCM2)	HVAC Cabin Controls and Monitor Isolation Voltage Parameter Delta
E54 Battery Heater	Hybrid/EV Battery Pack Heater Power Command (HPCM2)	Hybrid/EV Battery Pack Heater Power GDS2 Scan Tool Control Function (HPCM2) and Monitor Isolation Voltage Parameter Delta
		Review the DTC P1EC6 Conditions for Running and Monitor Isolation Voltage Parameter while heater is commanded ON
T18 Battery Charger	Active During Charge	Insulation Multimeter
T24 Battery Charger – DC (CBT)	N/A - Active During Charge and Active with High Voltage Enabled	Insulation Multimeter
T24 Battery Charger – DC (w/o CBT)	N/A - Always Active with High Voltage Enabled	Insulation Multimeter
K1 14V Power Module	14V Module High Voltage Circuit Current (HPCM1)	Insulation Multimeter
T6 Power Inverter Module	N/A - Always Active with High Voltage Enabled	Insulation Multimeter
M15 Drive Motor	N/A - Always Active with High Voltage Enabled	Insulation Multimeter
G5 Transmission Fluid Pump	N/A - Always Active in Autostop/EV Mode	Insulation Multimeter
A4 Battery Pack – Internal Side of Contactors	Isolation Concern Results in DTC P0AA6/P0DAA	

After disabling high voltage:

High Voltage cables disconnected at each end from their respective modules must be tested with the insulation meter connected to their shield circuit and not to vehicle chassis.

The *EL-50772* insulation meter, when set to the 500V scale, indicates 550M Ω when measuring infinite or open circuit conditions. An equivalent meter may display 'infinite' value in a different manner.

Reference Information

Schematic Reference

- *Hybrid/EV Energy Storage Schematics on page 9-348*
- *Hybrid/EV Controls Schematics on page 9-54*

Connector End View Reference

Component Connector End Views on page 11-455

Description and Operation

Hybrid/EV System High Voltage Isolation Description on page 9-545 for:

- Passive Isolation circuit detail
- Active Isolation circuit detail
- Complete High Voltage system schematic

Electrical Information Reference

Troubleshooting With an Insulation Multimeter on page 9-438

Scan Tool Reference

Control Module References on page 6-3 for scan tool information

Special Tools

- *EL-48900* HEV Safety Kit
- *EL-50772* Insulation Multimeter

For equivalent regional tools, refer to *Special Tools on page 9-549*.

Circuit/System Verification

1. Remove all vehicle chargers.
2. Vehicle ON.
3. Verify that DTC P0AA1, P0AA4, P0AD9, P0ADD, P0AE2, P0AE4, P0D0A, P0D11, P1EBC, P1EBE-P1EC0, or P1EC3-P1EC5 is not set.

⇒ **If any DTC is set**

Refer to *DTC P0AA1, P0AA4, P0AD9, P0ADD, P0AE2, P0AE4, P0D0A, P0D11, P1EBC, P1EBE-P1EC0, or P1EC3-P1EC5 on page 9-378*.

⇓ **If none of the DTCs are set**

4. Verify that DTC P0AA6 or P1AE6 is not set.

⇒ **If any DTC is set**

Refer to *DTC P0AA6, P0DAA, P1AE6, or P1F0E on page 9-392*.

⇓ **If none of the DTCs are set**

5. Vehicle ON, observe the scan tool Drive Motor Positive Supply Isolation Voltage and the Drive Motor Negative Supply Isolation Voltage scan tool parameters.
6. Is the delta, or difference, between the Positive Supply Isolation Voltage and the Negative Supply Isolation Voltage scan tool parameters greater than 15 volts?

⇒ **If the delta is greater than 15 volts**

Using the High Voltage Component Test Methods table as a guide, observe and record which components are active. Refer to Circuit/System Testing.

⇓ **If the delta is 15 volts or less**

7. Using the High Voltage Component Test Method table as a guide, turn ON devices one at a time while monitoring the isolation voltage delta.
8. Is the delta between the Positive Supply Isolation Voltage and the Negative Supply Isolation Voltage scan tool parameters greater than 15 volts when a component is active?

⇒ **If the delta is greater than 15 volts**

Observe and record which components are active. Refer to Circuit/System Testing.

⇓ **If the delta is 15 volts or less**

9. Turn the vehicle OFF, open and close the drivers door and wait two minutes.
10. PRESS and HOLD the brake pedal and activate the HPCM2 scan tool control function Hybrid/EV Battery Pack Isolation Test. The battery pack isolation test will complete in less than a minute. Verify the Isolation Test Resistance parameter when the test is complete is greater than 600K ohms.

⇒ **If the resistance is 600K or less**

Refer to *DTC P0AA6, P0DAA, P1AE6, or P1F0E on page 9-392*.

⇓ **If the resistance is greater than 600K ohms**

11. Vehicle OFF. Connect the vehicle charge cord. Ensure charge mode is active.
12. With charge mode already active, Vehicle ON and observe the scan tool Drive Motor Positive Supply Isolation Voltage and the Drive Motor Negative Supply Isolation Voltage scan tool parameters.
13. Is the delta between the Positive Supply Isolation Voltage and the Negative Supply Isolation Voltage scan tool parameters greater than 15 volts?

⇒ **If the delta is greater than 15 volts**

Refer to Circuit/System Testing.

⇓ **If the delta is less than 15 volts**

14. All OK, review Diagnostic Aids.

Circuit/System Testing

Danger: Ensure all High Voltage safety procedures are followed. Failure to follow the procedure exactly as written may result in serious injury or death.

Danger: Before working on any high voltage system, be sure to wear the following Personal Protection Equipment:

- ***Safety glasses with appropriate side shields when within 50 feet of the vehicle, either indoors or outdoors***
- ***Certified and up-to-date Class "0" Insulation gloves rated at 1000V with leather protectors***
  - ***Visually and functionally inspect the gloves before use.***
  - ***Wear the Insulation gloves at all times when working with the high voltage battery assembly, whether the system is energized or not.***

Failure to follow the procedure exactly as written may result in serious injury or death.

Danger: This vehicle is equipped with a high voltage battery that is completely isolated from the chassis ground. Never utilize AC powered test equipment to probe the high voltage system. Serious injury, death and component damage could occur if the high voltage system is grounded through the electric utility.

Failure to follow the procedure exactly as written may result in serious injury or death.

Note: Wear your High Voltage Insulation gloves until you have determined that a high voltage exposure risk is no longer present.

1. Vehicle OFF, disable the high voltage. Refer to *High Voltage Disabling on page 9-363*.

   Note: Only perform the following continuity tests using the *EL-50772* Insulation Multimeter or equivalent.

2. Ensure only the *EL-50772* Insulation Multimeter or equivalent is used with this procedure. Select the Isolation Test setting, then select the 500V range. Refer to *Troubleshooting With an Insulation Multimeter on page 9-438* for important usage instructions.

   Note: This procedure assumes the High Voltage Disable procedure was followed and that the A4 Hybrid/EV Battery Pack connectors X1 and X2 along with the T24 Battery Charger-DC connector X1 are disconnected.

3. Test for 550M Ω between the circuit terminals listed below and chassis ground, using the *EL-50772* Insulation Multimeter:
   - T24 Battery Charger-DC connector terminal A +300V X1
   - T24 Battery Charger-DC connector terminal B −300V X1

⇒ **If less than 550M Ω**

3.1. Disconnect T24 Battery Charger-DC harness connector X5.

Note: There may be up to a 5 second delay for proper test results to be displayed, always press and hold the EL-50772 test button until maximum measurement values are observed.

3.2. Test for 550M Ω between the circuit terminals listed below and the cable shield:
- T24 Battery Charger-DC harness connector terminal A +300V X5
- T24 Battery Charger-DC harness connector terminal B −300V X5

⇒ If less than 550M Ω

3.2.1. Disconnect the G1 A/C Compressor harness connector X2.

Note: There may be up to a 5 second delay for proper test results to be displayed, always press and hold the EL-50772 test button until maximum measurement values are observed.

3.2.2. Test for 550M Ω between the circuit terminals listed below and the cable shield:
- G1 A/C Compressor connector terminal A +300V X2
- G1 A/C Compressor connector terminal B −300V X2

⇒ If less than 550M Ω, replace the G1 A/C Compressor module.

⇒ If 550M Ω, replace the Battery Positive and Negative (300V) cable.

⇓ If 550M Ω

3.3. Disconnect the T24 Battery Charger-DC harness connector X4.

3.4. Test for 550M Ω between the circuit terminals listed below and the cable shield:
- T24 Battery Charger-DC harness connector terminal A +300V X4
- T24 Battery Charger-DC harness connector terminal B −300V X4

⇒ If less than 550M Ω

3.4.1. Disconnect the K10 Heater harness connector X2.

3.4.2. Test for 550M Ω between the circuit terminals listed below and the cable shield:
- K10 Heater connector terminal A +300V X2
- K10 Heater connector terminal B −300V X2

⇒ If less than 550M Ω, replace the K10 Heater module.

⇒ If 550M Ω, replace the Battery Positive and Negative (300V) cable.

⇓ If 550M Ω

3.5. Disconnect the T24 Battery Charger-DC harness connector X3.

3.6. Test for 550M Ω between the circuit terminals listed below and the cable shield:
- T24 Battery Charger-DC harness connector terminal A +300V X3
- T24 Battery Charger-DC harness connector terminal B −300V X3

⇒ If less than 550M Ω

3.6.1. Disconnect the K1 14V Power Module harness connector X1.

3.6.2. Test for 550M Ω between the circuit terminals listed below and the chassis ground:
- K1 14V Power Module connector terminal A +300V X1
- K1 14V Power Module connector terminal B −300V X1

⇒ If less than 550M Ω, replace the K1 14V Power Module.

⇒ If 550M Ω replace the Battery Positive and Negative (300V) cable.

⇓ If 550M Ω

3.7. Is the vehicle equipped with DC charge RPO option CBT?

⇒ If the vehicle does not have RPO CBT, replace the T24 Battery Charger-DC module.

⇓ If the vehicle has RPO CBT

3.7.1. Disconnect the T24 Battery Charger-DC harness connector X2.

3.7.2. Test for 550M Ω between the circuit terminals listed below and the cable shield:
- T24 Battery Charger-DC harness connector terminal A +300V X2
- T24 Battery Charger-DC harness connector terminal B −300V X2

⇒ If less than 550M Ω, replace the X98 Hybrid/EV Battery Charger Receptacle.

⇒ If 550M Ω, replace the T24 Battery Charger-DC module.

⇓ **If 550M Ω**

4. Disconnect the T6 Power Inverter Module harness connector X4.
5. Test for 550M Ω between the circuit terminals listed below and the cable shield:
   - T24 Battery Charger-DC harness connector terminal A +300V X1
   - T24 Battery Charger-DC harness connector terminal B −300V X1

⇒ **If less than 550M Ω**

Replace the Battery Positive and Negative (300V) cable.

⇓ **If 550M Ω**

6. Disconnect the T6 Power Inverter Module harness connector X3.
7. Test for 550M Ω between the circuit terminals below and the cable shield:
   - T6 Power Inverter Module harness connector terminal A +300V X3
   - T6 Power Inverter Module harness connector terminal B −300V X3

⇒ **If less than 550M Ω**

Replace the Battery Positive and Negative (300V) cable.

⇓ **If 550M Ω**

8. Disconnect the T6 Power Inverter Module harness connector X8.

   Note: There may be up to a 5 second delay for proper test results to be displayed, always press and hold the EL-50772 test button until maximum measurement values are observed.
9. Test for 550M Ω between the 3 phase cable harness circuit terminals below and chassis ground:
   - Terminal 1 300V X8
   - Terminal 2 300V X8
   - Terminal 3 300V X8

⇒ **If less than 550M Ω**

9.1. Disconnect the G5 Transmission Fluid Pump 3 phase cable connector at the transmission.

9.2. Test for 550M Ω between the G5 transmission fluid pump connector circuit terminals below and chassis ground:
- Terminal 1 300V
- Terminal 2 300V
- Terminal 3 300V

⇒ If less than 550M Ω, replace the G5 Transmission Fluid Pump.

⇒ If 550M Ω, replace the 3 phase cable.

⇓ **If 550M Ω**

10. Disconnect the T6 Power Inverter Module harness connector X5.

    Note: There may be up to a 5 second delay for proper test results to be displayed, always press and hold the EL-50772 test button until maximum measurement values are observed.

11. Test for 550M Ω between the 3 phase cable harness circuit terminals below and chassis ground:
    - Terminal 1 300V X5
    - Terminal 2 300V X5
    - Terminal 3 300V X5

⇒ **If less than 550M Ω**

11.1. Disconnect the M15 Drive Motor 3 phase cable assembly at the transmission.

11.2. Test for 550M Ω between the M15 Drive Motor transmission connector terminals below and chassis ground:
- Terminal 1 300V
- Terminal 2 300V
- Terminal 3 300V

⇒ If less than 550M Ω, replace the M15 Drive Motor.

⇒ If 550M Ω, replace the 3 phase cable.

⇓ **If 550M Ω**

Note: There may be up to a 5 second delay for proper test results to be displayed, always press and hold the EL-50772 test button until maximum measurement values are observed.

12. Test for 1.1M Ω or greater between each T6 Power Inverter Module circuit terminal listed below and chassis ground:
    - Terminal 1 300V X8
    - Terminal 2 300V X8
    - Terminal 3 300V X8
    - Terminal 1 300V X5
    - Terminal 2 300V X5
    - Terminal 3 300V X5
    - Terminal A +300V X4
    - Terminal B −300V X4
    - Terminal A +300V X3
    - Terminal B −300V X3

⇒ **If less than 1.1M Ω**

Replace the T6 Power Inverter Module.

⇓ **If 1.1M Ω or greater**

13. Test for 550 Ω between the circuit terminals listed below and chassis ground:
    - A4 Hybrid/EV Battery Pack connector terminal A +300V X1
    - A4 Hybrid/EV Battery Pack connector terminal B −300V X1

⇒ **If less than 550M Ω**

A loss of isolation exists within the A4 Hybrid/EV Battery Pack. Refer to *Hybrid/EV Battery Voltage Present on page 9-437*.

⇓ **If 550M Ω**

14. Test for 550 Ω between the circuit terminals listed below and chassis ground:
    - A4 Hybrid/EV Battery Pack connector terminal A +300V X2
    - A4 Hybrid/EV Battery Pack connector terminal B −300V X2

⇒ **If less than 550M Ω**

A loss of isolation exists within the A4 Hybrid/EV Battery Pack. Refer to *Hybrid/EV Battery Voltage Present on page 9-437*.

⇓ **If 550M Ω**

15. Test for 550M Ω between the circuit terminals listed below and the cable shield:
    - A4 Hybrid/EV Battery Pack harness connector terminal A +300V X2
    - A4 Hybrid/EV Battery Pack harness connector terminal B −300V X2

⇒ **If less than 500M Ω**

15.1. Disconnect the T18 Battery Charger harness connector X4.

15.2. Test for 550M Ω between the circuit terminals listed below and chassis ground:
- T18 Battery Charger connector terminal A +300V X4
- T18 Battery Charger connector terminal B −300V X4

⇒ If less than 550M Ω, replace the T18 Battery Charger module.

⇒ If 550M Ω, replace the T18 Battery Charger Cable (300V).

⇓ **If 550M Ω**

16. All OK, review Diagnostic Aids.

Component Testing

1. Perform component testing only after high voltage is disabled.
2. Test with the *EL-50772* insulation multimeter, or equivalent, set only at 500V.

HV Component	Component Setup	Insulation Multimeter Test Point	EL-50772 Expected Results
G1 Electric A/C Compressor	None	1. HV Pos+ terminal to compressor housing/HV Neg- terminal to compressor housing 2. Test continuously for several seconds until maximum measurement is obtained.	550M Ω
K10 Coolant Heater	Plug one coolant port and fill with coolant	HV Pos+ terminal to cable shield/HV Neg- terminal to cable shield	550M Ω
E54 Battery Heater	1. Remove from Hybrid/EV Battery Pack. 2. Plug one coolant port and fill with coolant.	HV Pos+ terminal to heater housing/HV Neg- terminal to heater housing	550M Ω
T18 Battery Charger	None	HV DC Pos+ terminal to module housing/HV DC Neg- terminal to module housing	550M Ω
T24 Battery Charger-DC (w/o CBT)	None	HV DC Pos+ terminal to module housing/HV DC Neg- terminal to module housing at all connectors	550M Ω
T24 Battery Charger-DC (w/ CBT)	None	HV DC Pos+ terminal to module housing/HV DC Neg- terminal to module housing at all connectors except X2	550M Ω
		HV DC Pos+ terminal to module housing/HV DC Neg- terminal to module housing at connector X2	15M Ω
K1 14V Power Module	None	HV Pos+ terminal to module housing/HV Neg- terminal to module housing	550M Ω
T6 Power Inverter Module	None	1. Each HV terminal, both AC and DC, to module housing. 2. Test continuously for several seconds until maximum measurement is obtained.	1.1 to 1.2M Ω
M15 Drive Motor	None	1. Any HV 3 phase terminal to stator ground. 2. Test continuously for several seconds until maximum measurement is obtained.	550M Ω
G5 Transmission Fluid Pump	None	1. Any HV 3 phase terminal to stator ground. 2. Test continuously for several seconds until maximum measurement is obtained.	550M Ω
300-V Battery Positive and Negative Cables	Disconnect cables at both ends	HV Pos+ terminal to cable shield/HV Neg- terminal to cable shield	550M Ω

Repair Instructions

Perform the *Diagnostic Repair Verification on page 6-123* after completing the repair.

- *300-Volt Battery Positive and Negative Cable Replacement (Drive Motor Generator Power Inverter Module to Drive Motor Battery) on page 9-454* or *300-Volt Battery Positive and Negative Cable Replacement (Drive Motor Generator Power Inverter Module to High Voltage Battery Disconnect Module) on page 9-457*
- *Air Conditioning Compressor Replacement on page 10-26*
- *Heater Coolant Heater Replacement on page 10-74*
- *Accessory DC Power Control Module Replacement on page 9-189*
- *Drive Motor Replacement on page 16-45*
- *Transmission Fluid Pump Replacement on page 16-39*
- *Drive Motor Power Inverter Module 3 Phase Cable Replacement on page 9-182*
- *High Voltage Battery Disconnect Control Module Module Replacement (with quick charge) on page 9-175* or *High Voltage Battery Disconnect Control Module Module Replacement (without quick charge) on page 9-179* for T24 Batter Charger-DC
- *Drive Motor Battery Positive High Voltage Contactor Relay Replacement on page 9-499* for BDU replacement
- *Drive Motor Battery Charger Replacement on page 9-649*
- *Drive Motor Battery Charger Receptacle Replacement (Without quick charge) on page 9-652* or *Drive Motor Battery Charger Receptacle Replacement (With quick charge) on page 9-654*
- *Battery Heater Replacement on page 9-306*
- *Control Module References on page 6-3* for the T6 power inverter module replacement, programming and setup.

Hybrid/EV Battery Voltage Present

Diagnostic Instructions

- Perform the *Diagnostic System Check - Vehicle on page 6-91* prior to using this diagnostic procedure.
- Review *Strategy Based Diagnosis on page 6-83* for an overview of the diagnostic approach.
- *Diagnostic Procedure Instructions on page 6-84* provides an overview of each diagnostic category.

Circuit/System Description

The hybrid/EV battery contains 6 high voltage contactors and 1 module. The high voltage contactors and transistor allow the high voltage DC batteries to be connected to the vehicle or safely contain the high voltage DC within the hybrid/EV battery assembly. The 6 high voltage contactors consist of a main positive high voltage contactor, main negative high voltage contactor, charge positive high voltage contactor, charge negative high voltage contactor, multi-function high voltage contactor and precharge contactor. The 1 module is the heater module or heater control module. The contactors and module close and open in a specific sequence controlled by the hybrid/EV powertrain control module 2. The hybrid/EV powertrain control module 2 supplies voltage to the control circuit for the high voltage contactors/module. Ground is provided through the case ground and chassis.

Reference Information

Schematic Reference

Hybrid/EV Energy Storage Schematics on page 9-348

Connector End View Reference

Component Connector End Views on page 11-455

Description and Operation

Drive Motor Battery System Description on page 9-545

Electrical Information Reference

- *Circuit Testing on page 11-871*
- *Connector Repairs on page 11-895*
- *Testing for Intermittent Conditions and Poor Connections on page 11-877*
- *Wiring Repairs on page 11-883*

DTC Type Reference

Powertrain Diagnostic Trouble Code (DTC) Type Definitions on page 6-92

Scan Tool Reference

Control Module References on page 6-3 for scan tool information

Special Tools

EL-48900 HEV Safety Kit

For equivalent regional tools, refer to *Special Tools on page 9-549*.

Circuit/System Testing

Danger: Always perform the High Voltage Disabling procedure prior to servicing any High Voltage component or connection. Personal Protection Equipment (PPE) and proper procedures must be followed.

The High Voltage Disabling procedure includes the following steps:

- ***Identify how to disable high voltage.***
- ***Identify how to test for the presence of high voltage.***
- ***Identify condition under which high voltage is always present and personal protection equipment (PPE) and proper procedures must be followed.***

Before working on any high voltage system, be sure to wear the following Personal Protection Equipment:

- ***Safety glasses with appropriate side shields when within 15 meters (50 feet) of the vehicle, either indoors or outdoors.***

- ***Certified and up-to-date Class "0" Insulation gloves rated at 1000V with leather protectors.***
  - ***Visually and functionally inspect the gloves before use.***
  - ***Wear the Insulation gloves with leather protectors at all times when working with the high voltage battery assembly, whether the system is energized or not.***

Failure to follow the procedures may result in serious injury or death.

Danger: This vehicle is equipped with a high voltage battery that is completely isolated from the chassis ground. Never utilize AC powered test equipment to probe the high voltage system. Serious injury, death and component damage could occur if the high voltage system is grounded through the electric utility.

Failure to follow the procedure exactly as written may result in serious injury or death.

Note: The Battery Pack will utilize an exchange program. Please consult the most recent revision of bulletin/PI #PIP5112, available in Service Information (SI), for a list of approved Battery Pack service procedures. Components that may be removed and serviced without exchanging the complete battery pack are identified in the bulletin/PI. Please contact the GM Technical Assistance Center if you have any questions.

1. Review the high voltage safety information prior to performing the High Voltage Disabling procedure. Refer to *High Voltage Safety on page 9-362*.
2. The High Voltage Disabling procedure has been performed.

⇒ **The High Voltage Disabling has not been performed**

Refer to *High Voltage Disabling on page 9-363* before continuing to the next step.

⇓ **The High Voltage Disabling has been performed**

Note: Wear your High Voltage Insulation gloves until you have determined that a high voltage exposure risk is no longer present.

3. Disconnect the X357 and X358 harness connectors at the A4 Hybrid/EV Battery Pack.
4. Connect the 12 V battery.
5. Vehicle in Service Mode, using the DMM, verify the voltage measures less than 9.5 V at the following terminals and ground:
   - Terminal 7 X358
   - Terminal 8 X358
   - Terminal 9 X358
   - Terminal 10 X358
   - Terminal 11 X358
   - Terminal 12 X358
   - Terminal 14 X358

⇒ **If 9.5 V or greater**

5.1. Vehicle OFF, disconnect the X1 and X2 harness connectors at the K114B Hybrid/EV Powertrain Control Module 2. Vehicle in Service Mode.

5.2. Test for less than 9.5 V between the control circuit terminal and ground.

⇒ If greater than 9.5 V, repair the short to voltage on the circuit.

⇒ If less than 9.5 V, replace the K114B Hybrid/EV Powertrain Control Module 2.

⇓ **If less than 9.5 V**

Note: Wear your High Voltage Insulation gloves until you have determined that a high voltage exposure risk is no longer present. UL® Listed or equivalent insulation tape rated at a minimum of 600 V can be used to protect and insulate the terminal ends.

6. Vehicle OFF, lower the battery from the vehicle. Refer to *Drive Motor Battery Replacement and Shipping Preparation on page 9-524*. There is a stuck closed contactor and a loss of isolation within the A4 Hybrid/EV Battery Pack Assembly. Replace the A28 Hybrid/EV Battery Contactor Assembly.

Repair Instructions

Perform the *Diagnostic Repair Verification on page 6-123* after completing the repair.

- *Drive Motor Battery Positive High Voltage Contactor Relay Replacement on page 9-499*
- *Drive Motor Battery Replacement and Shipping Preparation on page 9-524*
- *Control Module References on page 6-3* for the hybrid/EV powertrain control module 2 replacement, programming and setup.

Troubleshooting With an Insulation Multimeter

Special Tools

EL-50772 Insulation Multimeter

For regional equivalent tools, refer to *Special Tools on page 9-549*

Diagnosis for isolation loss requires insulation testing with high voltage potential. Special multimeters that utilize their own built-in high voltage, such as the *EL-50772* Insulation Multimeter, test the isolation capability of high voltage components and circuits. Understanding an insulation multimeter and how it functions is necessary to obtain proper test results.

How to Use the Insulation Multimeter

1. Read all instructions and warnings that came with your insulation multimeter.

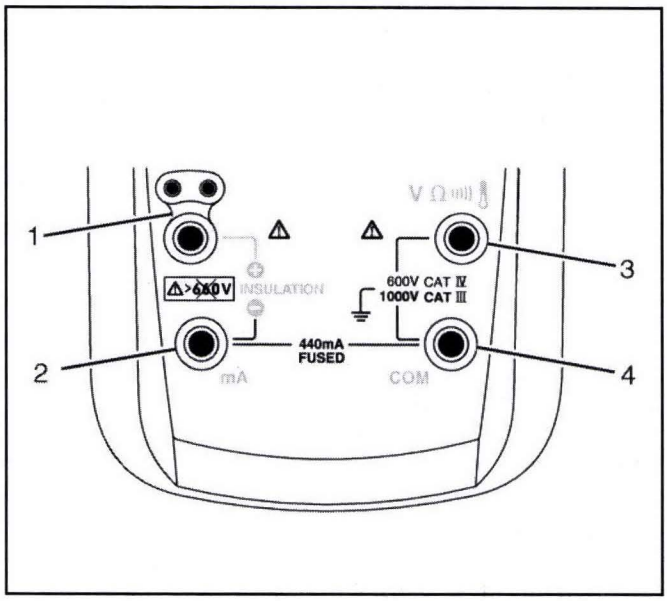

4051042

2. Plug into the correct ports (1, 2) for insulation testing. This is easy to get wrong especially if you use the *EL-50772* for standard DMM testing too. Do NOT use ports (3, 4) for insulation testing.
3. Always test at the 500V range.

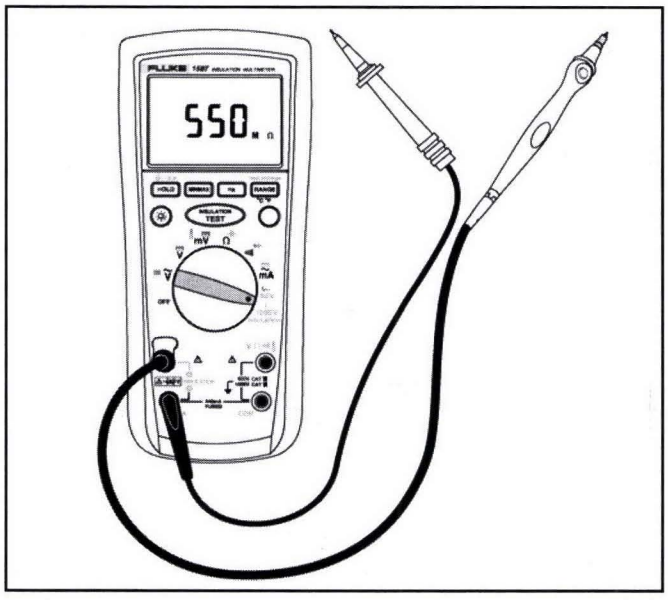

4051043

4. With the test leads not connected to anything, press and hold test button to know how your meter displays an infinite measurement. The *EL-50772* will display **550M Ω** when measuring an open circuit while set to the 500V range.

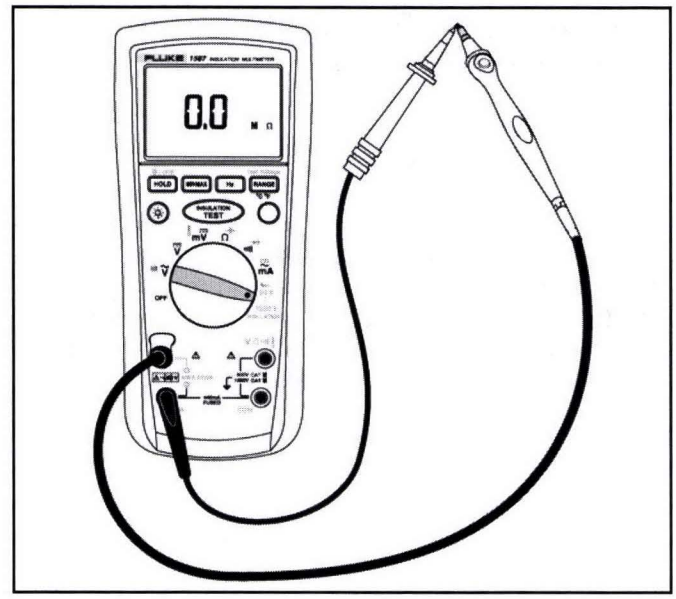

4051044

5. With the test leads connected together, press and hold test button to know how your meter displays continuity. The *EL-50772* will display **0.0 Ω**.

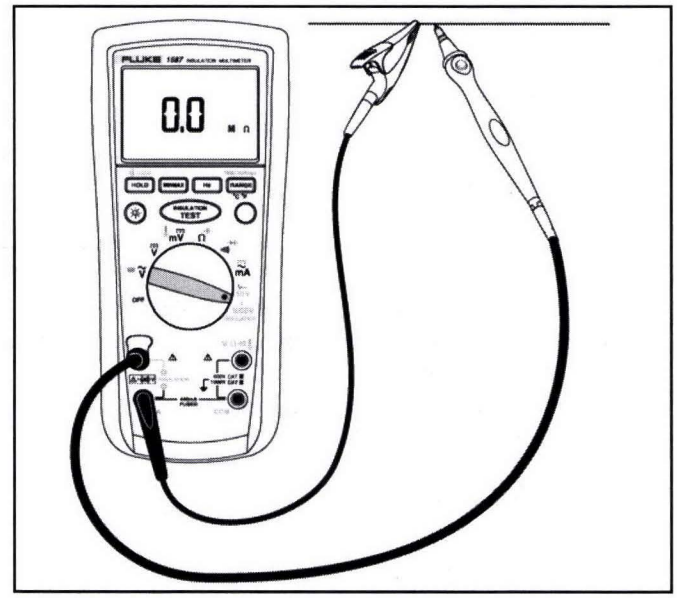

4051045

6. When performing insulation testing you need a good ground reference. When possible use an alligator clamp to attach the ground lead. Typically, the reference point will be to vehicle chassis except cable testing which requires connection to the cable shield termination at the connector and not to the chassis.
7. Verify your ground connection prior to every test measurement at a suitable ground location near your test point. The *EL-50772* should display **0.0 Ω**, indicating continuity.
8. When testing components with large capacitance or inductance, such as certain modules and larger motor stators, it may be necessary to hold the test for a few seconds until the maximum resistance value is displayed.

Rechargeable Energy Storage System Smoke Test

Special Tools

- *EL-51113* Smoke Test Adapter Kit
- *GE 41413-A* Evaporative Emissions System Tester (EEST)

For equivalent regional tools, refer to *Special Tools on page 9-549*.

1. Remove the drive motor battery from the vehicle. Refer to *Drive Motor Battery Replacement and Shipping Preparation on page 9-524*.

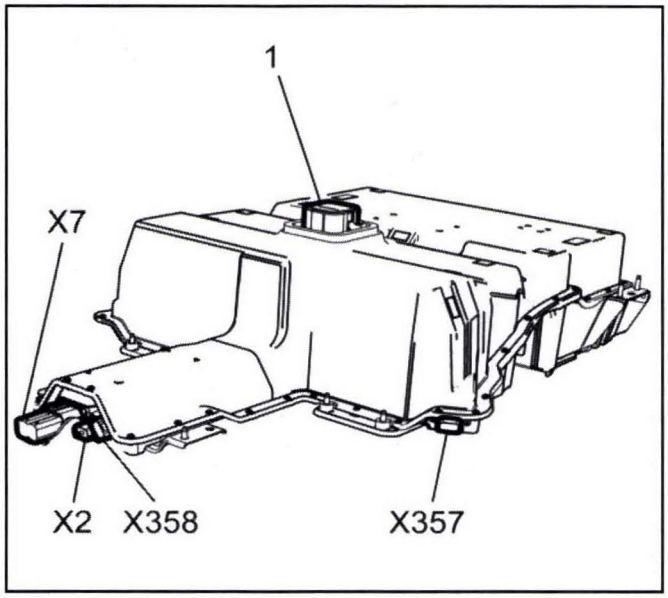

3654650

Caution: Refer to *Fastener Caution on page 0-8*.

Note: Adapters are indexed with numbers to show disconnect sequence.

2. Install the *EL-51113* Smoke Test Adapter Connectors to X2; X7; X357 and X358
3. Reinstall the S15 manual service disconnect lever (1) or seal the drive motor generator battery high voltage manual disconnect connector, using tape.

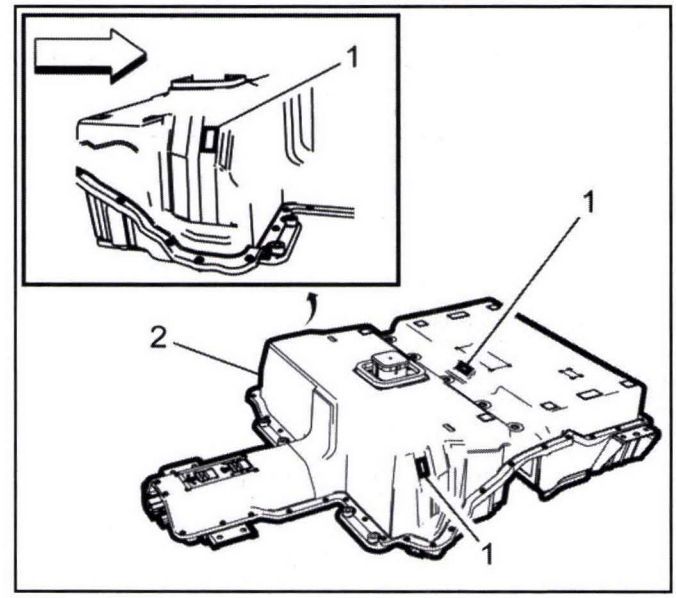

3654682

4. Cover all gore patches (1) with tape.
5. Create a small hole through one of the vent patches (1) to allow a full soak of the smoke into the drive motor battery.

   Note: It is not recommended to use the tester in an outside repair bay area because wind and sunlight may affect temperature and your ability to see the smoke.
6. Turn OFF any fans that may cause air movement around or near the drive motor battery.

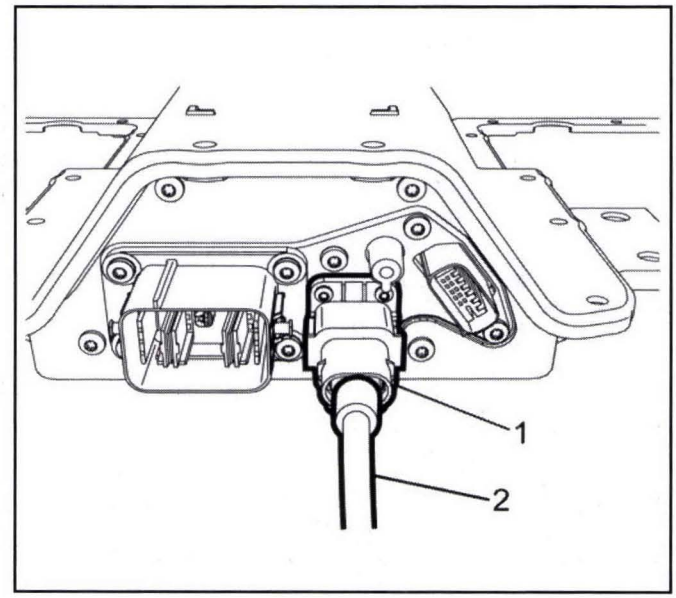

3657033

7. Install the tester hose (2) to the X2 connector adapter (1).

   Note: Completely unwind the smoke hose from the bracket for optimal tester performance.
8. Turn the nitrogen/smoke valve on the control panel to smoke.

   Note: The remote switch operates in a push ON, push OFF fashion.

9. Press and release the remote switch to activate the tester and inject smoke into the drive motor battery.

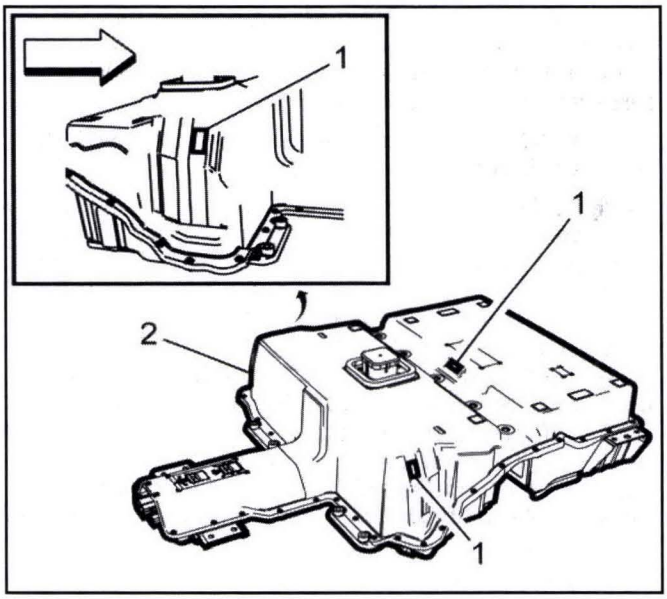

3654682

10. Soak/Fill the drive motor battery with smoke for TWO MINUTES until smoke is observed from a hole in one of the vent patches (1).
11. Once smoke in observed from the hole, press and release the remote switch to deactivate the tester to relieve the pressure within the drive motor battery.
12. Seal the hole placed in one of the vent patches (1).

    Note: For optimal visual smoke performance, deactivate the smoke flow and allow the system pressure to drop. Allowing the smoke to exit through small holes at a low flow rate greatly enhances visibility.
13. Introduce smoke into the drive motor battery for THREE MINUTES. Using a high-intensity white light, look for any visible smoke emitting anywhere from the drive motor battery.
14. Press and release the remote switch to deactivate the tester.
15. Repair any visible leaks by retightening the fasteners or by resealing any areas using butyl sealant.
16. Retest the drive motor battery, to ensure repair has been completed.
17. Remove the tape from the vents (1).
18. Open the nitrogen tank valve and turn the nitrogen/ smoke valve on the control panel to Nitrogen.
19. Press and release the remote switch to activate the tester and inject nitrogen into the drive motor battery for FIVE MINUTES, verify no smoke is coming from the vent.
20. Remove all old vents from the drive motor battery.
21. Install NEW Gore patches (P/N 20791600), replacing the old vents.
22. Disconnect the tester and remove the adapters from the drive motor battery.
23. Remove the S15 manual service disconnect lever or the tape used to seal the S15 manual service disconnect connector.
24. Install the drive motor battery. Refer to *Drive Motor Battery Replacement and Shipping Preparation on page 9-524*.

Repair Instructions

High Voltage System Inspection

Diagnostic Instructions

- Perform the *Diagnostic System Check - Vehicle on page 6-91* prior to using this diagnostic procedure.
- Review *Strategy Based Diagnosis on page 6-83* for an overview of the diagnostic approach.
- *Diagnostic Procedure Instructions on page 6-84* provides an overview of each diagnostic category.

Circuit/System Description

Vehicle Collision Detection

The supplemental inflatable restraint system supplements the protection offered by the seat belts. The supplemental inflatable restraint system contains an inflatable restraint sensing and diagnostic module, air bags, seat belt pretensioners (anchor and retractor), and impact sensors. The sensing and diagnostic module determines the severity of a collision with the assistance of impact sensors located at strategic points on the vehicle. When the sensing and diagnostic module detects a collision, the sensing and diagnostic module will process the information provided by the impact sensors to further support air bag or pretensioner deployment. The sensing and diagnostic module will deploy the air bags and pretensioners if it detects a collision of sufficient force. If the force of the impact is not sufficient to warrant air bag deployment, the sensing and diagnostic module may still deploy the seat belt pretensioners. The hybrid powertrain control module 2 will open the high voltage contactor relays and disable the vehicle whenever an supplemental inflatable restraint deployment occurs.

The supplemental inflatable restraint module transmits through serial data to the hybrid powertrain control module 2 whenever a sensor fault is detected or a collision event has been detected. The hybrid powertrain control module 2 will set a Crash Event Detected event and enter into a disable condition.

A complete inspection of the high voltage system and components must be performed if the vehicle has been involved in a collision. The Crash Event Detected condition will remain active until cleared by the hybrid powertrain control module 2 Clear Secured High Voltage DTCs output control function of the scan tool.

Reference Information

Schematic Reference

Hybrid/EV Energy Storage Schematics on page 9-348

Connector End View Reference

Component Connector End Views on page 11-455

Description and Operation

Drive Motor Battery System Description on page 9-545

Electrical Information Reference

- *Circuit Testing on page 11-871*
- *Connector Repairs on page 11-895*
- *Testing for Intermittent Conditions and Poor Connections on page 11-877*
- *Wiring Repairs on page 11-883*

DTC Type Reference

Powertrain Diagnostic Trouble Code (DTC) Type Definitions on page 6-92

Scan Tool Reference

Control Module References on page 6-3 for scan tool information

Special Tools

- *EL-48900* HEV Safety Kit
- *EL-51099* Low Voltage Jumper Harness Extension

For equivalent regional tools, refer to *Special Tools on page 9-549*

Circuit/System Testing

Danger: Always perform the High Voltage Disabling procedure prior to servicing any High Voltage component or connection. Personal Protection Equipment (PPE) and proper procedures must be followed.

The High Voltage Disabling procedure includes the following steps:

- ***Identify how to disable high voltage.***
- ***Identify how to test for the presence of high voltage.***
- ***Identify condition under which high voltage is always present and personal protection equipment (PPE) and proper procedures must be followed.***

Before working on any high voltage system, be sure to wear the following Personal Protection Equipment:

- ***Safety glasses with appropriate side shields when within 15 meters (50 feet) of the vehicle, either indoors or outdoors.***
- ***Certified and up-to-date Class "0" Insulation gloves rated at 1000V with leather protectors.***
  - ***Visually and functionally inspect the gloves before use.***
  - ***Wear the Insulation gloves with leather protectors at all times when working with the high voltage battery assembly, whether the system is energized or not.***

Failure to follow the procedures may result in serious injury or death.

Danger: High voltage circuits should only be tested using a digital multimeter (DMM) and test leads with at least a CAT III rating, such as the J 39200-A Digital Multimeter. Failure to follow the procedures may result in serious injury or death.

Danger: This vehicle is equipped with a high voltage battery that is completely isolated from the chassis ground. Never utilize AC powered test equipment to probe the high voltage system. Serious injury, death and component damage could occur if the high voltage system is grounded through the electric utility.

Failure to follow the procedure exactly as written may result in serious injury or death.

Danger: Damage to a Lithium Ion hybrid/EV battery pack could result in fire, loss of electrical isolation or exposure to high voltage. Until the high voltage system inspection has been completed, store the vehicle with hybrid/EV battery pack installed outside in a secure area away from buildings and other vehicles and protected from rain, snow and other moisture. Remove the hybrid/EV battery pack high voltage manual disconnect lever and store it in a secure place outside the vehicle. Cover the exposed high voltage opening with UL® listed, or equivalent, insulation tape rated at a minimum of 600 V.

Failure to follow these precautions could result in personal injury, death and property damage.

Inspection Procedure

1. The vehicle has been involved in a collision with body damage. Verify that the damage allows for repairs.

Danger: Damage to a Lithium Ion hybrid/EV battery pack could result in fire, loss of electrical isolation or exposure to high voltage. Store the vehicle with hybrid/EV battery pack installed or the hybrid/EV battery pack assembly outside in a secure area away from buildings and other vehicles and protected from rain, snow and other moisture until the hybrid/EV battery pack has been discharged. Remove the hybrid/EV battery pack high voltage manual disconnect lever and store it in a secure place outside the vehicle. Cover the exposed high voltage opening with UL® listed, or equivalent, insulation tape rated at a minimum of 600 V. Contact the GM Technical Assistance Center for discharge instructions prior to storage and shipping of the hybrid/EV battery pack.

Failure to follow these precautions could result in personal injury, death and property damage.

⇒ **If vehicle damage does not allow for repair**

Remove the A4 hybrid/EV battery pack from the vehicle. Refer to *Drive Motor Battery Replacement and Shipping Preparation on page 9-524*

⇓ **If vehicle damage is repairable**

2. Verify that no repairs are required for the air bags or seat belts. Refer to *Repairs and Inspections Required After a Collision on page 12-172*

⇒ **If repairs are required for the air bags or seat belts**

Refer to Air Bags Deployed Inspection.

⇓ **If repairs are not required for the air bags or seat belts**

3. Vehicle OFF, perform a visual inspection of the following high voltage components listed. Remove any covers or shields to gain access. Inspect the assembly for cracks, dents, pinched, cut or frayed high voltage DC 360 V cables, low voltage cables or other physical damage.
   - A4 Hybrid/EV Battery Pack (exterior only — includes tray)
   - T18 Battery Charger
   - T24 Battery Charger – DC (without CBT)
   - G1 Air Conditioning Compressor
   - K10 Coolant Heater Control Module
   - K1 14 V Accessory Power Module
   - T6 Power Inverter Module
   - T12 Automatic Transmission Assembly
   - The high voltage DC 360 V cable between the A4 Hybrid/EV Battery Pack and the T18 Battery Charger
   - The high voltage DC 360 V cable between the T18 Battery Charger and the X98 Hybrid/EV Battery Charger Receptacle
   - The high voltage DC 360 V cable between the T6 Power Inverter Module and the A4 Hybrid/EV Battery Pack
   - The high voltage DC 360 V cable between the T6 Power Inverter Module and the T24 Battery Charger – DC
   - The high voltage DC 360 V cable between the T6 Power Inverter Module and the M15 Drive Motor
   - The high voltage DC 360 V cable between the T6 Power Inverter Module and the G5 Transmission Fluid Pump – Electric/Auxillary
   - The high voltage DC 360 V cable between the T24 Battery Charger – DC and the G1 Air Conditioning Compressor
   - The high voltage DC 360 V cable between the T24 Battery Charger – DC and the K10 Coolant Heater Control Module
   - The high voltage DC 360 V cable between the T24 Battery Charger – DC and the K1 14 V Accessory Power Module

     Note: Perform this inspection if the vehicle equipped with RPO CBT.
   - T24 Battery Charger – DC (With CBT)
   - The high voltage DC 360 V cable between the T24 Battery Charger – DC (With CBT) and the X98 Hybrid/EV Battery Charger Receptacle.

⇒ **If physical damage is observed**

3.1. Perform the high voltage disable procedure. Refer to *High Voltage Disabling on page 9-363* . Replace all components and cables identified as damaged.

3.2. Install the S15 Manual Service Disconnect. Connect the 12 V battery. Vehicle in Service Mode.

3.3. Verify that no DTCs are set.

Refer to *Diagnostic Trouble Code (DTC) List - Vehicle on page 6-92*. Continue to next step after repairs.

3.4. With a scan tool, clear the Hybrid/EV Powertrain Control Module 2 Crash Event Detected disable condition only after all high voltage components identified as damaged have been replaced. Refer to *Clear Secured High Voltage DTCs on page 9-539*.

3.5. Perform the Repairs and Inspections Required after a Collision. Refer to *Repairs and Inspections Required After a Collision on page 12-172*.

3.6. Perform the required body repairs per the approved service procedures.

⇓ **If no physical damage is observed**

4. Vehicle in Service Mode.
5. Verify that no DTCs are set.

⇒ **If any DTC is set**

Refer to *Diagnostic Trouble Code (DTC) List - Vehicle on page 6-92*

⇓ **If no DTC is set**

6. With a scan tool, clear the Hybrid/EV Powertrain Control Module 2 Crash Event Detected disable condition only after all high voltage components identified as damaged have been replaced. Refer to *Clear Secured High Voltage DTCs on page 9-539*
7. Perform the Repairs and Inspections Required after a Collision. Refer to *Repairs and Inspections Required After a Collision on page 12-172*
8. Perform the required body repairs per the approved service procedures.

Air Bags Deployed Inspection

Danger: Damage to a Lithium Ion hybrid/EV battery pack could result in fire, loss of electrical isolation or exposure to high voltage. Store the vehicle with hybrid/EV battery pack installed or the hybrid/EV battery pack assembly outside in a secure area away from buildings and other vehicles and protected from rain, snow and other moisture until the hybrid/EV battery pack has been discharged. Remove the hybrid/EV battery pack high voltage manual disconnect lever and store it in a secure place outside the vehicle. Cover the exposed high voltage opening with UL® listed, or equivalent, insulation tape rated at a minimum of 600 V. Contact the GM Technical Assistance Center for discharge instructions prior to storage and shipping of the hybrid/EV battery pack.

Failure to follow these precautions could result in personal injury, death and property damage.

1. Perform the high voltage disable procedure. Refer to *High Voltage Disabling on page 9-363*. If vehicle damage does not allow for access to the S15 Manual Service Disconnect, disconnect the 12 V battery and remove the damaged portion of the vehicle until such time as the S15 Manual Service Disconnect can be removed and the *High Voltage Disabling on page 9-363* procedure can be completed. Remove the A4 Hybrid/EV Battery Pack from the vehicle. Refer to *Drive Motor Battery Replacement and Shipping Preparation on page 9-524*

2. Perform a visual inspection of the A4 Hybrid/EV Battery Pack for cracks, dents or other physical external damage.

⇒ **If physical damage is observed**

Replace all components identified as damaged. Continue to next step after repairs.

⇓ **If no physical damage is observed**

3. Perform a visual inspection of the following high voltage components listed. Remove any covers or shields to gain access. Inspect the assembly for cracks, dents, pinched, cut or frayed high voltage DC 360 V cables, low voltage cables or other physical damage.
   - A4 Hybrid/EV Battery Pack (exterior only — includes tray)
   - T18 Battery Charger
   - T24 Battery Charger – DC (Without CBT)
   - G1 Air Conditioning Compressor
   - K10 Coolant Heater Control Module
   - K1 14 V Accessory Power Module
   - T6 Power Inverter Module
   - T12 Automatic Transmission Assembly
   - The high voltage DC 360 V cable between the A4 Hybrid/EV Battery Pack and the T18 Battery Charger
   - The high voltage DC 360 V cable between the T18 Battery Charger and the X98 Hybrid/EV Battery Charger Receptacle
   - The high voltage DC 360 V cable between the T6 Power Inverter Module and the A4 Hybrid/EV Battery Pack
   - The high voltage DC 360 V cable between the T6 Power Inverter Module and the T24 Battery Charger – DC
   - The high voltage DC 360 V cable between the T6 Power Inverter Module and the M15 Drive Motor
   - The high voltage DC 360 V cable between the T6 Power Inverter Module and the G5 Transmission Fluid Pump – Electric/Auxillary
   - The high voltage DC 360 V cable between the T24 Battery Charger – DC and the G1 Air Conditioning Compressor
   - The high voltage DC 360 V cable between the T24 Battery Charger – DC and the K10 Coolant Heater Control Module
   - The high voltage DC 360 V cable between the T24 Battery Charger – DC and the K1 14 V Accessory Power Module

   Note: Perform this inspection if the vehicle equipped with RPO CBT.
   - T24 Battery Charger – DC (With CBT)
   - The high voltage DC 360 V cable between the T24 Battery Charger – DC (With CBT) and the X98 Hybrid/EV Battery Charger Receptacle

⇒ **If physical damage is observed**

3.1. Perform the appropriate high voltage disable procedure. Refer to *High Voltage Disabling on page 9-363*. Replace all components and cables identified as damaged.

3.2. Install the *EL-51099* Low Voltage Jumper Harness Extension.

3.3. Install the S15 Manual Service Disconnect, connect the 12 V battery. Vehicle in Service Mode.

3.4. Verify that no DTCs are set. If any DTC is set, refer to *Diagnostic Trouble Code (DTC) List - Vehicle on page 6-92*. Continue to next step after repairs are complete.

3.5. With a scan tool, clear the Hybrid/EV Powertrain Control Module 2 Crash Event Detected disable condition only after all high voltage components identified as damaged have been replaced. Refer to *Clear Secured High Voltage DTCs on page 9-539*.

3.6. Perform the Repairs and Inspections Required after a Collision. Refer to *Repairs and Inspections Required After a Collision on page 12-172*.

3.7. Perform the required body repairs per the approved service procedures.

⇓ **If no physical damage is observed**

4. Install the *EL-51099* Low Voltage Jumper Harness Extension.
5. Install the S15 Manual Service Disconnect, connect the 12 V battery. Vehicle in Service Mode.
6. Verify that no DTCs are set.

⇒ **If any DTC is set**

Refer to *Diagnostic Trouble Code (DTC) List - Vehicle on page 6-92*. Continue to next step after repairs are complete.

⇓ **If no DTC is set**

7. With a scan tool, clear the Hybrid/EV Powertrain Control Module 2 Crash Event Detected disable condition only after all high voltage components identified as damaged have been replaced. Refer to *Clear Secured High Voltage DTCs on page 9-539*.
8. Perform the Repairs and Inspections Required after a Collision. Refer to *Repairs and Inspections Required After a Collision on page 12-172*.
9. Perform the required body repairs per the approved service procedures.

Drive Motor Battery High Voltage Manual Disconnect Lever Replacement

Removal Procedure

Danger: Always perform the High Voltage Disabling procedure prior to servicing any High Voltage component or connection. Personal Protection Equipment (PPE) and proper procedures must be followed.

The High Voltage Disabling procedure includes the following steps:

- ***Identify how to disable high voltage.***
- ***Identify how to test for the presence of high voltage.***
- ***Identify condition under which high voltage is always present and personal protection equipment (PPE) and proper procedures must be followed.***

Before working on any high voltage system, be sure to wear the following Personal Protection Equipment:

- ***Safety glasses with appropriate side shields when within 15 meters (50 feet) of the vehicle, either indoors or outdoors.***
- ***Certified and up-to-date Class "0" Insulation gloves rated at 1000V with leather protectors.***
  - ***Visually and functionally inspect the gloves before use.***
  - ***Wear the Insulation gloves with leather protectors at all times when working with the high voltage battery assembly, whether the system is energized or not.***

Failure to follow the procedures may result in serious injury or death.

1. *Rear Seat Cushion Removal and Installation on page 13-21*» Remove

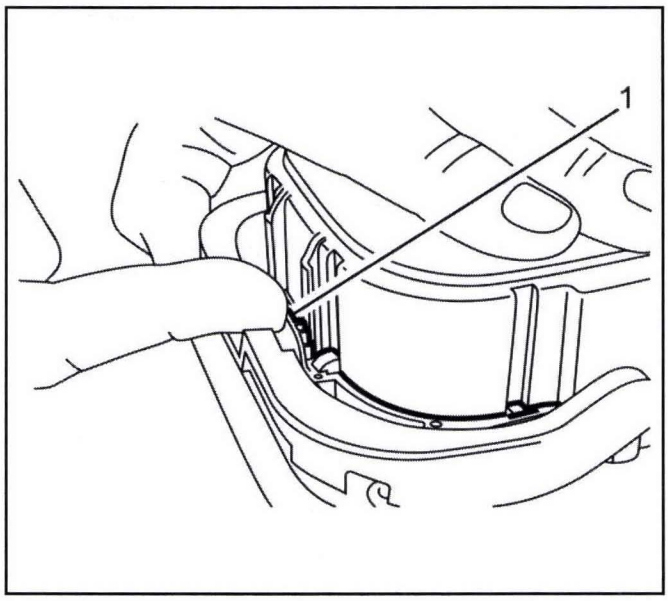

4233693

2. Release the button. (1)

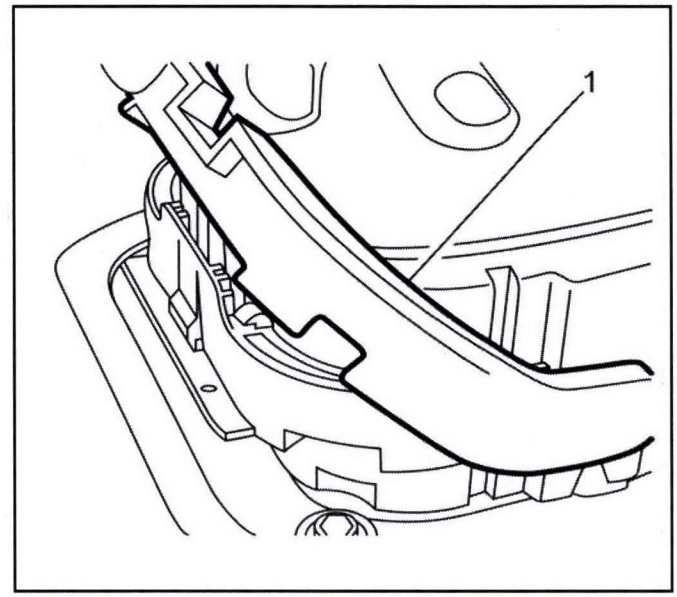

4233694

3. Drive Motor High Voltage Manual Disconnect Lever (1) » L ift Upwards

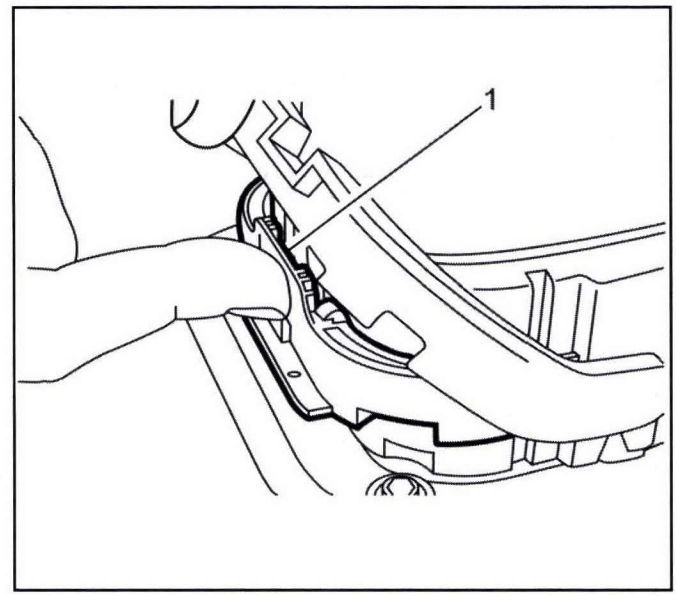

4233697

4. Release the button. (1)

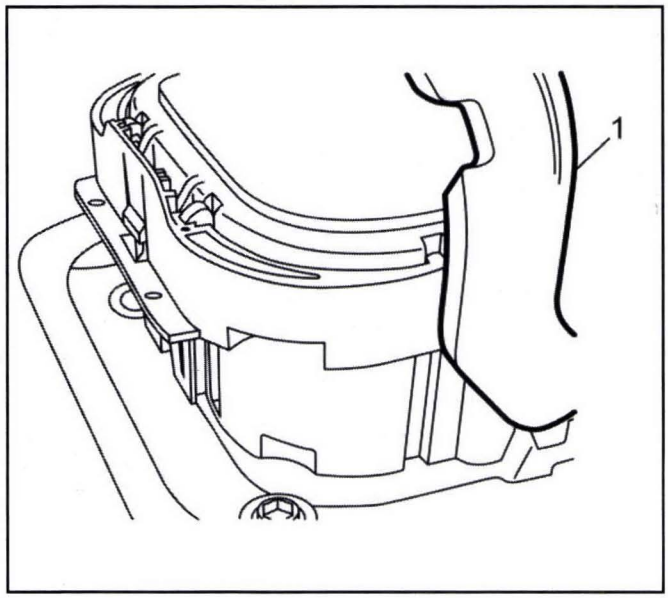

4233699

5. Drive Motor High Voltage Manual Disconnect Lever (1) » L ift Upwards

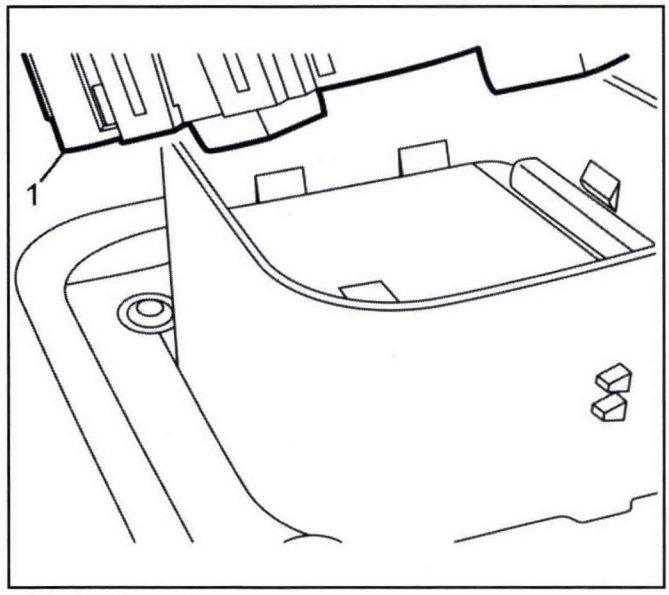

4233702

6. Drive Motor Battery High Voltage Manual Disconnect Lever (1) » Remove

Installation Procedure

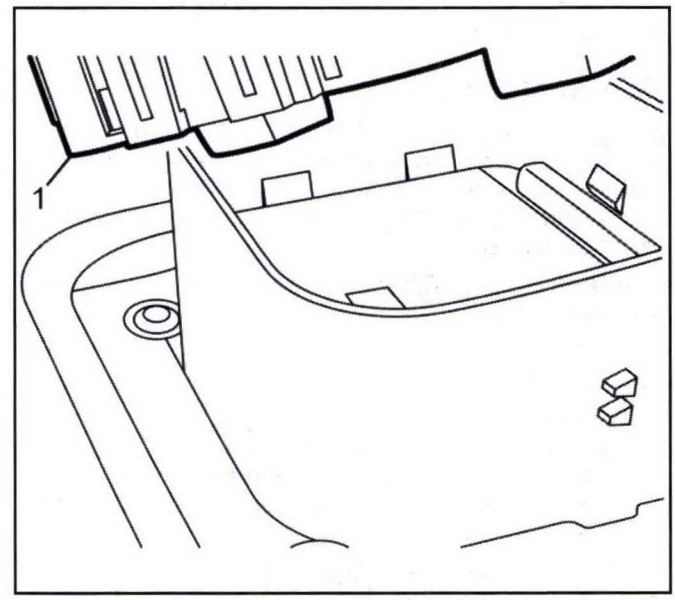

4233702

1. Drive Motor Battery High Voltage Manual Disconnect Lever (1) » Install

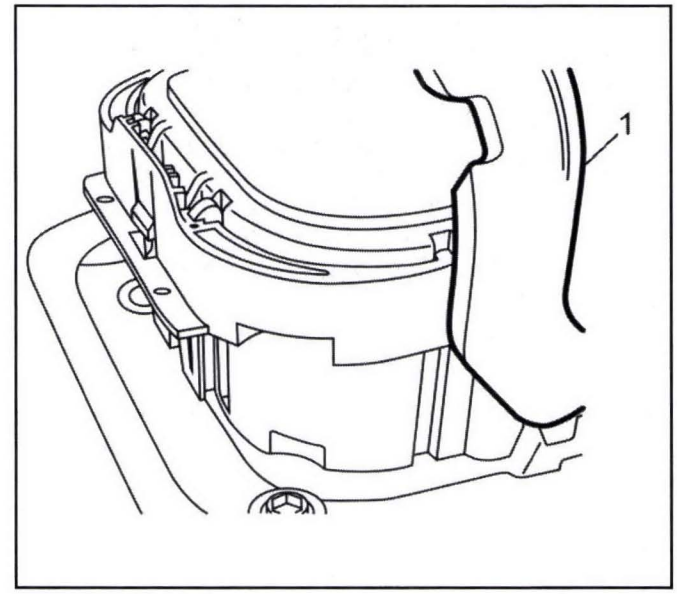

4233699

2. Drive Motor High Voltage Manual Disconnect Lever (1) » Engage

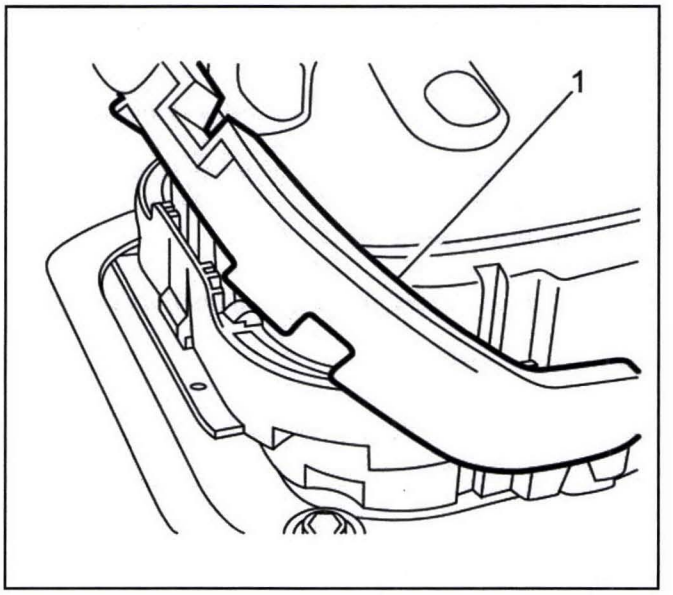

4233694

3. Drive Motor High Voltage Manual Disconnect Lever (1) » Engage
4. *Rear Seat Cushion Removal and Installation on page 13-21*» Install
5. *High Voltage Enabling on page 9-367*» Enable

High Voltage Battery High Voltage Manual Disconnect Connector Replacement

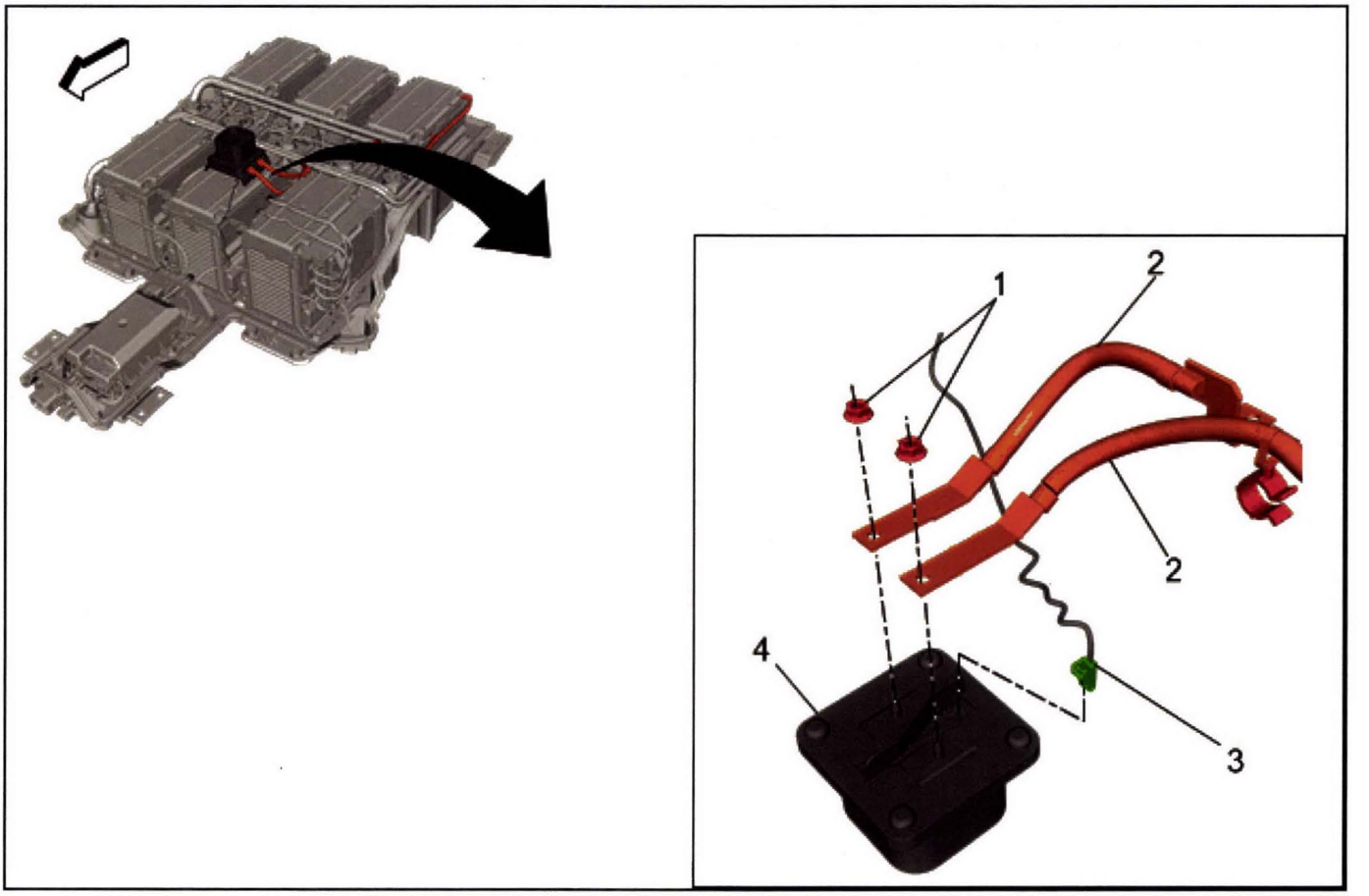

3708396

High Voltage Battery High Voltage Manual Disconnect Connector Replacement

Callout	Component Name
Danger: Ensure all High Voltage safety procedures are followed. Failure to follow the procedure exactly as written may result in serious injury or death. ***Danger: Before working on any high voltage system, be sure to wear the following Personal Protection Equipment:*** • ***Safety glasses with appropriate side shields when within 50 feet of the vehicle, either indoors or outdoors*** • ***Certified and up-to-date Class "0" Insulation gloves rated at 1000V with leather protectors*** – ***Visually and functionally inspect the gloves before use.*** – ***Wear the Insulation gloves at all times when working with the high voltage battery assembly, whether the system is energized or not.*** ***Failure to follow the procedure exactly as written may result in serious injury or death.*** **Preliminary Procedures** 1. Remove the drive motor battery. Refer to *Drive Motor Battery Replacement and Shipping Preparation on page 9-524*. 2. Remove the drive motor battery cover. Refer to *Drive Motor Battery Cover Replacement on page 9-449*.	
1	High Voltage Battery Disconnect Cable Fasteners (Qty: 2) **Caution:** Refer to *Fastener Caution on page 0-8*. **Note:** Critical high voltage fastener. Perform second torque verification check following re-assembly. **Tighten:** 9 N•m (80 lb in)
2	High Voltage Battery Disconnect Cables (Qty: 2) **Note:** Cover the high voltage battery disconnect cable terminals with protective tape when removing.
3	Auxiliary Battery Wiring Harness Connector
4	Drive Motor Generator Battery High Voltage Manual Disconnect Connector **Procedure** **Note:** Cover the high voltage battery disconnect cable terminals with protective tape when removing. 1. Disconnect any harness/cable retainers in order to provide underneath connector access. 2. Flip over the drive motor generator battery high voltage manual disconnect connector.

Drive Motor Battery Cover Replacement

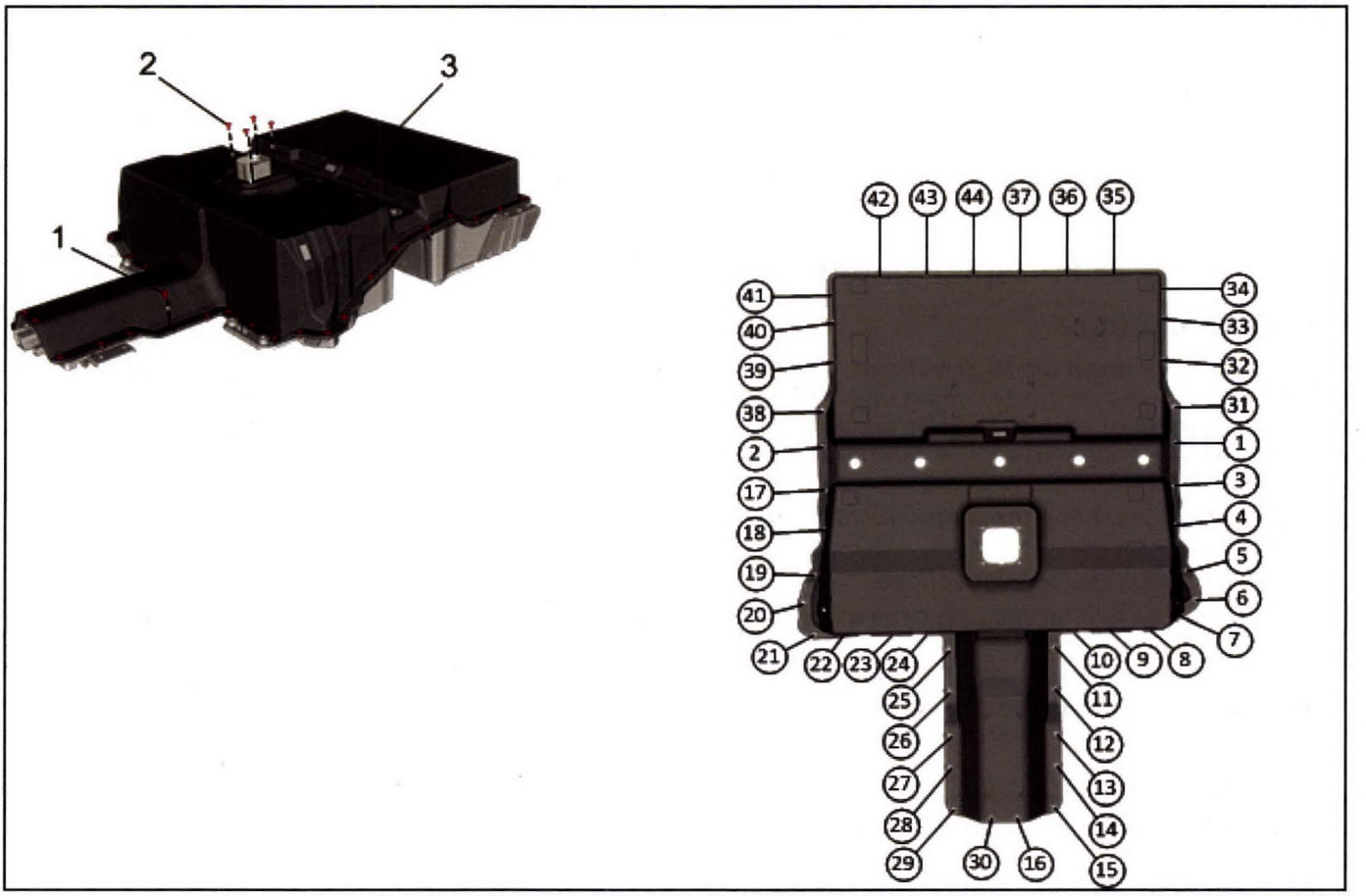

3704753

Drive Motor Battery Cover Replacement

Callout	Component Name
Danger: Ensure all High Voltage safety procedures are followed. Failure to follow the procedure exactly as written may result in serious injury or death. ***Danger: Before working on any high voltage system, be sure to wear the following Personal Protection Equipment:*** • ***Safety glasses with appropriate side shields when within 50 feet of the vehicle, either indoors or outdoors*** • ***Certified and up-to-date Class "0" Insulation gloves rated at 1000V with leather protectors*** – ***Visually and functionally inspect the gloves before use.*** – ***Wear the Insulation gloves at all times when working with the high voltage battery assembly, whether the system is energized or not.*** ***Failure to follow the procedure exactly as written may result in serious injury or death.*** **Preliminary Procedure** Remove the drive motor battery. Refer to *Drive Motor Battery Replacement and Shipping Preparation on page 9-524*.	
1	Drive Motor Battery Cover Fasteners (Qty: 44) **Caution:** Refer to *Fastener Caution on page 0-8*. **Tighten:** 4.7 N•m (42 lb in) **Procedure** Tighten the drive motor battery cover fasteners in the sequence shown in the graphic above.
2	Drive Motor Battery High Voltage Disconnect Connector Fasteners (Qty: 4) **Tighten:** 9 N•m (80 lb in)

Drive Motor Battery Cover Replacement (cont'd)

Callout	Component Name
3	Drive Motor Battery Cover **Procedure** 1. Perform the rechargeable energy storage system smoke test. Refer to *Rechargeable Energy Storage System Smoke Test on page 9-440*. 2. Perform the hybrid/EV battery system verification. Refer to *Hybrid/EV Battery System Verification on page 9-543*.

Battery Cover Seal Replacement

Removal Procedure

Danger: Always perform the High Voltage Disabling procedure prior to servicing any High Voltage component or connection. Personal Protection Equipment (PPE) and proper procedures must be followed.

The High Voltage Disabling procedure includes the following steps:

- ***Identify how to disable high voltage.***
- ***Identify how to test for the presence of high voltage.***
- ***Identify condition under which high voltage is always present and personal protection equipment (PPE) and proper procedures must be followed.***

Before working on any high voltage system, be sure to wear the following Personal Protection Equipment:

- ***Safety glasses with appropriate side shields when within 15 meters (50 feet) of the vehicle, either indoors or outdoors.***
- ***Certified and up-to-date Class "0" Insulation gloves rated at 1000V with leather protectors.***
  - ***Visually and functionally inspect the gloves before use.***
  - ***Wear the Insulation gloves with leather protectors at all times when working with the high voltage battery assembly, whether the system is energized or not.***

Failure to follow the procedures may result in serious injury or death.

1. Disable the high voltage system. Refer to *High Voltage Disabling on page 9-363*.
2. Remove the drive motor battery. Refer to *Drive Motor Battery Replacement and Shipping Preparation on page 9-524*.
3. Remove the drive motor battery cover. Refer to *Drive Motor Battery Cover Replacement on page 9-449*.

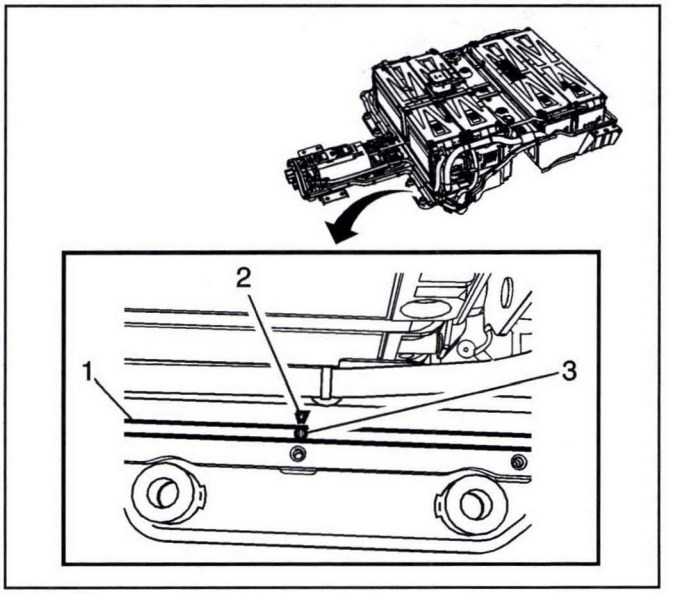

3604561

4. The drive motor battery cover seal (1) has alignment marks (3) which are aligned with the markers (2) on the tray.
5. Lift up on the drive motor battery cover seal (1) from around the battery tray.

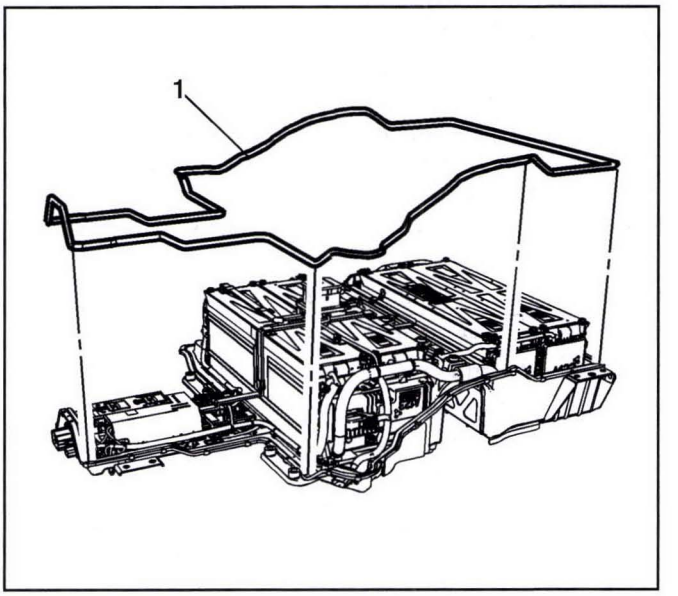

3604564

6. Remove the drive motor battery cover seal (1) from the tray.

Installation Procedure

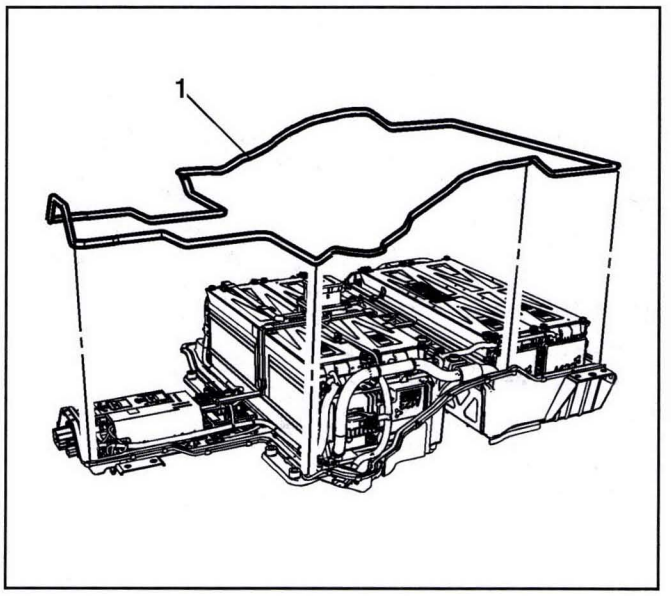

3604564

1. Place the NEW seal into position around the battery tray.

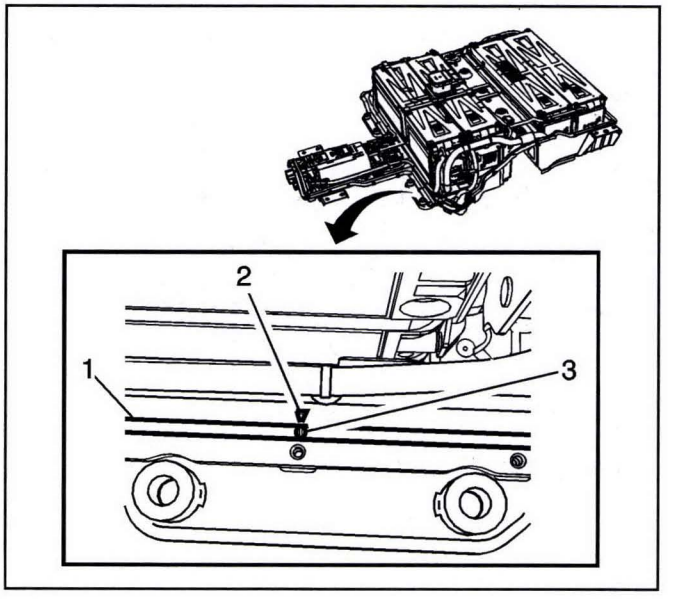

3604561

2. Align the seal markers (3) with the markers (2) around the drive motor battery tray.

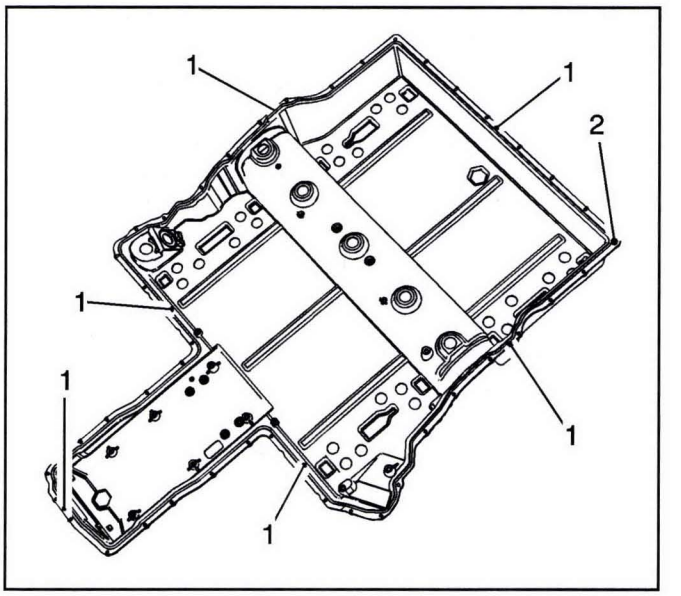

3604559

3. Working your way around the drive motor battery tray, align the seal markers with the markers (1) on the drive motor battery tray (2).
4. Install the drive motor battery cover. Refer to *Drive Motor Battery Cover Replacement on page 9-449*.
5. Install the drive motor battery. Refer to *Drive Motor Battery Replacement and Shipping Preparation on page 9-524*.

Battery Energy Control Module Replacement

Removal Procedure

Danger: Always perform the High Voltage Disabling procedure prior to servicing any High Voltage component or connection. Personal Protection Equipment (PPE) and proper procedures must be followed.

The High Voltage Disabling procedure includes the following steps:

- ***Identify how to disable high voltage.***
- ***Identify how to test for the presence of high voltage.***
- ***Identify condition under which high voltage is always present and personal protection equipment (PPE) and proper procedures must be followed.***

Before working on any high voltage system, be sure to wear the following Personal Protection Equipment:

- ***Safety glasses with appropriate side shields when within 15 meters (50 feet) of the vehicle, either indoors or outdoors.***

- ***Certified and up-to-date Class "0" Insulation gloves rated at 1000V with leather protectors.***
  - ***Visually and functionally inspect the gloves before use.***
  - ***Wear the Insulation gloves with leather protectors at all times when working with the high voltage battery assembly, whether the system is energized or not.***

Failure to follow the procedures may result in serious injury or death.

1. Remove the drive motor battery. Refer to *Drive Motor Battery Replacement and Shipping Preparation on page 9-524*.
2. Remove the drive motor battery cover. Refer to *Drive Motor Battery Cover Replacement on page 9-449*.

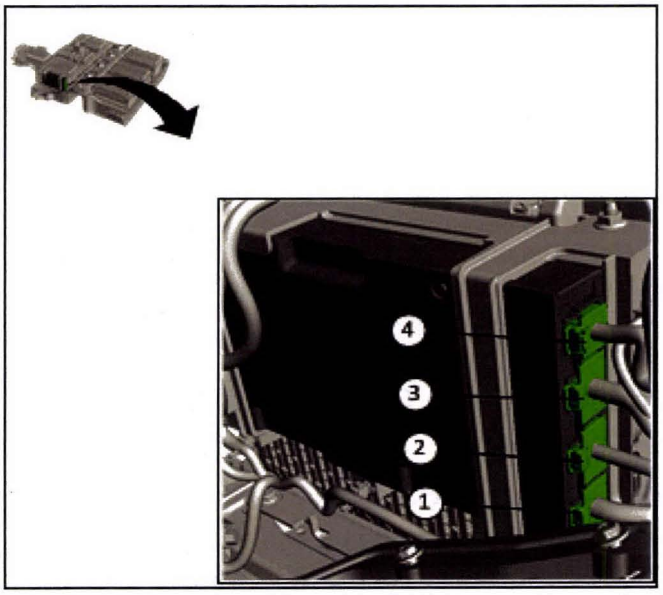

4072888

3. Disconnect the battery energy control module connectors in the sequence shown.

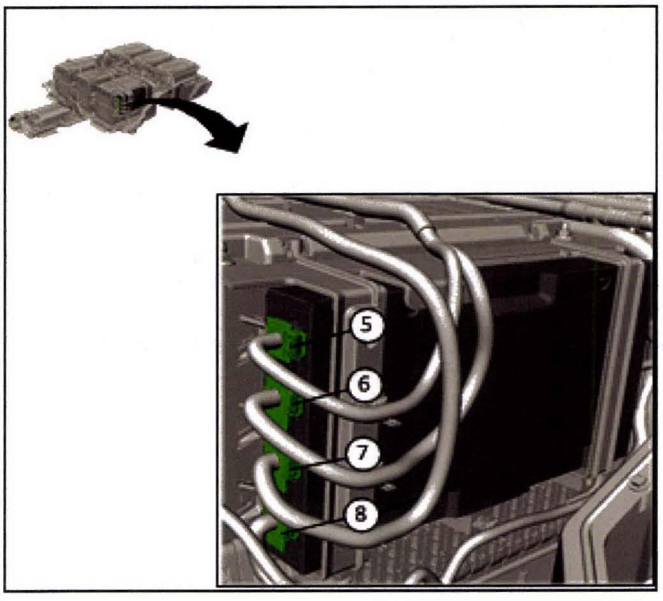

4072891

4. Disconnect the battery energy control module connectors in the sequence shown.

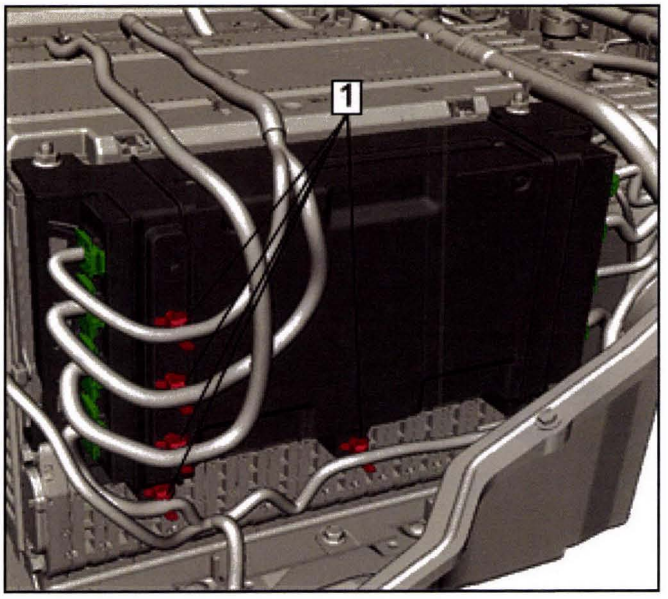

4072896

5. Disconnect the harness retainers (1) from the battery energy control module bracket.

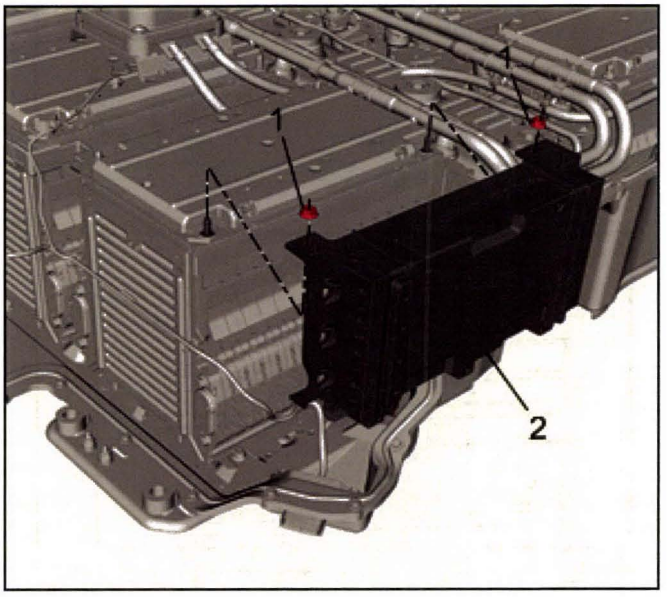

3712206

6. Remove the battery energy control module fasteners (1) and remove the battery energy control module (2).

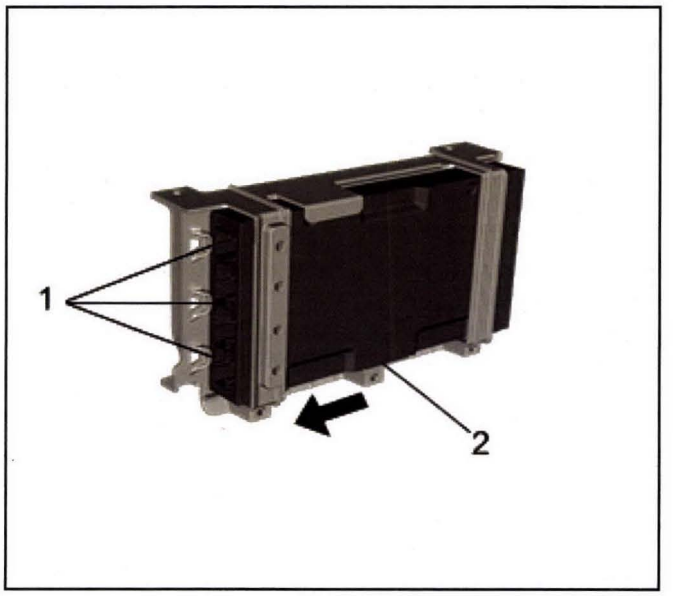

3712293

7. Release the bracket tabs (1) and slide the battery energy control module (2) forward.

Installation Procedure

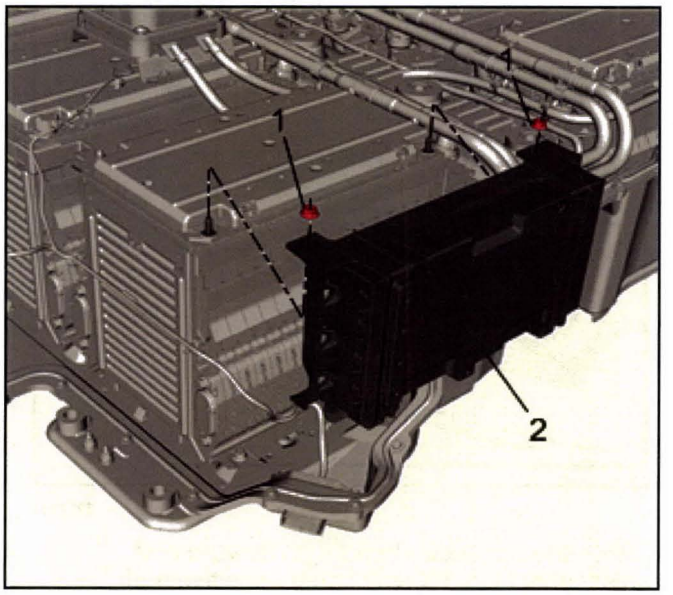

3712206

Caution: Refer to *Fastener Caution on page 0-8*.

1. Install the battery energy control module (2) to the mounting studs and tighten the fasteners (1) to **9** N•m **(80 lb in)**.

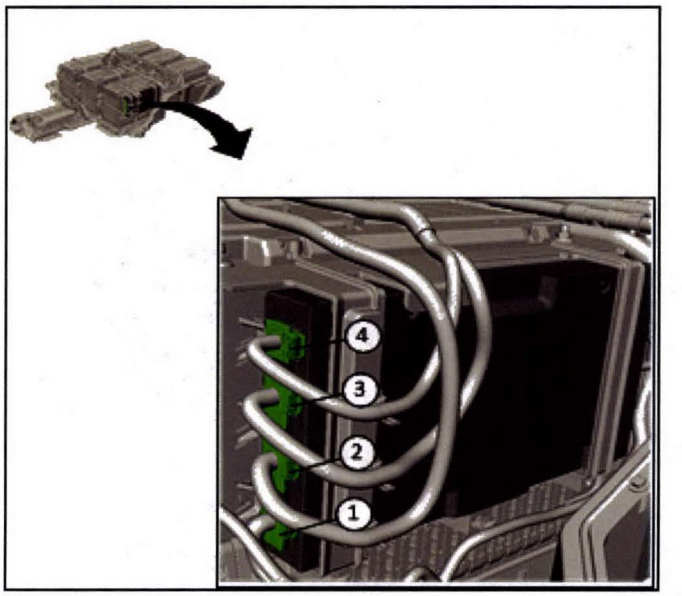

4072893

Note: Damage to the battery energy control module may occur if connector sequence to the module is not followed.

2. Connect the battery energy control module connectors in the sequence shown to the battery energy control module.

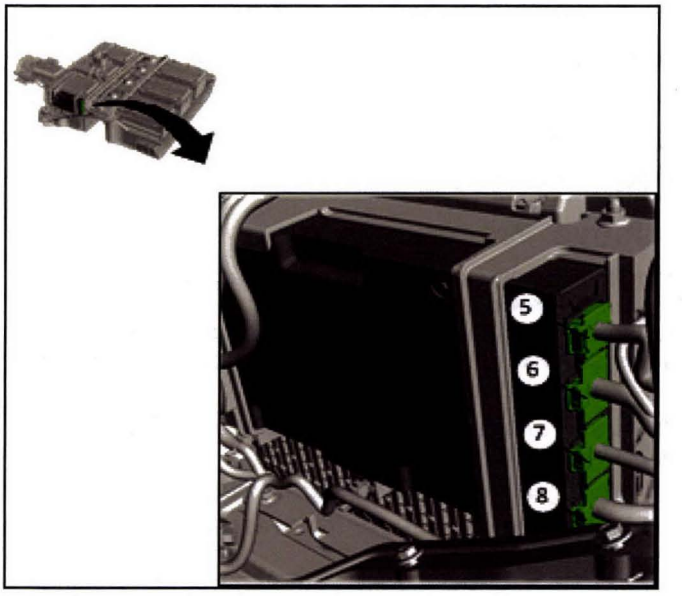

4072895

Note: Damage to the battery energy control module may occur if connector sequence to the module is not followed.

3. Connect the battery energy control module connectors in the sequence shown to the battery energy control module.

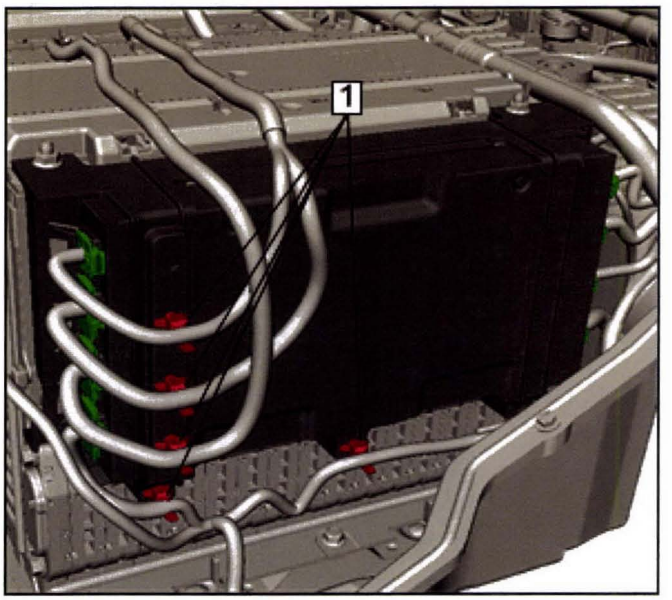

4072896

4. Connect the harness retainers (1) to the battery energy control module bracket.
5. Install the drive motor battery cover. Refer to *Drive Motor Battery Cover Replacement on page 9-449*.
6. Install the drive motor battery. Refer to *Drive Motor Battery Replacement and Shipping Preparation on page 9-524*.

300-Volt Battery Positive and Negative Cable Replacement (Drive Motor Generator Power Inverter Module to Drive Motor Battery)

Removal Procedure

Danger: Always perform the High Voltage Disabling procedure prior to servicing any High Voltage component or connection. Personal Protection Equipment (PPE) and proper procedures must be followed.

The High Voltage Disabling procedure includes the following steps:

- ***Identify how to disable high voltage.***
- ***Identify how to test for the presence of high voltage.***
- ***Identify condition under which high voltage is always present and personal protection equipment (PPE) and proper procedures must be followed.***

Before working on any high voltage system, be sure to wear the following Personal Protection Equipment:

- ***Safety glasses with appropriate side shields when within 15 meters (50 feet) of the vehicle, either indoors or outdoors.***
- ***Certified and up-to-date Class "0" Insulation gloves rated at 1000V with leather protectors.***
  - ***Visually and functionally inspect the gloves before use.***
  - ***Wear the Insulation gloves with leather protectors at all times when working with the high voltage battery assembly, whether the system is energized or not.***

Failure to follow the procedures may result in serious injury or death.

1. Disable the high voltage system. Refer to *High Voltage Disabling on page 9-363*.
2. Remove the high voltage disconnect circuit cover. Refer to *High Voltage Disconnect Circuit Connector Cover Replacement on page 9-174*.
3. Remove the underbody front air deflector - left side. Refer to *Underbody Front Air Deflector Replacement - Left Side on page 3-127*.
4. Remove the underbody front air deflector. Refer to *Underbody Front Air Deflector Replacement (Center) on page 3-126*.

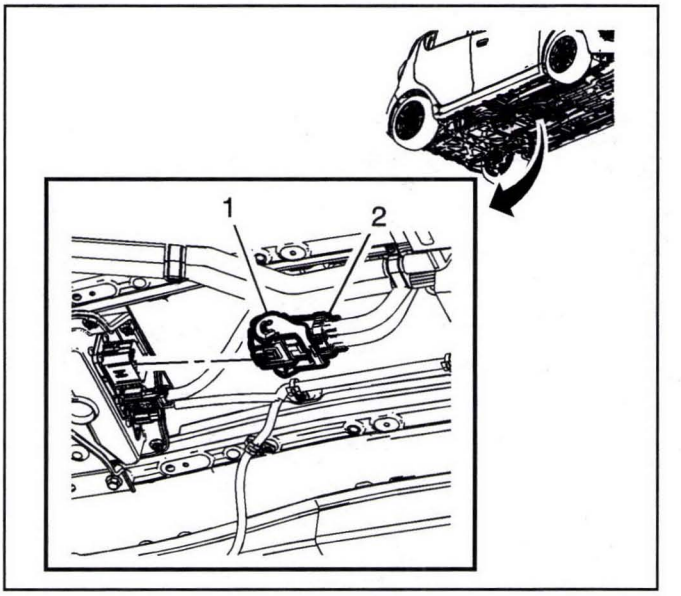

3232197

5. Slide the connector handle (1) forward and disconnect the 300 volt battery positive and negative cable connector (2), from the drive motor battery.

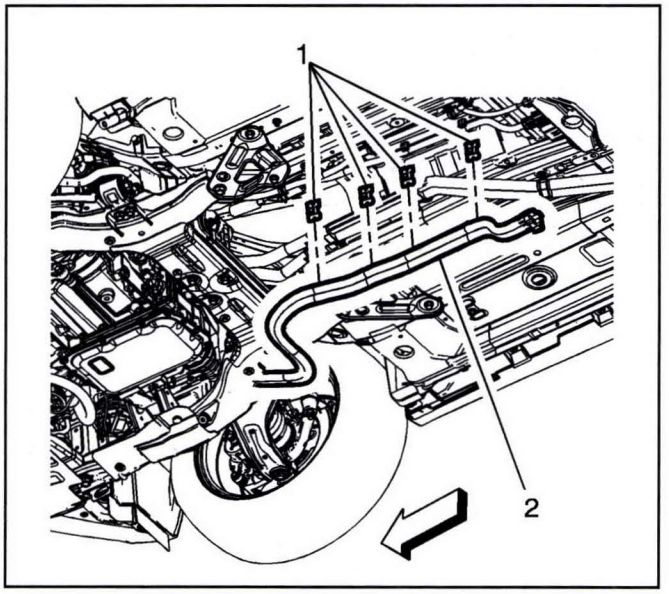

3232209

6. Remove the 300 volt battery positive and negative cable retainers (1), from the floor panel tunnel.

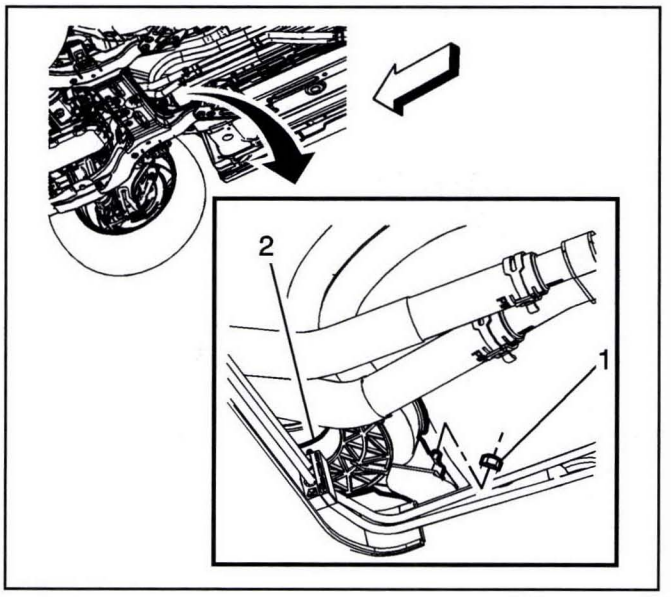

3232208

7. Remove the lower conduit retainer fastener (1) and detach the lower conduit retainer bracket (2), from the stud.

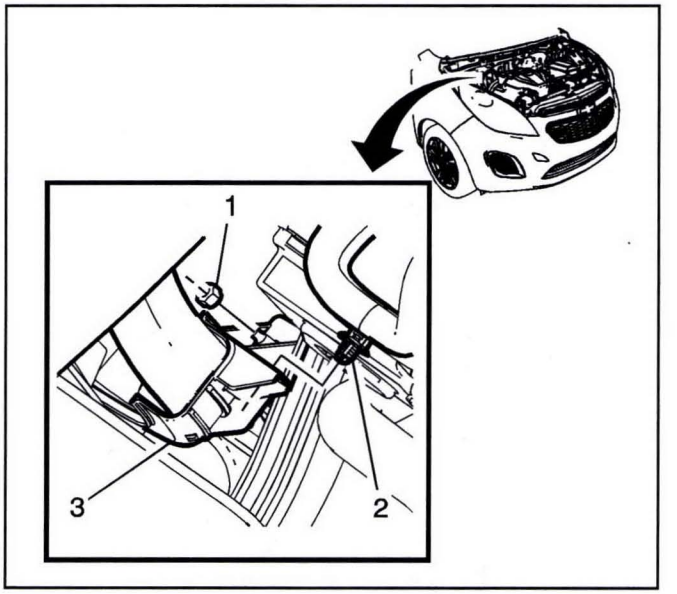

3232207

8. Detach the APM cable retainer (2) from the upper conduit retainer bracket (3).
9. Remove the upper conduit retainer fastener (1) and detach the upper conduit retainer bracket (3), from the stud.

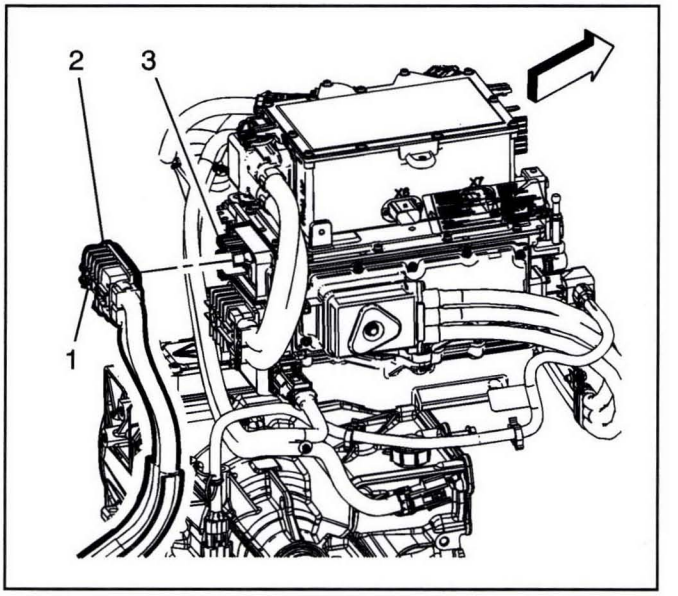

3232206

10. Loosen the 300 volt battery positive and negative cable fastener (1) and disconnect the connector (2), from the drive motor generator power inverter module (3).
11. Remove the 300 volt battery positive and negative cable (2) from the vehicle.

Installation Procedure

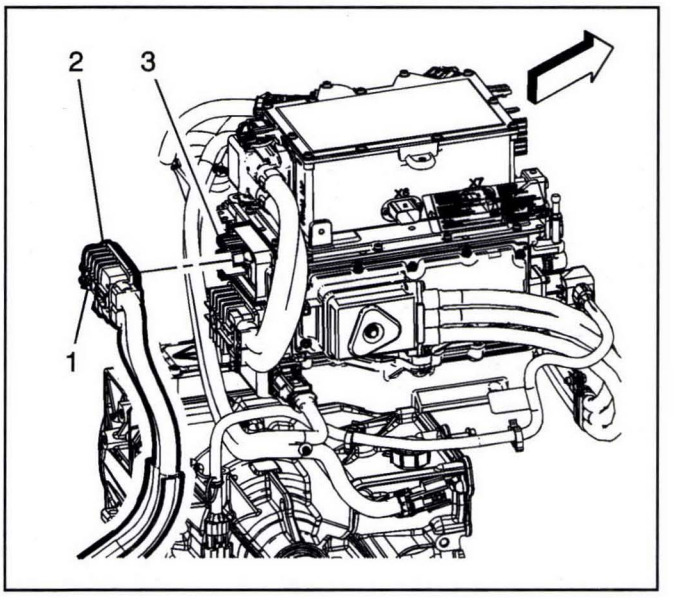

3232206

Caution: Refer to *Fastener Caution on page 0-8*.

1. Connect the 300 volt battery positive and negative cable (2), to the drive motor generator power inverter module (3), and tighten the fastener (1) to **9** N•m **(80 lb in)**.

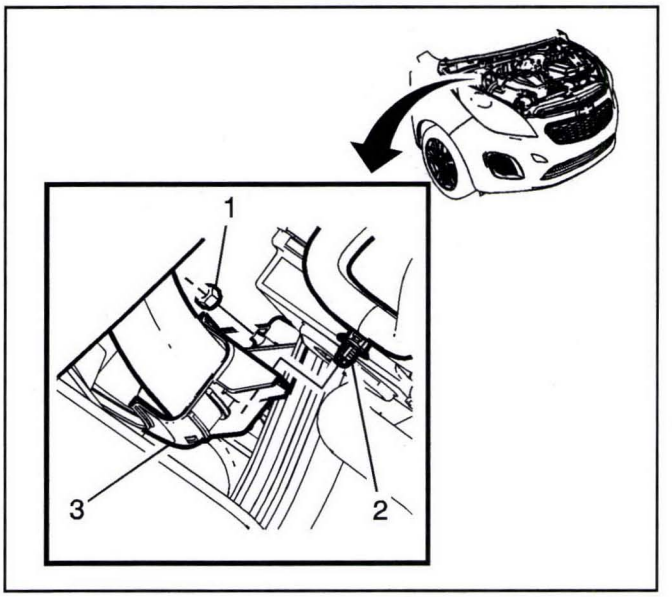

3232207

2. Install the upper conduit retainer bracket (3), onto the stud, and tighten the fastener (1) to **9** N•m **(80 lb in)**.
3. Attach the APM cable retainer (2) to the upper conduit.

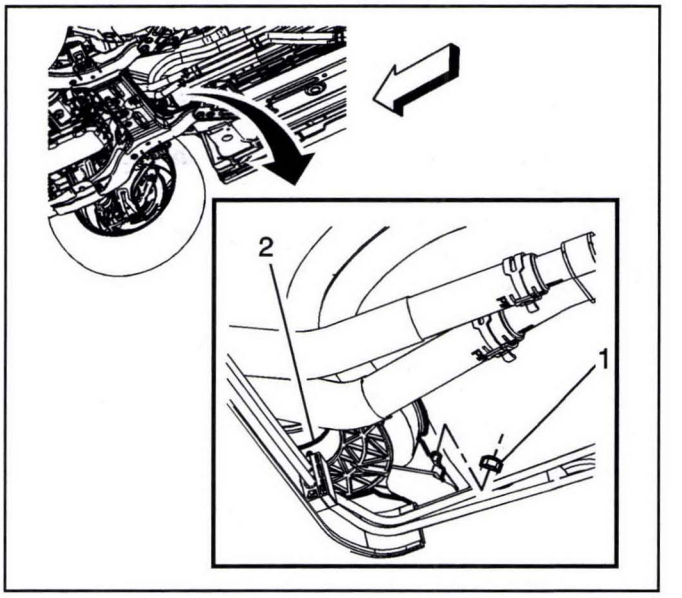

3232208

4. Install the lower conduit retainer bracket (2), to the stud, and tighten the fastener (1) to **9** N•m **(80 lb in)**.

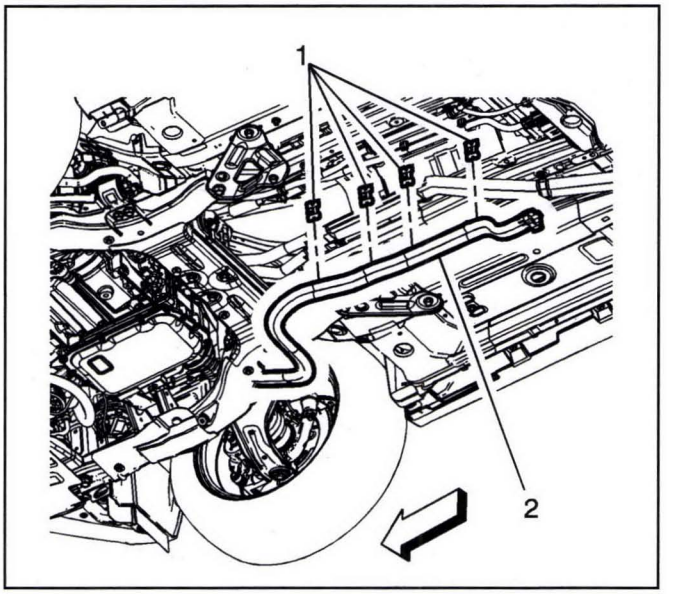

3232209

5. Attach the 300 volt battery positive and negative cable retainers (1) to the floor tunnel panel.

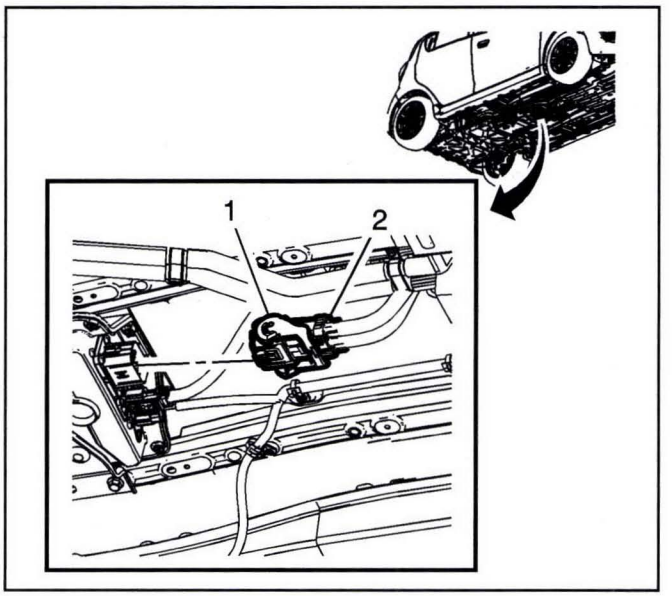

3232197

6. Connect the 300 volt battery positive and negative cable connector (2) to the drive motor battery.
7. Install the underbody front air deflector. Refer to *Underbody Front Air Deflector Replacement (Center) on page 3-126*.
8. Install the underbody front air deflector - left side. Refer to *Underbody Front Air Deflector Replacement - Left Side on page 3-127*.
9. Install the high voltage disconnect circuit cover. Refer to *High Voltage Disconnect Circuit Connector Cover Replacement on page 9-174*.
10. Enable the high voltage system. Refer to *High Voltage Enabling on page 9-367*.

300-Volt Battery Positive and Negative Cable Replacement (Drive Motor Generator Power Inverter Module to High Voltage Battery Disconnect Module)

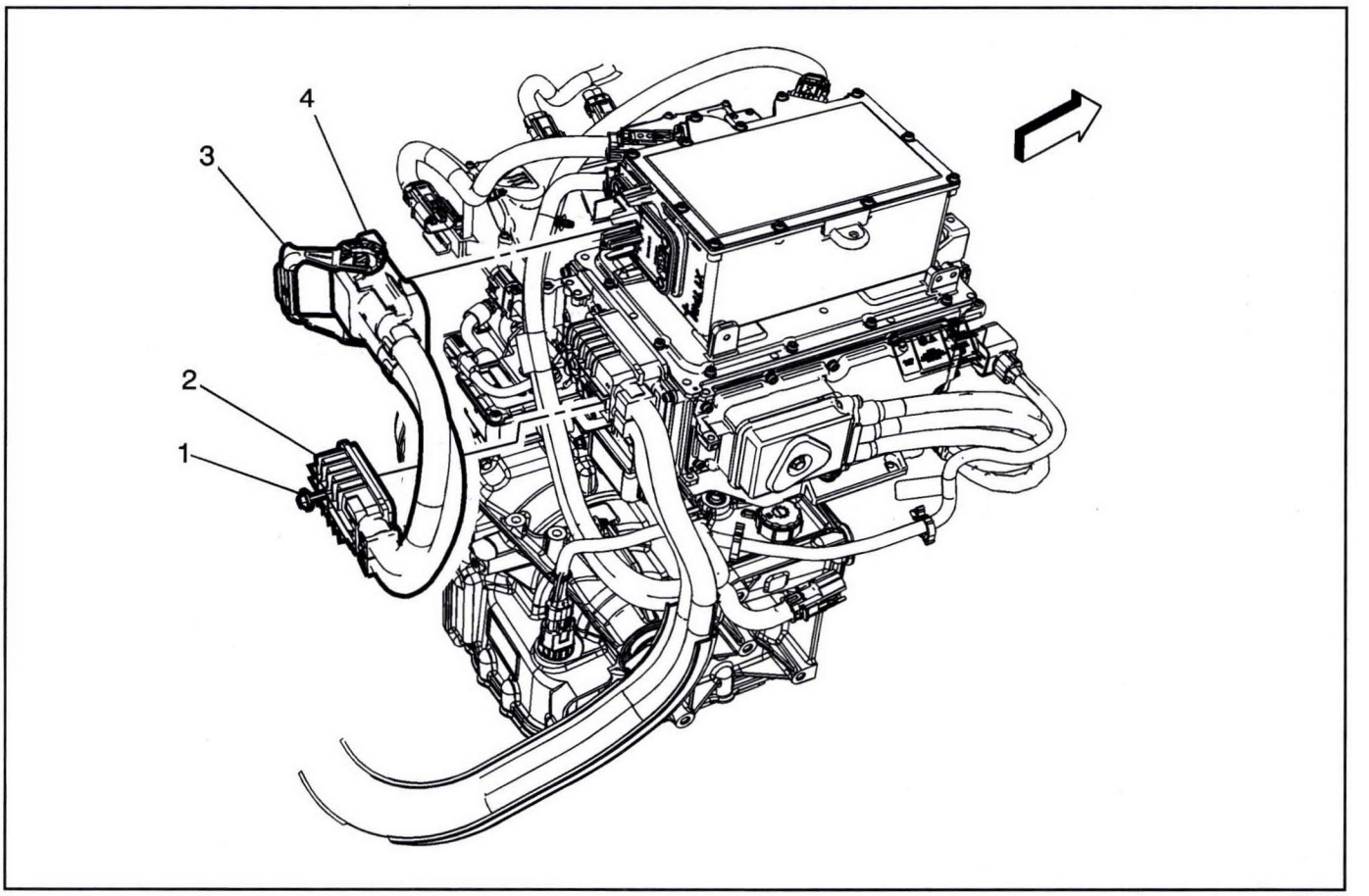

3604565

300-Volt Battery Positive and Negative Cable Replacement (Drive Motor Generator Power Inverter Module to High Voltage Battery Disconnect Module)

Callout	Component Name
Danger: Always perform the High Voltage Disabling procedure prior to servicing any High Voltage component or connection. Personal Protection Equipment (PPE) and proper procedures must be followed. ***The High Voltage Disabling procedure includes the following steps:*** • ***Identify how to disable high voltage.*** • ***Identify how to test for the presence of high voltage.*** • ***Identify condition under which high voltage is always present and personal protection equipment (PPE) and proper procedures must be followed.*** ***Before working on any high voltage system, be sure to wear the following Personal Protection Equipment:*** • ***Safety glasses with appropriate side shields when within 15 meters (50 feet) of the vehicle, either indoors or outdoors.*** • ***Certified and up-to-date Class "0" Insulation gloves rated at 1000V with leather protectors.*** – ***Visually and functionally inspect the gloves before use.*** – ***Wear the Insulation gloves with leather protectors at all times when working with the high voltage battery assembly, whether the system is energized or not.*** ***Failure to follow the procedures may result in serious injury or death.*** **Preliminary Procedure** 1. Disable the high voltage system. Refer to *High Voltage Disabling on page 9-363*. 2. Remove the high voltage disconnect circuit connector cover. Refer to *High Voltage Disconnect Circuit Connector Cover Replacement on page 9-174*.	
1	High Voltage Cable Connector Fastener **Caution:** Refer to *Fastener Caution on page 0-8*. **Tighten** 9 N•m (80 lb in)
2	High Voltage Connector to Drive Motor Generator Power Inverter Module
3	High Voltage Disconnect Lever
4	High Voltage Connector to High Voltage Battery Disconnect Control Module

High Voltage Battery Disconnect Cable Replacement

Removal Procedure

Danger: Always perform the High Voltage Disabling procedure prior to servicing any High Voltage component or connection. Personal Protection Equipment (PPE) and proper procedures must be followed.

The High Voltage Disabling procedure includes the following steps:

- ***Identify how to disable high voltage.***
- ***Identify how to test for the presence of high voltage.***
- ***Identify condition under which high voltage is always present and personal protection equipment (PPE) and proper procedures must be followed.***

Before working on any high voltage system, be sure to wear the following Personal Protection Equipment:

- ***Safety glasses with appropriate side shields when within 15 meters (50 feet) of the vehicle, either indoors or outdoors.***
- ***Certified and up-to-date Class "0" Insulation gloves rated at 1000V with leather protectors.***
  - ***Visually and functionally inspect the gloves before use.***
  - ***Wear the Insulation gloves with leather protectors at all times when working with the high voltage battery assembly, whether the system is energized or not.***

Failure to follow the procedures may result in serious injury or death.

1. Remove the drive motor battery. Refer to *Drive Motor Battery Replacement and Shipping Preparation on page 9-524*.
2. Remove the drive motor battery cover. Refer to *Drive Motor Battery Cover Replacement on page 9-449*.

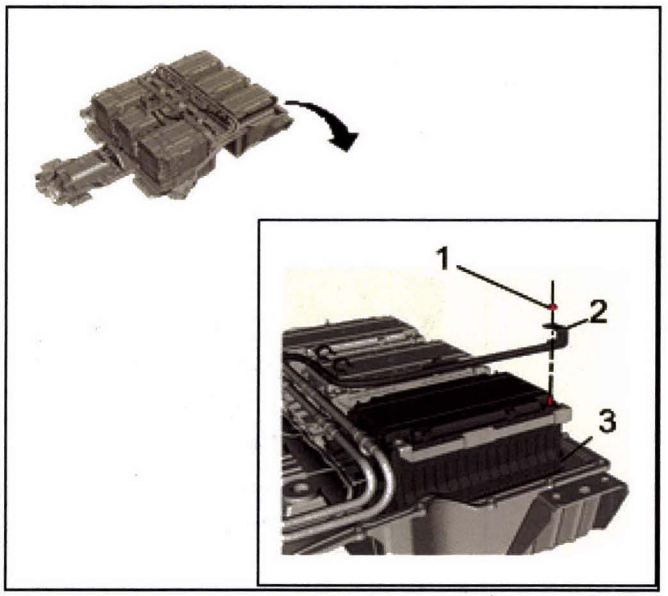

3708758

3. Remove the fastener (1), securing the high voltage battery disconnect cable (2), to the battery cell 4 (3).

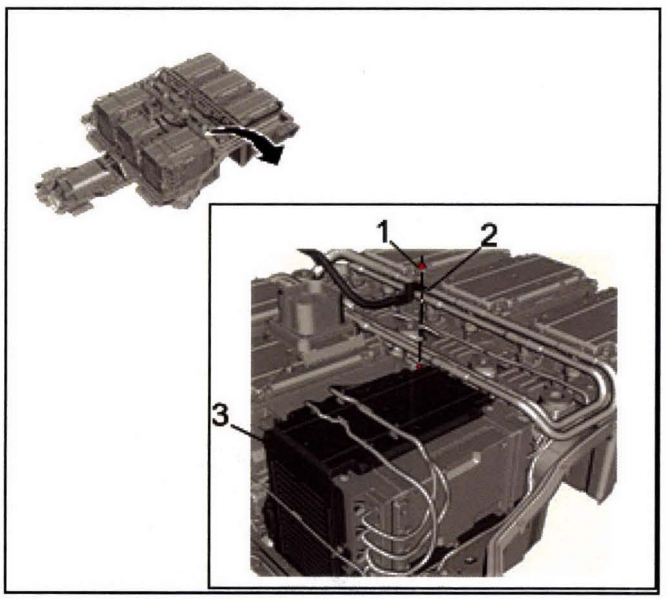

3708760

4. Remove the fastener (1), securing the high voltage battery disconnect cable (2), to the battery cell 3 (3).

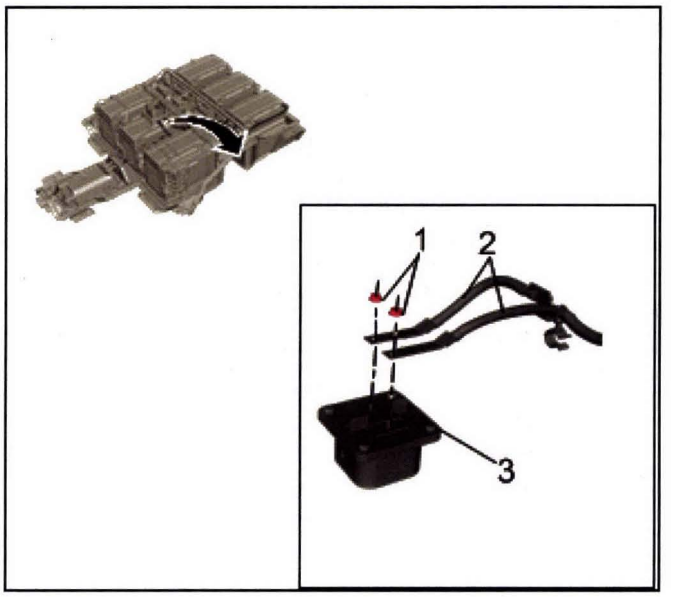

3708761

5. Flip over the high voltage battery disconnect connector (3) and remove the fasteners (1), securing the high voltage battery disconnect cables (2), to the underside of the connector.

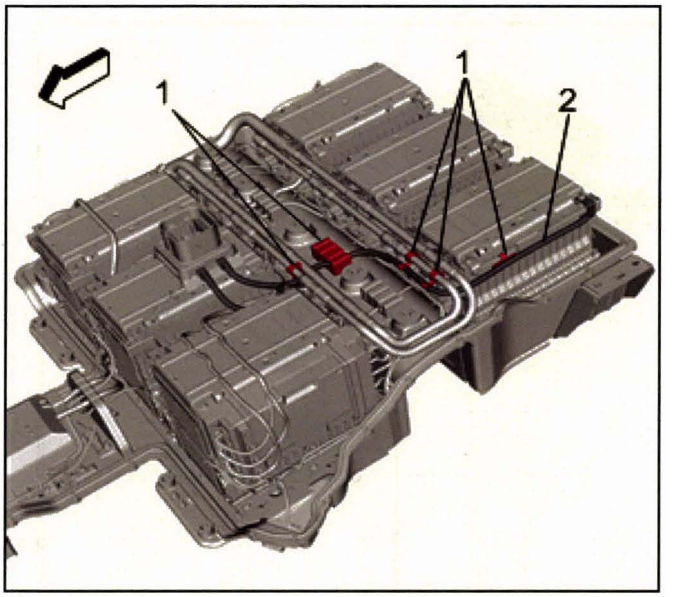

3708762

Note: Observe how the high voltage battery disconnect cable was routed along the battery cell sections.

6. Remove the clips/retainers (1) and remove the high voltage disconnect cable (2) from the drive motor battery.

Installation Procedure

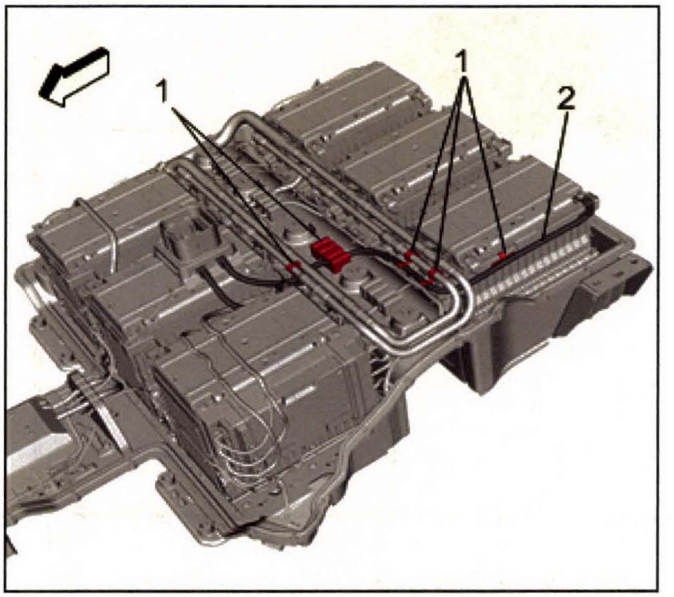

3708762

1. Install the high voltage battery disconnect cable (2) with the retainer/clips (1).

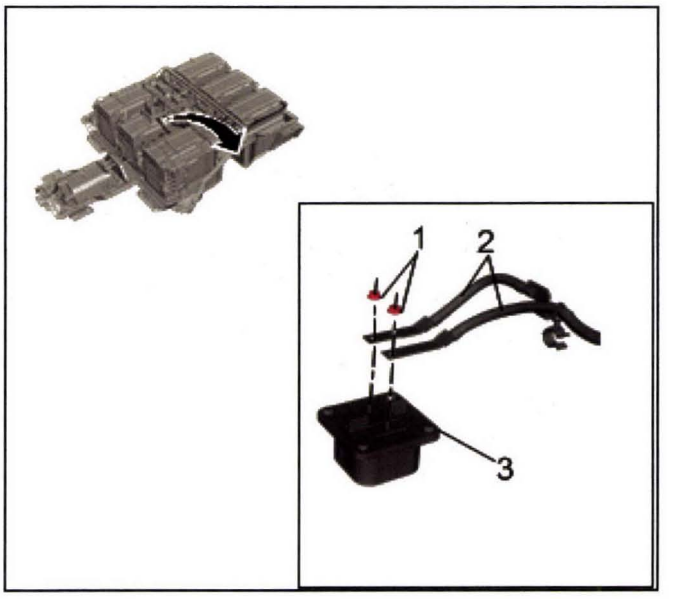

3708761

Caution: Refer to *Fastener Caution on page 0-8*.

Note: Critical high voltage fastener. Perform second torque verification check following re-assembly.

2. Install the high voltage battery disconnect cables (2) to the underside of the battery disconnect connector (3) and tighten the fasteners (1) to **9** N•m **(80 lb in)**.

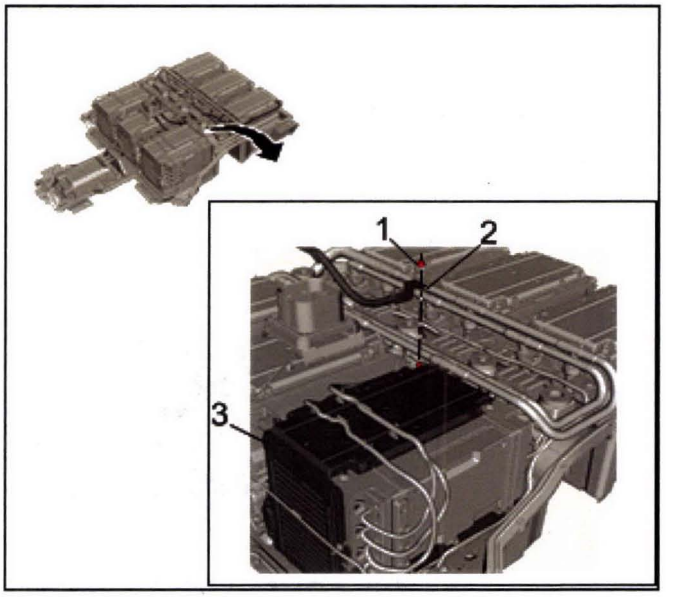

3708760

Note: Critical high voltage fastener. Perform second torque verification check following re-assembly.

3. Install the high voltage battery disconnect cable (2) to the battery cell 3 (3) and tighten the fastener (1) to **9** N•m **(80 lb in)**.

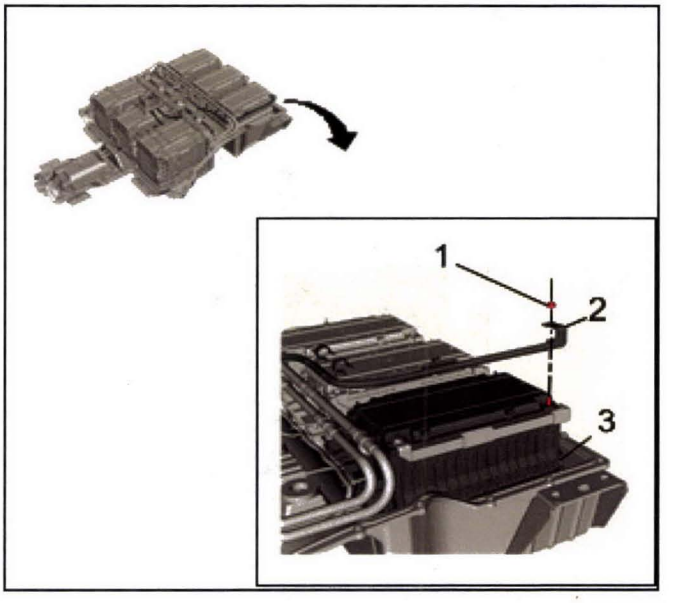

3708758

4. Install the high voltage battery disconnect cable (2) to the battery cell 4 (3) and tighten the fastener (1) to **9** N•m **(80 lb in)**.

Note: Critical high voltage fastener. Perform second torque verification check following re-assembly.

5. Install the drive motor battery cover. Refer to *Drive Motor Battery Cover Replacement on page 9-449*.
6. Install the drive motor battery. Refer to *Drive Motor Battery Replacement and Shipping Preparation on page 9-524*.

Cell Battery High Voltage Sensor Replacement (Temperature Sensors)

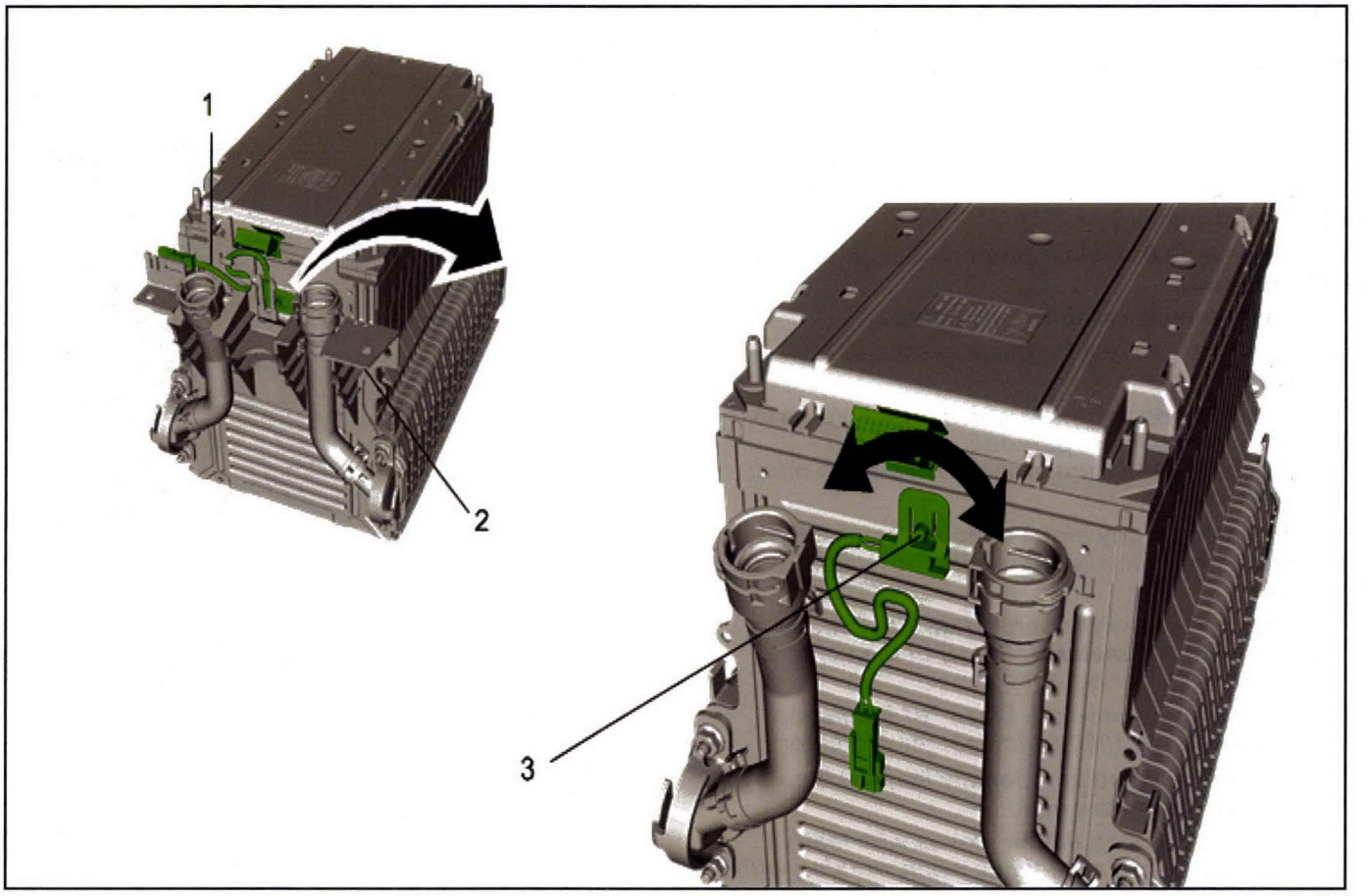

3740934

Cell Battery High Voltage Sensor Replacement (Temperature Sensors)

Callout	Component Name
Danger: Ensure all High Voltage safety procedures are followed. Failure to follow the procedure exactly as written may result in serious injury or death. ***Danger: Before working on any high voltage system, be sure to wear the following Personal Protection Equipment:*** • ***Safety glasses with appropriate side shields when within 50 feet of the vehicle, either indoors or outdoors*** • ***Certified and up-to-date Class "0" Insulation gloves rated at 1000V with leather protectors*** – ***Visually and functionally inspect the gloves before use.*** – ***Wear the Insulation gloves at all times when working with the high voltage battery assembly, whether the system is energized or not.*** ***Failure to follow the procedure exactly as written may result in serious injury or death.*** **Preliminary Procedure** 1. Remove the drive motor battery. Refer to *Drive Motor Battery Replacement and Shipping Preparation on page 9-524*. 2. Remove the drive motor battery cover. Refer to *Drive Motor Battery Cover Replacement on page 9-449*. 3. Remove the battery cell. Refer to *Cell Battery Replacement (Battery Cell 1) on page 9-462* or *Cell Battery Replacement (Battery Cell 2) on page 9-467* or *Cell Battery Replacement (Battery Cell 3) on page 9-473* or *Cell Battery Replacement (Battery Cell 4) on page 9-479* or *Cell Battery Replacement (Battery Cell 5) on page 9-485* or *Cell Battery Replacement (Battery Cell 6) on page 9-490*.	
1	Cell Battery High Voltage Sensor Pigtail Harness
2	Drive Motor Battery Coolant Cooler Bracket
3	Cell Battery High Voltage Sensor **Procedure** 1. Unclip the pigtail harness (1) from the harness retaining clips on the drive motor battery coolant cooler bracket (2). 2. Rotate the sensor counter-clockwise. 3. Remove the cell battery high voltage sensor (3) from the battery cell.

Cell Battery Replacement (Battery Cell 1)

Removal Procedure

Danger: Always perform the High Voltage Disabling procedure prior to servicing any High Voltage component or connection. Personal Protection Equipment (PPE) and proper procedures must be followed.

The High Voltage Disabling procedure includes the following steps:

- ***Identify how to disable high voltage.***
- ***Identify how to test for the presence of high voltage.***
- ***Identify condition under which high voltage is always present and personal protection equipment (PPE) and proper procedures must be followed.***

Before working on any high voltage system, be sure to wear the following Personal Protection Equipment:

- ***Safety glasses with appropriate side shields when within 15 meters (50 feet) of the vehicle, either indoors or outdoors.***
- ***Certified and up-to-date Class "0" Insulation gloves rated at 1000V with leather protectors.***
  - ***Visually and functionally inspect the gloves before use.***
  - ***Wear the Insulation gloves with leather protectors at all times when working with the high voltage battery assembly, whether the system is energized or not.***

Failure to follow the procedures may result in serious injury or death.

1. Remove the drive motor battery. Refer to *Drive Motor Battery Replacement and Shipping Preparation on page 9-524*.
2. Remove the drive motor battery cover. Refer to *Drive Motor Battery Cover Replacement on page 9-449*.
3. Remove the cell battery cooling manifold outlet hose. Refer to *High Voltage Battery Cooling Manifold Outlet Hose Replacement (Coolant to all Battery Cells) on page 9-339* or *High Voltage Battery Cooling Manifold Outlet Hose Replacement (Individual Battery Cell Coolant Outlet Hose) on page 9-342*.
4. Remove the cell battery cooling manifold inlet hose. Refer to *High Voltage Battery Cooling Manifold Inlet Hose Replacement (Coolant to all Battery Cells) on page 9-336* or *High Voltage Battery Cooling Manifold Inlet Hose Replacement (Individual Battery Cell Coolant Inlet Hose) on page 9-338*.

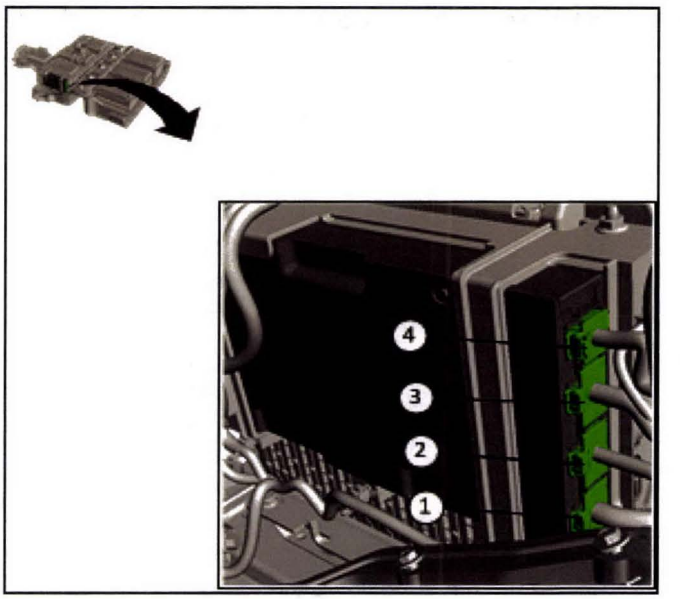

4072888

Note: Damage to the battery energy control module may occur if connector removal sequence to the module is not followed. Battery energy control module connector installation sequence is reverse of the removal sequence and must be performed after all sections have been reconnected.

5. Disconnect the battery energy control module connectors in the sequence shown.

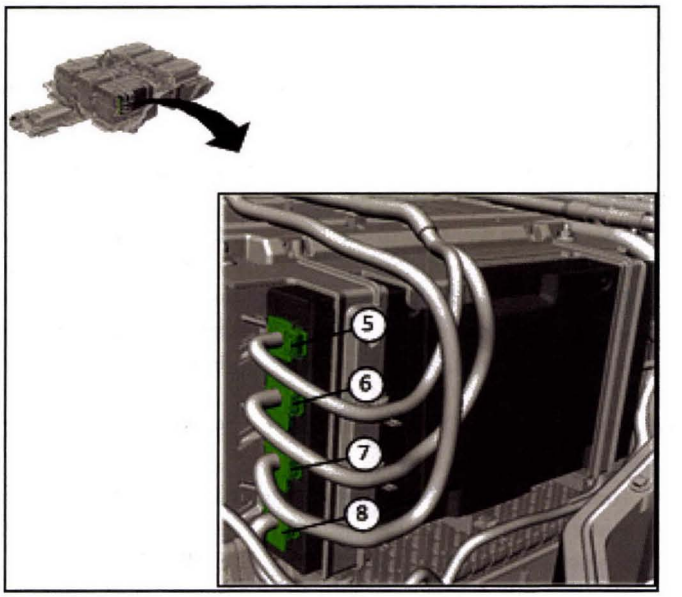

4072891

Note: Damage to the battery energy control module may occur if connector sequence to the module is not followed.

6. Disconnect the battery energy control module connectors in the sequence shown.

7. Remove the drive motor battery negative cable from module 1. Refer to *Drive Motor Battery Positive and Negative Cable Replacement (Battery Cell 1 to Drive Motor Battery High Voltage Contactor Relay) on page 9-504* or *Drive Motor Battery Positive and Negative Cable Replacement (Battery Cell 6 to Drive Motor Battery Positive High Voltage Contactor Relay) on page 9-507*.

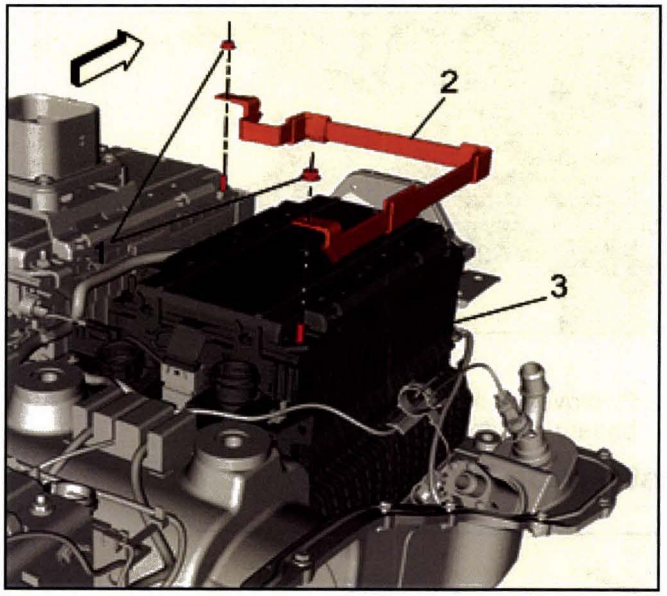

3715434

Note: Cover the battery cell studs with protective tape.

8. Remove the fasteners (1) and remove the high voltage cable (2) from battery cell 1 (3) and battery cell 2.

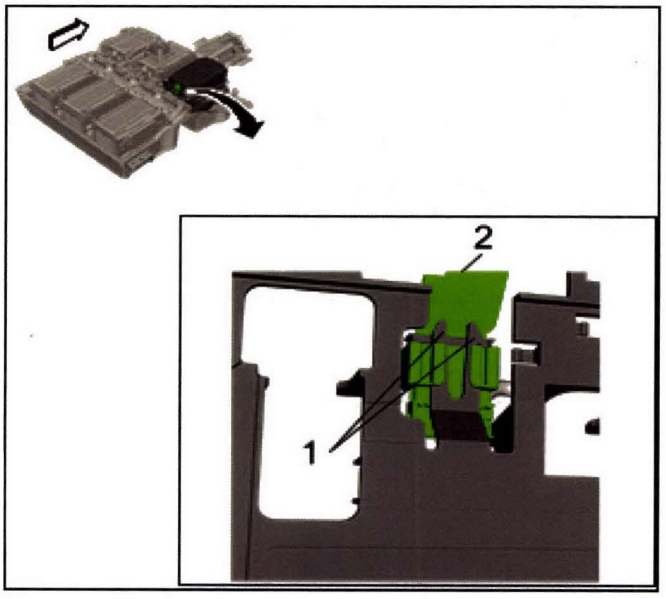

3715436

9. Depress the retaining tabs (1) and reposition the connector being careful not to tear the thin film harness (2).

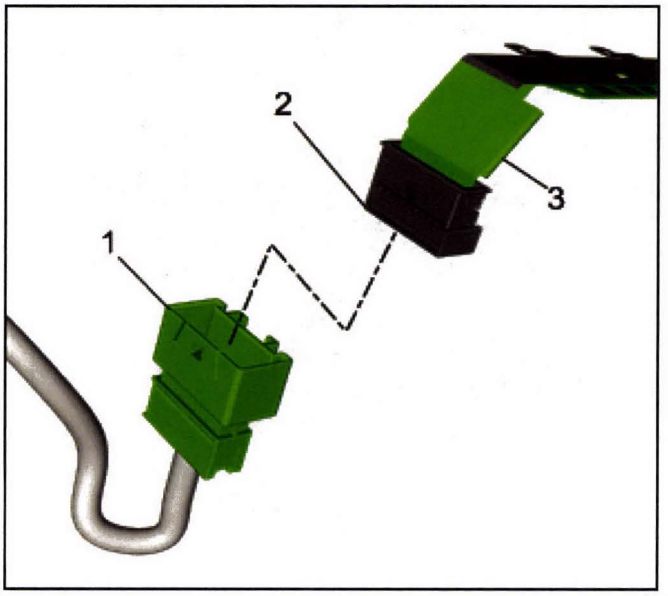

3715437

10. Disconnect the auxiliary battery wiring harness connector (1) from the battery cell 1 connector (2) being careful not to tear the thin film harness (3).

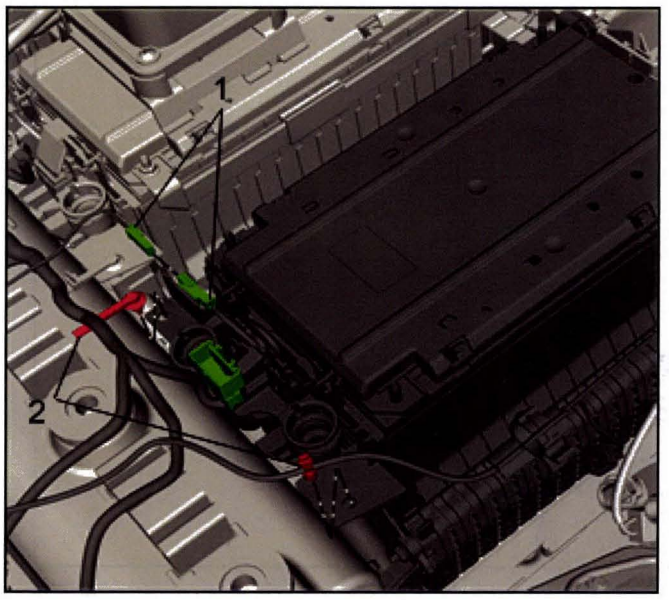

3715439

11. Disconnect the thermistor sensor connector (1) and detach the auxiliary battery wiring harness retainers (2) from the battery cell 1 bracket.

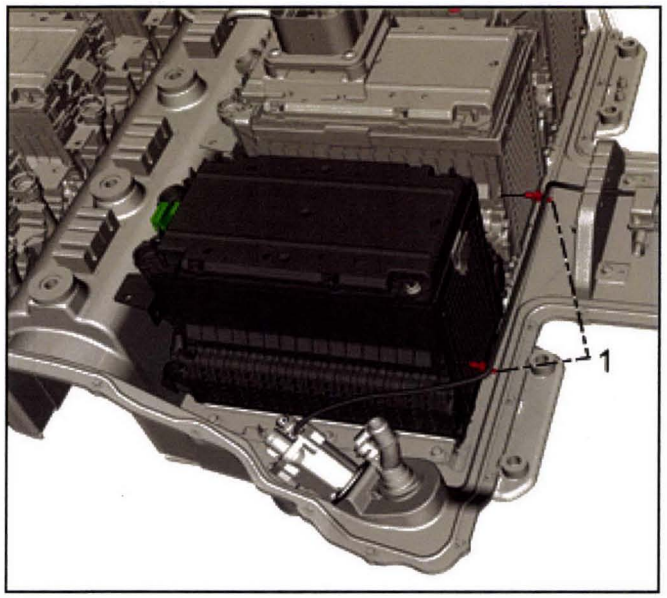

3715442

12. Disconnect the heater assembly harness retainers (1) to battery cell 1.

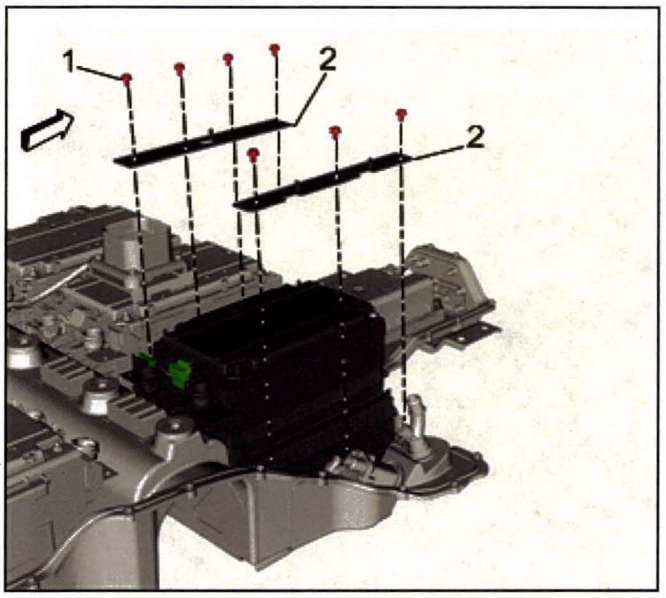

3715446

Note: Marked side of brackets face upwards when installing.

13. Remove the fasteners (1) and remove the battery hold down brackets (2).

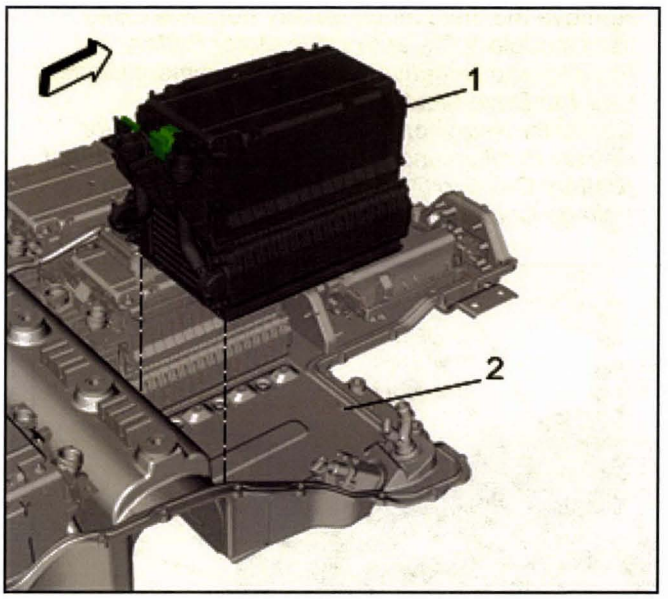

3715447

14. Remove the battery cell (1) from the drive motor battery assembly.

Installation Procedure

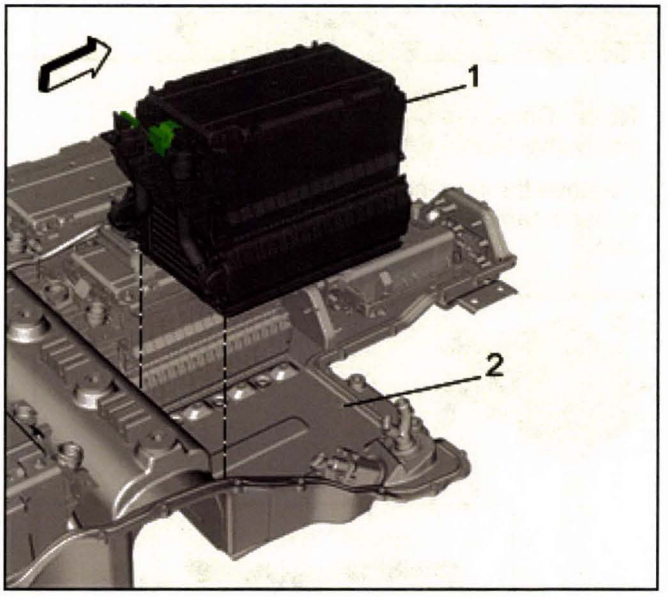

3715447

1. Install the cell battery (1) into the drive motor battery assembly with the front edge of the battery cell pushed up against the backstop tab (2).

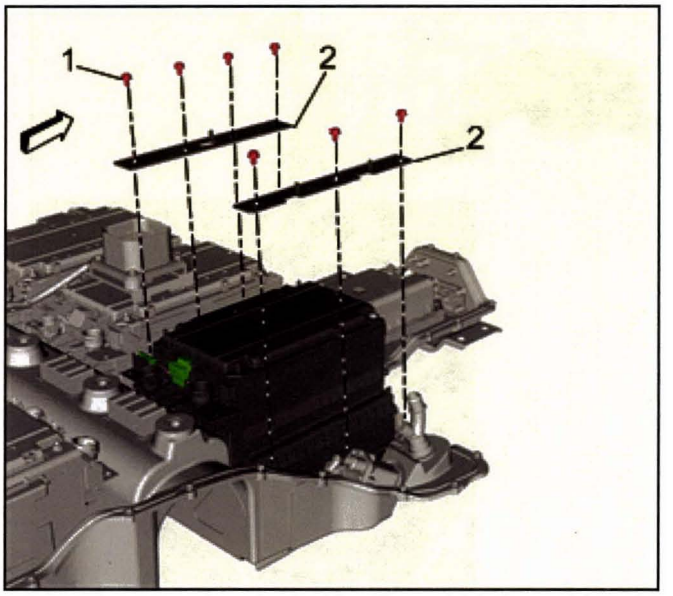

3715446

Caution: Refer to *Fastener Caution on page 0-8*.

2. Install the battery cell hold down brackets (2) with the marked up side facing up. Tighten the fasteners (1) to **9 N•m (80 lb in)**.

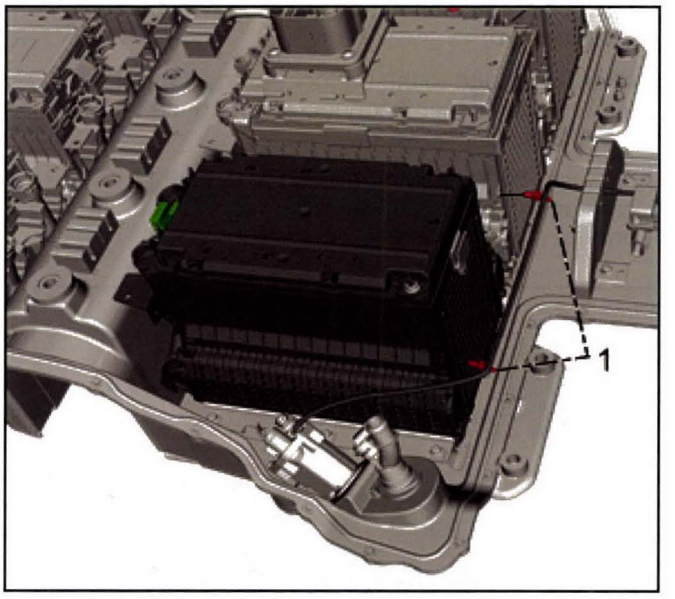

3715442

3. Connect the heater assembly harness retainers (1) to the battery cell.

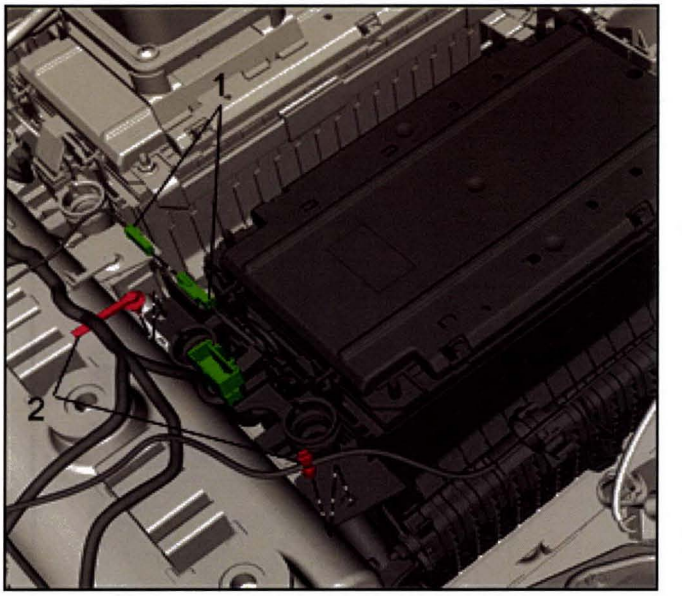

3715439

4. Connect the battery cell thermistor sensor connector (1) and install the auxiliary battery wiring harness retainers (2) to the battery cell bracket.

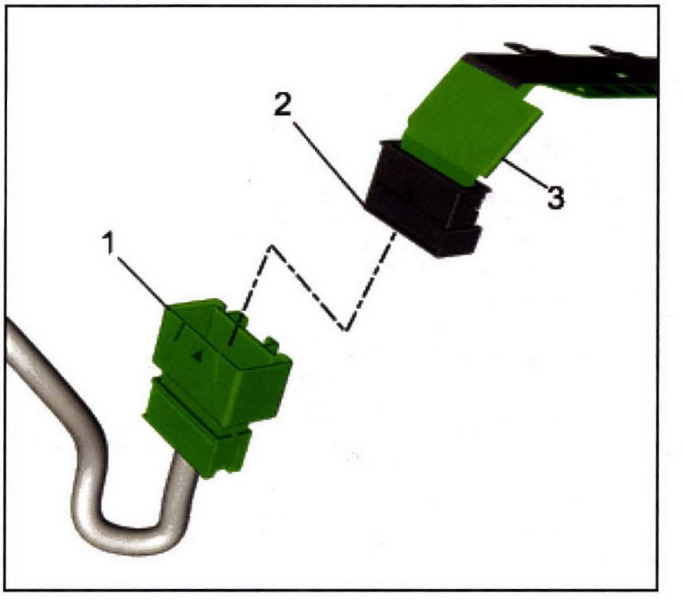

3715437

5. Connect the battery cell connector (2) to the auxiliary battery wiring harness connector (1) taking care not to tear the film harness (3).

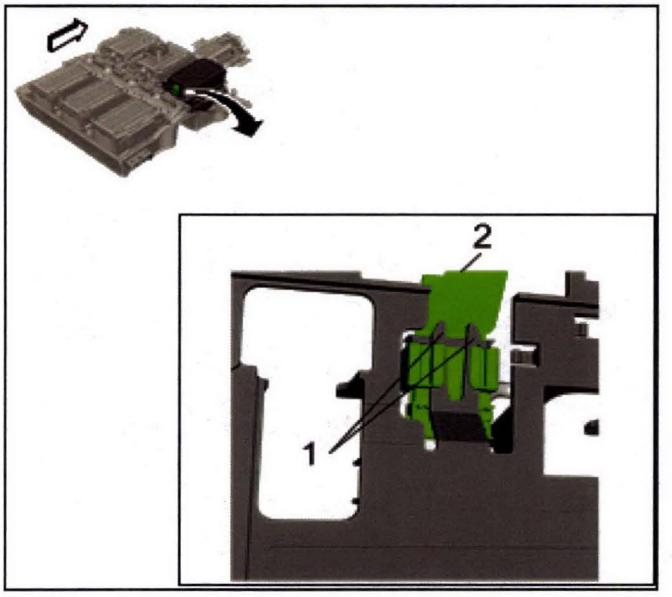

3715436

6. Install the battery cell connector onto the bracket retaining tabs (1).

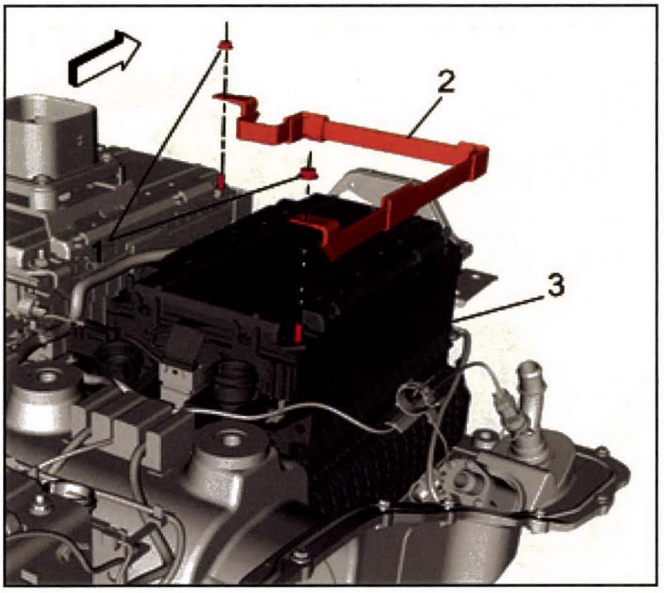

3715434

Note: Critical high voltage fastener. Perform second torque verification check following re-assembly.

7. Install the high voltage battery positive cable (2) onto the battery cell 1 and battery cell 2 studs. Tighten the fasteners (1) to **9** N•m **(80 lb in)**.
8. Install the drive motor battery negative cable. Refer to *Drive Motor Battery Positive and Negative Cable Replacement (Battery Cell 1 to Drive Motor Battery High Voltage Contactor Relay) on page 9-504* or *Drive Motor Battery Positive and Negative Cable Replacement (Battery Cell 6 to Drive Motor Battery Positive High Voltage Contactor Relay) on page 9-507*.

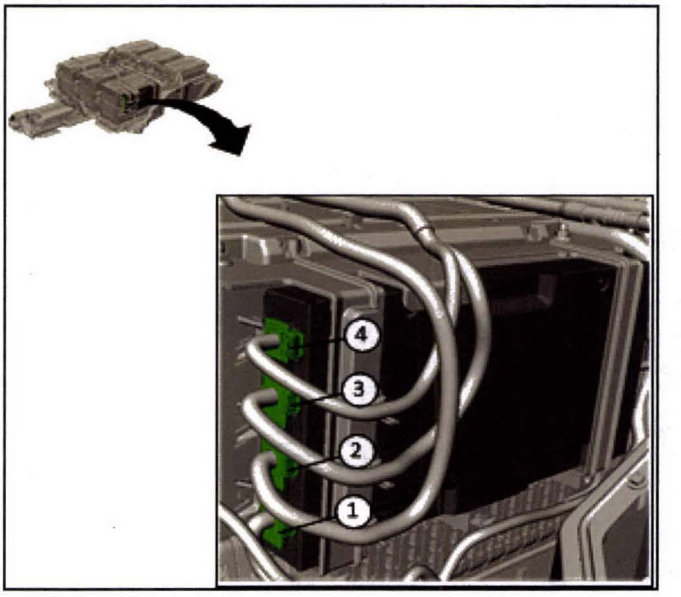

4072893

Note: Damage to the battery energy control module may occur if connector installation sequence to the module is not followed. Battery energy control module connector installation sequence is reverse of the removal sequence and must be performed after all sections have been reconnected.

Note: Damage to the battery energy control module may occur if connector sequence to the module is not followed.

9. Connect the battery energy control module connectors in the sequence shown to the battery energy control module.

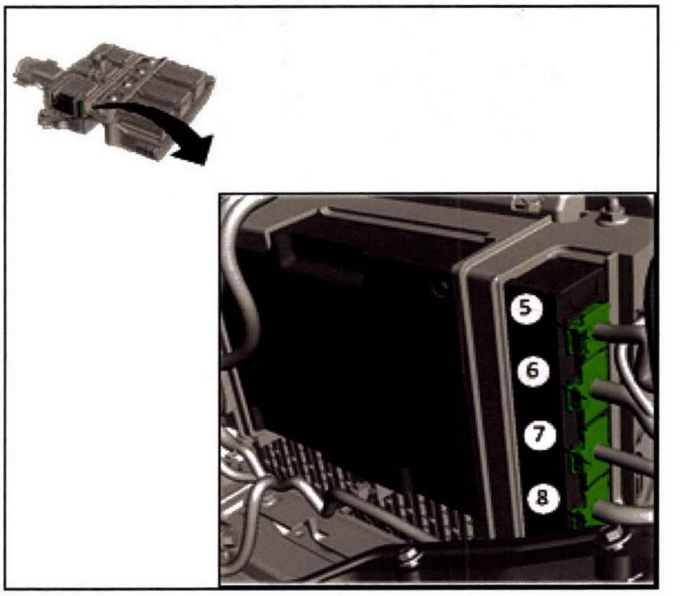

4072895

Note: Damage to the battery energy control module may occur if connector sequence to the module is not followed.

10. Connect the battery energy control module connectors in the sequence shown to the battery energy control module.

11. Install the cell battery cooling manifold inlet hose. Refer to *High Voltage Battery Cooling Manifold Inlet Hose Replacement (Coolant to all Battery Cells) on page 9-336* or *High Voltage Battery Cooling Manifold Inlet Hose Replacement (Individual Battery Cell Coolant Inlet Hose) on page 9-338*.
12. Install the cell battery cooling manifold outlet hose. Refer to *High Voltage Battery Cooling Manifold Outlet Hose Replacement (Coolant to all Battery Cells) on page 9-339* or *High Voltage Battery Cooling Manifold Outlet Hose Replacement (Individual Battery Cell Coolant Outlet Hose) on page 9-342*.
13. Perform the hybrid battery pack coolant passage leak test. Refer to *Hybrid Battery Pack Coolant Passage Leak Test on page 9-257*.
14. Perform the cell battery balancing if replaced. refer to *Hybrid/EV Battery Cell Balancing on page 9-541*.
15. Install the drive motor battery cover. Refer to *Drive Motor Battery Cover Replacement on page 9-449*.
16. Install the drive motor battery. Refer to *Drive Motor Battery Replacement and Shipping Preparation on page 9-524*.

Cell Battery Replacement (Battery Cell 2)

Removal Procedure

Danger: Always perform the High Voltage Disabling procedure prior to servicing any High Voltage component or connection. Personal Protection Equipment (PPE) and proper procedures must be followed.

The High Voltage Disabling procedure includes the following steps:

- ***Identify how to disable high voltage.***
- ***Identify how to test for the presence of high voltage.***
- ***Identify condition under which high voltage is always present and personal protection equipment (PPE) and proper procedures must be followed.***

Before working on any high voltage system, be sure to wear the following Personal Protection Equipment:

- ***Safety glasses with appropriate side shields when within 15 meters (50 feet) of the vehicle, either indoors or outdoors.***
- ***Certified and up-to-date Class "0" Insulation gloves rated at 1000V with leather protectors.***
  - ***Visually and functionally inspect the gloves before use.***
  - ***Wear the Insulation gloves with leather protectors at all times when working with the high voltage battery assembly, whether the system is energized or not.***

Failure to follow the procedures may result in serious injury or death.

1. Remove the drive motor battery. Refer to *Drive Motor Battery Replacement and Shipping Preparation on page 9-524*.
2. Remove the drive motor battery cover. Refer to *Drive Motor Battery Cover Replacement on page 9-449*.
3. Remove the cell battery cooling manifold outlet hose. Refer to *High Voltage Battery Cooling Manifold Outlet Hose Replacement (Coolant to all Battery Cells) on page 9-339* or *High Voltage Battery Cooling Manifold Outlet Hose Replacement (Individual Battery Cell Coolant Outlet Hose) on page 9-342*.
4. Remove the cell battery cooling manifold inlet hose. Refer to *High Voltage Battery Cooling Manifold Inlet Hose Replacement (Coolant to all Battery Cells) on page 9-336* or *High Voltage Battery Cooling Manifold Inlet Hose Replacement (Individual Battery Cell Coolant Inlet Hose) on page 9-338*.

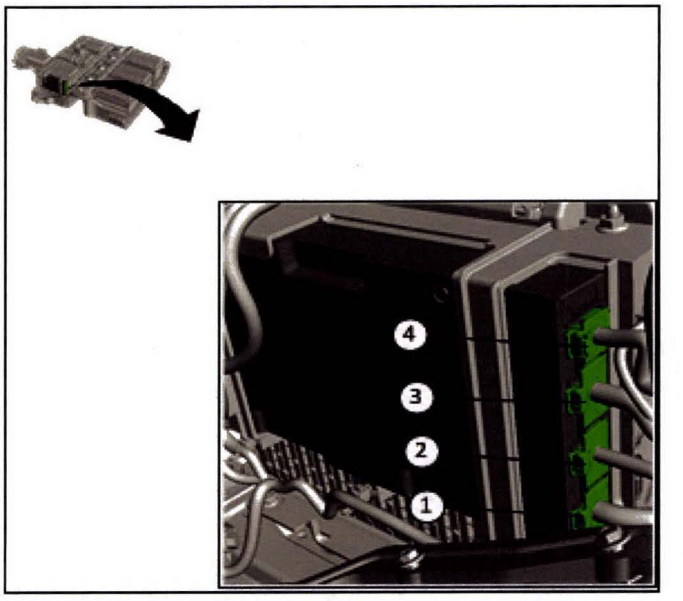

4072888

Note: Damage to the battery energy control module may occur if connector removal sequence to the module is not followed. Battery energy control module connector installation sequence is reverse of the removal sequence and must be performed after all sections have been reconnected.

5. Disconnect the battery energy control module connectors in the sequence shown.

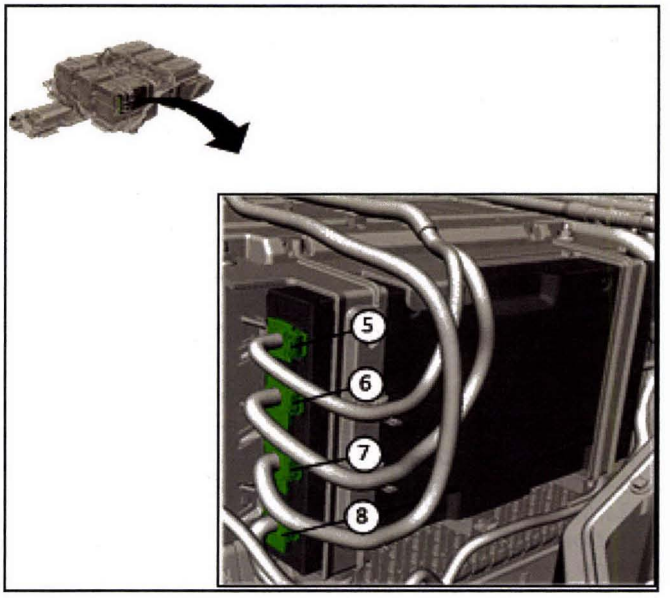

4072891

Note: Damage to the battery energy control module may occur if connector sequence to the module is not followed.

6. Disconnect the battery energy control module connectors in the sequence shown.
7. Reposition the drive motor generator battery high voltage manual disconnect connector assembly sitting on top of battery cell 2.

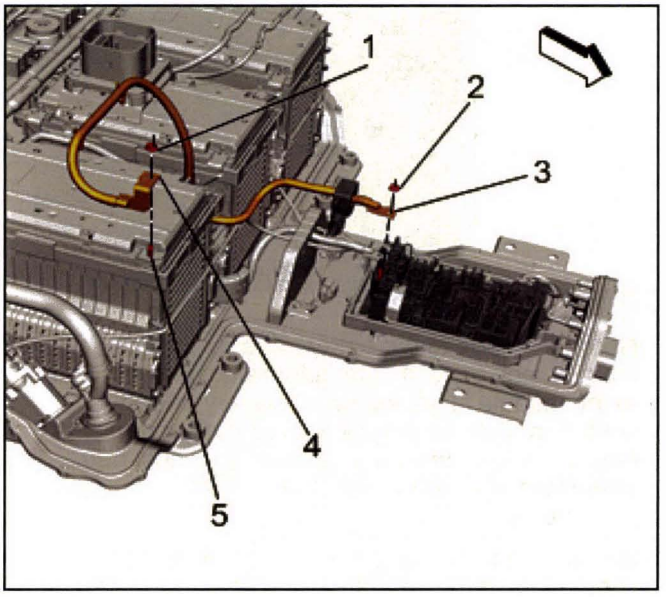

3707869

Note: Cover the battery cell stud (5) with protective tape that is UL® listed or insulation tape rated at a minimum of 600V.

8. Remove the fastener (1) and remove the drive motor battery negative cable terminal (4), from the battery cell stud (5).

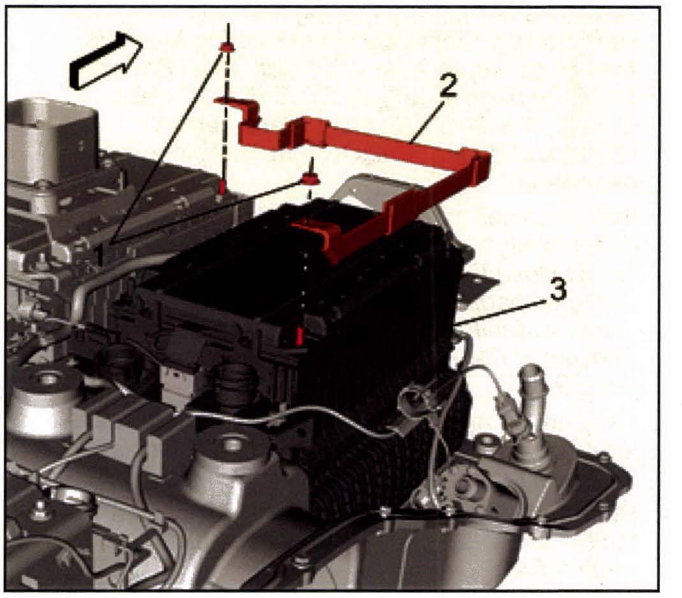

3715434

Note: Cover the battery cell studs with protective tape that is UL® listed or insulation tape rated at a minimum of 600V.

9. Remove the fasteners (1) and remove the high voltage cable (2) from battery cell 1 (3) and battery cell 2.
10. Unclip high voltage harness retainers from the bus bar.

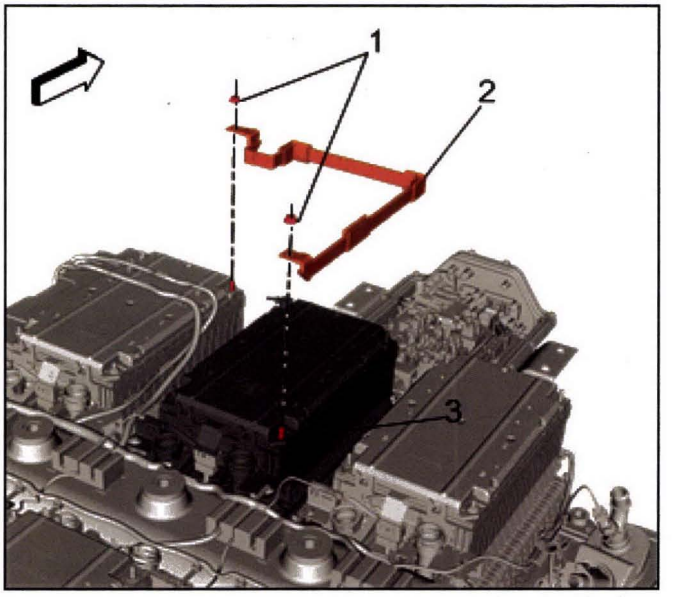

3716442

11. Detach any harness clips to the high voltage cable (2).
12. Remove the fasteners (1) and remove the high voltage cable (2) from battery cell 2 (3) and battery cell 3.

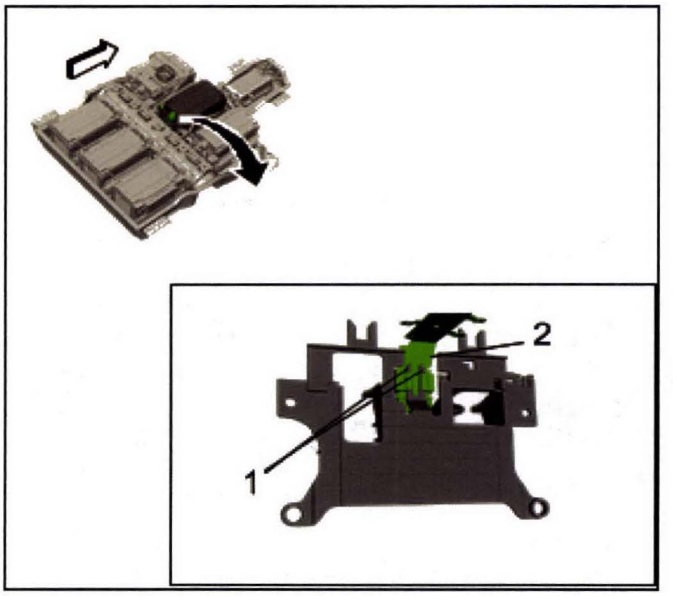

3716386

13. Depress the retaining tabs (1) and reposition the connector being careful not to tear the thin film harness (2).

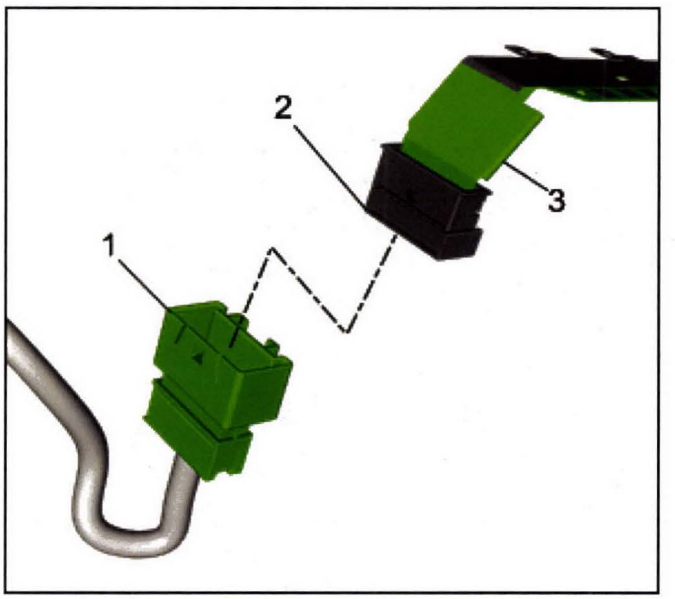

3715437

14. Disconnect the auxiliary battery wiring harness connector (1) from the battery cell 2 connector (2) being careful not to tear the thin film harness (3).

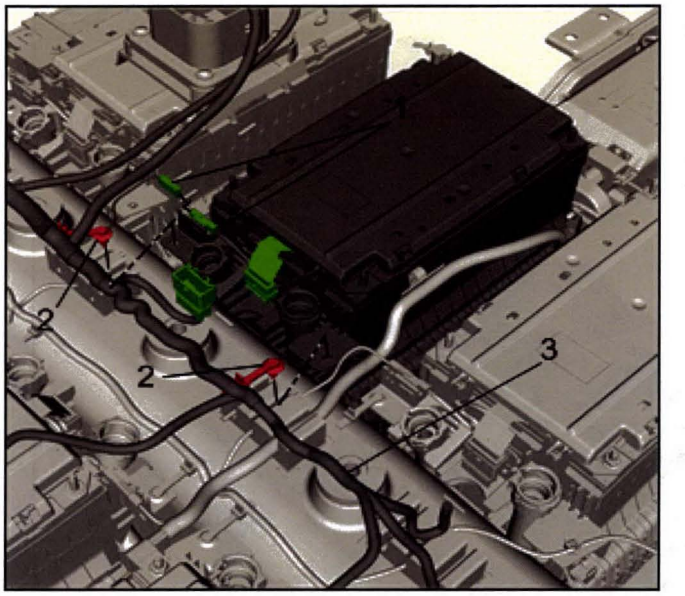

3716388

15. Disconnect the thermistor sensor connector (1) and detach the auxiliary battery wiring harness retainers (2) from the battery cell 2 bracket.

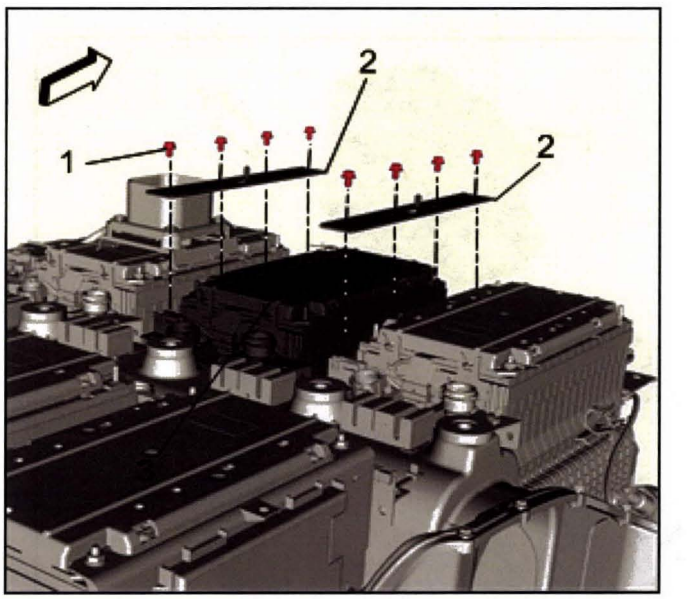

3716391

Note: Marked side of brackets face upwards when installing.

16. Remove the fasteners (1) and remove the battery hold down brackets (2) securing the battery cell 2 (3) to the tray.

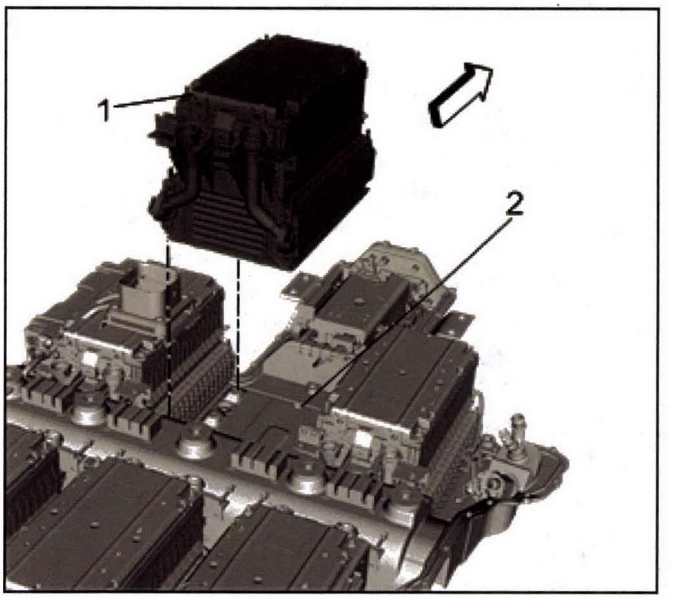

3716392

17. Remove the battery cell (1) from the drive motor battery assembly.

Installation Procedure

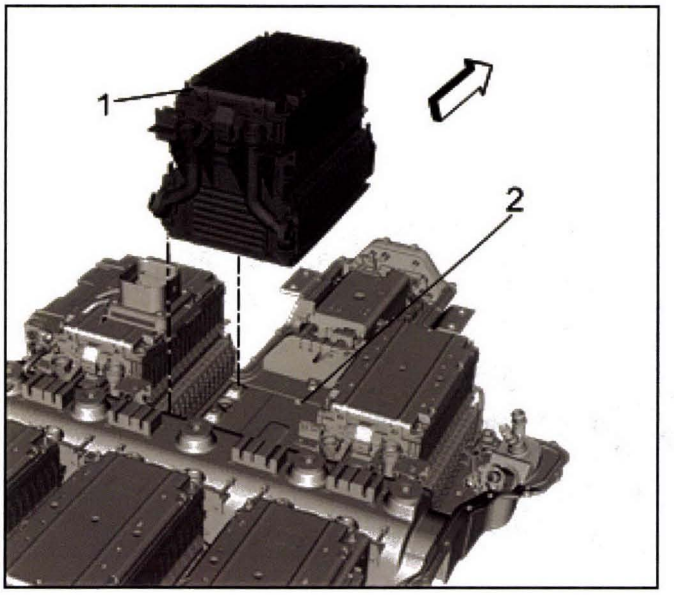

3716392

1. Install the cell battery (1) into the drive motor battery assembly with the front edge of the battery cell pushed up against the backstop tab (2).

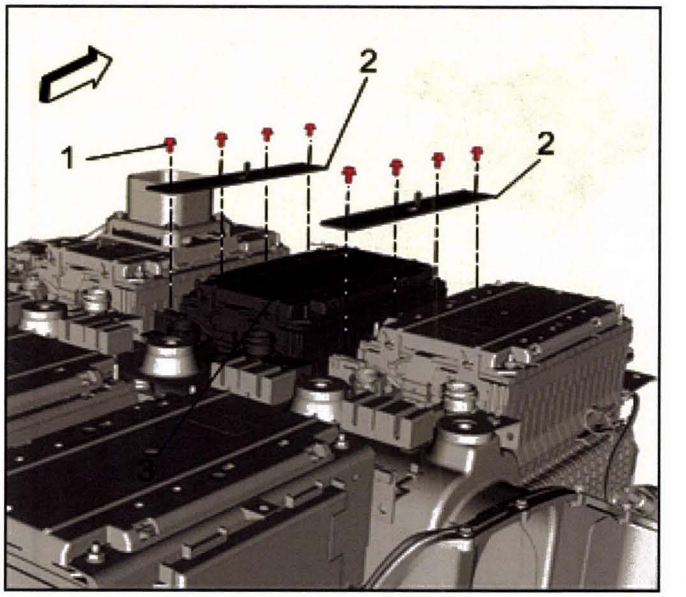

3716391

Caution: Refer to *Fastener Caution on page 0-8*.

2. Install the battery cell hold down brackets (2) with the marked up side facing up. Tighten the fasteners (1) to **9** N•m **(80 lb in)**.

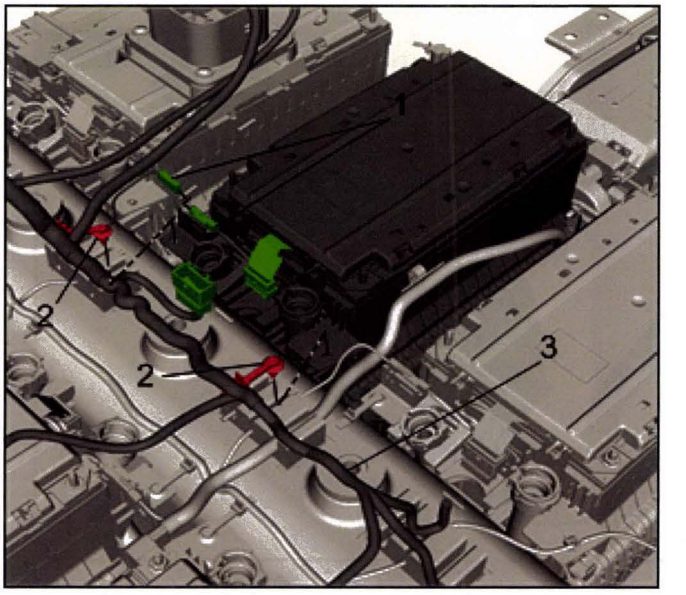

3716388

3. Connect the battery cell thermistor sensor connector (1) and install the auxiliary battery wiring harness retainers (2) to the battery cell bracket.
4. Attach the high voltage harness into bus bar clips.

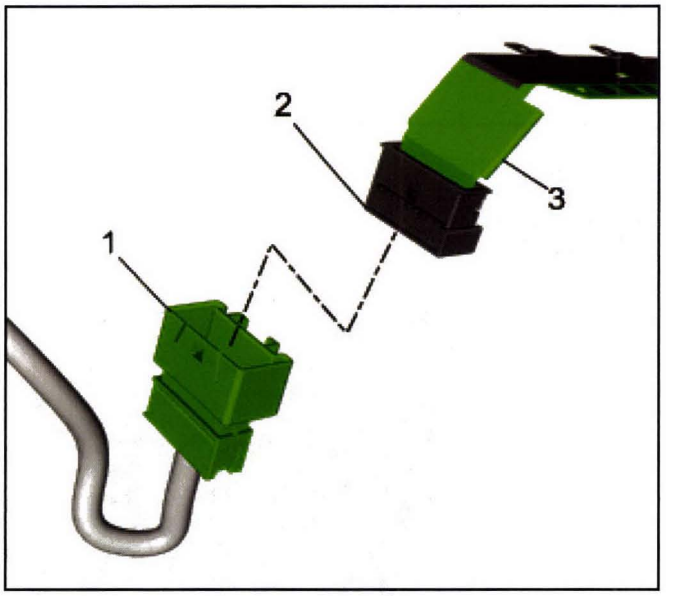

3715437

5. Connect the battery cell connector (2) to the auxiliary battery wiring harness connector (1) taking care not to tear the film harness (3).

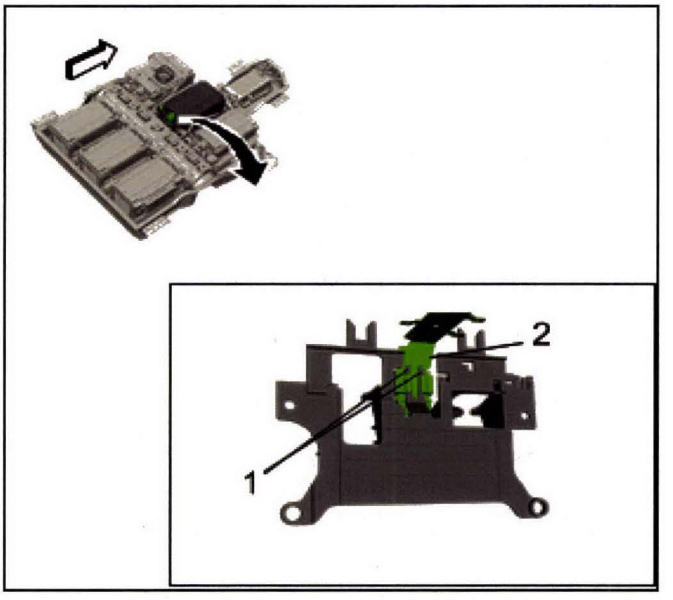

3716386

6. Install the battery cell connector onto the bracket retaining tabs (1).

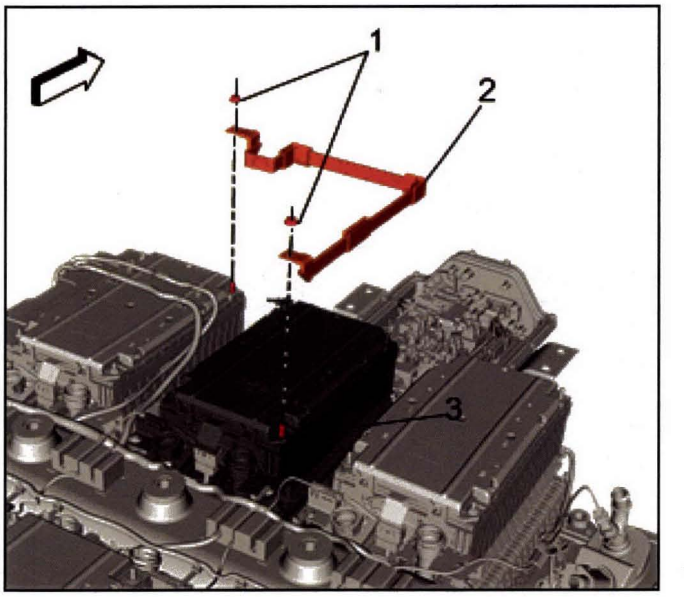

3716442

Note: Critical high voltage fastener. Perform second torque verification check following re-assembly.

7. Install the high voltage cable (2) to battery cell 2 (3) and battery cell 3. Tighten the fasteners (1) to **9** N•m **(80 lb in)**.
8. Clip high voltage cable into bus bar clips.

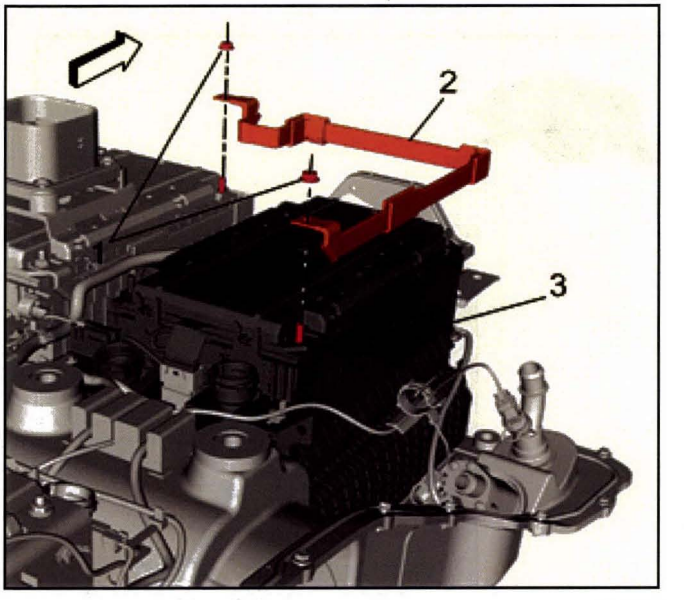

3715434

Note: Critical high voltage fastener. Perform second torque verification check following re-assembly.

9. Install the high voltage battery cable (2) onto battery cell 1 (3) and battery cell 2. Tighten the fasteners (1) to **9** N•m **(80 lb in)**.

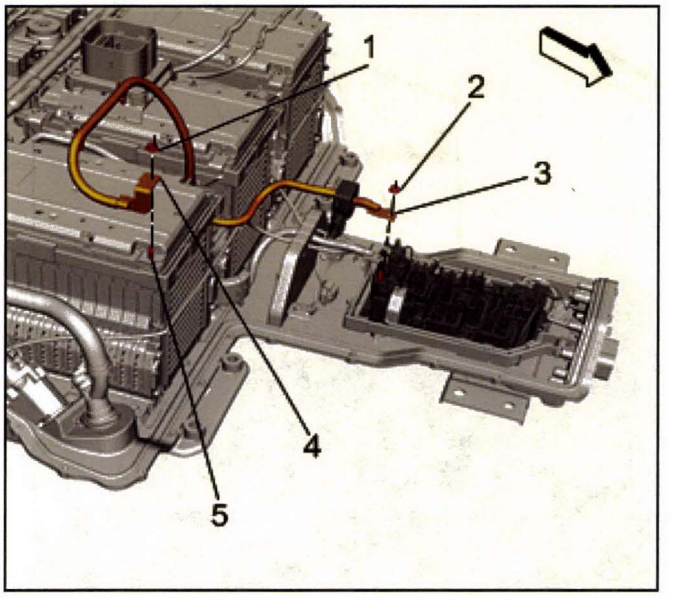

3707869

Note: Critical high voltage fastener. Perform second torque verification check following re-assembly.

10. Install the drive motor battery negative cable terminal (4) to the battery cell 1 (5). Tighten the fastener (1) to **9** N•m **(80 lb in)**.
11. Install the BDU cover and secure the current sensor to the BDU cover.

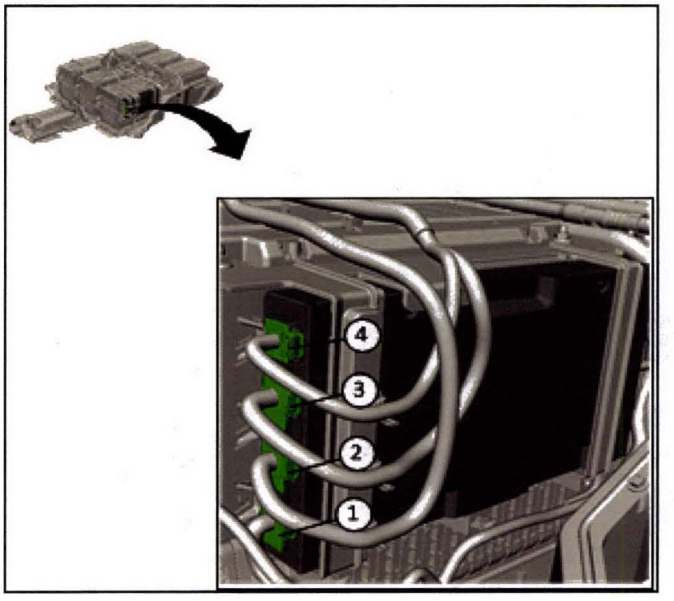

4072893

Note: Damage to the battery energy control module may occur if connector installation sequence to the module is not followed. Battery energy control module connector installation sequence is reverse of the removal sequence and must be performed after all sections have been reconnected.

Note: Damage to the battery energy control module may occur if connector sequence to the module is not followed.

12. Connect the battery energy control module connectors in the sequence shown to the battery energy control module.

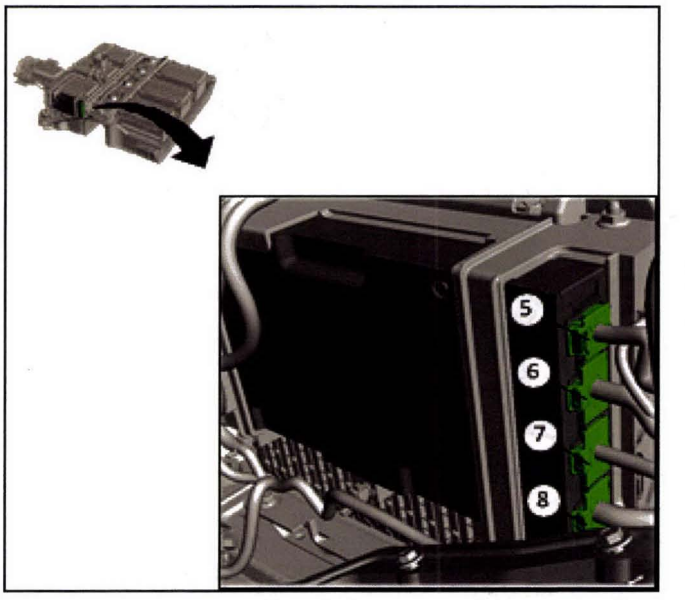

4072895

Note: Damage to the battery energy control module may occur if connector sequence to the module is not followed.

13. Connect the battery energy control module connectors in the sequence shown to the battery energy control module.
14. Install the cell battery cooling manifold inlet hose. Refer to *High Voltage Battery Cooling Manifold Inlet Hose Replacement (Coolant to all Battery Cells) on page 9-336* or *High Voltage Battery Cooling Manifold Inlet Hose Replacement (Individual Battery Cell Coolant Inlet Hose) on page 9-338*.
15. Install the cell battery cooling manifold outlet hose. Refer to *High Voltage Battery Cooling Manifold Outlet Hose Replacement (Coolant to all Battery Cells) on page 9-339* or *High Voltage Battery Cooling Manifold Outlet Hose Replacement (Individual Battery Cell Coolant Outlet Hose) on page 9-342*.
16. Perform the hybrid battery pack coolant passage leak test. Refer to *Hybrid Battery Pack Coolant Passage Leak Test on page 9-257*.
17. Perform the cell battery balancing if replaced. refer to *Hybrid/EV Battery Cell Balancing on page 9-541*.
18. Install the drive motor battery cover. Refer to *Drive Motor Battery Cover Replacement on page 9-449*.
19. Install the drive motor battery. Refer to *Drive Motor Battery Replacement and Shipping Preparation on page 9-524*.

Cell Battery Replacement (Battery Cell 3)

Removal Procedure

Danger: Always perform the High Voltage Disabling procedure prior to servicing any High Voltage component or connection. Personal Protection Equipment (PPE) and proper procedures must be followed.

The High Voltage Disabling procedure includes the following steps:

- ***Identify how to disable high voltage.***
- ***Identify how to test for the presence of high voltage.***
- ***Identify condition under which high voltage is always present and personal protection equipment (PPE) and proper procedures must be followed.***

Before working on any high voltage system, be sure to wear the following Personal Protection Equipment:

- ***Safety glasses with appropriate side shields when within 15 meters (50 feet) of the vehicle, either indoors or outdoors.***
- ***Certified and up-to-date Class "0" Insulation gloves rated at 1000V with leather protectors.***
  - ***Visually and functionally inspect the gloves before use.***
  - ***Wear the Insulation gloves with leather protectors at all times when working with the high voltage battery assembly, whether the system is energized or not.***

Failure to follow the procedures may result in serious injury or death.

1. Remove the drive motor battery. Refer to *Drive Motor Battery Replacement and Shipping Preparation on page 9-524*.
2. Remove the drive motor battery cover. Refer to *Drive Motor Battery Cover Replacement on page 9-449*.
3. Remove the cell battery cooling manifold outlet hose. Refer to *High Voltage Battery Cooling Manifold Outlet Hose Replacement (Coolant to all Battery Cells) on page 9-339* or *High Voltage Battery Cooling Manifold Outlet Hose Replacement (Individual Battery Cell Coolant Outlet Hose) on page 9-342*.
4. Remove the cell battery cooling manifold inlet hose. Refer to *High Voltage Battery Cooling Manifold Inlet Hose Replacement (Coolant to all Battery Cells) on page 9-336* or *High Voltage Battery Cooling Manifold Inlet Hose Replacement (Individual Battery Cell Coolant Inlet Hose) on page 9-338*.

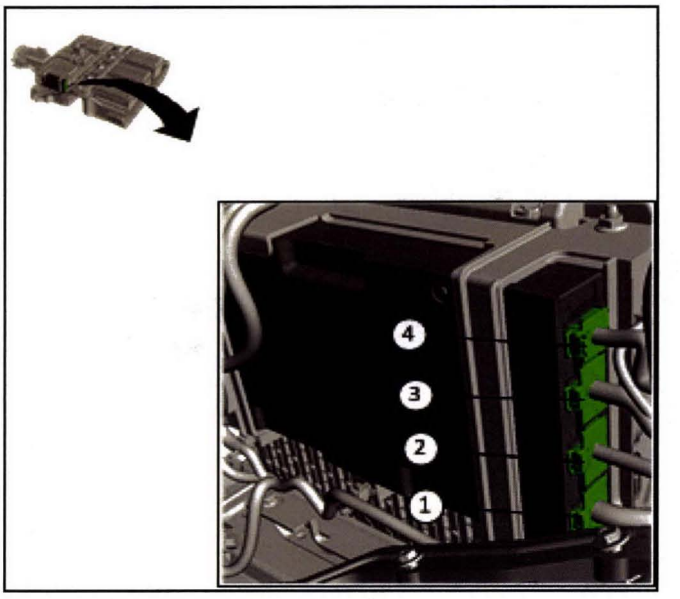

4072888

Note: Damage to the battery energy control module may occur if connector removal sequence to the module is not followed. Battery energy control module connector installation sequence is reverse of the removal sequence and must be performed after all sections have been reconnected.

5. Disconnect the battery energy control module connectors in the sequence shown.

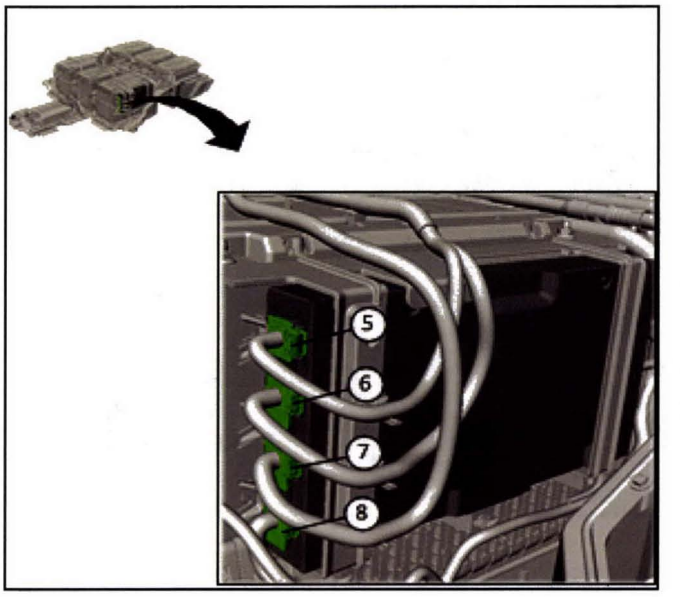

4072891

Note: Damage to the battery energy control module may occur if connector sequence to the module is not followed.

6. Disconnect the battery energy control module connectors in the sequence shown.
7. Remove the battery energy control module. Refer to *Battery Energy Control Module Replacement on page 9-451*.

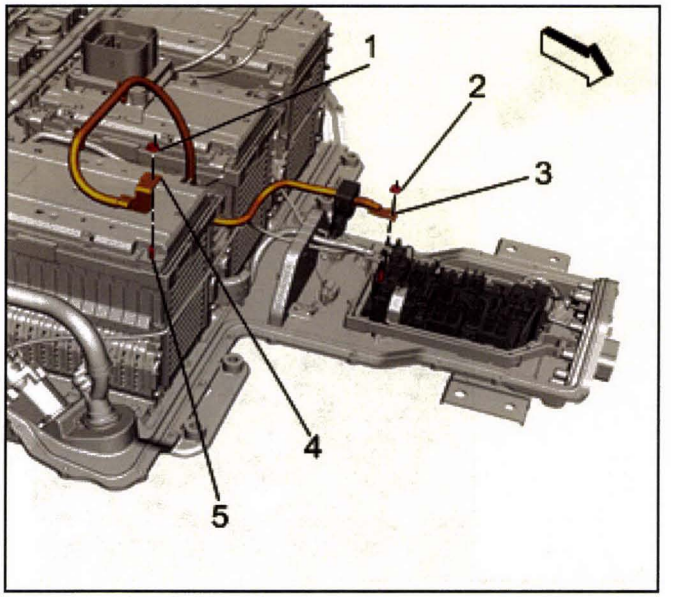

3707869

Note: Cover the battery cell stud (5) with protective tape that is UL® listed or insulation tape that is rated at a minimum of 600V.

8. Remove the fastener (1) and remove the drive motor battery negative cable terminal (4), from the battery cell stud (5).

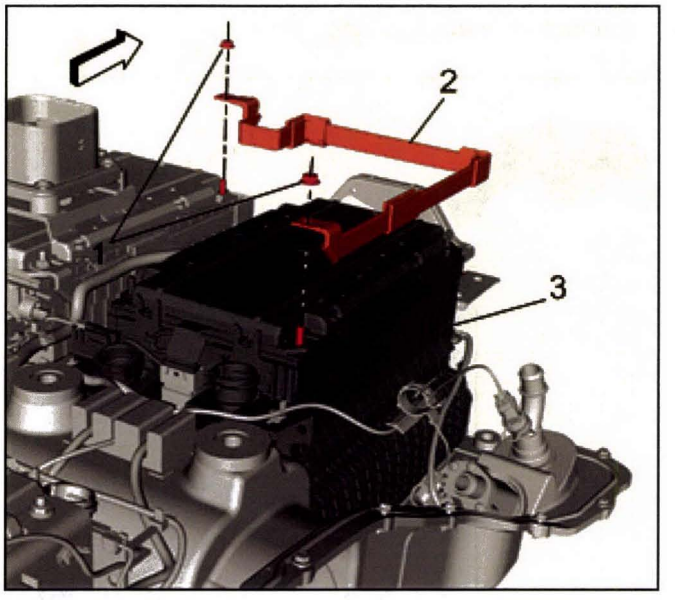

3715434

Note: Cover the battery cell studs with protective tape.

9. Remove the fasteners (1) and remove the high voltage cable (2) from battery cell 1 (3) and battery cell 2.

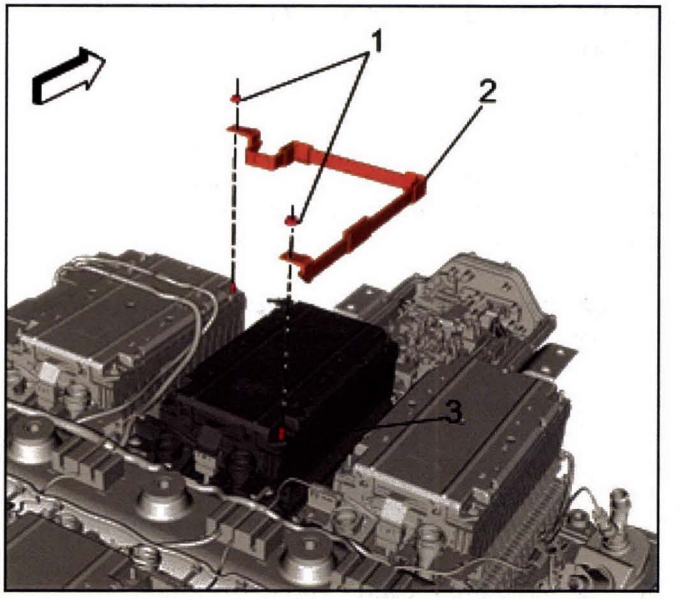

3716442

10. Remove the fasteners (1) and remove the high voltage cable (2) from battery cell 2 (3) and battery cell 3.

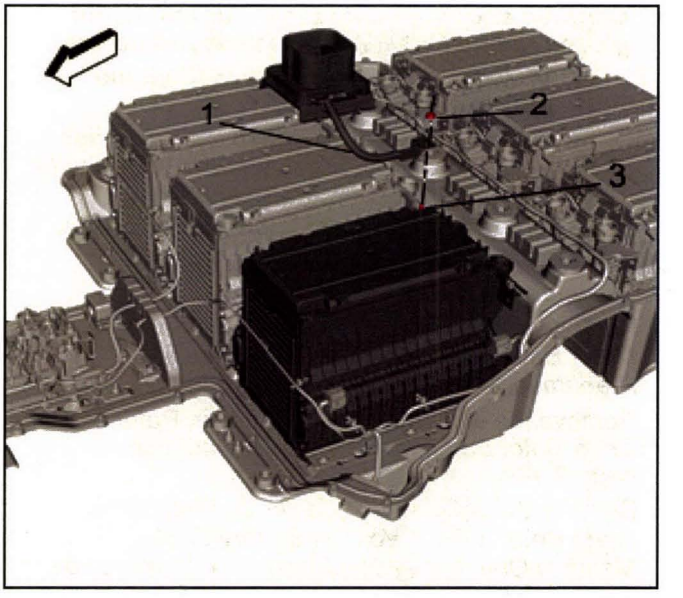

3718154

11. Remove the fastener (2) and remove the battery disconnect high voltage cable (1) from the battery cell 3 stud (3).

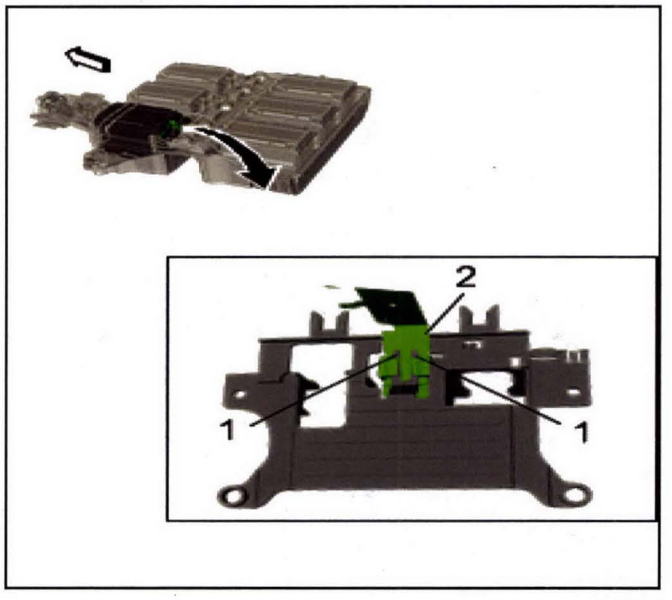

3718155

12. Depress the retaining tabs (1) and reposition the connector being careful not to tear the thin film harness (2).

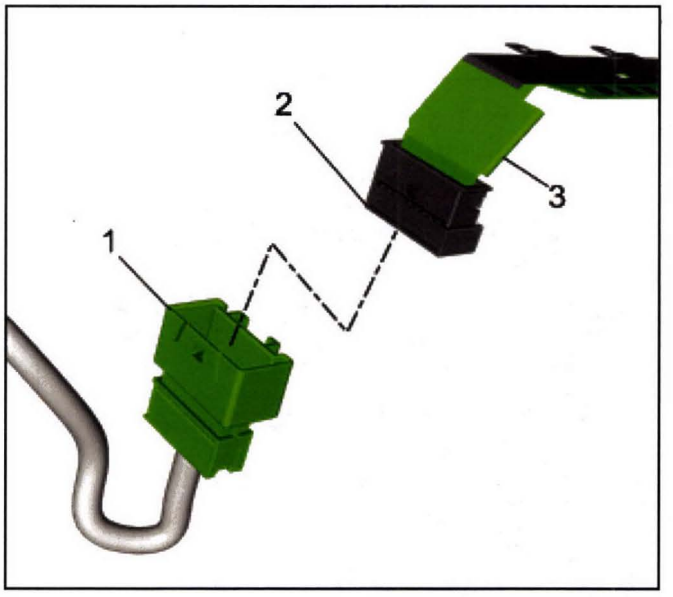

3715437

13. Disconnect the auxiliary battery wiring harness connector (1) from the battery cell 3 connector (2) being careful not to tear the thin film harness (3).

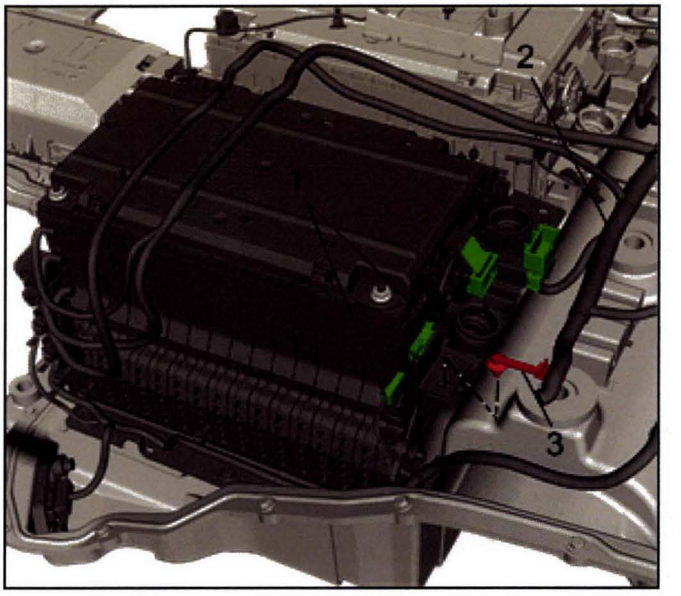

3718156

14. Disconnect the thermistor sensor connector (1) and detach the auxiliary battery wiring harness retainer (3) from the battery cell 3 bracket.
15. Disconnect any harness retainers attached to battery cell (3).

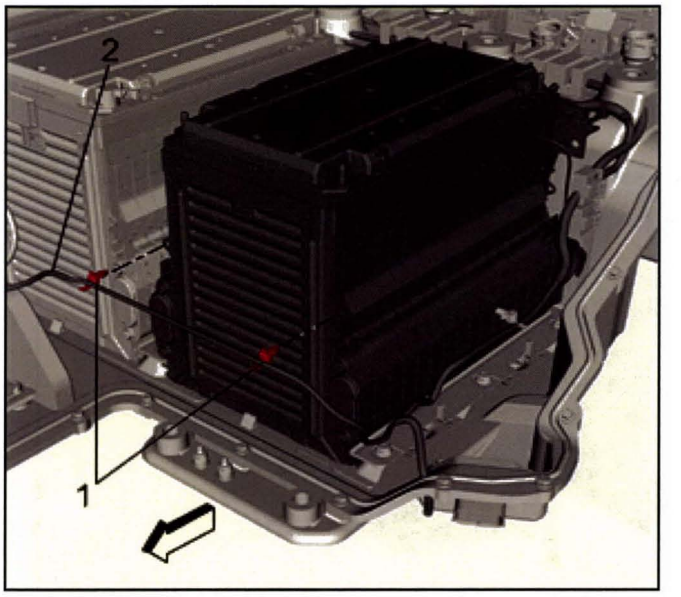

3718161

16. Detach the harness retainers (1) and reposition the auxiliary battery wiring harness (2).

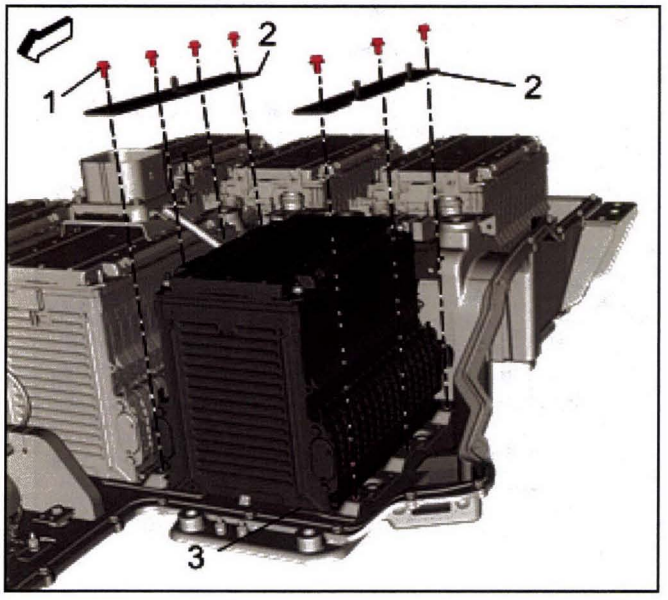

3718165

Note: Marked side of brackets face upwards when installing.

17. Remove the fasteners (1) and remove the battery hold down brackets (2) securing the battery cell 3 (3) to the tray.

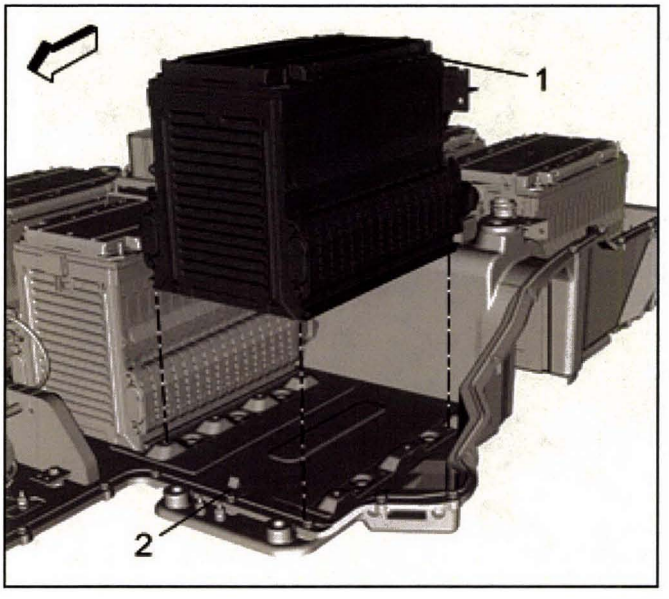

3718168

18. Remove the battery cell (1) from the drive motor battery assembly.

Installation Procedure

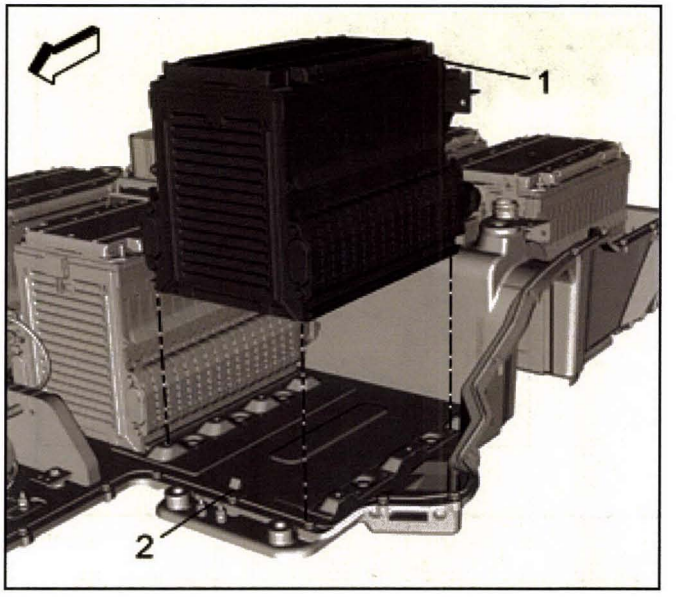

3718168

1. Install the cell battery (1) into the drive motor battery assembly with the front edge of the battery cell pushed up against the backstop tab (2).

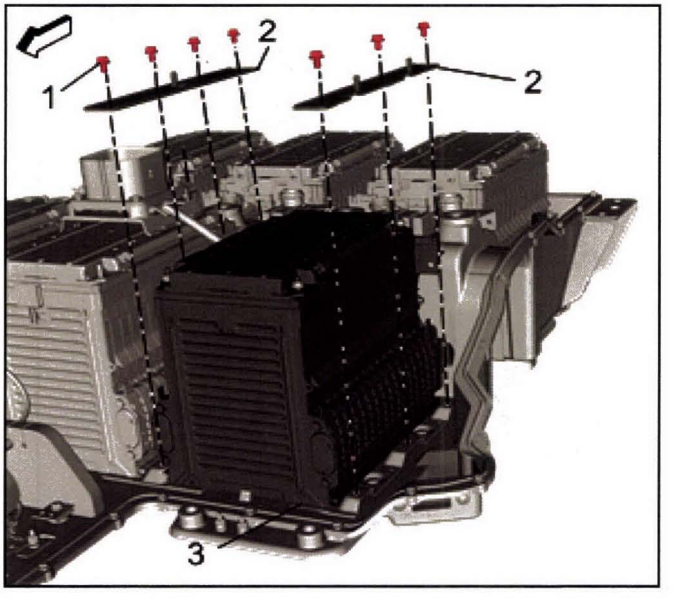

3718165

Caution: Refer to *Fastener Caution on page 0-8*.

2. Install the battery cell hold down brackets (2) with the marked up side facing up. Tighten the fasteners (1) to **9** N•m **(80 lb in)**.

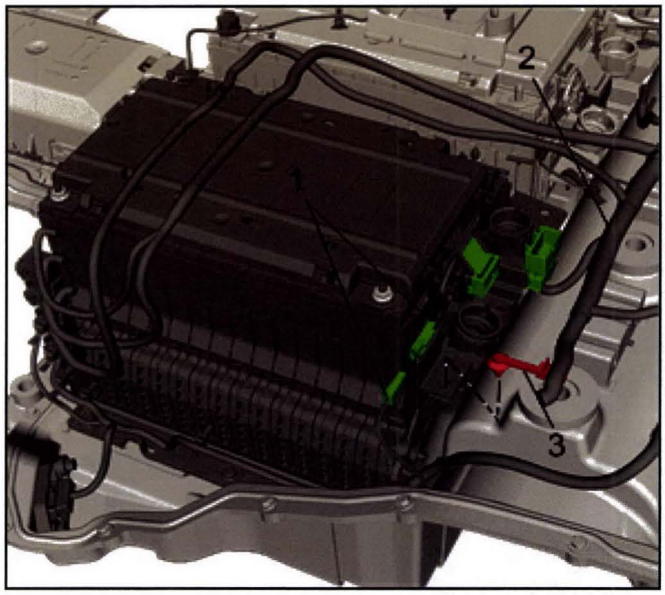

3718156

3. Connect the battery cell thermistor sensor connector (1) and install the auxiliary battery wiring harness retainer (3) to the battery cell bracket.
4. Attach any harness retainers to battery cell 3.

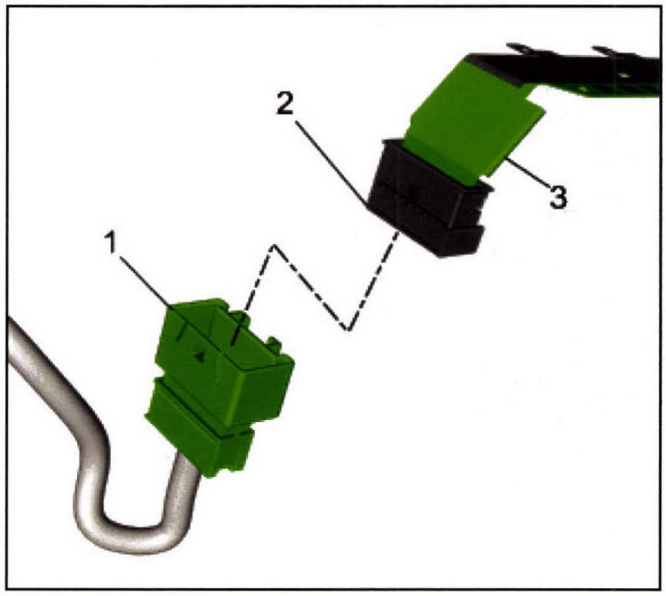

3715437

5. Connect the battery cell connector (2) to the auxiliary battery wiring harness connector (1) taking care not to tear the film harness (3).

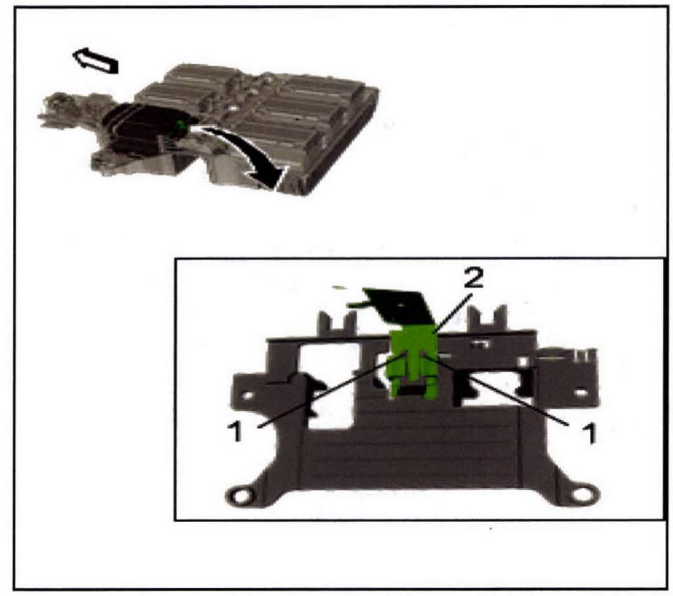

3718155

6. Install the battery cell connector onto the bracket retaining tabs (1).

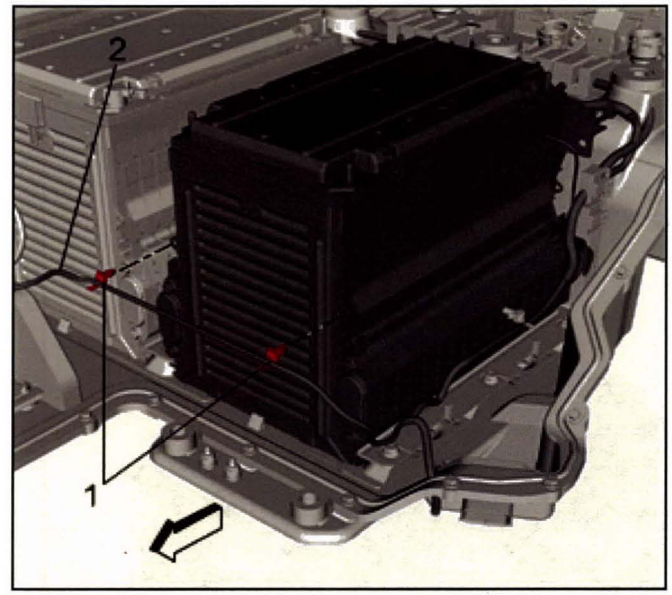

3718161

7. Install the auxiliary battery wiring harness retainers (1) to the front of battery cell 3.

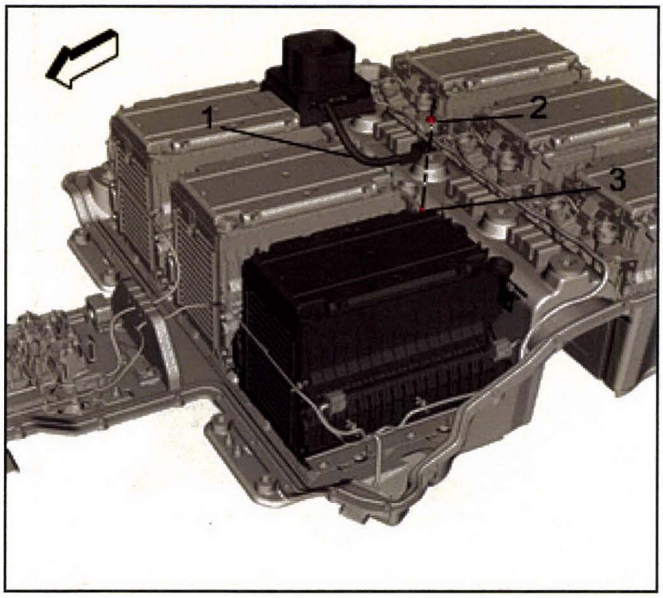

3718154

Note: Critical high voltage fastener. Perform second torque verification check following re-assembly.

8. Install the battery disconnect high voltage cable (1) to the battery cell 3 stud (3) and tighten the fastener (2) to **9** N•m **(80 lb in)**.

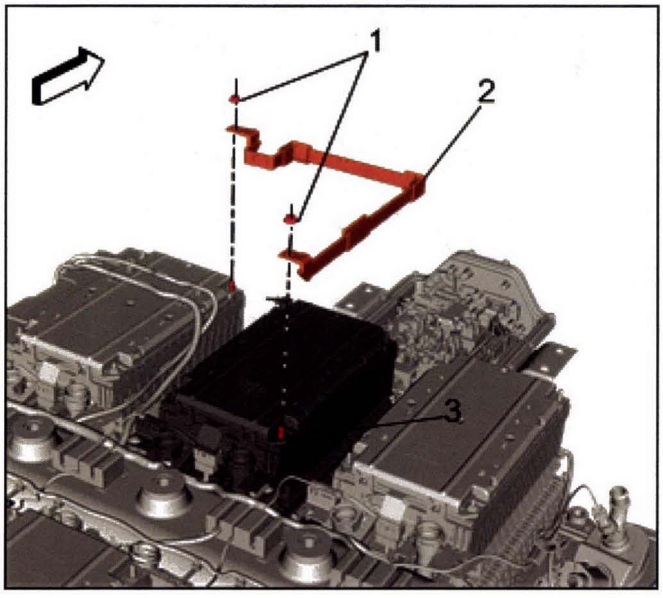

3716442

Note: Critical high voltage fastener. Perform second torque verification check following re-assembly.

9. Install the high voltage cable (2) to battery cell 2 (3) and battery cell 3. Tighten the fasteners (1) to **9** N•m **(80 lb in)**.

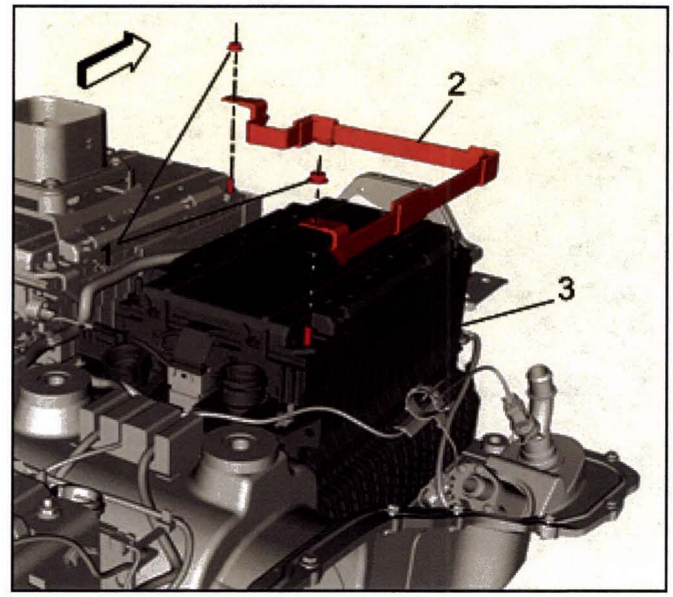

3715434

Note: Critical high voltage fastener. Perform second torque verification check following re-assembly.

10. Install the high voltage battery cable (2) onto battery cell 1 and battery cell 2 . Tighten the fasteners (1) to **9** N•m **(80 lb in)**.

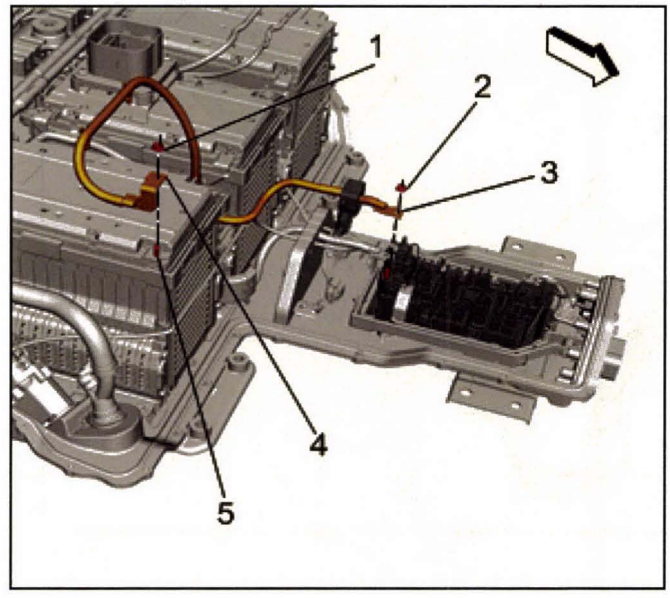

3707869

Note: Critical high voltage fastener. Perform second torque verification check following re-assembly.

11. Install the drive motor battery negative cable terminal (4) to the battery cell 1 stud (5). Tighten the fastener (1) to **9** N•m **(80 lb in)**.
12. Install the battery energy control module. Refer to *Battery Energy Control Module Replacement on page 9-451*.

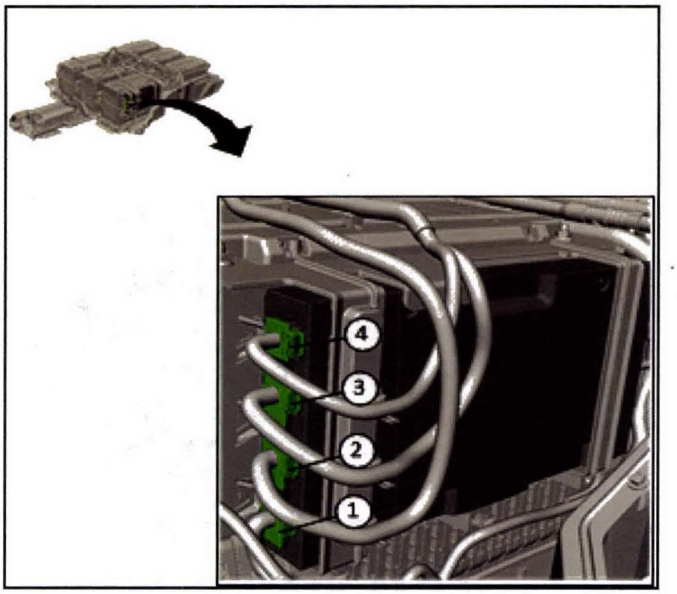

4072893

Note: Damage to the battery energy control module may occur if connector installation sequence to the module is not followed. Battery energy control module connector installation sequence is reverse of the removal sequence and must be performed after all sections have been reconnected.

Note: Damage to the battery energy control module may occur if connector sequence to the module is not followed.

13. Connect the battery energy control module connectors in the sequence shown to the battery energy control module.

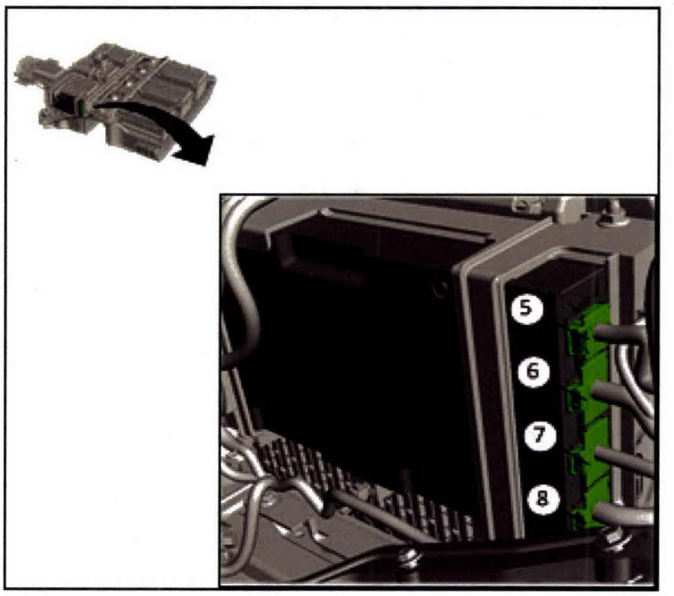

4072895

Note: Damage to the battery energy control module may occur if connector sequence to the module is not followed.

14. Connect the battery energy control module connectors in the sequence shown to the battery energy control module.
15. Install the cell battery cooling manifold inlet hose. Refer to *High Voltage Battery Cooling Manifold Inlet Hose Replacement (Coolant to all Battery Cells) on page 9-336* or *High Voltage Battery Cooling Manifold Inlet Hose Replacement (Individual Battery Cell Coolant Inlet Hose) on page 9-338*.
16. Install the cell battery cooling manifold outlet hose. Refer to *High Voltage Battery Cooling Manifold Outlet Hose Replacement (Coolant to all Battery Cells) on page 9-339* or *High Voltage Battery Cooling Manifold Outlet Hose Replacement (Individual Battery Cell Coolant Outlet Hose) on page 9-342*.
17. Perform the hybrid battery pack coolant passage leak test. Refer to *Hybrid Battery Pack Coolant Passage Leak Test on page 9-257*.
18. Perform the cell battery balancing if replaced. refer to *Hybrid/EV Battery Cell Balancing on page 9-541*.
19. Install the drive motor battery cover. Refer to *Drive Motor Battery Cover Replacement on page 9-449*.
20. Install the drive motor battery. Refer to *Drive Motor Battery Replacement and Shipping Preparation on page 9-524*.

Cell Battery Replacement (Battery Cell 4)

Removal Procedure

Danger: Always perform the High Voltage Disabling procedure prior to servicing any High Voltage component or connection. Personal Protection Equipment (PPE) and proper procedures must be followed.

The High Voltage Disabling procedure includes the following steps:

- ***Identify how to disable high voltage.***
- ***Identify how to test for the presence of high voltage.***
- ***Identify condition under which high voltage is always present and personal protection equipment (PPE) and proper procedures must be followed.***

Before working on any high voltage system, be sure to wear the following Personal Protection Equipment:

- ***Safety glasses with appropriate side shields when within 15 meters (50 feet) of the vehicle, either indoors or outdoors.***
- ***Certified and up-to-date Class "0" Insulation gloves rated at 1000V with leather protectors.***
  - ***Visually and functionally inspect the gloves before use.***
  - ***Wear the Insulation gloves with leather protectors at all times when working with the high voltage battery assembly, whether the system is energized or not.***

Failure to follow the procedures may result in serious injury or death.

1. Remove the drive motor battery. Refer to *Drive Motor Battery Replacement and Shipping Preparation on page 9-524*.
2. Remove the drive motor battery cover. Refer to *Drive Motor Battery Cover Replacement on page 9-449*.
3. Remove the cell battery cooling manifold outlet hose. Refer to *High Voltage Battery Cooling Manifold Outlet Hose Replacement (Coolant to all Battery Cells) on page 9-339* or *High Voltage Battery Cooling Manifold Outlet Hose Replacement (Individual Battery Cell Coolant Outlet Hose) on page 9-342*.
4. Remove the cell battery cooling manifold inlet hose. Refer to *High Voltage Battery Cooling Manifold Inlet Hose Replacement (Coolant to all Battery Cells) on page 9-336* or *High Voltage Battery Cooling Manifold Inlet Hose Replacement (Individual Battery Cell Coolant Inlet Hose) on page 9-338*.

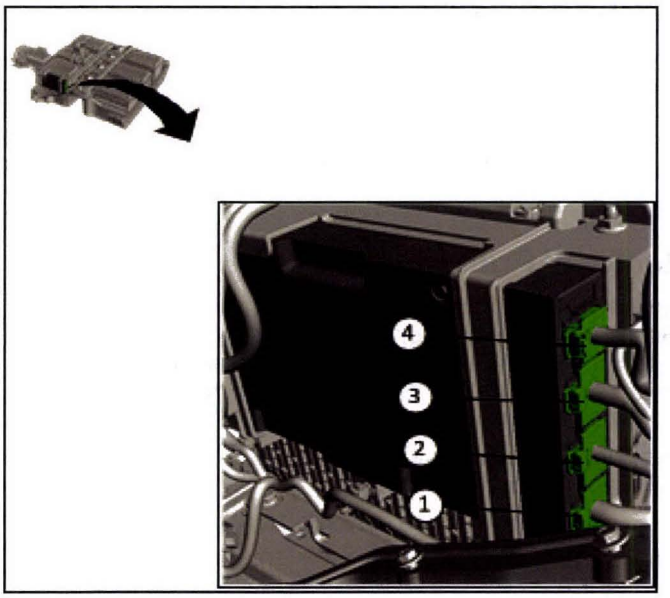

4072888

Note: Damage to the battery energy control module may occur if connector removal sequence to the module is not followed. Battery energy control module connector installation sequence is reverse of the removal sequence and must be performed after all sections have been reconnected.

5. Disconnect the battery energy control module connectors in the sequence shown.

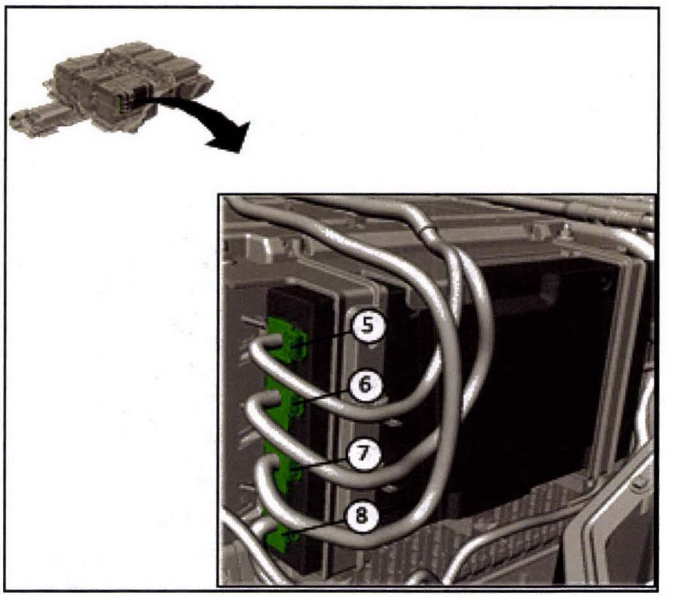

4072891

Note: Damage to the battery energy control module may occur if connector sequence to the module is not followed.

6. Disconnect the battery energy control module connectors in the sequence shown.

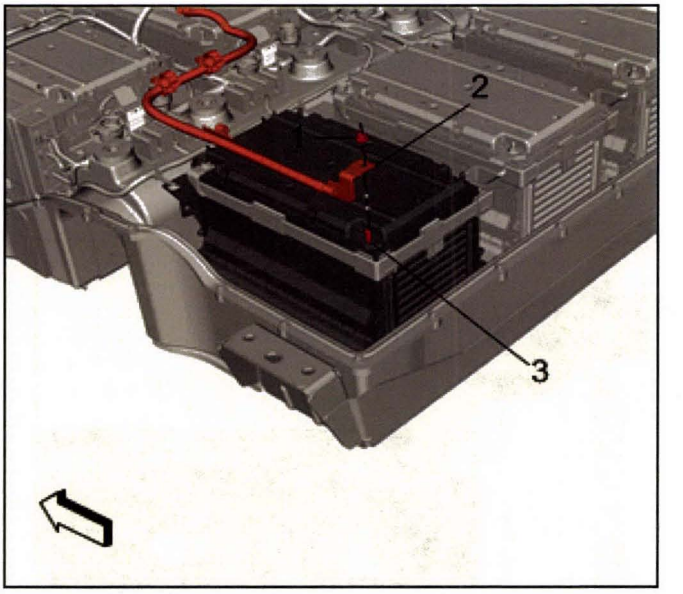

3719053

Note: Cover the battery cell stud (3) with protective tape that is UL® listed or insulation tape that is rated at a minimum of 600V.

7. Remove the fastener (1) and remove the high voltage battery disconnect cable terminal (2), from the battery cell 4 (3).

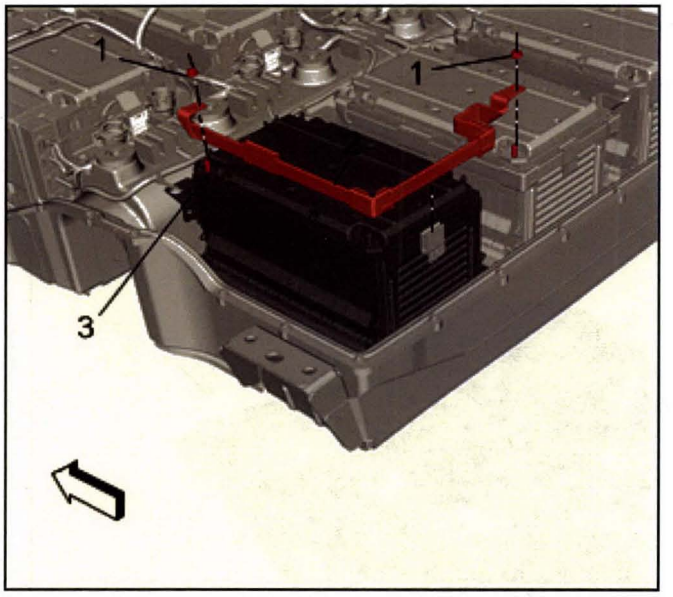

3719055

Note: Cover the battery cell studs with protective tape that is UL® listed or insulation tape that is rated at a minimum of 600V.

8. Remove the fasteners (1) and remove the high voltage cable (2) from battery cell 4 (3) and battery cell 5.

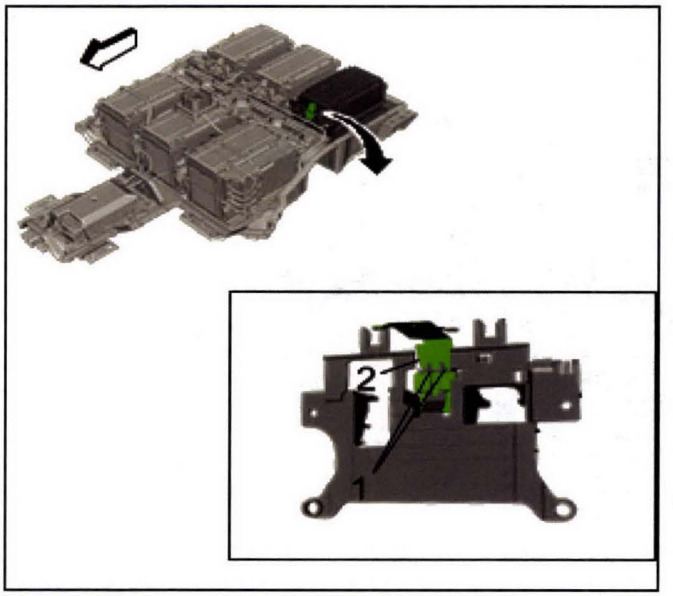

3719192

9. Depress the retaining tabs (1) and reposition the connector being careful not to tear the thin film harness (2).

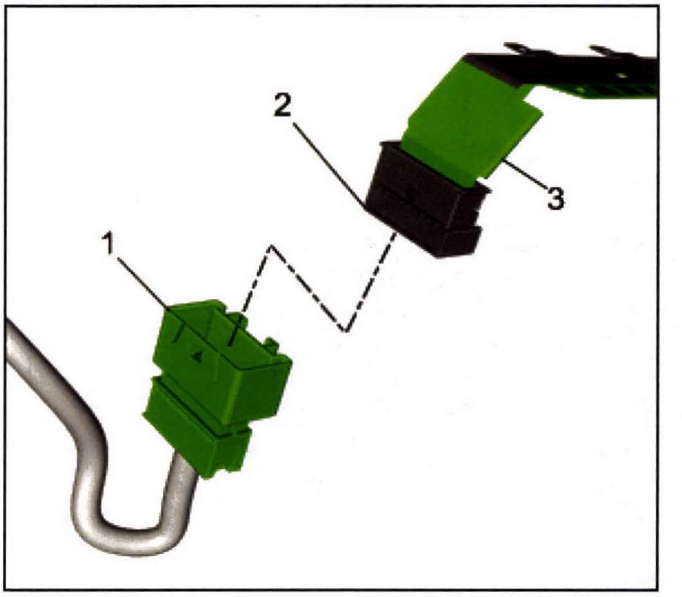

3715437

10. Disconnect the auxiliary battery wiring harness connector (1) from the battery cell 4 connector (2) being careful not to tear the thin film harness (3).

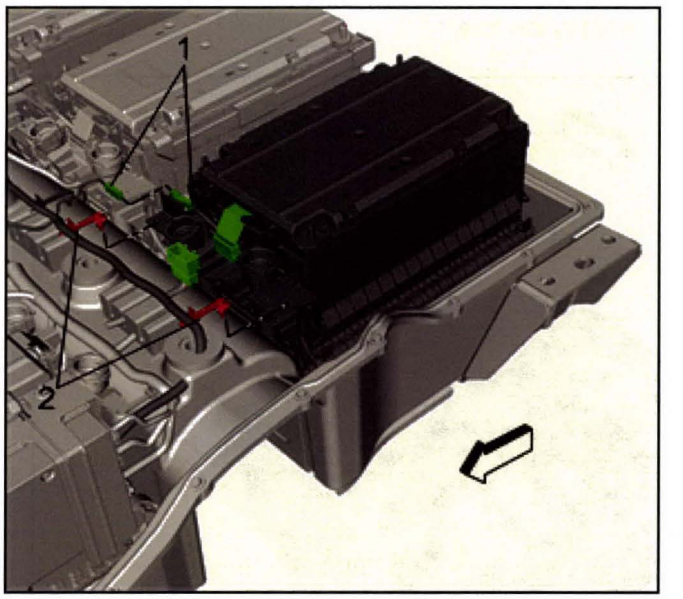

3719194

11. Disconnect the thermistor sensor connector (1) and detach the auxiliary battery wiring harness retainers (3) from the battery cell 4 bracket.

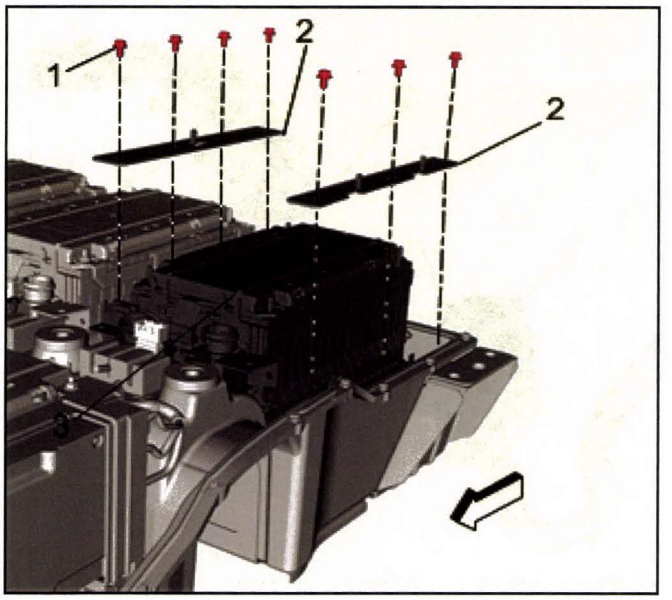

3719197

Note: Marked side of brackets face upwards when installing.

12. Remove the fasteners (1) and remove the battery hold down brackets (2) securing the battery cell 4 (3) to the tray.

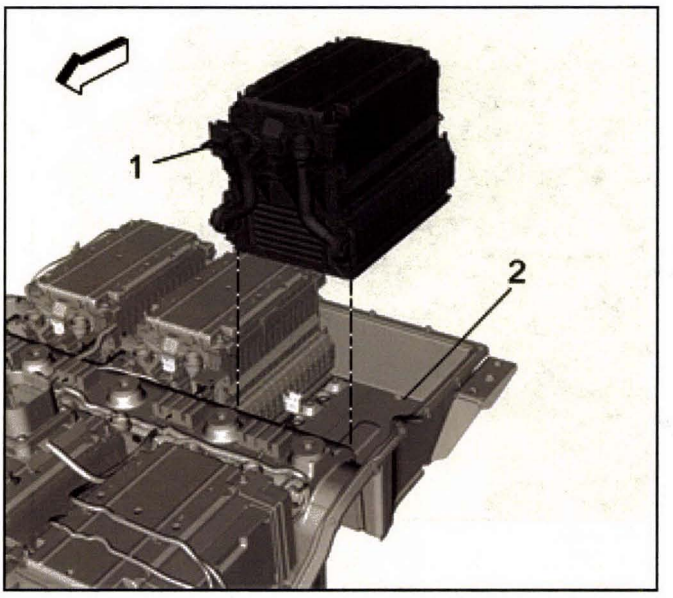

3719199

13. Remove the battery cell (1) from the drive motor battery assembly.

Installation Procedure

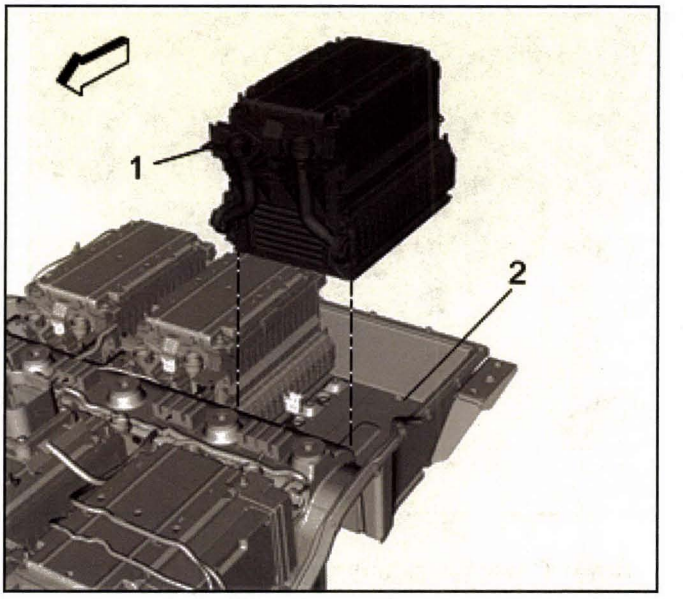

3719199

1. Install the battery cell (1) into the drive motor battery assembly with the front edge of the battery cell pushed up against the backstop tab (2).

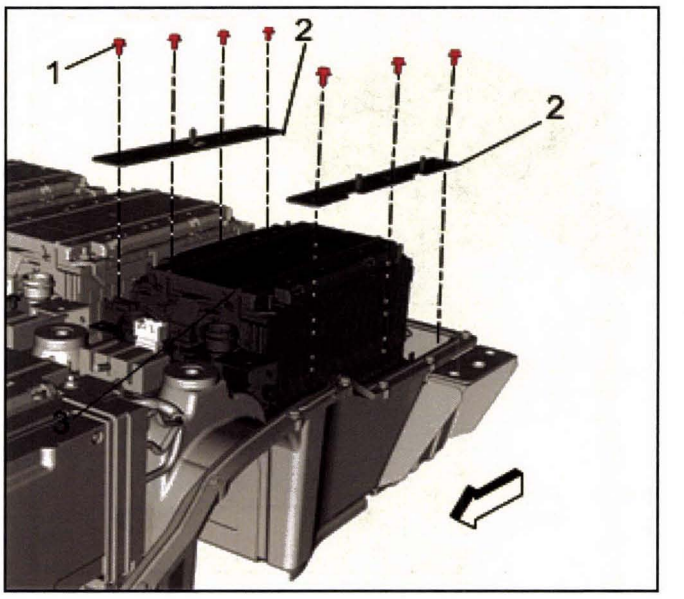

3719197

Caution: Refer to *Fastener Caution on page 0-8*.

2. Install the battery cell hold down brackets (2) with the marked up side facing up. Tighten the fasteners (1) to **9 N•m (80 lb in)**.

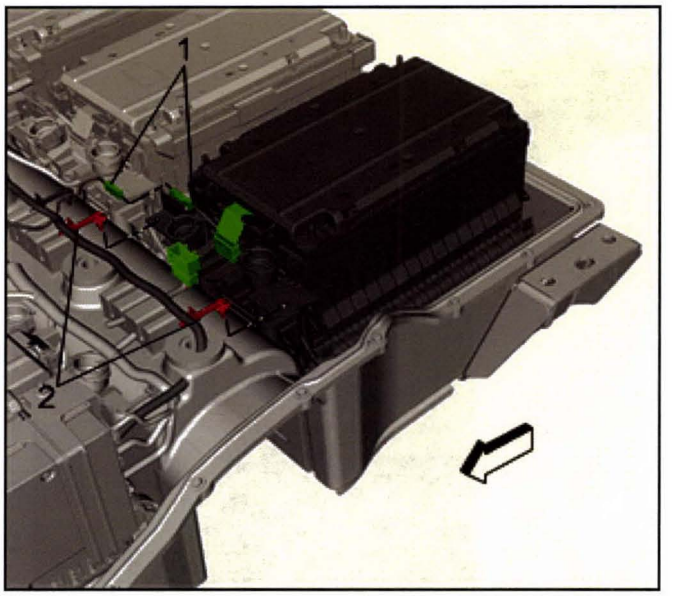

3719194

3. Connect the battery cell thermistor sensor connector (1) and install the auxiliary battery wiring harness retainers (2) to the battery cell bracket.

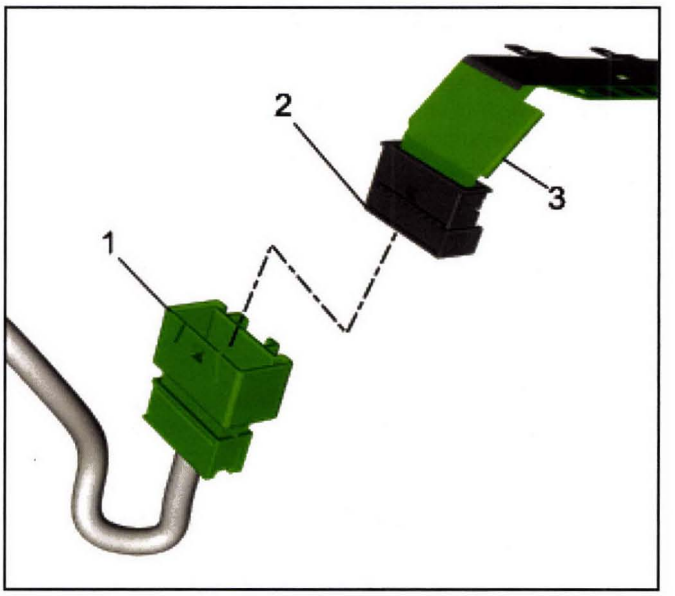

3715437

4. Connect the battery cell connector (2) to the auxiliary battery wiring harness connector (1) taking care not to tear the film harness (3).

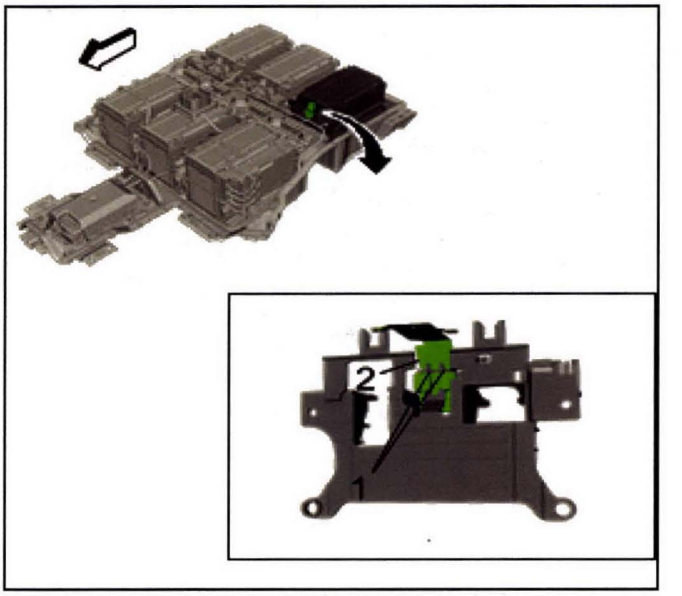

3719192

5. Install the battery cell connector onto the bracket retaining tabs (1).

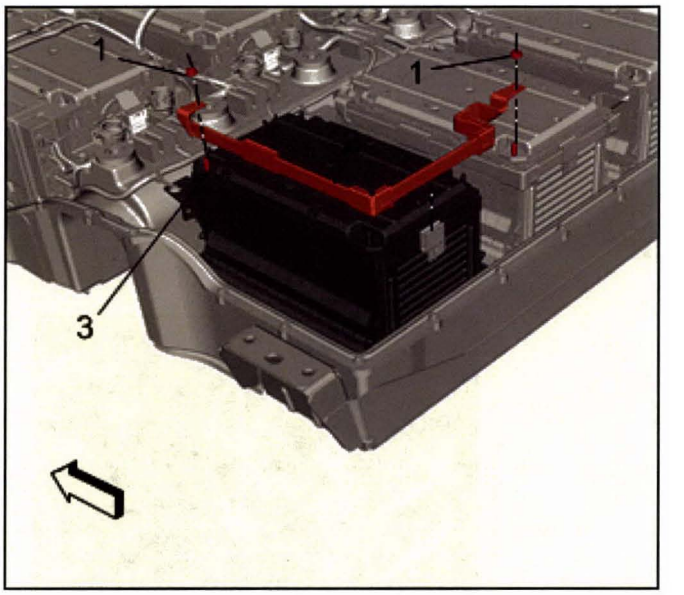

3719055

Note: Critical high voltage fastener. Perform second torque verification check following re-assembly.

6. Install the high voltage battery cable (2) to the battery cell 4 (3) and battery cell 5. Tighten the fasteners (1) to **9** N•m **(80 lb in)**.

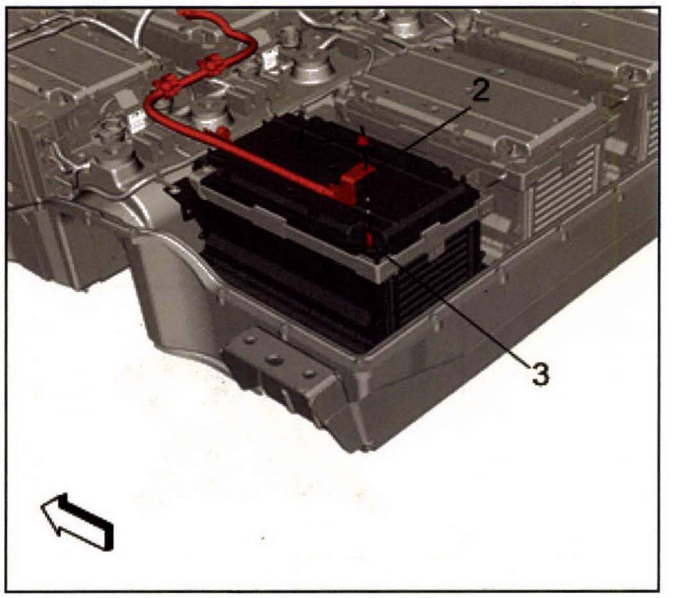

3719053

Note: Critical high voltage fastener. Perform second torque verification check following re-assembly.

7. Install the high voltage battery disconnect cable terminal (2), to the battery cell stud (3), and tighten the fastener (1) to **9** N•m **(80 lb in)**.

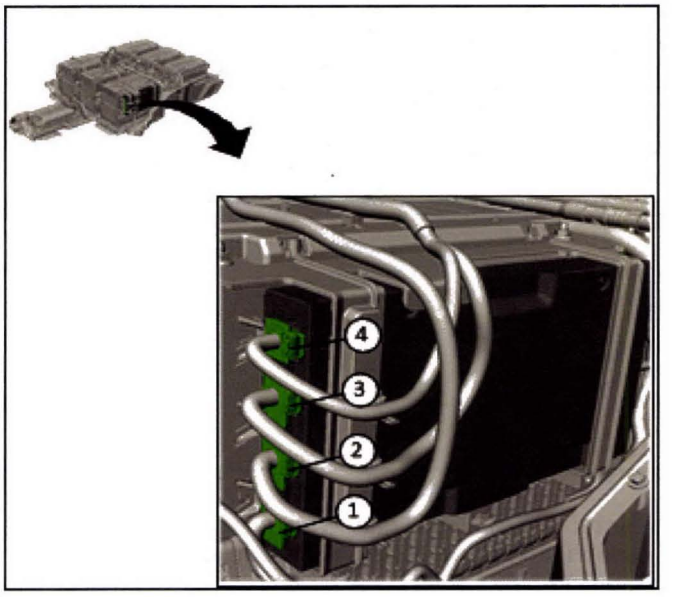

4072893

Note: Damage to the battery energy control module may occur if connector installation sequence to the module is not followed. Battery energy control module connector installation sequence is reverse of the removal sequence and must be performed after all sections have been reconnected.

Note: Damage to the battery energy control module may occur if connector sequence to the module is not followed.

8. Connect the battery energy control module connectors in the sequence shown to the battery energy control module.

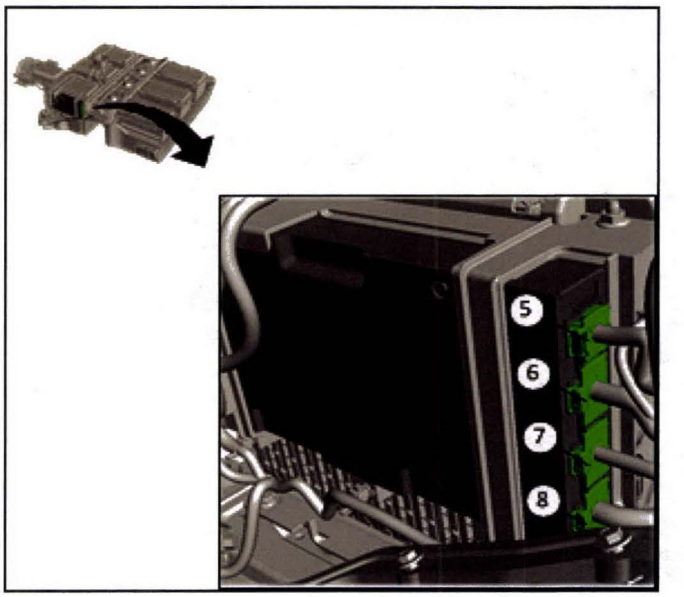

4072895

Note: Damage to the battery energy control module may occur if connector sequence to the module is not followed.

9. Connect the battery energy control module connectors in the sequence shown to the battery energy control module.
10. Install the cell battery cooling manifold inlet hose. Refer to *High Voltage Battery Cooling Manifold Inlet Hose Replacement (Coolant to all Battery Cells) on page 9-336* or *High Voltage Battery Cooling Manifold Inlet Hose Replacement (Individual Battery Cell Coolant Inlet Hose) on page 9-338*.
11. Install the cell battery cooling manifold outlet hose. Refer to *High Voltage Battery Cooling Manifold Outlet Hose Replacement (Coolant to all Battery Cells) on page 9-339* or *High Voltage Battery Cooling Manifold Outlet Hose Replacement (Individual Battery Cell Coolant Outlet Hose) on page 9-342*.
12. Perform the hybrid battery pack coolant passage leak test. Refer to *Hybrid Battery Pack Coolant Passage Leak Test on page 9-257*.
13. Perform the cell battery balancing if replaced. refer to *Hybrid/EV Battery Cell Balancing on page 9-541*.
14. Install the drive motor battery cover. Refer to *Drive Motor Battery Cover Replacement on page 9-449*.
15. Install the drive motor battery. Refer to *Drive Motor Battery Replacement and Shipping Preparation on page 9-524*.

Cell Battery Replacement (Battery Cell 5)

Removal Procedure

Danger: Always perform the High Voltage Disabling procedure prior to servicing any High Voltage component or connection. Personal Protection Equipment (PPE) and proper procedures must be followed.

The High Voltage Disabling procedure includes the following steps:

- ***Identify how to disable high voltage.***
- ***Identify how to test for the presence of high voltage.***
- ***Identify condition under which high voltage is always present and personal protection equipment (PPE) and proper procedures must be followed.***

Before working on any high voltage system, be sure to wear the following Personal Protection Equipment:

- ***Safety glasses with appropriate side shields when within 15 meters (50 feet) of the vehicle, either indoors or outdoors.***
- ***Certified and up-to-date Class "0" Insulation gloves rated at 1000V with leather protectors.***
  - ***Visually and functionally inspect the gloves before use.***
  - ***Wear the Insulation gloves with leather protectors at all times when working with the high voltage battery assembly, whether the system is energized or not.***

Failure to follow the procedures may result in serious injury or death.

1. Remove the drive motor battery. Refer to *Drive Motor Battery Replacement and Shipping Preparation on page 9-524*.
2. Remove the drive motor battery cover. Refer to *Drive Motor Battery Cover Replacement on page 9-449*.
3. Remove the cell battery cooling manifold outlet hose. Refer to *High Voltage Battery Cooling Manifold Outlet Hose Replacement (Coolant to all Battery Cells) on page 9-339* or *High Voltage Battery Cooling Manifold Outlet Hose Replacement (Individual Battery Cell Coolant Outlet Hose) on page 9-342*.
4. Remove the cell battery cooling manifold inlet hose. Refer to *High Voltage Battery Cooling Manifold Inlet Hose Replacement (Coolant to all Battery Cells) on page 9-336* or *High Voltage Battery Cooling Manifold Inlet Hose Replacement (Individual Battery Cell Coolant Inlet Hose) on page 9-338*.

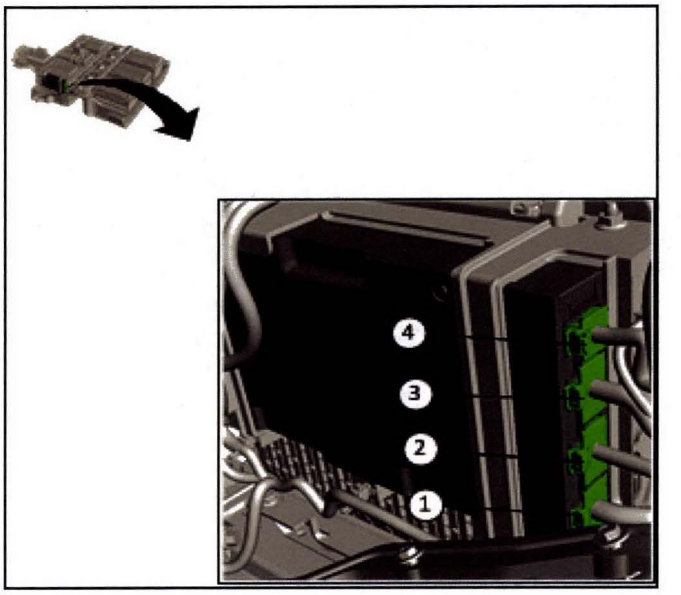

4072888

Note: Damage to the battery energy control module may occur if connector removal sequence to the module is not followed. Battery energy control module connector installation sequence is reverse of the removal sequence and must be performed after all sections have been reconnected.

5. Disconnect the battery energy control module connectors in the sequence shown.

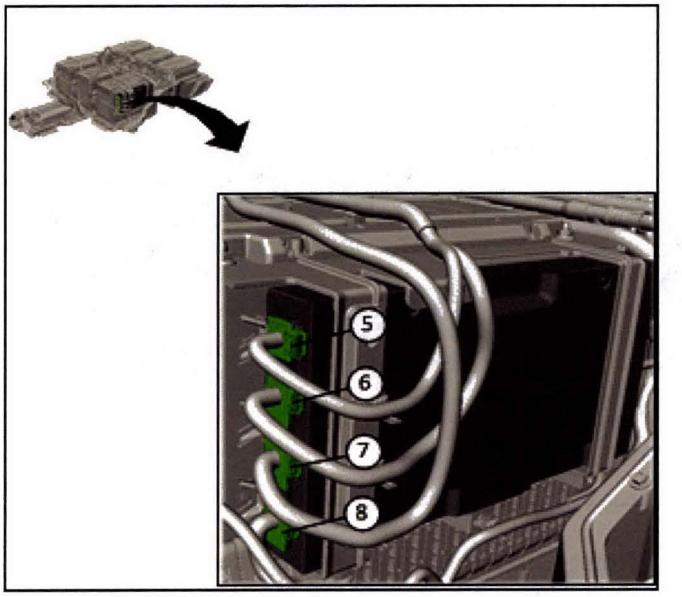

4072891

Note: Damage to the battery energy control module may occur if connector sequence to the module is not followed.

6. Disconnect the battery energy control module connectors in the sequence shown.

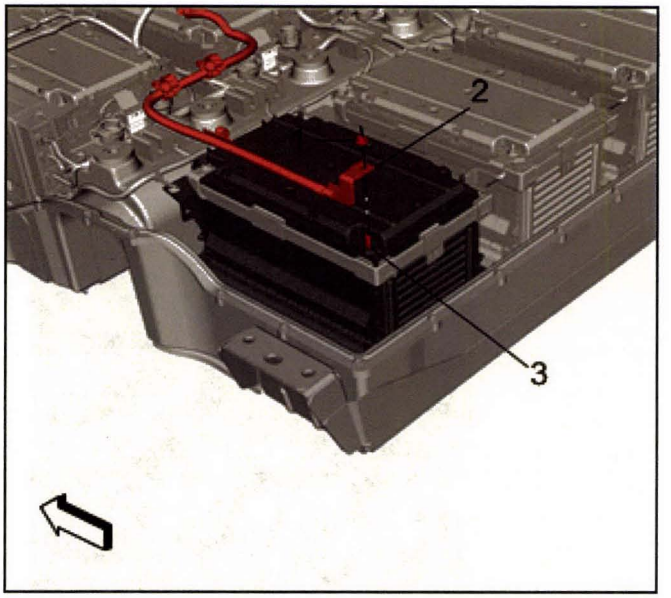

3719053

Note: Cover the battery cell stud (3) with protective tape that is UL® listed or insulation tape that is rated at a minimum of 600V.

7. Remove the fastener (1) and remove the high voltage battery disconnect cable terminal (2), from the battery cell stud (3).

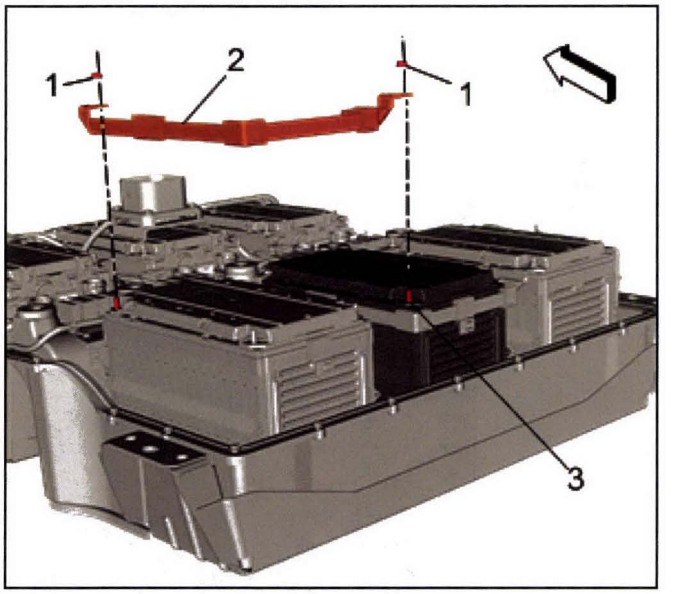

3722919

Note: Cover the battery cell studs with protective tape that is UL® listed or insulation tape that is rated at a minimum of 600V.

8. Remove the fasteners (1) and remove the high voltage cable (2) from battery cell 4 and battery cell 5 (3).

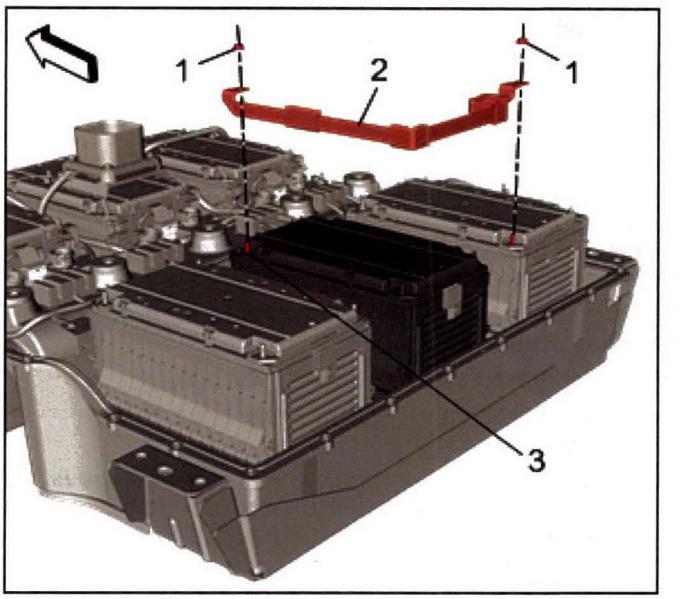

3722926

Note: Cover the battery cell studs with protective tape that is UL® listed or insulation tape that is rated at a minimum of 600V.

9. Remove the fasteners (1) and remove the high voltage cable (2) from battery cell 5 (3) and battery cell 6.

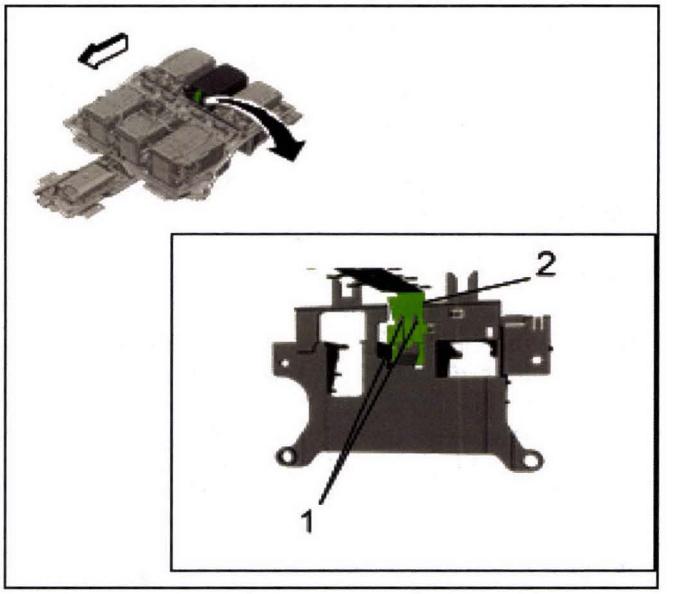

3722930

10. Depress the retaining tabs (1) and reposition the connector being careful not to tear the thin film harness (2).

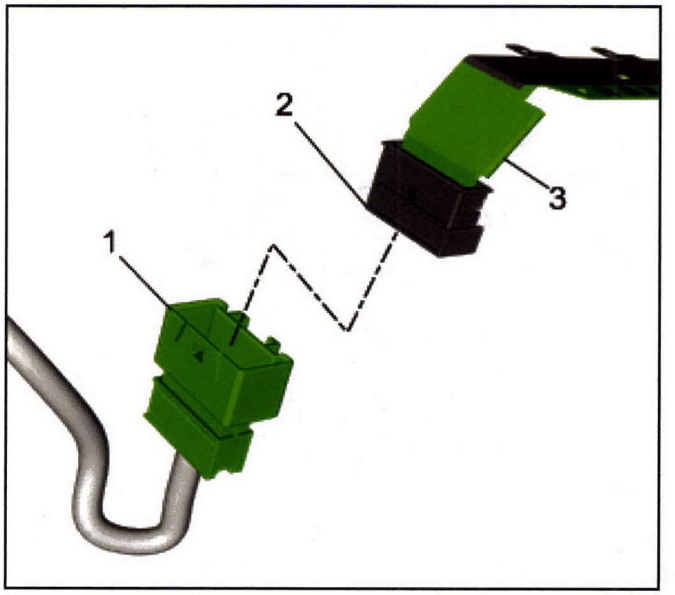

3715437

11. Disconnect the auxiliary battery wiring harness connector (1) from the battery cell 5 connector (2) being careful not to tear the thin film harness (3).

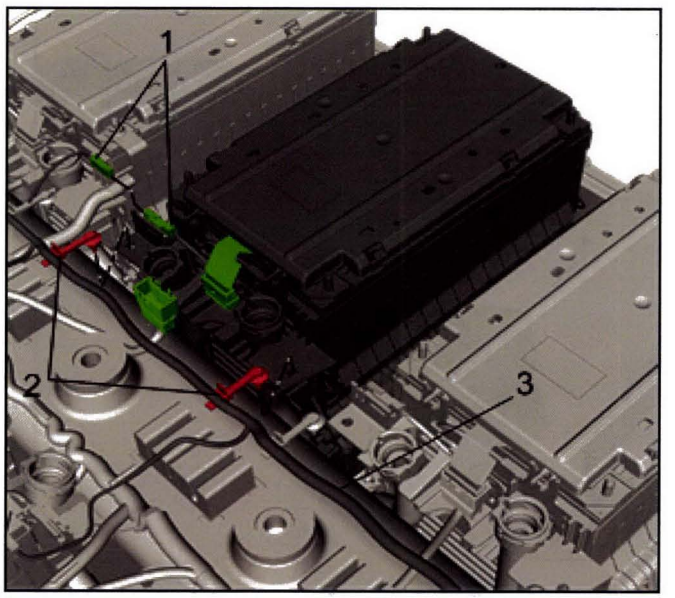

3722933

12. Disconnect the thermistor sensor connector (1) and detach the auxiliary battery wiring harness retainers (2) from the battery cell 5 bracket.

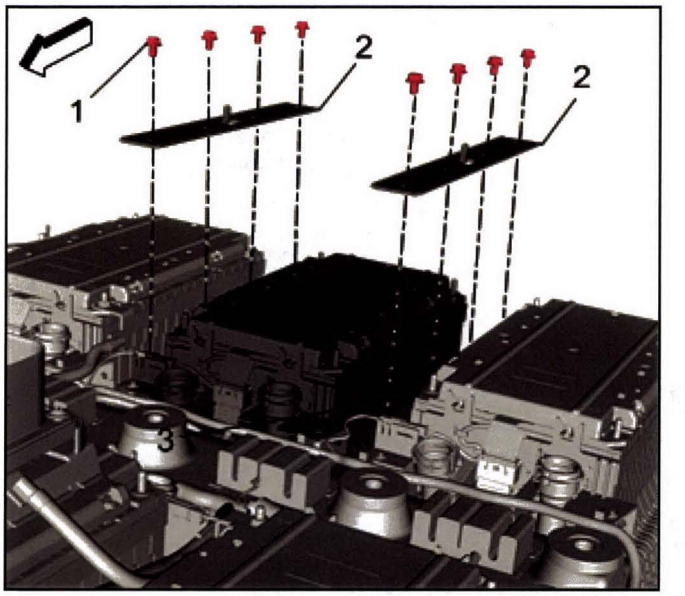

3722936

Note: Marked side of brackets face upwards when installing.

13. Remove the fasteners (1) and remove the battery hold down brackets (2) securing the battery cell 5 (3) to the tray.

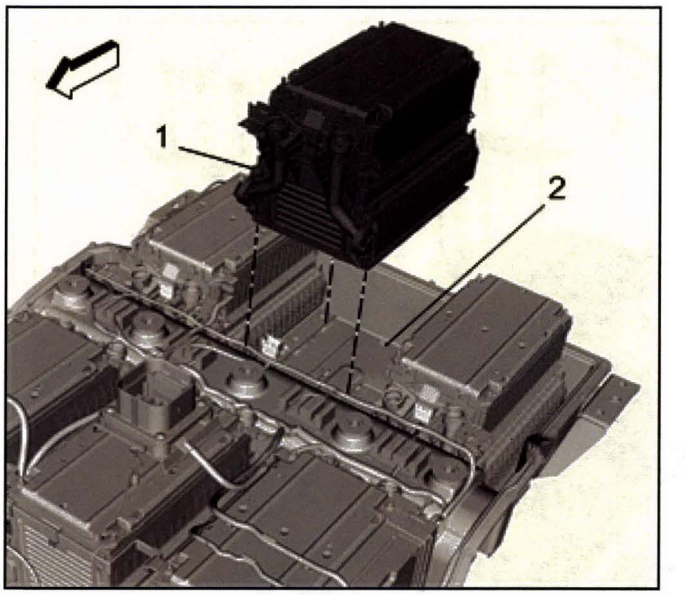

3722940

14. Remove the battery cell (1) from the drive motor battery assembly.

Installation Procedure

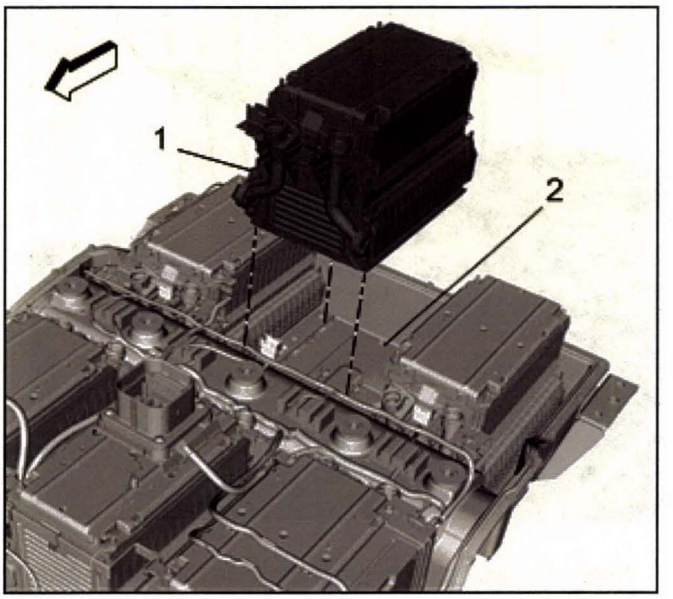

3722940

1. Install the battery cell (1) into the drive motor battery assembly with the front edge of the battery cell pushed up against the backstop tab (2).

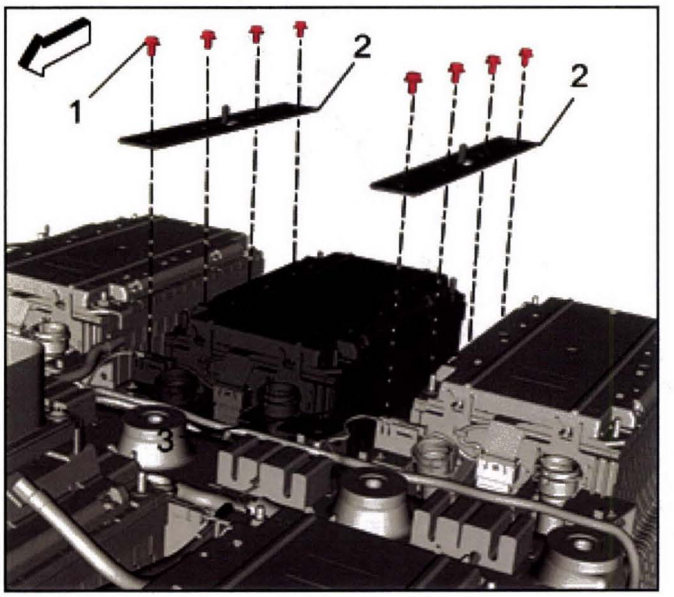

3722936

Caution: Refer to *Fastener Caution on page 0-8*.

2. Install the battery cell hold down brackets (2) with the marked up side facing up. Tighten the fasteners (1) to **9** N•m **(80 lb in)**.

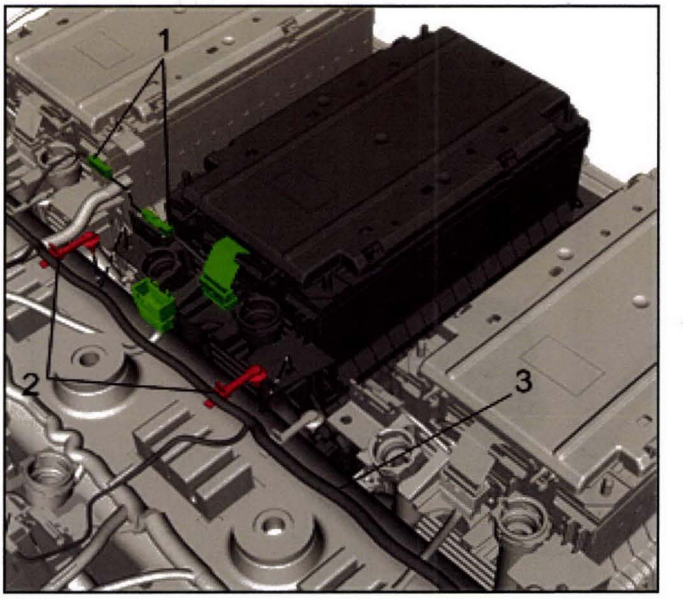

3722933

3. Connect the battery cell thermistor sensor connector (1) and install the auxiliary battery wiring harness retainers (2) to the battery cell bracket.

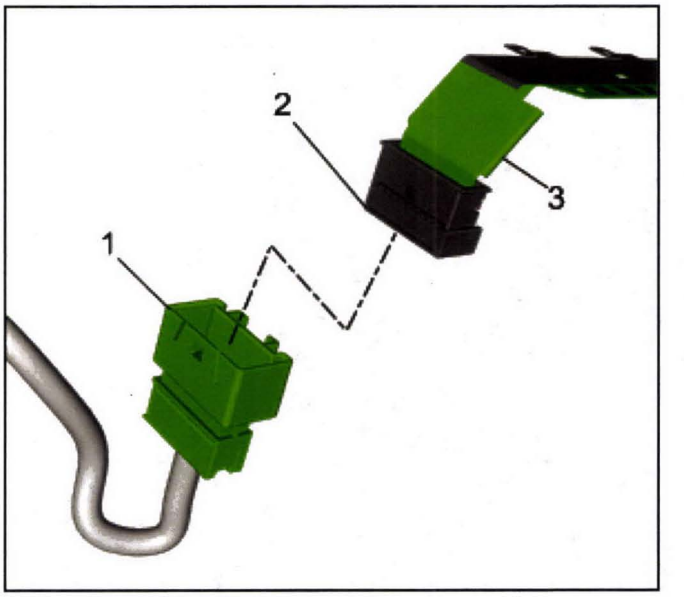

3715437

4. Connect the battery cell connector (2) to the auxiliary battery wiring harness connector (1) taking care not to tear the film harness (3).

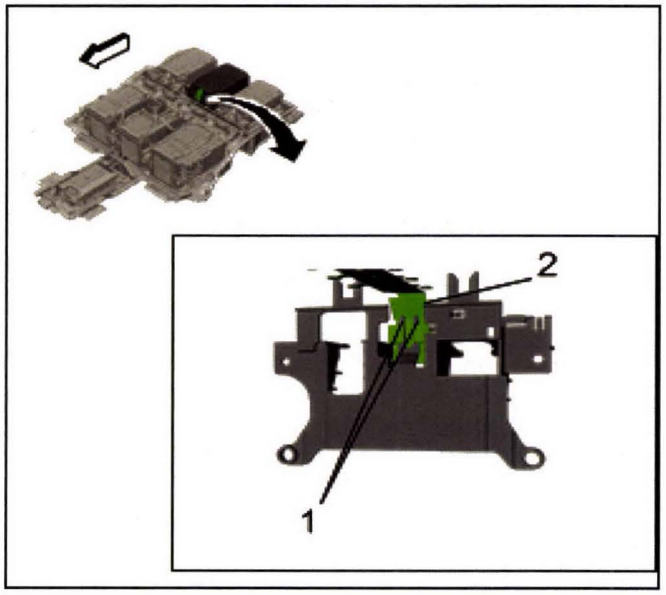

3722930

5. Install the battery cell connector onto the bracket retaining tabs (1).

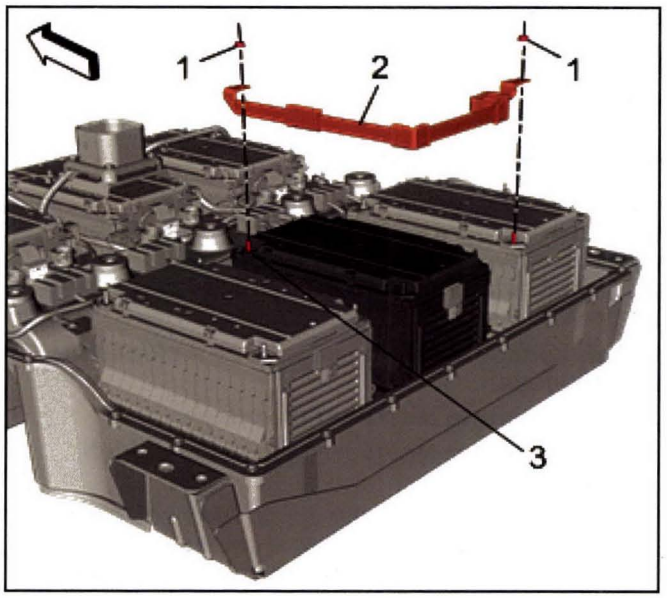

3722926

Note: Critical high voltage fastener. Perform second torque verification check following re-assembly.

6. Install the high voltage battery cable (2) to the battery cell 5 (3) and battery cell 6. Tighten the fasteners (1) to **9** N•m **(80 lb in)**.

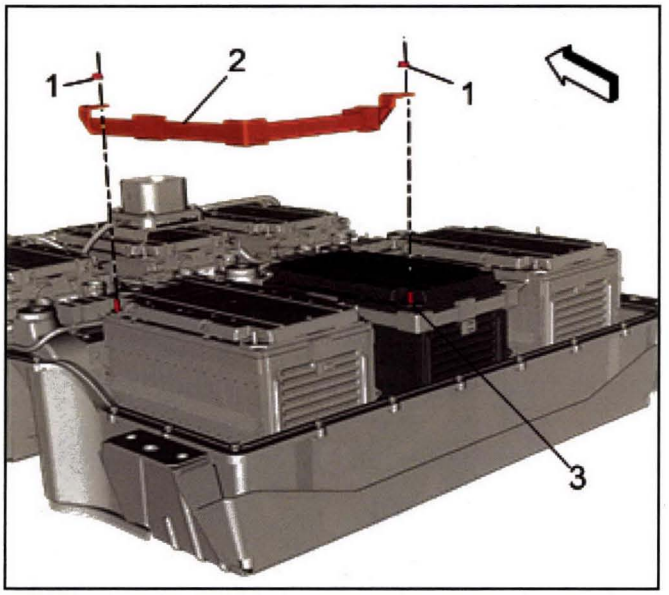

3722919

Note: Critical high voltage fastener. Perform second torque verification check following re-assembly.

7. Install the high voltage cable (2) to the battery cell 4 and battery cell 5 (3). Tighten the fasteners (1) to **9** N•m **(80 lb in)**.

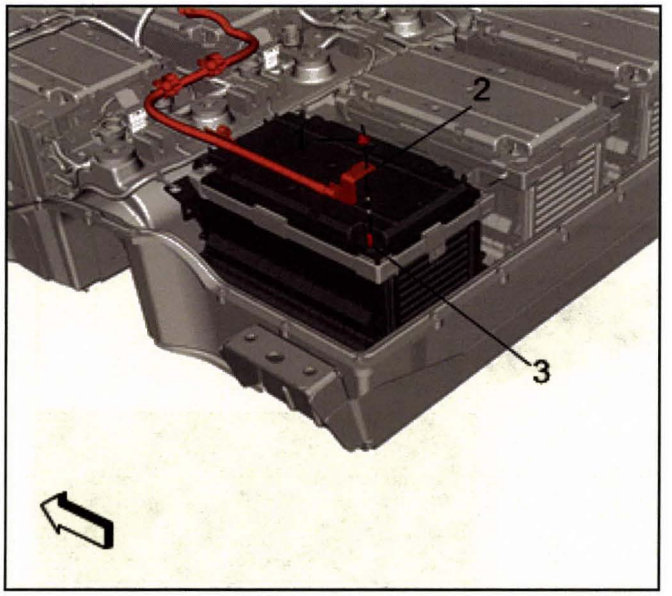

3719053

Note: Critical high voltage fastener. Perform second torque verification check following re-assembly.

8. Install the high voltage battery disconnect cable (2) to battery cell 4 (3). Tighten the fastener (1) to **9** N•m **(80 lb in)**.

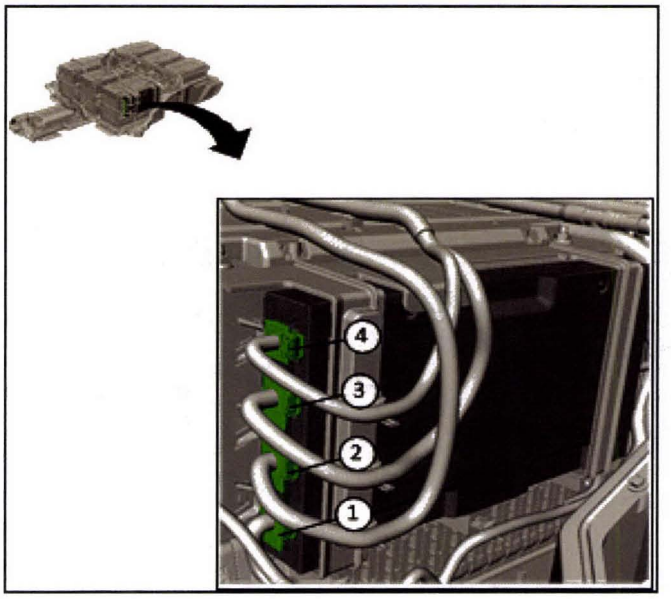

4072893

Note: Damage to the battery energy control module may occur if connector installation sequence to the module is not followed. Battery energy control module connector installation sequence is reverse of the removal sequence and must be performed after all sections have been reconnected.

Note: Damage to the battery energy control module may occur if connector sequence to the module is not followed.

9. Connect the battery energy control module connectors in the sequence shown to the battery energy control module.

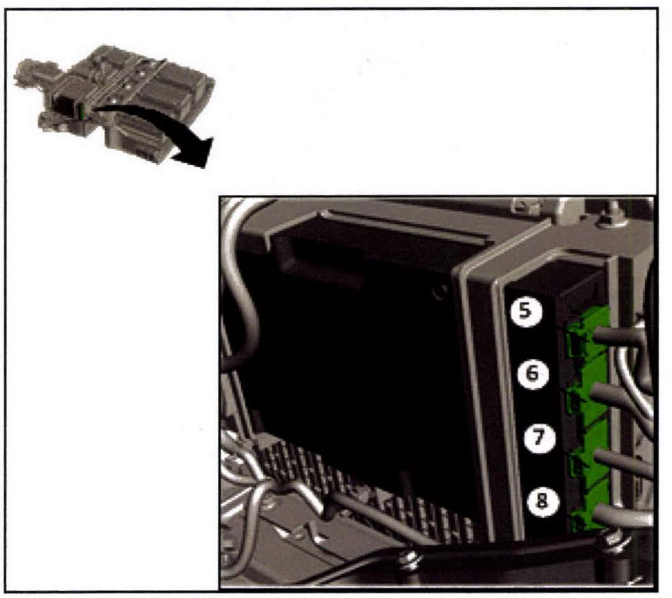

4072895

Note: Damage to the battery energy control module may occur if connector sequence to the module is not followed.

10. Connect the battery energy control module connectors in the sequence shown to the battery energy control module.
11. Install the cell battery cooling manifold inlet hose. Refer to *High Voltage Battery Cooling Manifold Inlet Hose Replacement (Coolant to all Battery Cells) on page 9-336* or *High Voltage Battery Cooling Manifold Inlet Hose Replacement (Individual Battery Cell Coolant Inlet Hose) on page 9-338*.
12. Install the cell battery cooling manifold outlet hose. Refer to *High Voltage Battery Cooling Manifold Outlet Hose Replacement (Coolant to all Battery Cells) on page 9-339* or *High Voltage Battery Cooling Manifold Outlet Hose Replacement (Individual Battery Cell Coolant Outlet Hose) on page 9-342*.
13. Perform the hybrid battery pack coolant passage leak test. Refer to *Hybrid Battery Pack Coolant Passage Leak Test on page 9-257*.
14. Perform the cell battery balancing if replaced. refer to *Hybrid/EV Battery Cell Balancing on page 9-541*.
15. Install the drive motor battery cover. Refer to *Drive Motor Battery Cover Replacement on page 9-449*.
16. Install the drive motor battery. Refer to *Drive Motor Battery Replacement and Shipping Preparation on page 9-524*.

Cell Battery Replacement (Battery Cell 6)

Removal Procedure

Danger: Always perform the High Voltage Disabling procedure prior to servicing any High Voltage component or connection. Personal Protection Equipment (PPE) and proper procedures must be followed.

The High Voltage Disabling procedure includes the following steps:

- ***Identify how to disable high voltage.***
- ***Identify how to test for the presence of high voltage.***
- ***Identify condition under which high voltage is always present and personal protection equipment (PPE) and proper procedures must be followed.***

Before working on any high voltage system, be sure to wear the following Personal Protection Equipment:

- ***Safety glasses with appropriate side shields when within 15 meters (50 feet) of the vehicle, either indoors or outdoors.***
- ***Certified and up-to-date Class "0" Insulation gloves rated at 1000V with leather protectors.***
  - ***Visually and functionally inspect the gloves before use.***
  - ***Wear the Insulation gloves with leather protectors at all times when working with the high voltage battery assembly, whether the system is energized or not.***

Failure to follow the procedures may result in serious injury or death.

1. Remove the drive motor battery. Refer to *Drive Motor Battery Replacement and Shipping Preparation on page 9-524*.
2. Remove the drive motor battery cover. Refer to *Drive Motor Battery Cover Replacement on page 9-449*.
3. Remove the cell battery cooling manifold outlet hose. Refer to *High Voltage Battery Cooling Manifold Outlet Hose Replacement (Coolant to all Battery Cells) on page 9-339* or *High Voltage Battery Cooling Manifold Outlet Hose Replacement (Individual Battery Cell Coolant Outlet Hose) on page 9-342*.
4. Remove the cell battery cooling manifold inlet hose. Refer to *High Voltage Battery Cooling Manifold Inlet Hose Replacement (Coolant to all Battery Cells) on page 9-336* or *High Voltage Battery Cooling Manifold Inlet Hose Replacement (Individual Battery Cell Coolant Inlet Hose) on page 9-338*.

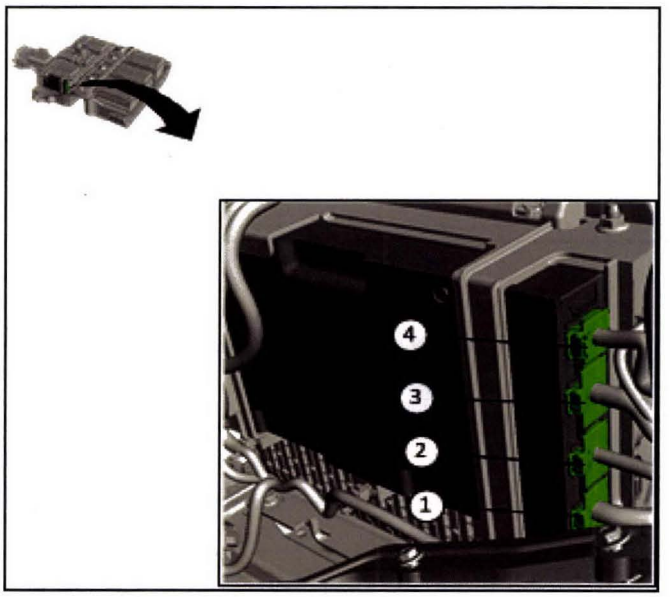

4072888

Note: Damage to the battery energy control module may occur if connector removal sequence to the module is not followed. Battery energy control module connector installation sequence is reverse of the removal sequence and must be performed after all sections have been reconnected.

5. Disconnect the battery energy control module connectors in the sequence shown.

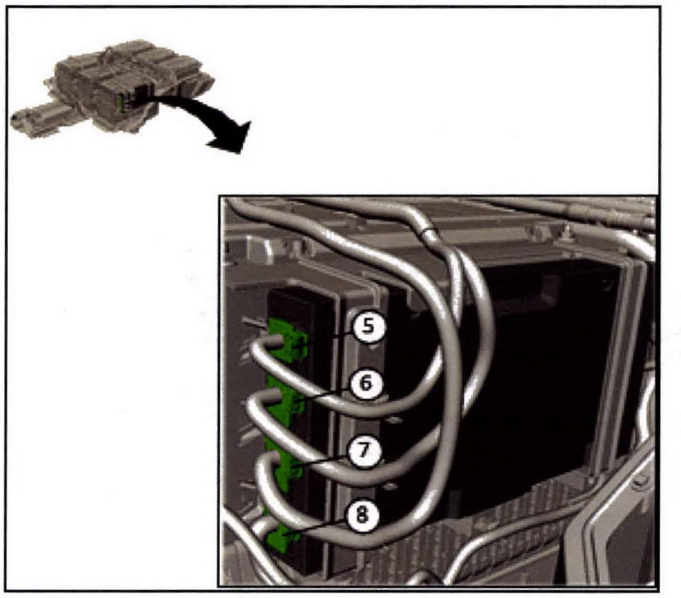

4072891

Note: Damage to the battery energy control module may occur if connector sequence to the module is not followed.

6. Disconnect the battery energy control module connectors in the sequence shown.
7. Remove the drive motor battery interface control module. Refer to *High Voltage Battery Interface Control Module Replacement on page 9-512*.

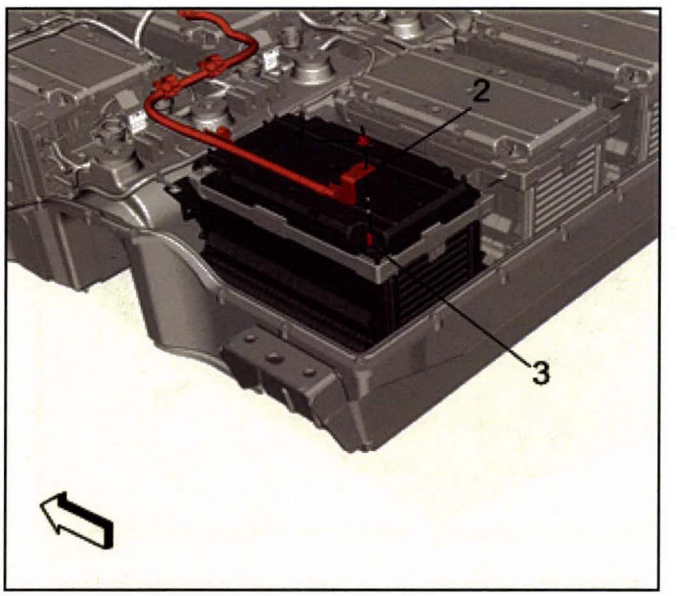

3719053

Note: Cover the battery cell stud (3) with protective tape that is UL® listed or insulation tape rated at a minimum of 600V.

8. Remove the fastener (1) and remove the high voltage battery disconnect cable terminal (2), from the battery cell 4 (3).

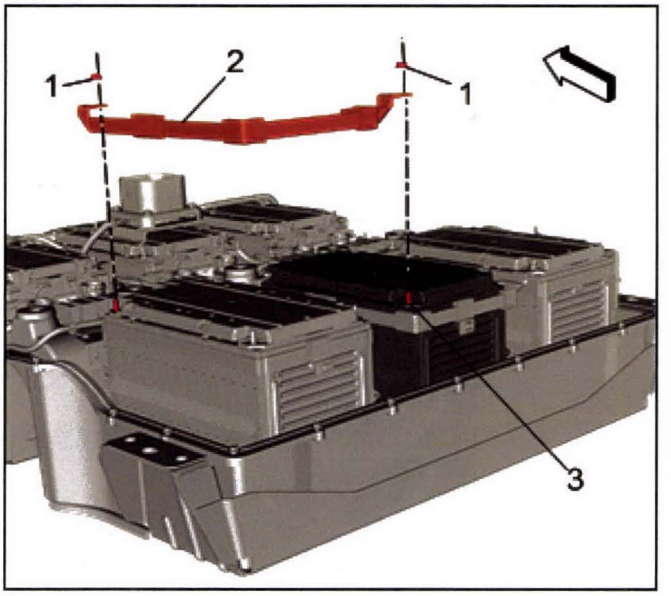

3722919

Note: Cover the battery cell studs with protective tape that is UL® listed or insulation tape rated at a minimum of 600V.

9. Remove the fasteners (1) and remove the high voltage cable (2) from battery cell 4 and battery cell 5 (3).

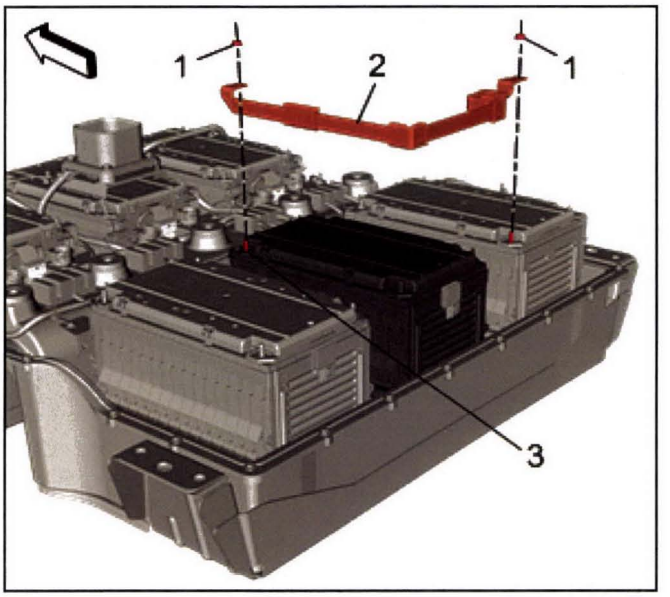

3722926

Note: Cover the battery cell studs with protective tape that is UL® listed or insulation tape rated at a minimum of 600V.

10. Remove the fasteners (1) and remove the high voltage cable (2) from battery cell 5 (3) and battery cell 6.

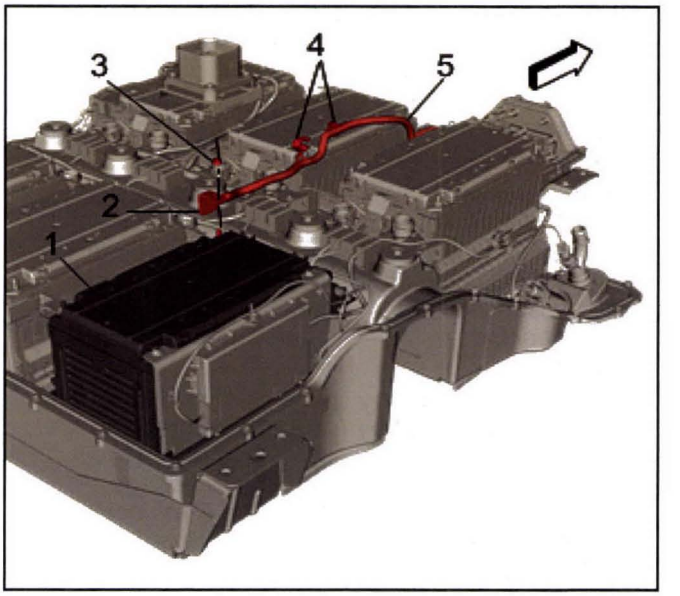

3716362

Note: Cover the battery cell stud with protective tape that is UL® listed or insulation tape rated at a minimum of 600V.

11. Remove the fastener (3) and remove the drive motor high voltage cable (2) from the battery cell 6 (1).

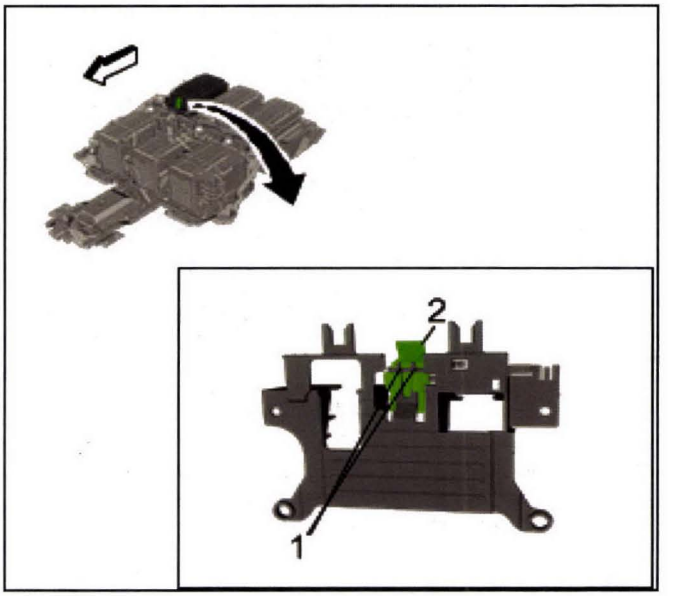

3723359

12. Depress the retaining tabs (1) and reposition the connector being careful not to tear the thin film harness (2).

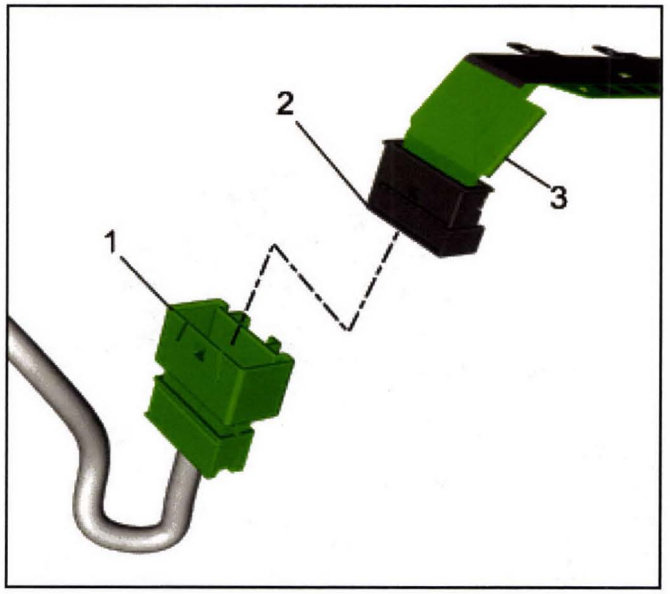

3715437

13. Disconnect the auxiliary battery wiring harness connector (1) from the battery cell 6 connector (2) being careful not to tear the thin film harness (3).

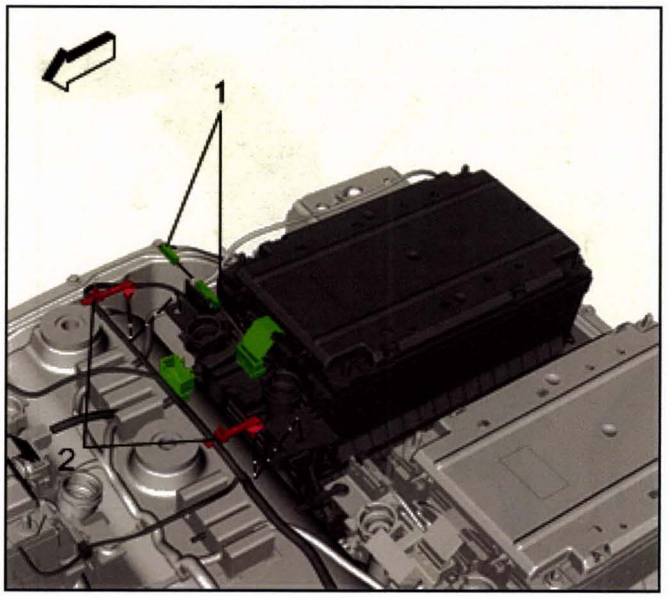

3723362

14. Disconnect the thermistor sensor connector (1) and detach the auxiliary battery wiring harness retainers (2) from the battery cell 6 bracket.

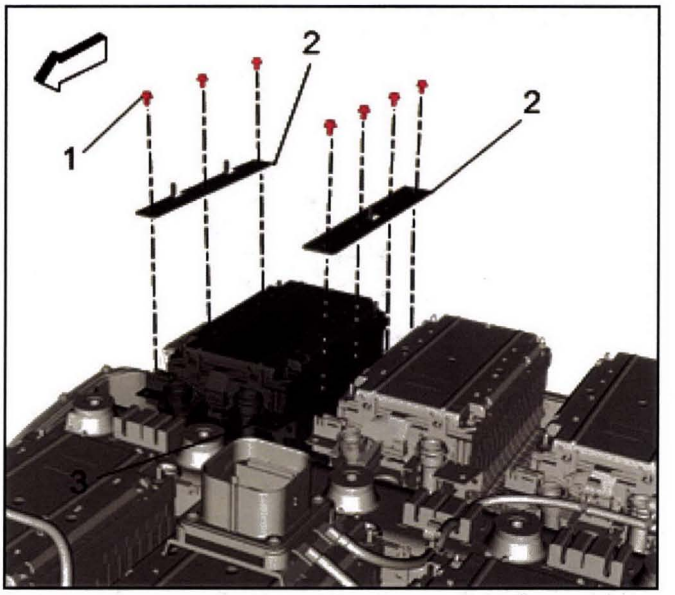

3723363

Note: Marked side of brackets face upwards when installing.

15. Remove the fasteners (1) and remove the battery hold down brackets (2) securing the battery cell 6 (3) to the tray.

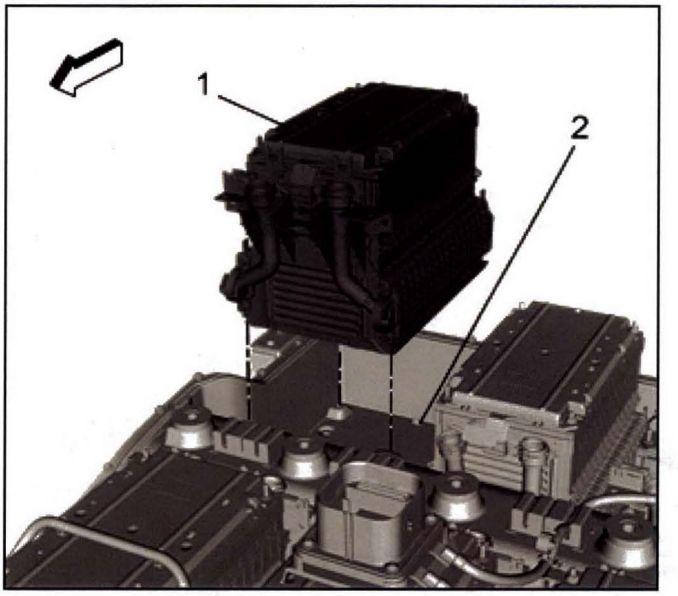

3723364

16. Remove the battery cell (1) from the drive motor battery assembly.

Installation Procedure

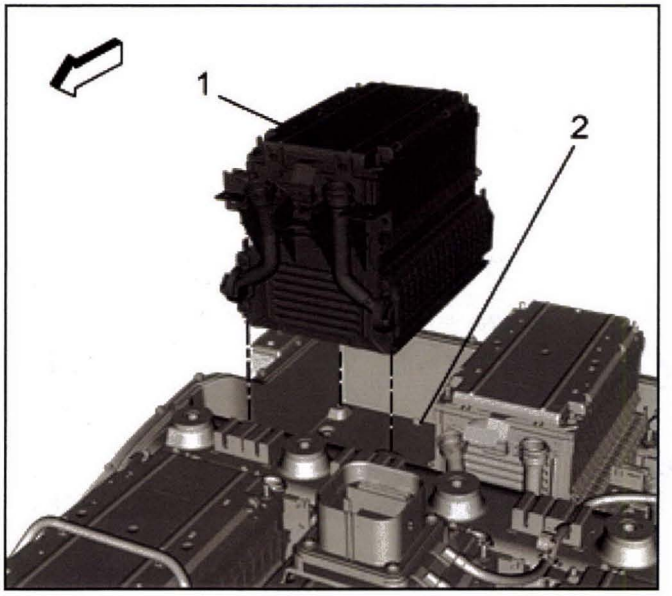

3723364

1. Install the battery cell (1) into the drive motor battery assembly with the front edge of the battery cell pushed up against the backstop tab (2).

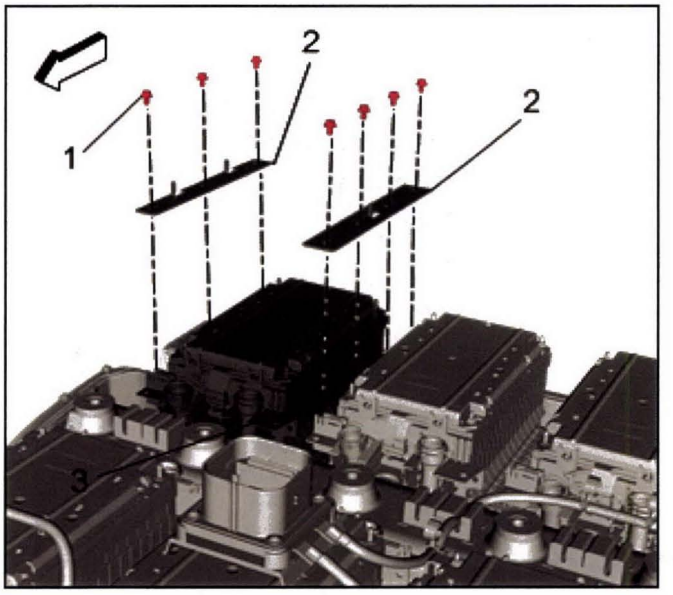

3723363

Caution: Refer to *Fastener Caution on page 0-8*.

2. Install the battery cell hold down brackets (2) with the marked up side facing up. Tighten the fasteners (1) to **9** N•m **(80 lb in)**.

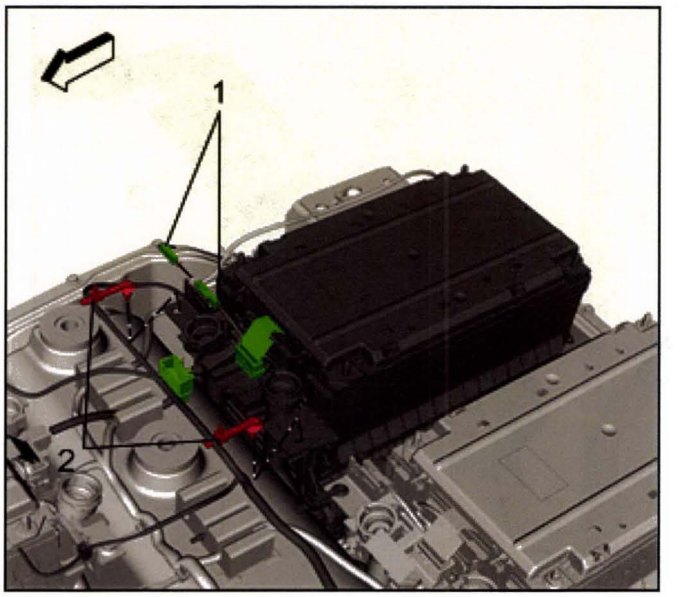

3723362

3. Connect the battery cell thermistor sensor connector (1) and install the auxiliary battery wiring harness retainers (2) to the battery cell bracket.

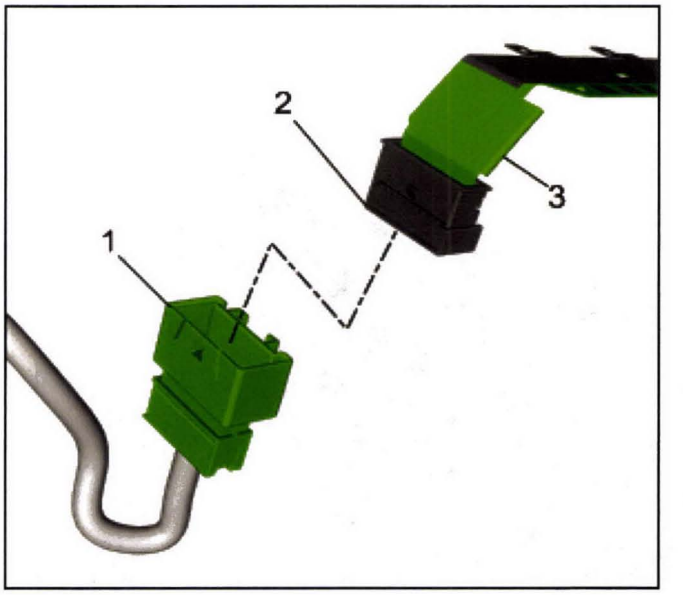

3715437

4. Connect the battery cell connector (2) to the auxiliary battery wiring harness connector (1) taking care not to tear the film harness (3).

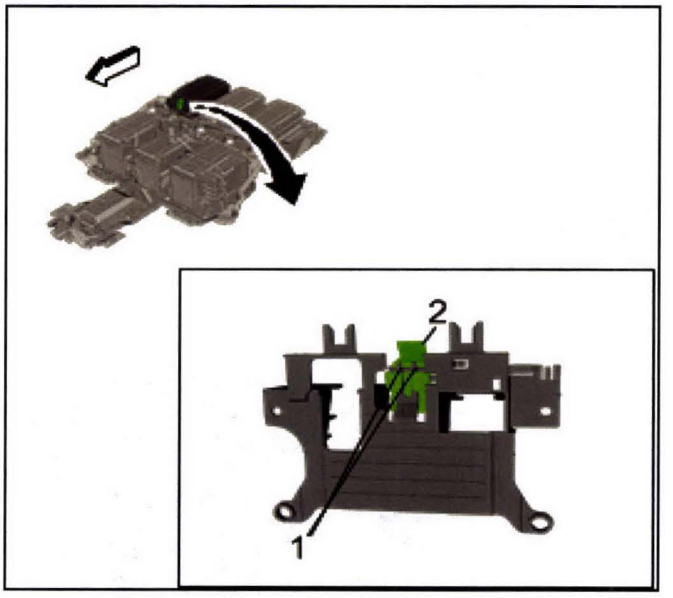

3723359

5. Install the battery cell connector onto the bracket retaining tabs (1).

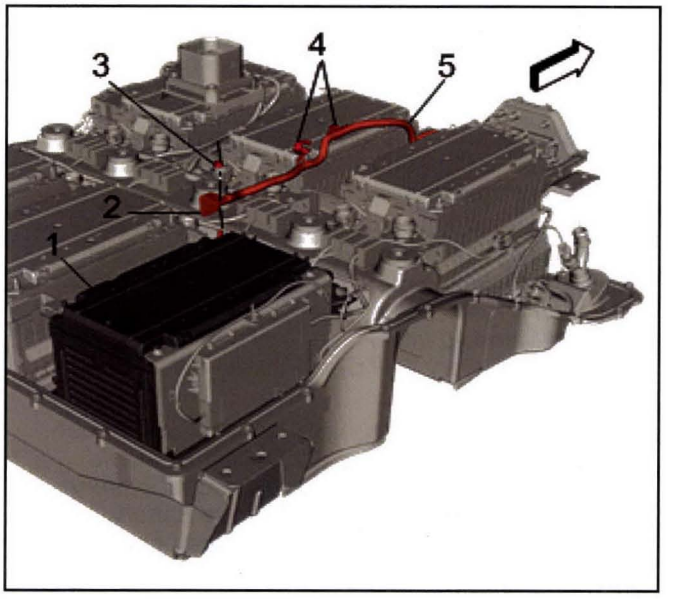

3716362

Note: Critical high voltage fastener. Perform second torque verification check following re-assembly.

6. Install the drive motor high voltage positive cable (2) to the battery cell 6 (1) stud. Tighten the fastener (3) to **9** N•m **(80 lb in)**.

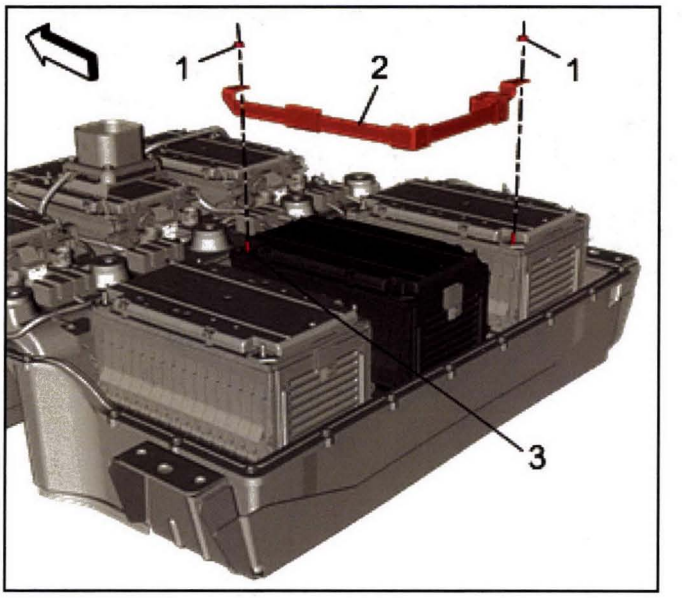

3722926

Note: Critical high voltage fastener. Perform second torque verification check following re-assembly.

7. Install the high voltage battery disconnect cable (2) to the battery cell 5 (3) and battery cell 6. Tighten the fasteners (1) to **9** N•m **(80 lb in)**.

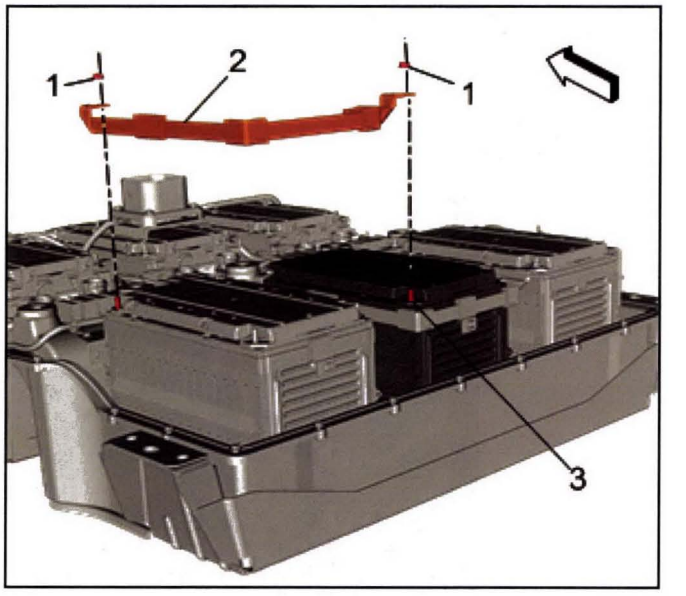

3722919

Note: Critical high voltage fastener. Perform second torque verification check following re-assembly.

8. Install the high voltage cable (2) to the battery cell 4 and battery cell 5 (3). Tighten the fasteners (1) to **9** N•m **(80 lb in)**.

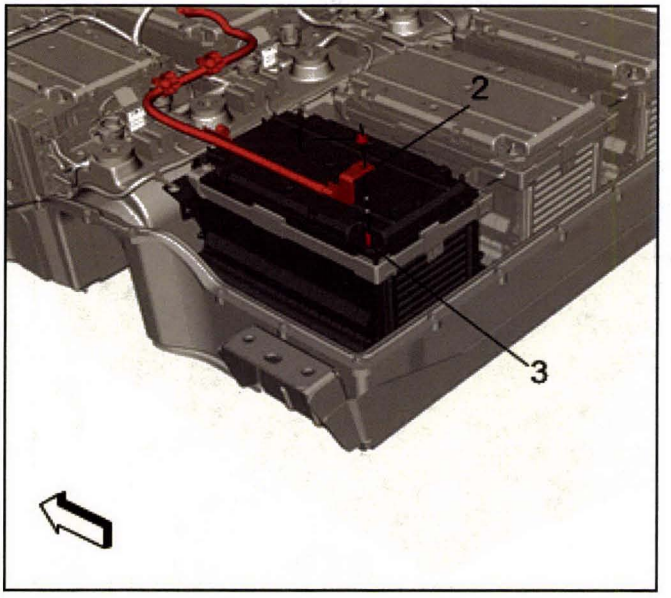

3719053

Note: Critical high voltage fastener. Perform second torque verification check following re-assembly.

9. Install the high voltage cable (2) to battery cell 4 (3). Tighten the fastener (1) to **9 N•m (80 lb in)**.
10. Install the drive motor battery interface control module. Refer to *High Voltage Battery Interface Control Module Replacement on page 9-512*.

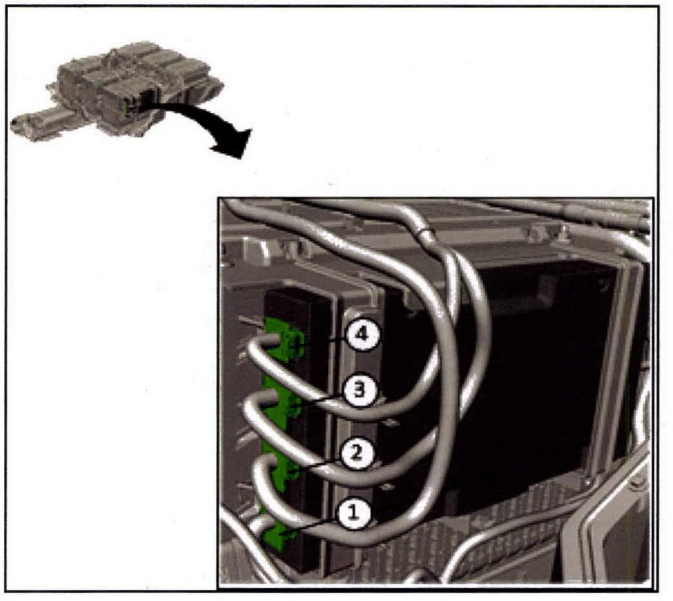

4072893

Note: Damage to the battery energy control module may occur if connector installation sequence to the module is not followed. Battery energy control module connector installation sequence is reverse of the removal sequence and must be performed after all sections have been reconnected.

Note: Damage to the battery energy control module may occur if connector sequence to the module is not followed.

11. Connect the battery energy control module connectors in the sequence shown to the battery energy control module.

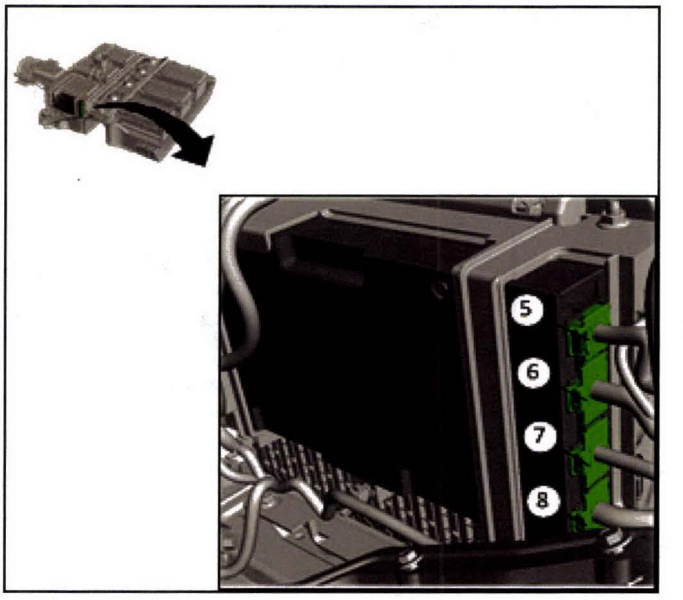

4072895

Note: Damage to the battery energy control module may occur if connector sequence to the module is not followed.

12. Connect the battery energy control module connectors in the sequence shown to the battery energy control module.
13. Install the cell battery cooling manifold inlet hose. Refer to *High Voltage Battery Cooling Manifold Inlet Hose Replacement (Coolant to all Battery Cells) on page 9-336* or *High Voltage Battery Cooling Manifold Inlet Hose Replacement (Individual Battery Cell Coolant Inlet Hose) on page 9-338*.
14. Install the cell battery cooling manifold outlet hose. Refer to *High Voltage Battery Cooling Manifold Outlet Hose Replacement (Coolant to all Battery Cells) on page 9-339* or *High Voltage Battery Cooling Manifold Outlet Hose Replacement (Individual Battery Cell Coolant Outlet Hose) on page 9-342*.
15. Perform the hybrid battery pack coolant passage leak test. Refer to *Hybrid Battery Pack Coolant Passage Leak Test on page 9-257*.
16. Perform the cell battery balancing if replaced. refer to *Hybrid/EV Battery Cell Balancing on page 9-541*.
17. Install the drive motor battery cover. Refer to *Drive Motor Battery Cover Replacement on page 9-449*.
18. Install the drive motor battery. Refer to *Drive Motor Battery Replacement and Shipping Preparation on page 9-524*.

Drive Motor Battery Current Sensor Replacement

Removal Procedure

Danger: Always perform the High Voltage Disabling procedure prior to servicing any High Voltage component or connection. Personal Protection Equipment (PPE) and proper procedures must be followed.

The High Voltage Disabling procedure includes the following steps:

- ***Identify how to disable high voltage.***
- ***Identify how to test for the presence of high voltage.***
- ***Identify condition under which high voltage is always present and personal protection equipment (PPE) and proper procedures must be followed.***

Before working on any high voltage system, be sure to wear the following Personal Protection Equipment:

- ***Safety glasses with appropriate side shields when within 15 meters (50 feet) of the vehicle, either indoors or outdoors.***
- ***Certified and up-to-date Class "0" Insulation gloves rated at 1000V with leather protectors.***
  - ***Visually and functionally inspect the gloves before use.***
  - ***Wear the Insulation gloves with leather protectors at all times when working with the high voltage battery assembly, whether the system is energized or not.***

Failure to follow the procedures may result in serious injury or death.

1. Remove the drive motor battery. Refer to *Drive Motor Battery Replacement and Shipping Preparation on page 9-524*.
2. Remove the drive motor battery cover. Refer to *Drive Motor Battery Cover Replacement on page 9-449*.

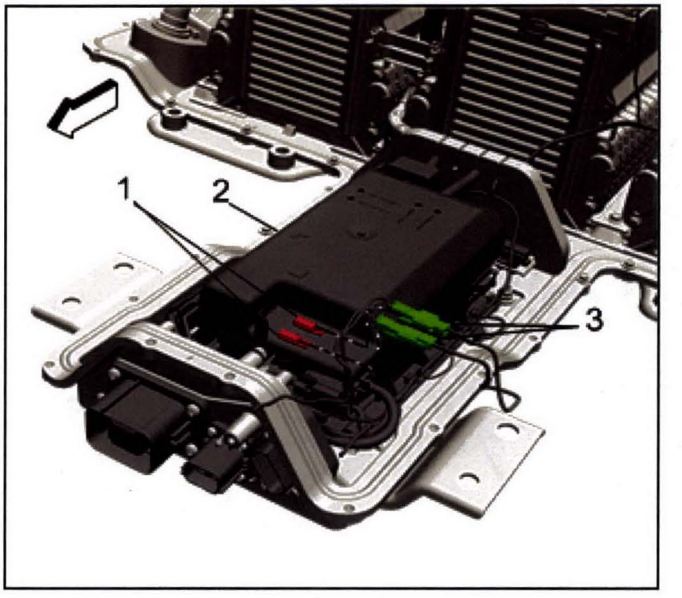

3707863

3. Unclip the connectors (3), from the retainer clips (1), on top of the drive motor battery high voltage contactor cover (2).

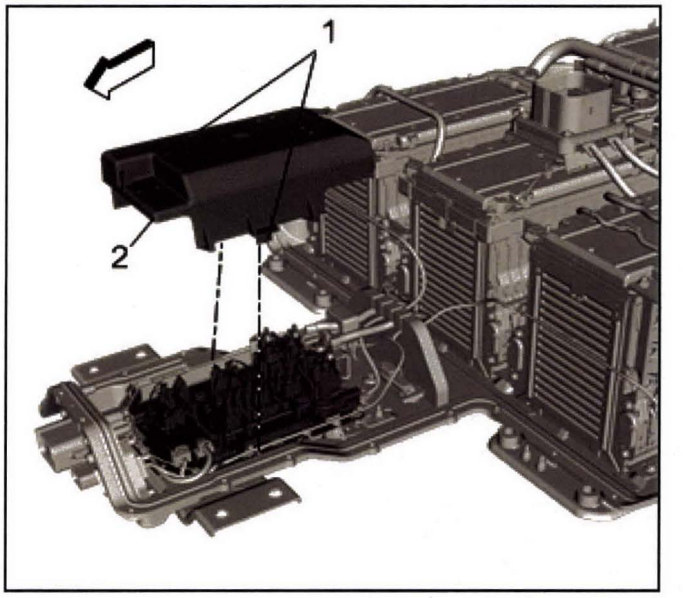

3707867

4. Using an appropriate tool, release the retaining tabs (1) and remove the drive motor battery high voltage contactor cover (2).

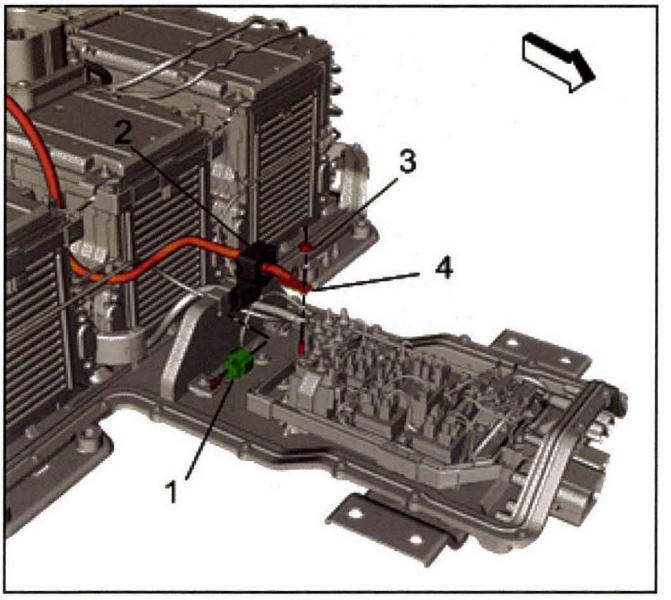

3714156

5. Disconnect the drive motor battery current sensor connector (1).
6. Remove the fastener (3) and remove the high voltage negative cable terminal (4), from the drive motor battery high voltage contactor assembly.

   Note: Cover the high voltage battery negative cable terminal (4) with protective tape.
7. Remove the drive motor battery current sensor (2) from the high voltage negative cable.

Installation Procedure

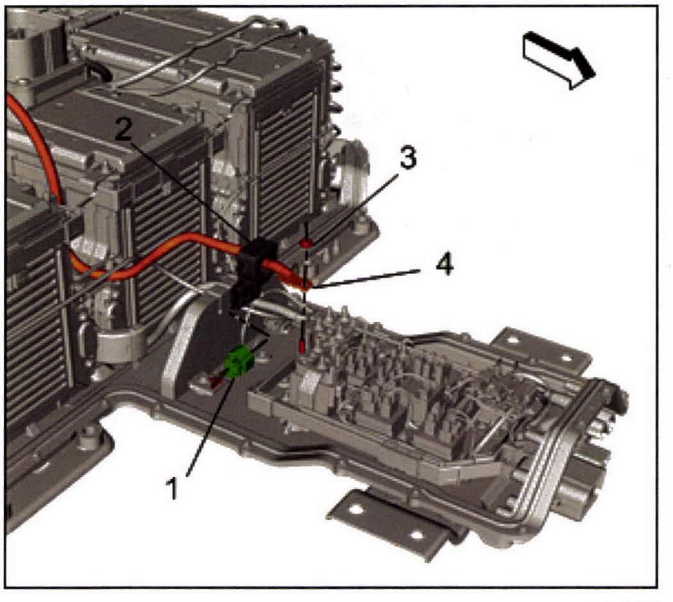

3714156

1. Install the drive motor battery current sensor (2) onto the high voltage negative cable (4).

Caution: Refer to *Fastener Caution on page 0-8*.

Note: Critical high voltage fastener. Perform second torque verification check following re-assembly.

2. Install the high voltage negative cable terminal (4) onto the high voltage contactor stud and tighten the fastener (3) to **9 N•m (80 lb in)**.
3. Connect the connector (1) to the drive motor battery current sensor (2).

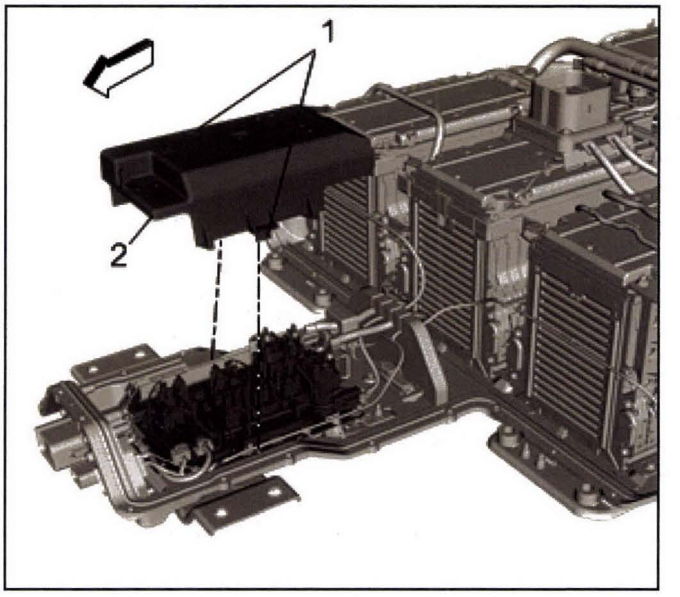

3707867

4. Install the drive motor battery high voltage contactor cover (2) with the retaining tabs (1).

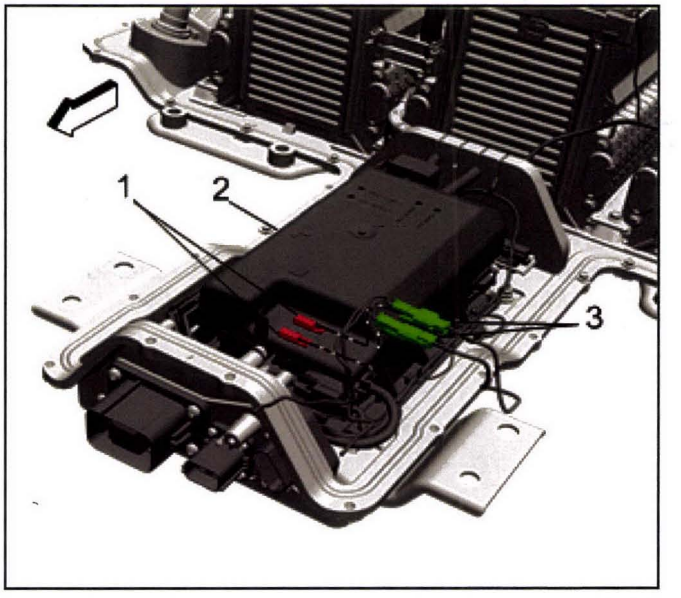

3707863

5. Install the connectors (3) into the retainer clips (1) on the drive motor battery high voltage contactor cover (2).
6. Install the drive motor battery cover. Refer to *Drive Motor Battery Cover Replacement on page 9-449*.
7. Install the drive motor battery. Refer to *Drive Motor Battery Replacement and Shipping Preparation on page 9-524*.

Drive Motor Battery Positive High Voltage Contactor Relay Replacement

Removal Procedure

Danger: Always perform the High Voltage Disabling procedure prior to servicing any High Voltage component or connection. Personal Protection Equipment (PPE) and proper procedures must be followed.

The High Voltage Disabling procedure includes the following steps:

- ***Identify how to disable high voltage.***
- ***Identify how to test for the presence of high voltage.***
- ***Identify condition under which high voltage is always present and personal protection equipment (PPE) and proper procedures must be followed.***

Before working on any high voltage system, be sure to wear the following Personal Protection Equipment:

- ***Safety glasses with appropriate side shields when within 15 meters (50 feet) of the vehicle, either indoors or outdoors.***
- ***Certified and up-to-date Class "0" Insulation gloves rated at 1000V with leather protectors.***
  - ***Visually and functionally inspect the gloves before use.***
  - ***Wear the Insulation gloves with leather protectors at all times when working with the high voltage battery assembly, whether the system is energized or not.***

Failure to follow the procedures may result in serious injury or death.

1. Remove the drive motor battery. Refer to *Drive Motor Battery Replacement and Shipping Preparation on page 9-524*.
2. Remove the drive motor battery cover. Refer to *Drive Motor Battery Cover Replacement on page 9-449*.

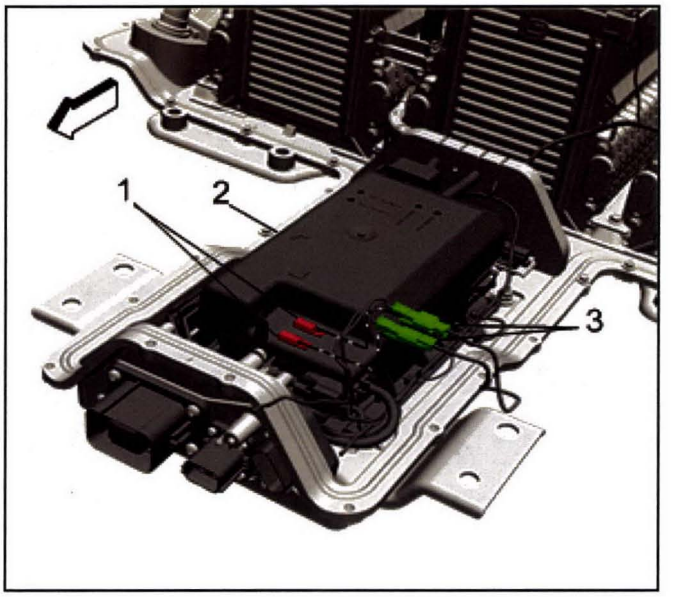

3707863

3. Unclip the connectors (3), from the retainer clips (1), on top of the drive motor battery high voltage contactor cover (2).

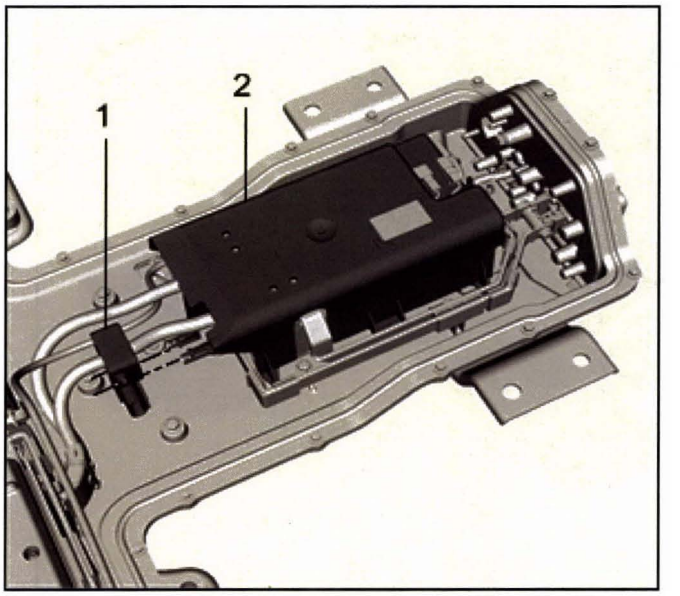

3796348

4. Detach the current sensor (1) from the drive motor battery high voltage contactor cover.

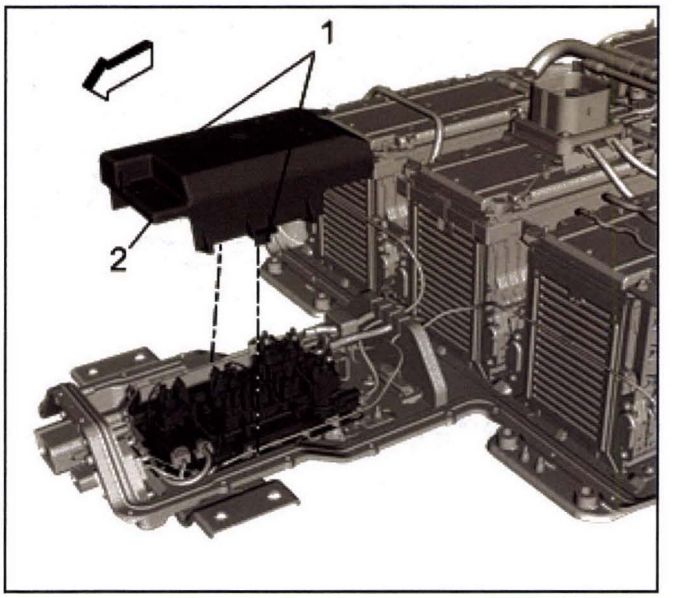

3707867

5. Using an appropriate tool, release the retaining tabs (1) and remove the drive motor battery high voltage contactor cover (2).

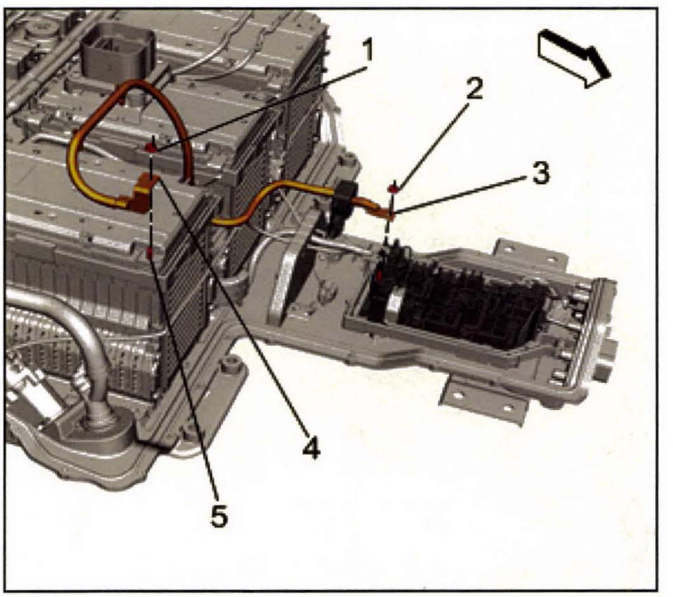

3707869

Note: Cover the battery cell stud (5) with protective tape that is UL® listed, or insulation tape rated at a minimum of 600V.

6. Remove the fastener (1) and remove the high voltage negative cable terminal (4) from the battery cell 1 stud (5).
7. Remove the fastener (2) and remove the high voltage negative cable terminal (3), from the drive motor battery high voltage contactor stud.

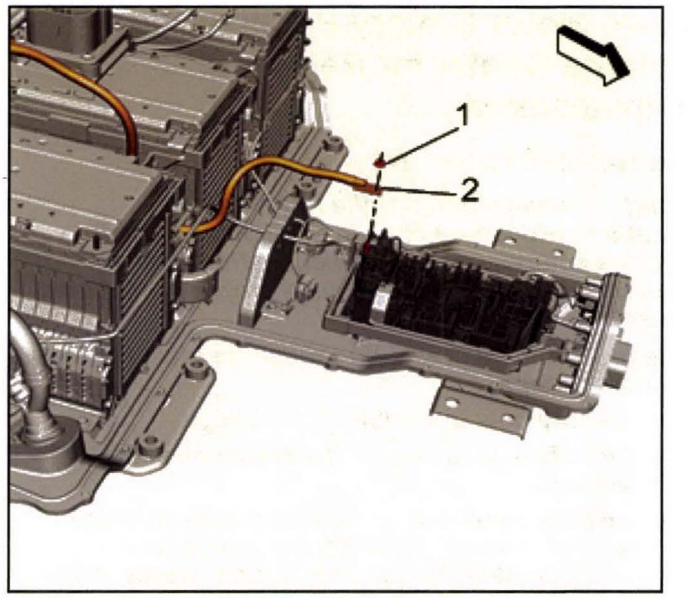

3707872

Note: Cover the high voltage cable terminal (2) with protective tape that is UL® listed, or insulation tape rated at a minimum of 600V.

8. Remove the fastener (1) and remove the high voltage positive cable terminal (2) from the drive motor battery high voltage contactor stud.

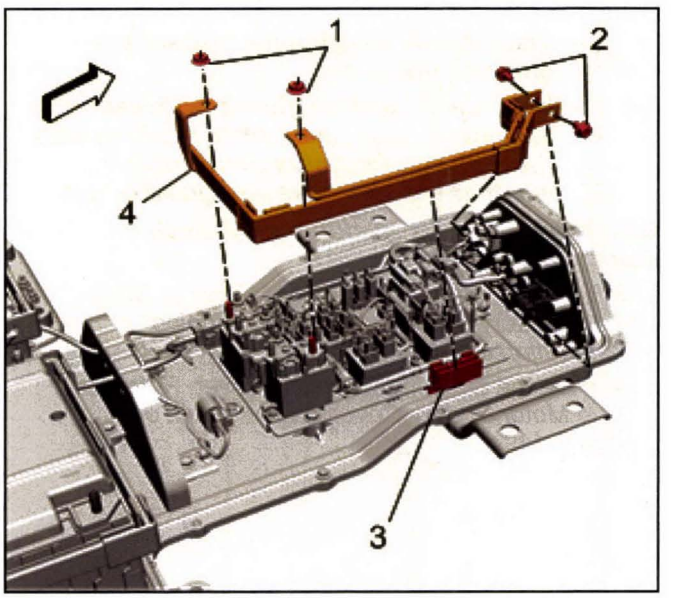

3707875

9. Remove the fasteners (1, 2) securing the bus bar (4) to the drive motor battery high voltage contactor and the X1 connector.
10. Remove the bus bar (4) from the retaining clip (3).

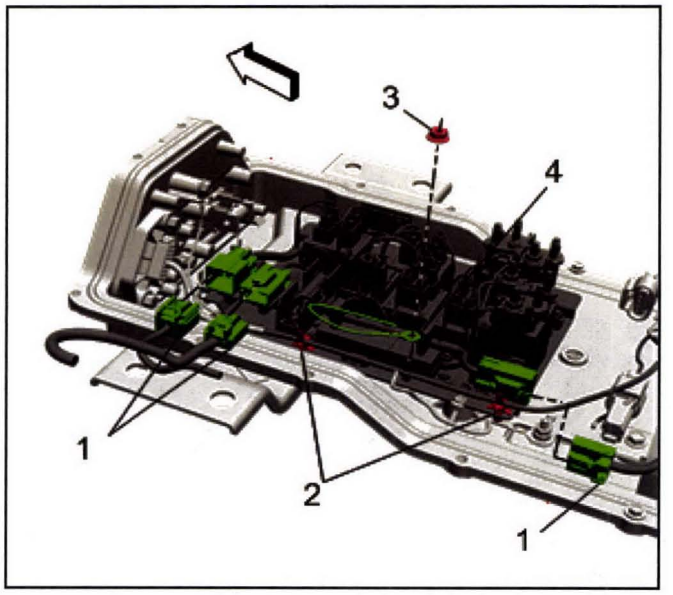

3707878

11. Remove the fastener (3) and the ground terminal (4) from the drive motor battery high voltage contactor stud.
12. Disconnect the connectors (1) and detach the harness retainers (2) from the drive motor battery high voltage contactor.

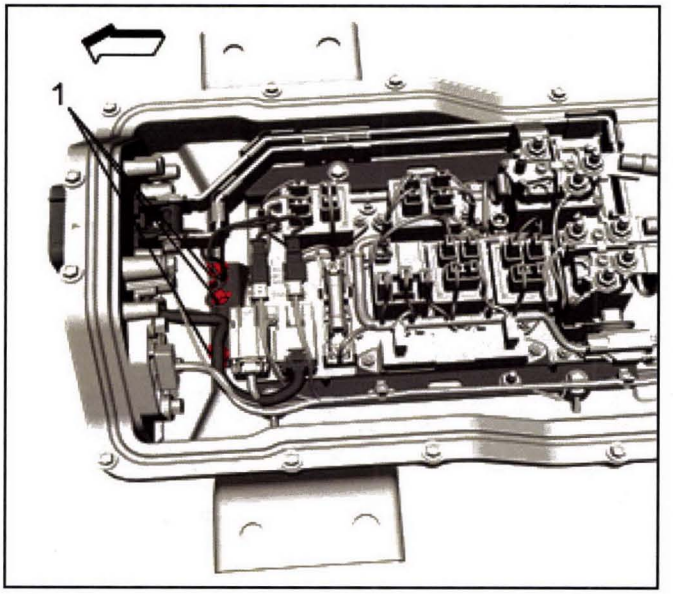

3946724

13. Detach the harness retainers (1) from the drive motor high voltage contactor base plate.

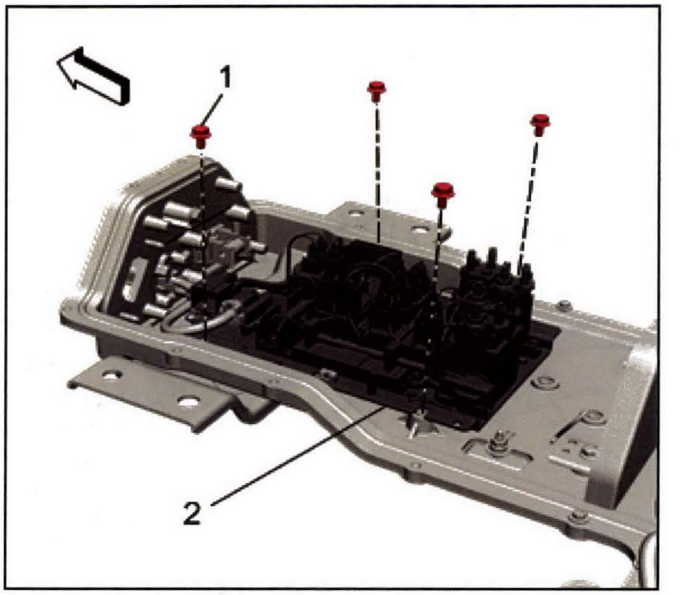

3707881

14. Remove the fasteners (1) and remove the drive motor battery high voltage contactor (2) from the battery tray.

Installation Procedure

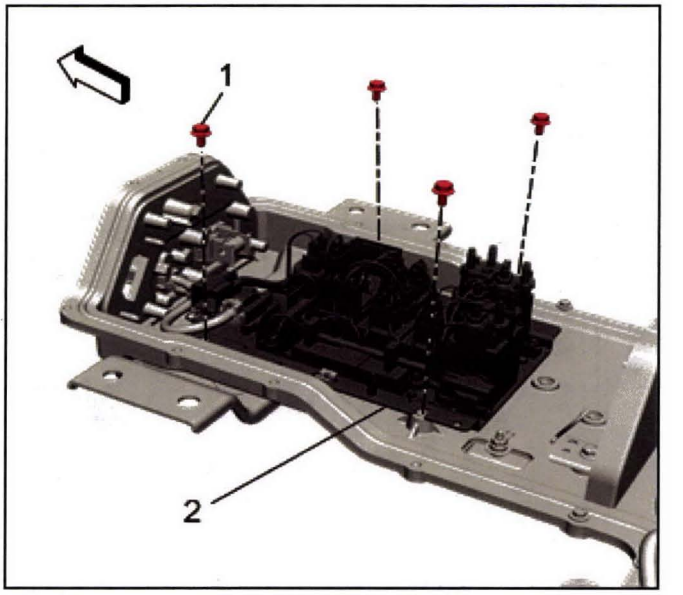

3707881

Caution: Refer to *Fastener Caution on page 0-8*.

1. Install the drive motor battery high voltage contactor (2) and tighten the fasteners (1) to **9** N•m **(80 lb in)**.

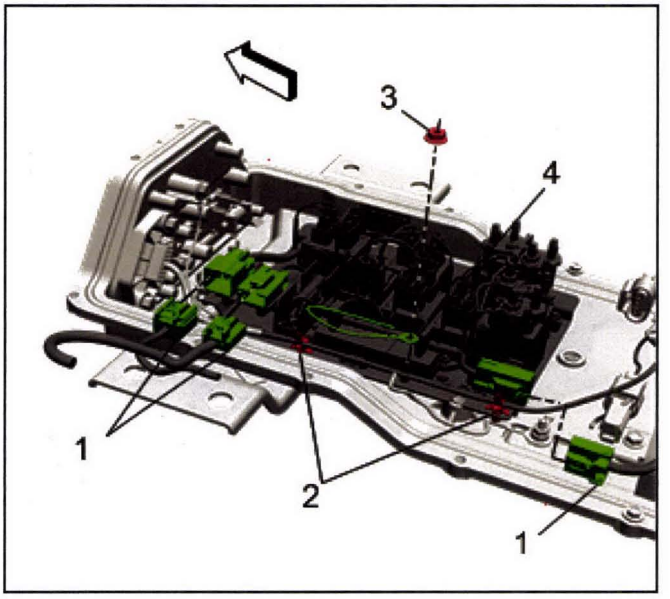

3707878

Note: Critical high voltage fastener. Perform second torque verification check following re-assembly.

2. Install the harness retainers (2) and the ground terminal (4) to the stud. Tighten the fastener (3) to **9** N•m **(80 lb in)**.
3. Install the connectors (1) to the drive motor battery high voltage contactor.

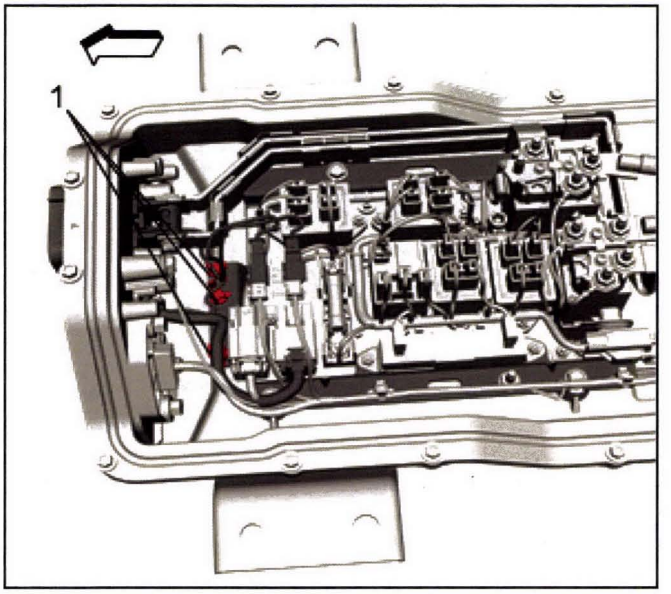

3946724

4. Attach the harness retainers (1) to the drive motor high voltage contactor base plate.

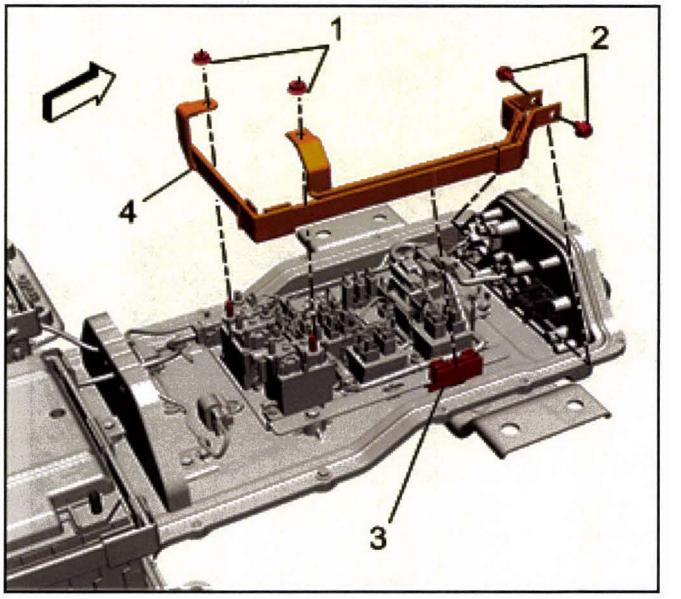

3707875

5. Install the bus bar (4) into the retainer clip (3).
   Note: Critical high voltage fastener. Perform second torque verification check following re-assembly.
6. Tighten the fasteners (2) to **9** N•m **(80 lb in)**.
   Note: Critical high voltage fastener. Perform second torque verification check following re-assembly.
7. Tighten the fasteners (1) to **9** N•m **(80 lb in)**.

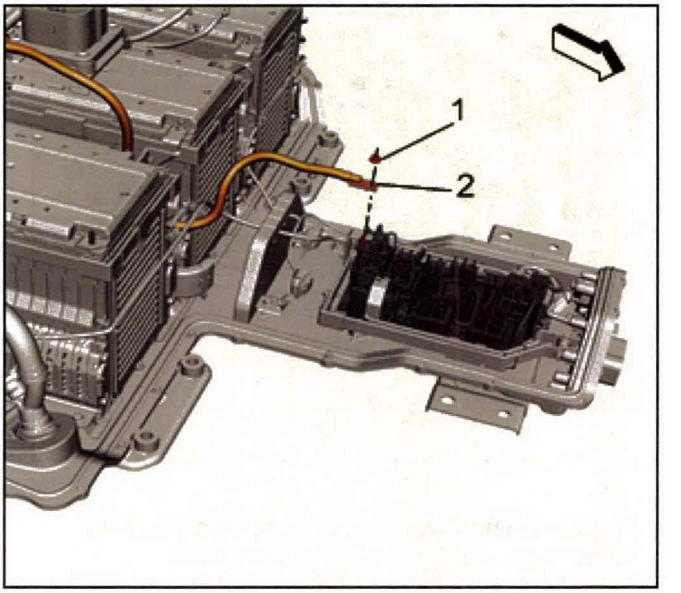

3707872

Note: Critical high voltage fastener. Perform second torque verification check following re-assembly.

8. Install the high voltage positive cable (2) to the contactor stud and tighten the fastener (1) to **9** N•m **(80 lb in)**.

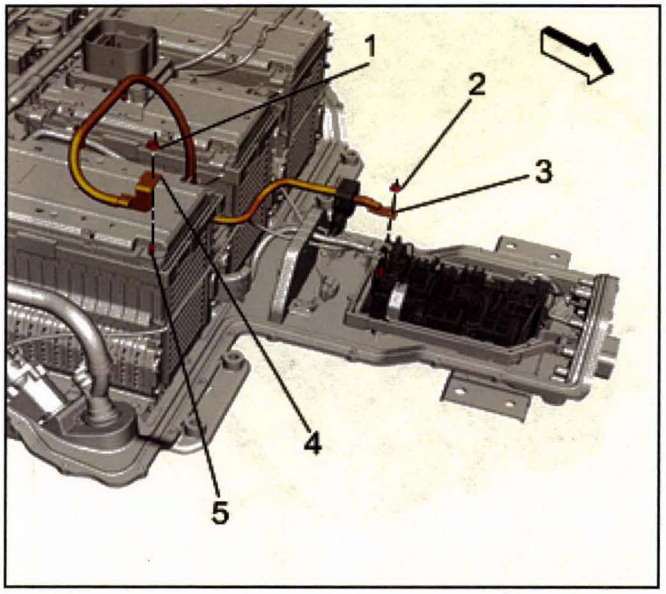

3707869

Note: Critical high voltage fastener. Perform second torque verification check following re-assembly.

9. Install the high voltage negative cable (3) to the contactor stud and tighten the fastener (2) to **9** N•m **(80 lb in)**.

   Note: Critical high voltage fastener. Perform second torque verification check following re-assembly.

10. Install the high voltage negative cable (4) to the battery cell stud (5) and tighten the fastener (1) to **9** N•m **(80 lb in)**.
11. Position all cables and wires in the foam cell battery module seal.

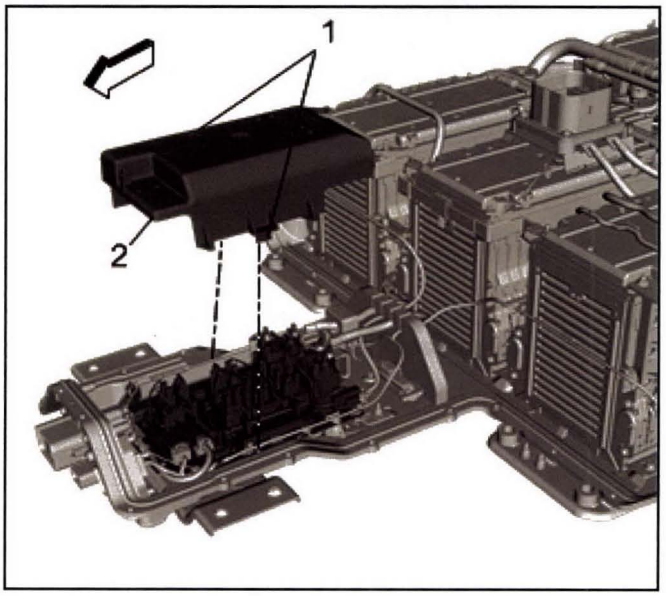

3707867

12. Install the drive motor battery high voltage contactor cover (2) with the retaining tabs (1).

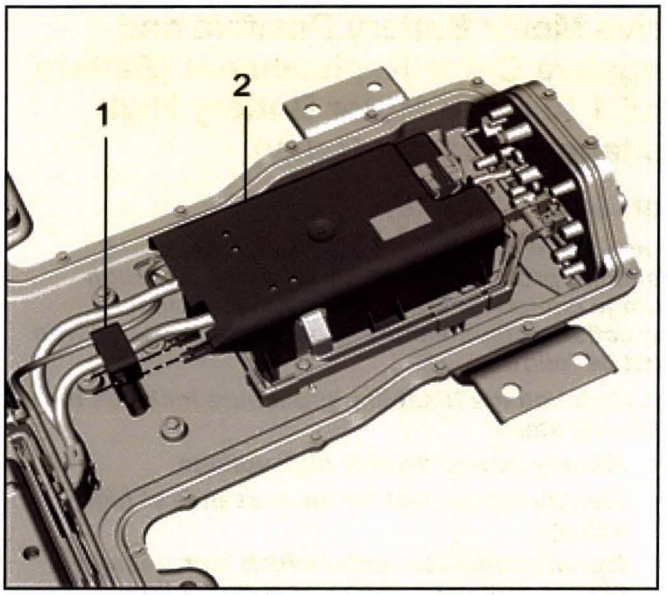

3796348

13. Attach the current sensor (1) to the drive motor battery high voltage contactor cover (2).

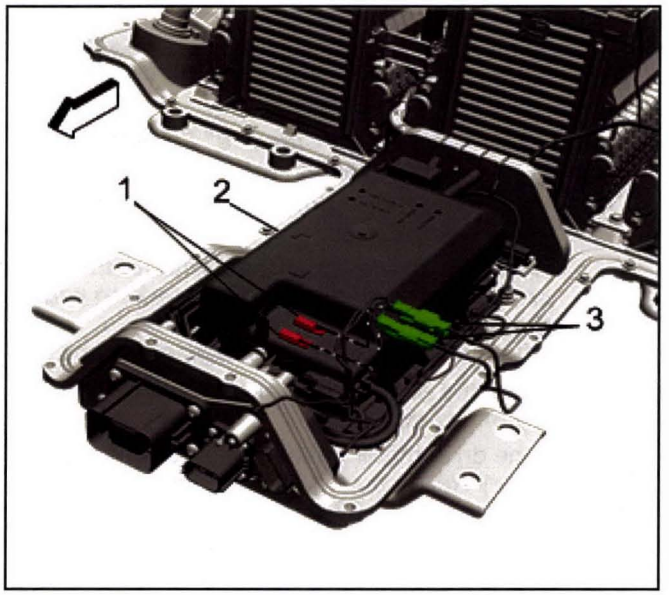

3707863

14. Install the connectors (3) into the retainer clips (1) on the drive motor battery high voltage contactor cover (2).
15. Install the drive motor battery cover. Refer to *Drive Motor Battery Cover Replacement on page 9-449*.
16. Install the drive motor battery. Refer to *Drive Motor Battery Replacement and Shipping Preparation on page 9-524*.

Drive Motor Battery Positive and Negative Cable Replacement (Battery Cell 1 to Drive Motor Battery High Voltage Contactor Relay)

Removal Procedure

Danger: Always perform the High Voltage Disabling procedure prior to servicing any High Voltage component or connection. Personal Protection Equipment (PPE) and proper procedures must be followed.

The High Voltage Disabling procedure includes the following steps:

- ***Identify how to disable high voltage.***
- ***Identify how to test for the presence of high voltage.***
- ***Identify condition under which high voltage is always present and personal protection equipment (PPE) and proper procedures must be followed.***

Before working on any high voltage system, be sure to wear the following Personal Protection Equipment:

- ***Safety glasses with appropriate side shields when within 15 meters (50 feet) of the vehicle, either indoors or outdoors.***
- ***Certified and up-to-date Class "0" Insulation gloves rated at 1000V with leather protectors.***
  - ***Visually and functionally inspect the gloves before use.***
  - ***Wear the Insulation gloves with leather protectors at all times when working with the high voltage battery assembly, whether the system is energized or not.***

Failure to follow the procedures may result in serious injury or death.

1. Remove the drive motor battery. Refer to *Drive Motor Battery Replacement and Shipping Preparation on page 9-524*.
2. Remove the drive motor battery cover. Refer to *Drive Motor Battery Cover Replacement on page 9-449*.

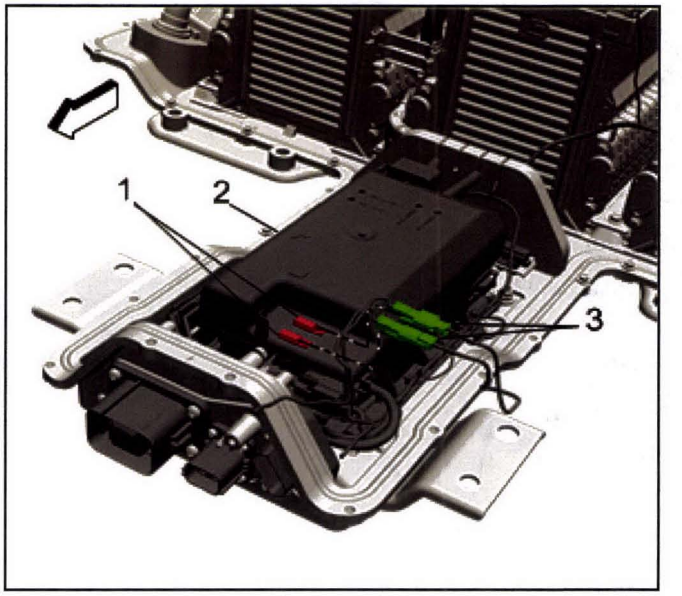

3707863

3. Unclip the connectors (3), from the retainer clips (1), on top of the drive motor battery high voltage contactor cover (2).

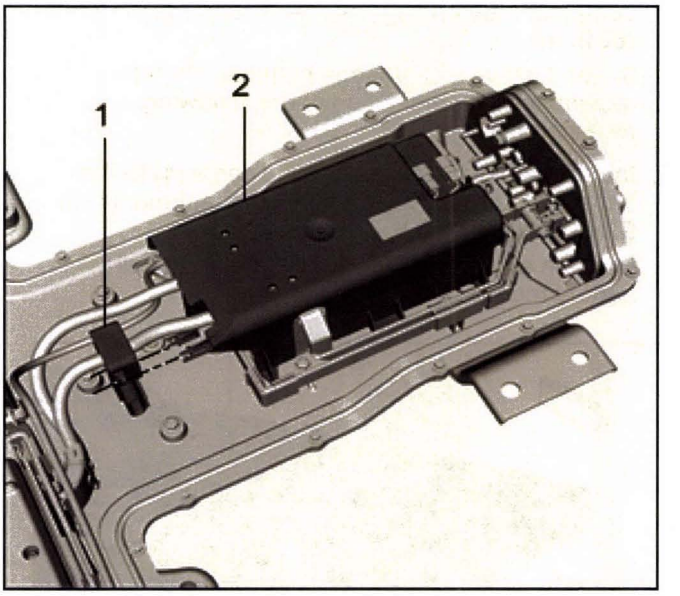

3796348

4. Detach the current sensor (1) from the drive motor high voltage contactor cover (2).

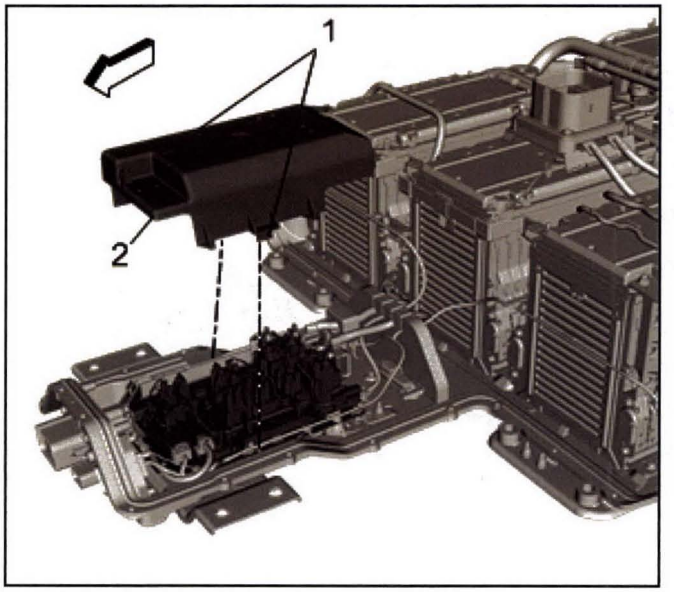

3707867

5. Using an appropriate tool, release the retaining tabs (1) and remove the drive motor battery high voltage contactor cover (2).

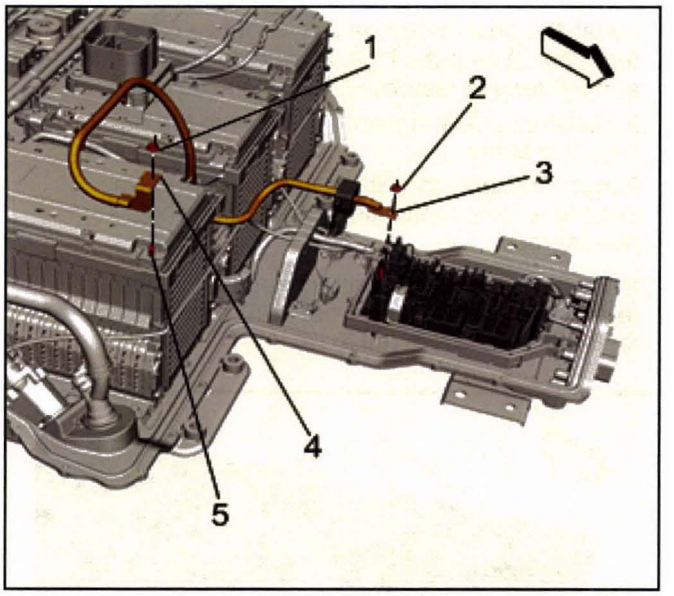

3707869

Note: Cover the battery cell stud (5) with protective tape that is UL® listed, or insulation tape rated at a minimum of 600V.

6. Remove the fastener (1) and remove the drive motor battery negative cable terminal (4), from the battery cell 1 (5).
7. Remove the fastener (2) and remove the drive motor battery negative cable terminal (3), from the drive motor battery high voltage contactor stud.

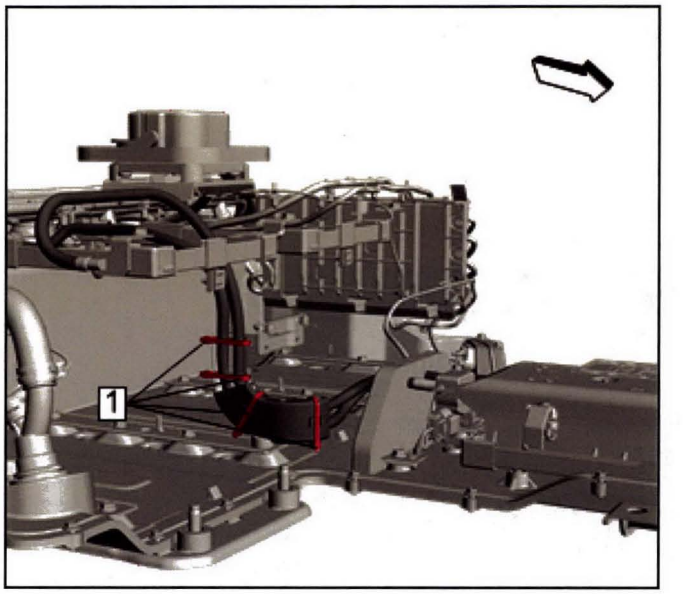

4092521

Note: Make note of the position of the cable ties.

8. Remove the cable ties (1) securing the cables and cable shield halves.

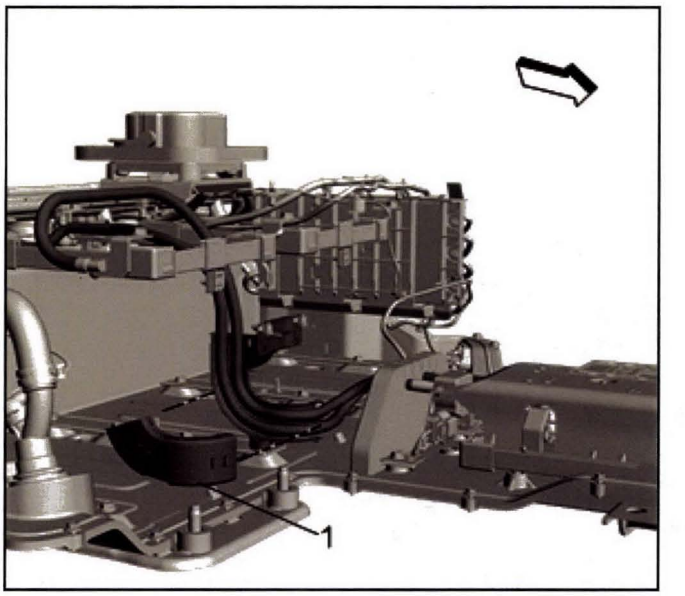

4092527

9. Remove the outer cable shield half (1).
10. Remove the drive motor battery cable.

Installation Procedure

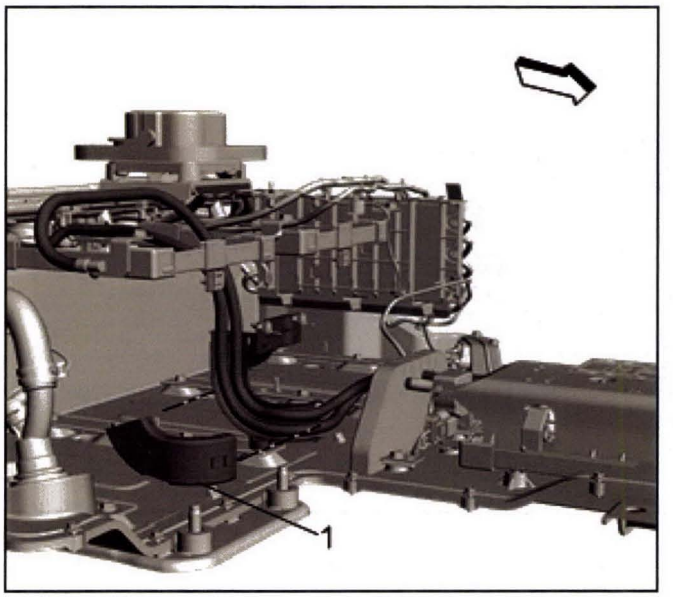

4092527

1. Position the drive motor battery cable to the cable shield.
2. Install the outer cable shield half (1).

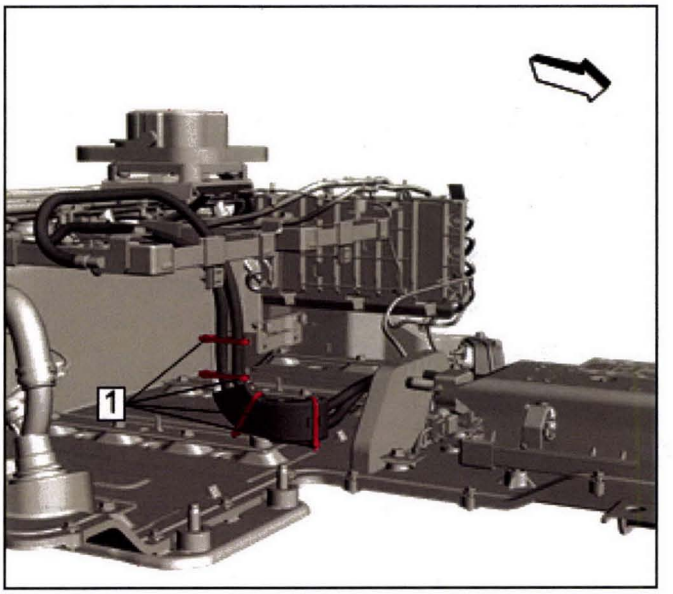

4092521

3. Install the cable ties (1) to secure the cables and the cable shield halves.

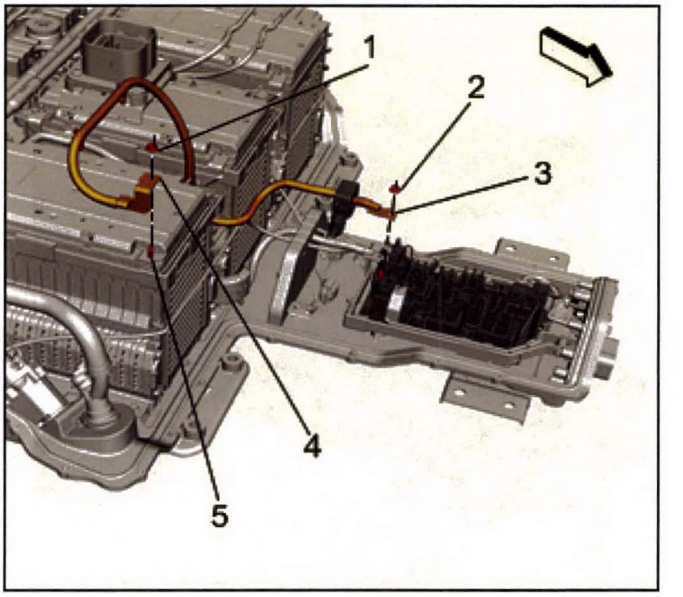

3707869

Caution: Refer to *Fastener Caution on page 0-8*.

Note: Critical high voltage fastener. Perform second torque verification check following re-assembly.

4. Install the drive motor battery negative cable terminal (3) onto the high voltage contactor stud and tighten the fastener (2) to **9** N•m **(80 lb in)**.
5. Install the battery current sensor onto the battery negative cable.

   Note: Critical high voltage fastener. Perform second torque verification check following re-assembly.
6. Install the drive motor battery negative cable terminal (4) to the battery cell 1 (5) and tighten the fastener (1) to **9** N•m **(80 lb in)**.

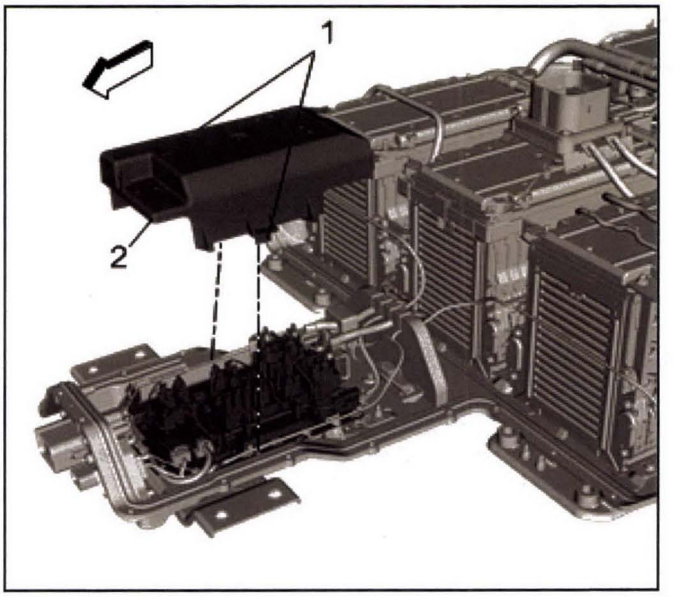

3707867

7. Install the drive motor battery high voltage contactor cover (2) with the retaining tabs (1).

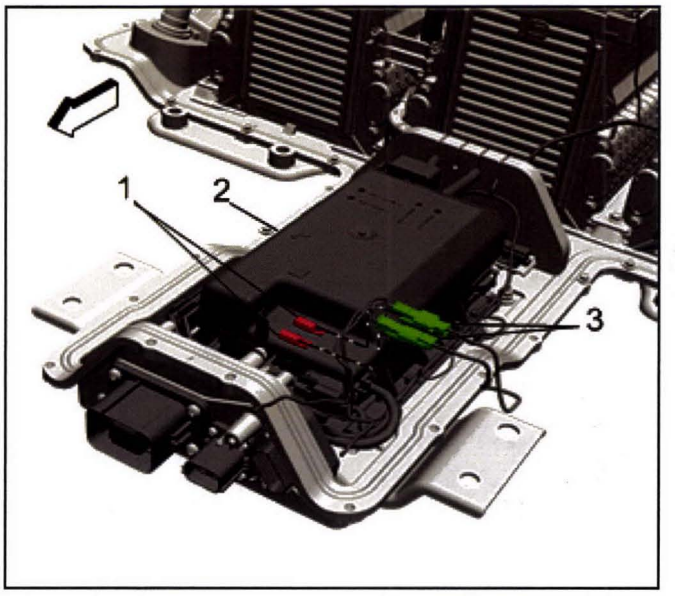

3707863

8. Install the connectors (3) into the retainer clips (1) on the drive motor battery high voltage contactor cover (2).

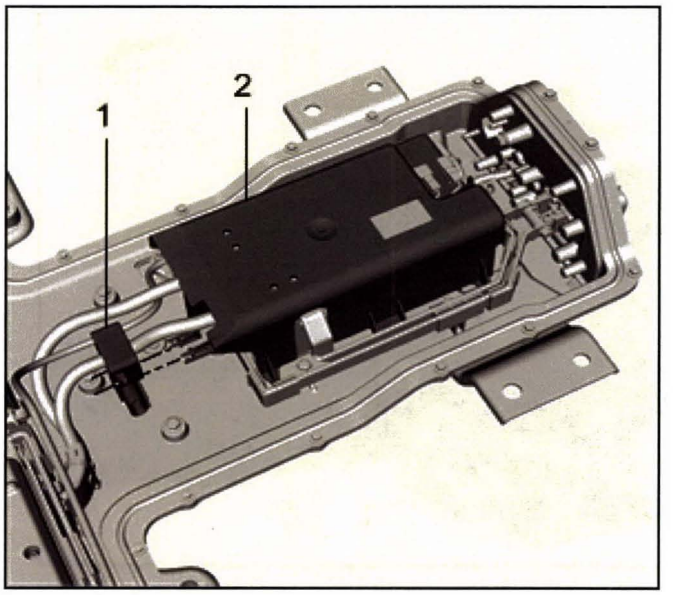

3796348

9. Attach the current sensor (1) to the drive motor high voltage contactor cover (2).
10. Install the drive motor battery cover. Refer to *Drive Motor Battery Cover Replacement on page 9-449*.
11. Install the drive motor battery. Refer to *Drive Motor Battery Replacement and Shipping Preparation on page 9-524*.

Drive Motor Battery Positive and Negative Cable Replacement (Battery Cell 6 to Drive Motor Battery Positive High Voltage Contactor Relay)

Removal Procedure

Danger: Always perform the High Voltage Disabling procedure prior to servicing any High Voltage component or connection. Personal Protection Equipment (PPE) and proper procedures must be followed.

The High Voltage Disabling procedure includes the following steps:

- ***Identify how to disable high voltage.***
- ***Identify how to test for the presence of high voltage.***
- ***Identify condition under which high voltage is always present and personal protection equipment (PPE) and proper procedures must be followed.***

Before working on any high voltage system, be sure to wear the following Personal Protection Equipment:

- ***Safety glasses with appropriate side shields when within 15 meters (50 feet) of the vehicle, either indoors or outdoors.***
- ***Certified and up-to-date Class "0" Insulation gloves rated at 1000V with leather protectors.***
  - ***Visually and functionally inspect the gloves before use.***
  - ***Wear the Insulation gloves with leather protectors at all times when working with the high voltage battery assembly, whether the system is energized or not.***

Failure to follow the procedures may result in serious injury or death.

1. Remove the drive motor battery. Refer to *Drive Motor Battery Replacement and Shipping Preparation on page 9-524*.
2. Remove the drive motor battery cover. Refer to *Drive Motor Battery Cover Replacement on page 9-449*.

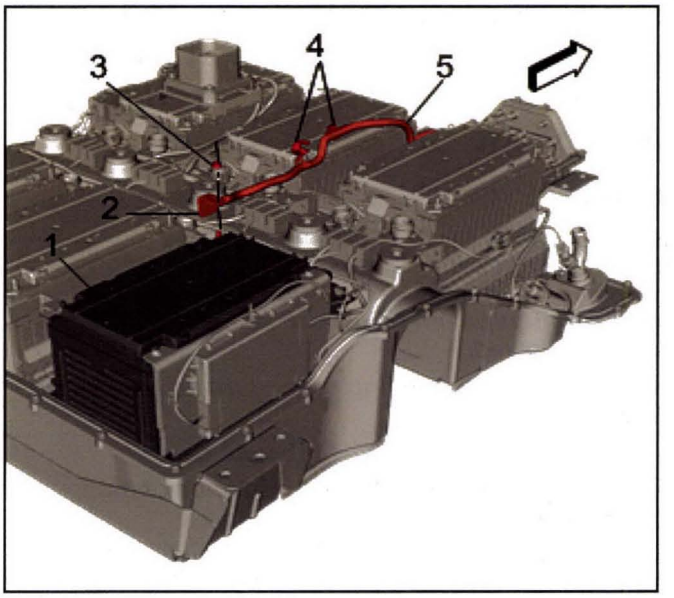

3716362

Note: Cover the battery cell 6 stud with protective tape that is UL® listed or insulation tape rated at a minimum of 600V.

3. Remove the fastener (3) and remove the drive motor high voltage positive cable (2) from battery cell 6 (1) stud.
4. Unclip the drive motor high voltage positive cable retainers (4).

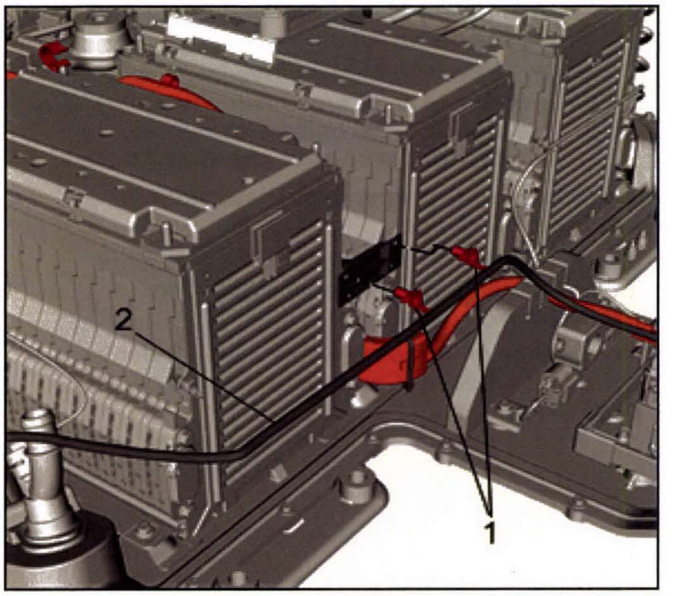

3716363

5. Remove the retainers (1) and reposition the heater assembly harness (2).
   Note: Make note of the position of the cable ties.

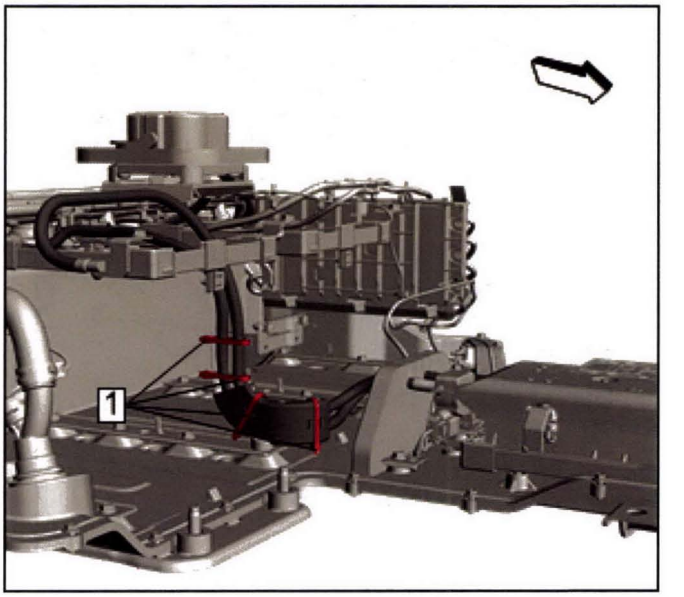

4092521

6. Remove the cable ties (1) securing the cables and cable shield halves.

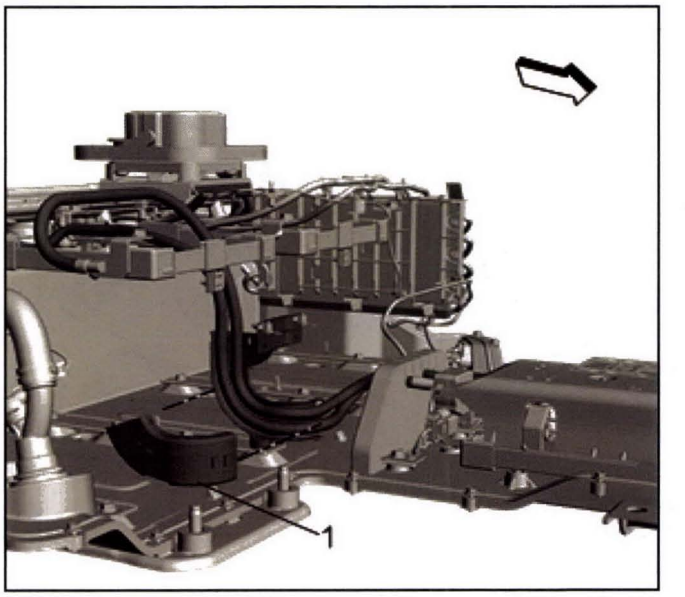

4092527

7. Remove the outer cable shield half (1).

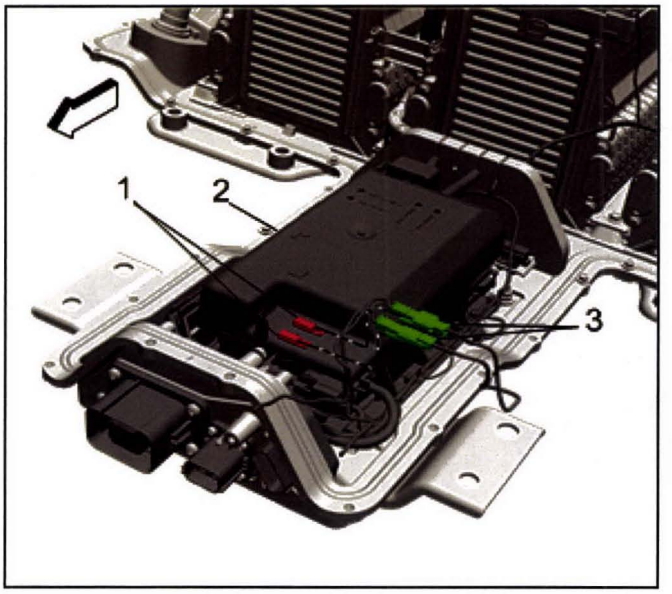

3707863

8. Unclip the connectors (3), from the retainer clips (1), on top of the drive motor battery high voltage contactor cover (2).

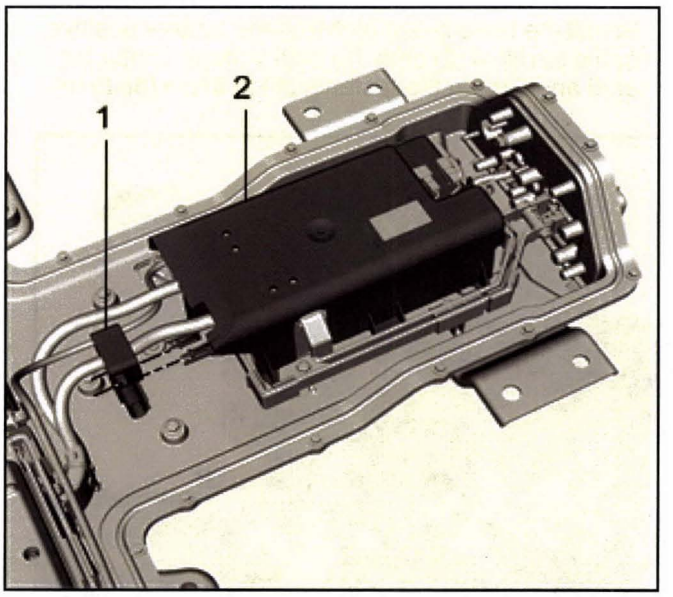

3796348

9. Detach the current sensor (1) from the drive motor battery high voltage contactor cover.

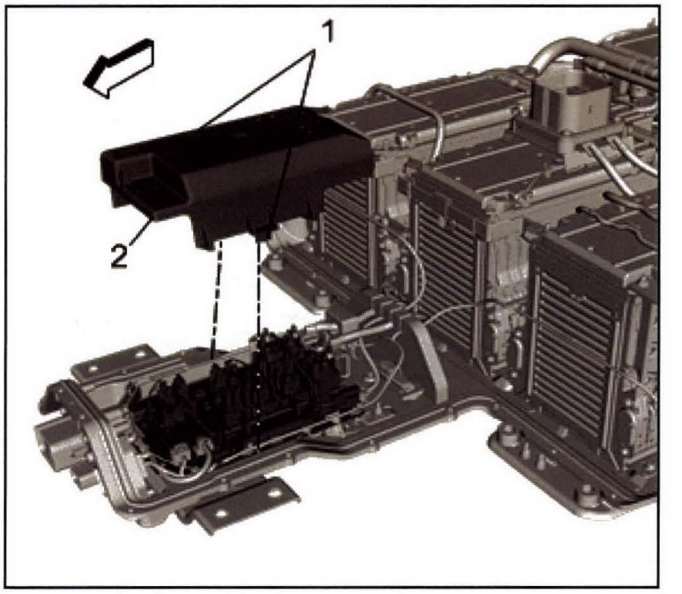

3707867

10. Using an appropriate tool, release the retaining tabs (1) and remove the drive motor battery high voltage contactor cover (2).

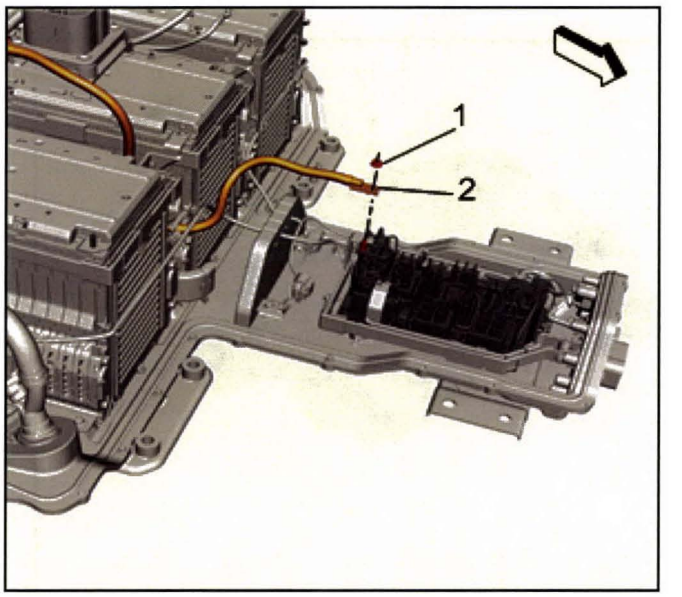

3707872

11. Remove the fastener (1) and remove the drive motor high voltage battery positive cable terminal (2), from the drive motor battery contactor relay.

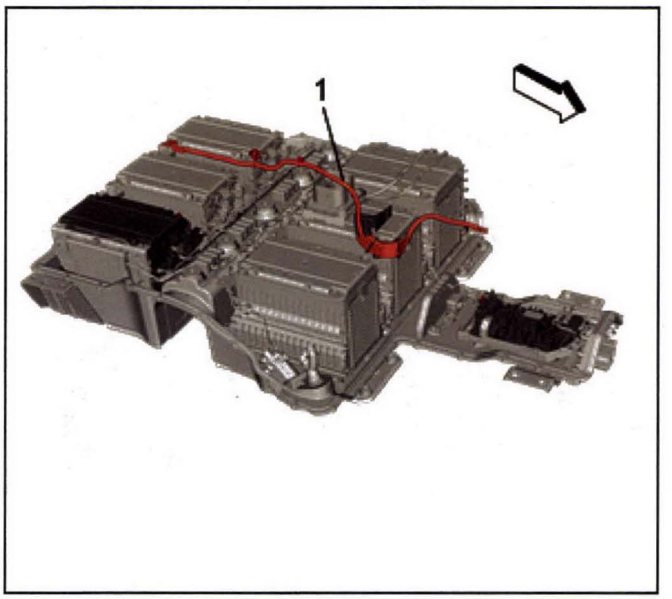

3716365

12. Remove the drive motor high voltage battery positive cable (1).

Installation Procedure

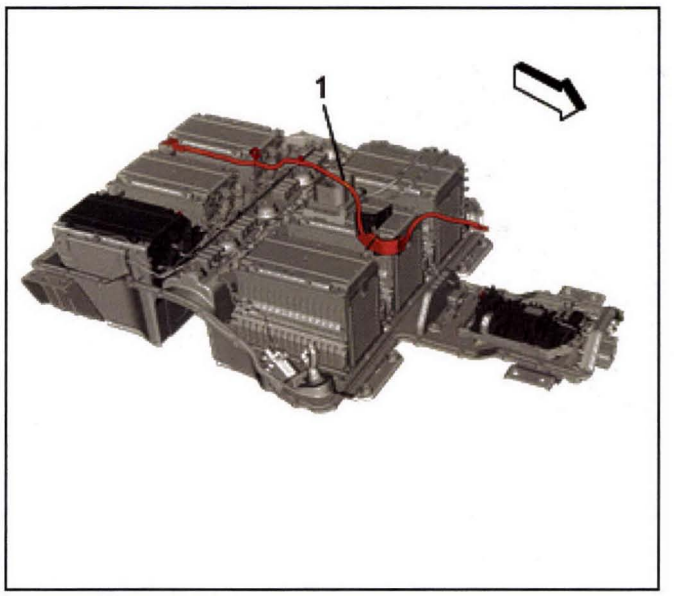

3716365

1. Install the drive motor high voltage battery positive cable (1) into position.

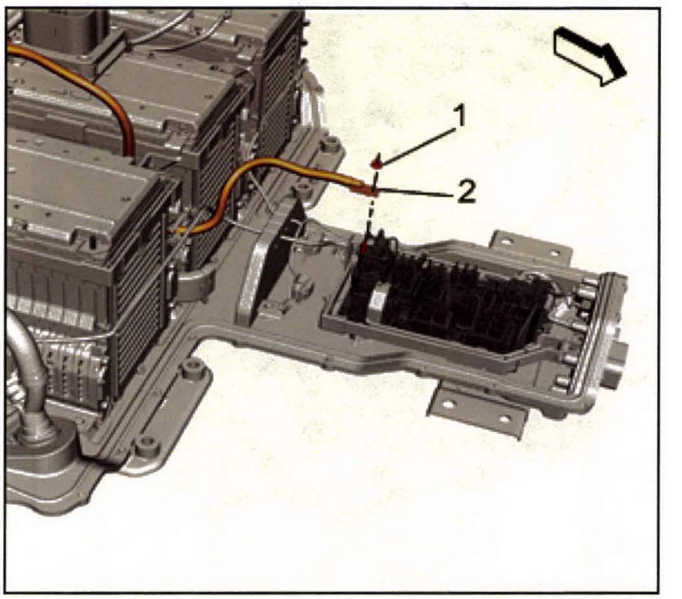

3707872

Caution: Refer to *Fastener Caution on page 0-8*.

Note: Critical high voltage fastener. Perform second torque verification check following re-assembly.

2. Install the drive motor high voltage battery positive cable terminal (2) onto the high voltage contactor stud and tighten the fastener (1) to **9** N•m **(80 lb in)**.

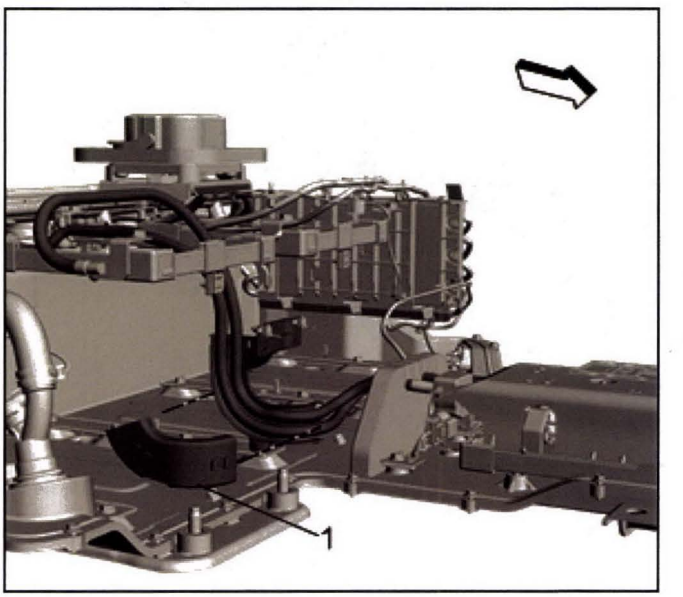

4092527

3. Position the outer cable shield half (1).

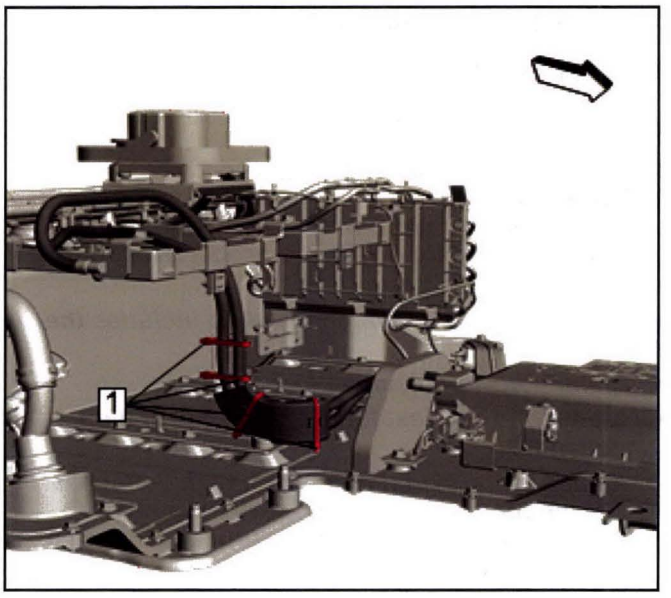

4092521

4. Install the cable ties (1) to secure the cables and the cable shield halves.

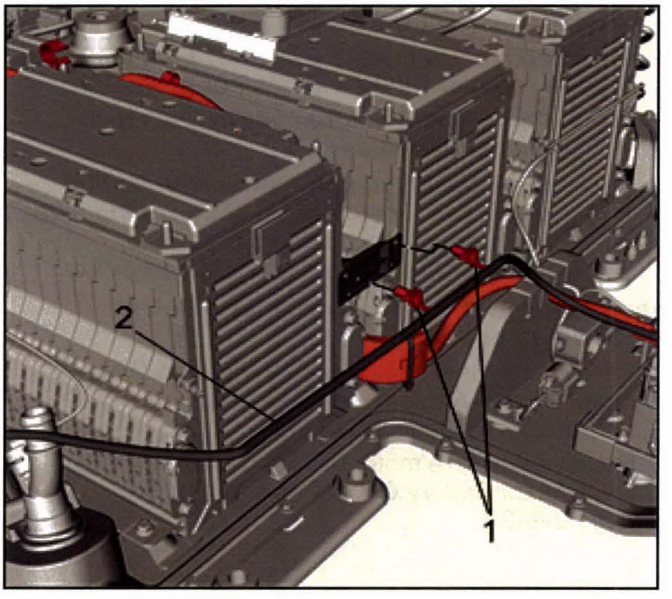

3716363

5. Install the heater assembly harness retainers (1).

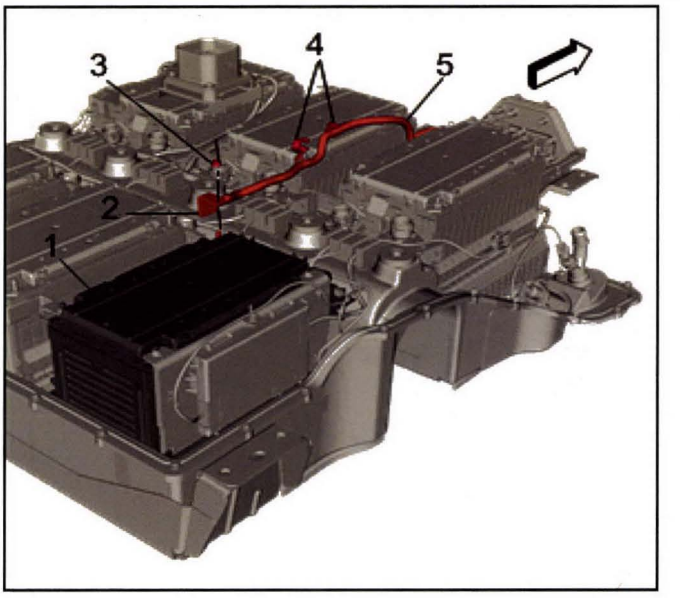

3716362

Note: Critical high voltage fastener. Perform second torque verification check following re-assembly.

6. Install the drive motor high voltage battery positive cable terminal (2) to the battery cell (1) stud. Tighten the fastener (3) to **9** N•m **(80 lb in)**.
7. Install the drive motor high voltage battery positive cable retainers (4).

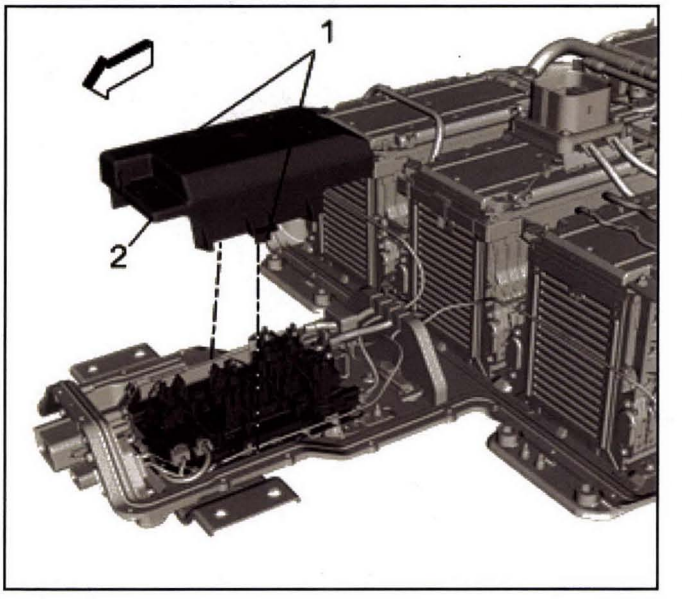

3707867

8. Install the drive motor battery high voltage contactor cover (2) with the retaining tabs (1).

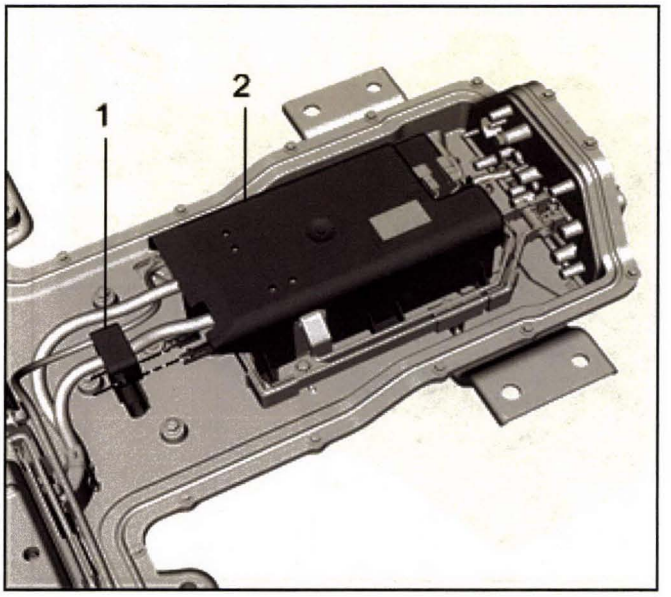

3796348

9. Attach the current sensor (1) to the drive motor battery high voltage contactor cover (2).

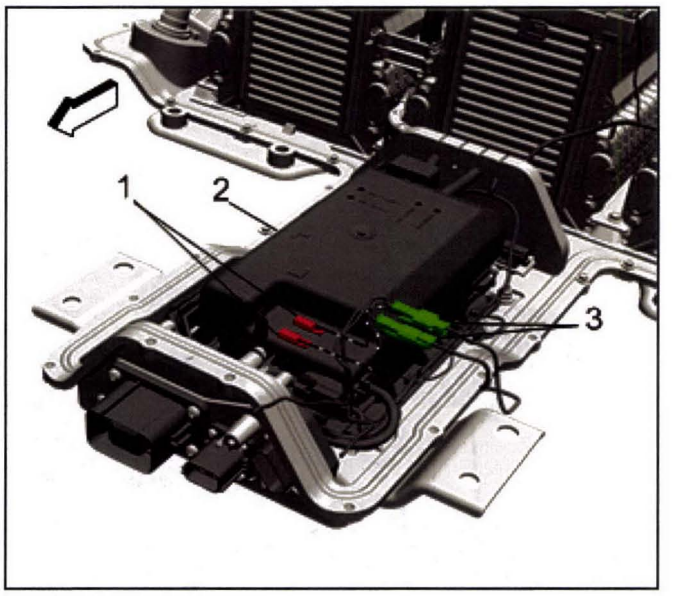

3707863

10. Install the connectors (3) into the retainer clips (1) on the drive motor battery high voltage contactor cover (2).
11. Install the drive motor battery cover. Refer to *Drive Motor Battery Cover Replacement on page 9-449*.
12. Install the drive motor battery. Refer to *Drive Motor Battery Replacement and Shipping Preparation on page 9-524*.

High Voltage Battery Interface Control Module Replacement

Removal Procedure

Danger: Always perform the High Voltage Disabling procedure prior to servicing any High Voltage component or connection. Personal Protection Equipment (PPE) and proper procedures must be followed.

The High Voltage Disabling procedure includes the following steps:

- ***Identify how to disable high voltage.***
- ***Identify how to test for the presence of high voltage.***
- ***Identify condition under which high voltage is always present and personal protection equipment (PPE) and proper procedures must be followed.***

Before working on any high voltage system, be sure to wear the following Personal Protection Equipment:

- ***Safety glasses with appropriate side shields when within 15 meters (50 feet) of the vehicle, either indoors or outdoors.***
- ***Certified and up-to-date Class "0" Insulation gloves rated at 1000V with leather protectors.***
  - ***Visually and functionally inspect the gloves before use.***
  - ***Wear the Insulation gloves with leather protectors at all times when working with the high voltage battery assembly, whether the system is energized or not.***

Failure to follow the procedures may result in serious injury or death.

1. Remove the drive motor battery. Refer to *Drive Motor Battery Replacement and Shipping Preparation on page 9-524*.
2. Remove the drive motor battery cover. Refer to *Drive Motor Battery Cover Replacement on page 9-449*.

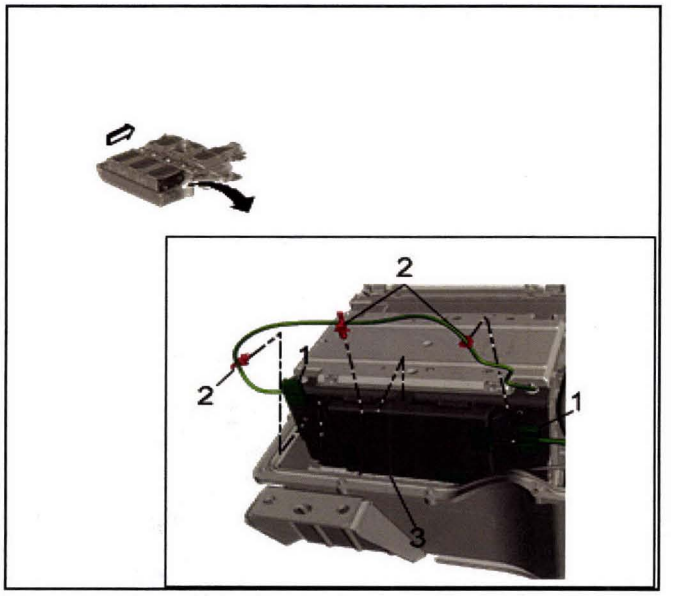

3710456

3. Disconnect the connectors (1) from the drive motor battery interface module (3).
4. Disconnect the harness retainers (2) from the drive motor battery interface module bracket.

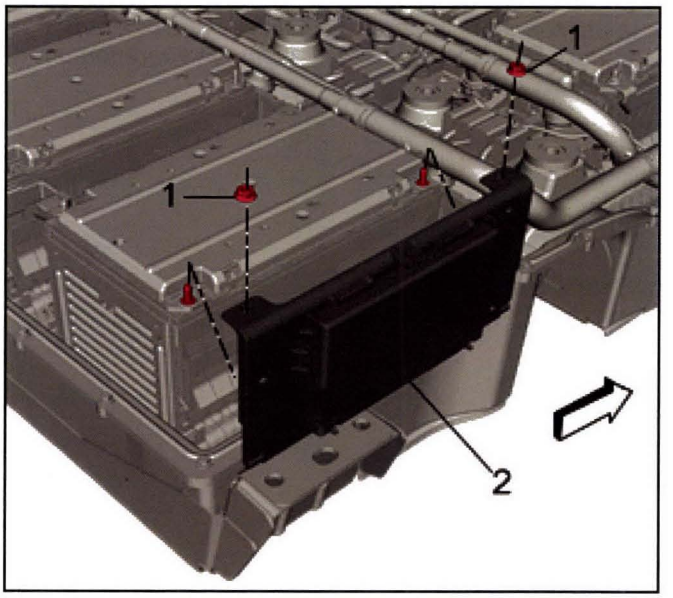

3710461

5. Remove the fasteners (1), securing the drive motor battery interface module (2), to cell battery 6.
6. Lift the drive motor battery interface module slowly upwards to gain access to the lower connector.

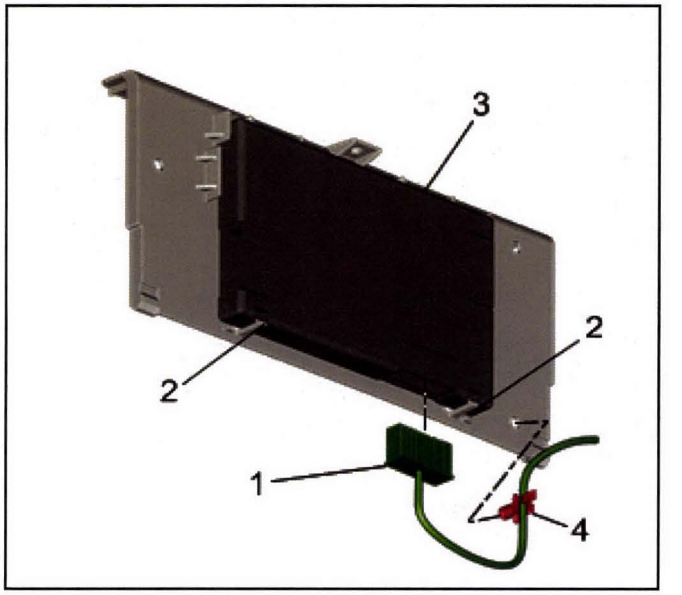

3710463

7. Disconnect the harness retainer (4) and remove the drive motor battery interface module connector (1).
8. Bend back the retainer tabs (2) and remove the drive motor battery interface module (3) from the bracket.

Installation Procedure

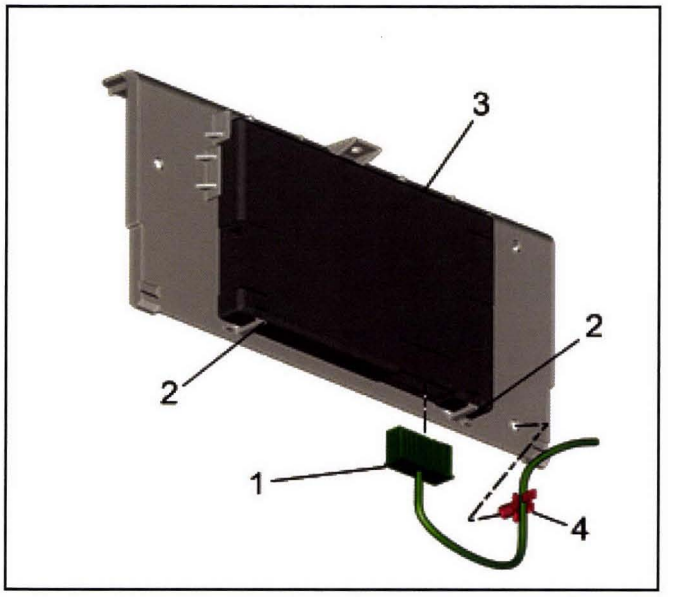

3710463

1. Install the drive motor battery interface module (3) into the bracket.
2. Connect the lower connector (1) and the harness retainer (4).

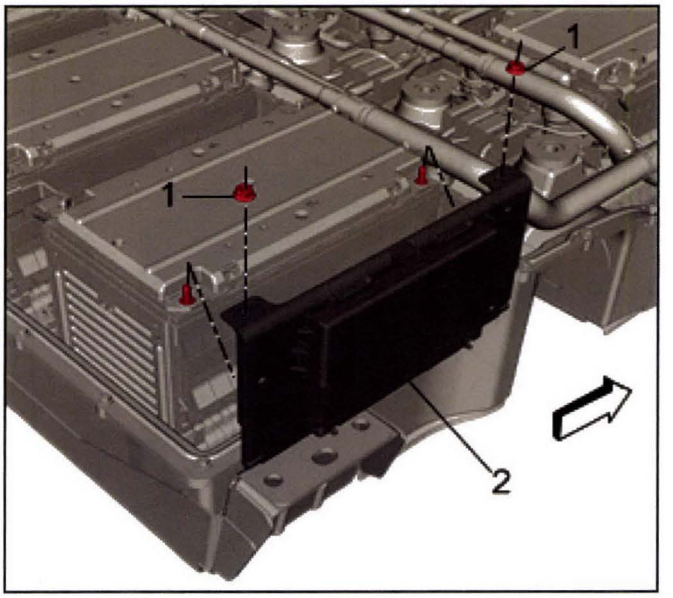

3710461

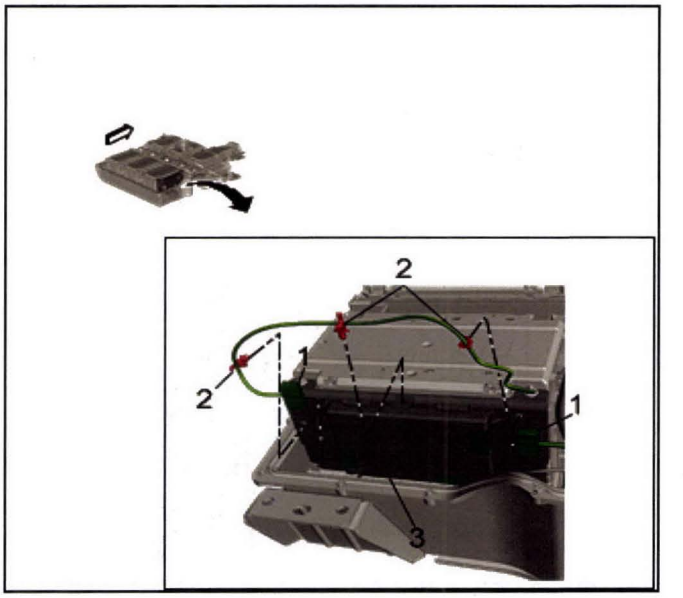

3710456

Caution: Refer to *Fastener Caution on page 0-8*.

3. Install the drive motor battery interface module (2) to the cell battery 6 studs and tighten the fasteners (1) to **9** N•m **(80 lb in)**.
4. Install the connectors (1) and the harness retainers (2), to the drive motor battery interface module (3).
5. Install the drive motor battery cover. Refer to *Drive Motor Battery Cover Replacement on page 9-449*.
6. Install the drive motor battery. Refer to *Drive Motor Battery Replacement and Shipping Preparation on page 9-524*.

Battery Cable Replacement (Drive Motor Generator Power Inverter Module to Frame Rail)

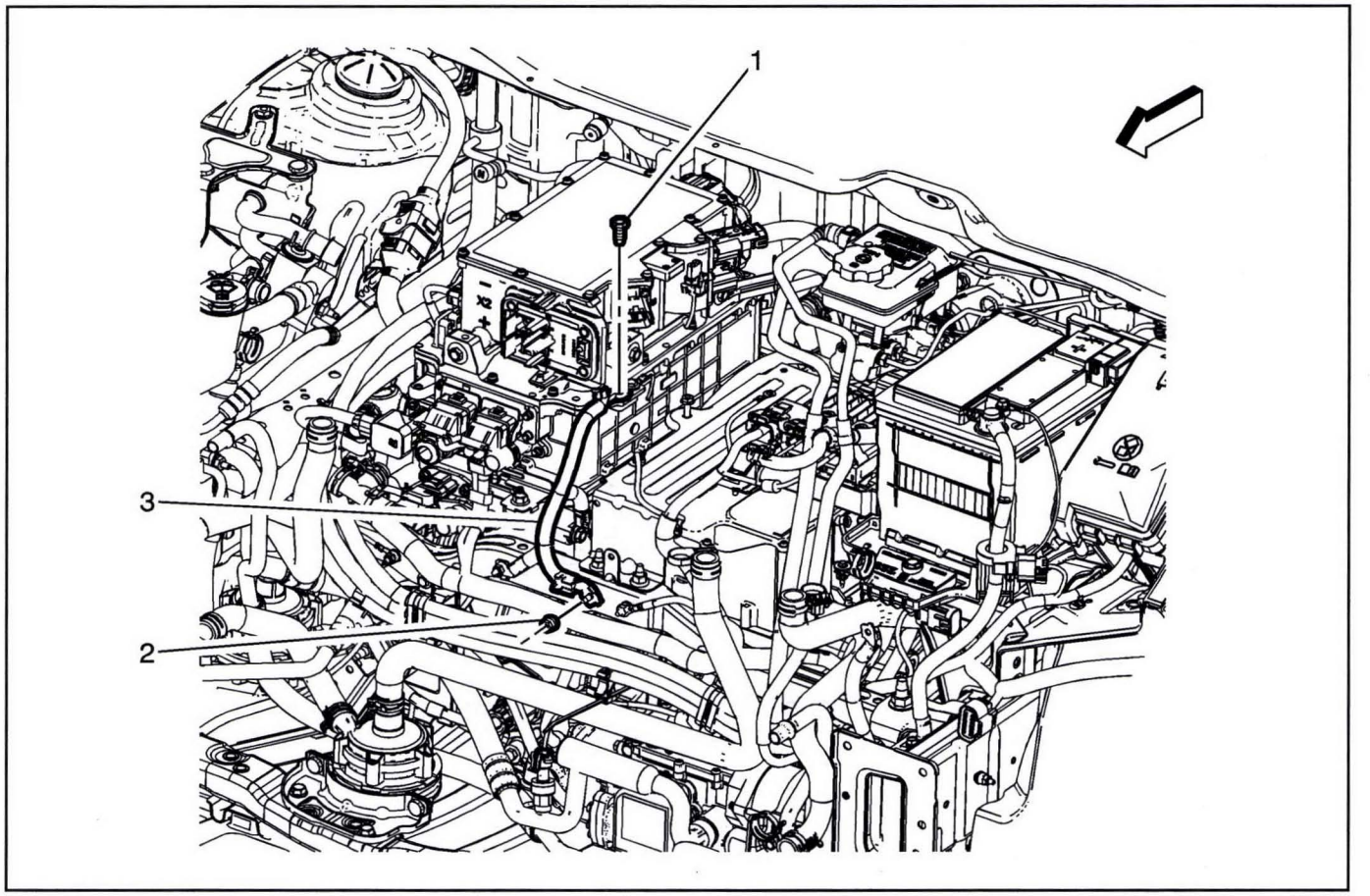

3232250

Battery Cable Replacement (Drive Motor Generator Power Inverter Module to Frame Rail)

Callout	Component Name
	Danger: Always perform the High Voltage Disabling procedure prior to servicing any High Voltage component or connection. Personal Protection Equipment (PPE) and proper procedures must be followed. ***The High Voltage Disabling procedure includes the following steps:*** • ***Identify how to disable high voltage.*** • ***Identify how to test for the presence of high voltage.*** • ***Identify condition under which high voltage is always present and personal protection equipment (PPE) and proper procedures must be followed.*** ***Before working on any high voltage system, be sure to wear the following Personal Protection Equipment:*** • ***Safety glasses with appropriate side shields when within 15 meters (50 feet) of the vehicle, either indoors or outdoors.*** • ***Certified and up-to-date Class "0" Insulation gloves rated at 1000V with leather protectors.*** – ***Visually and functionally inspect the gloves before use.*** – ***Wear the Insulation gloves with leather protectors at all times when working with the high voltage battery assembly, whether the system is energized or not.*** ***Failure to follow the procedures may result in serious injury or death.*** **Preliminary Procedure** Remove the high voltage disconnect circuit connector cover. Refer to *High Voltage Disconnect Circuit Connector Cover Replacement on page 9-174*.
1	Battery Cable Fastener **Caution:** Refer to *Fastener Caution on page 0-8*. **Tighten:** 9 N•m (80 lb in)

Battery Cable Replacement (Drive Motor Generator Power Inverter Module to Frame Rail) (cont'd)

Callout	Component Name
2	Battery Cable Fastener **Caution:** Refer to *Fastener Caution on page 0-8.* **Tighten:** 9 N•m (80 lb in)
3	Battery Cable

Battery Cable Replacement (APM Module to Frame Rail)

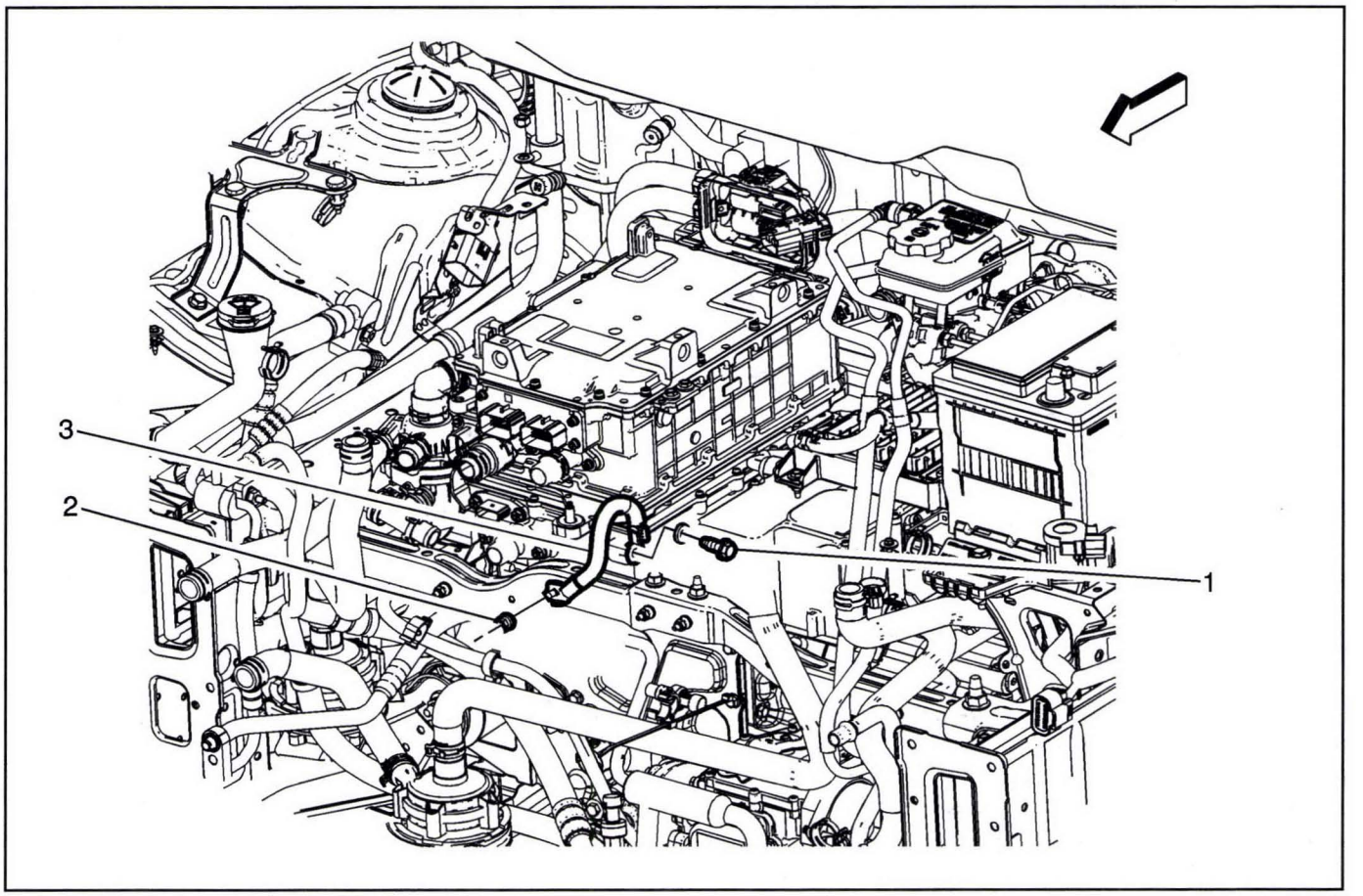

3232236

Battery Cable Replacement (APM Module to Frame Rail)

Callout	Component Name
Danger: Always perform the High Voltage Disabling procedure prior to servicing any High Voltage component or connection. Personal Protection Equipment (PPE) and proper procedures must be followed. ***The High Voltage Disabling procedure includes the following steps:*** • ***Identify how to disable high voltage.*** • ***Identify how to test for the presence of high voltage.*** • ***Identify condition under which high voltage is always present and personal protection equipment (PPE) and proper procedures must be followed.*** ***Before working on any high voltage system, be sure to wear the following Personal Protection Equipment:*** • ***Safety glasses with appropriate side shields when within 15 meters (50 feet) of the vehicle, either indoors or outdoors.*** • ***Certified and up-to-date Class "0" Insulation gloves rated at 1000V with leather protectors.*** – ***Visually and functionally inspect the gloves before use.*** – ***Wear the Insulation gloves with leather protectors at all times when working with the high voltage battery assembly, whether the system is energized or not.*** ***Failure to follow the procedures may result in serious injury or death.*** **Preliminary Procedure** Remove the high voltage disconnect circuit connector cover. Refer to *High Voltage Disconnect Circuit Connector Cover Replacement on page 9-174*.	
1	Battery Cable Fastener **Caution:** Refer to *Fastener Caution on page 0-8*. **Tighten** 22 N•m (16 lb ft)
2	Battery Cable Fastener **Tighten** 9 N•m (80 lb in)
3	Battery Cable

Battery Cable Replacement (Drive Motor Contactor Relay High Voltage Bus Bar)

Removal Procedure

Danger: Always perform the High Voltage Disabling procedure prior to servicing any High Voltage component or connection. Personal Protection Equipment (PPE) and proper procedures must be followed.

The High Voltage Disabling procedure includes the following steps:

- ***Identify how to disable high voltage.***
- ***Identify how to test for the presence of high voltage.***
- ***Identify condition under which high voltage is always present and personal protection equipment (PPE) and proper procedures must be followed.***

Before working on any high voltage system, be sure to wear the following Personal Protection Equipment:

- ***Safety glasses with appropriate side shields when within 15 meters (50 feet) of the vehicle, either indoors or outdoors.***
- ***Certified and up-to-date Class "0" Insulation gloves rated at 1000V with leather protectors.***
  - ***Visually and functionally inspect the gloves before use.***
  - ***Wear the Insulation gloves with leather protectors at all times when working with the high voltage battery assembly, whether the system is energized or not.***

Failure to follow the procedures may result in serious injury or death.

1. Remove the drive motor battery. Refer to *Drive Motor Battery Replacement and Shipping Preparation on page 9-524*.
2. Remove the drive motor battery cover. Refer to *Drive Motor Battery Cover Replacement on page 9-449*.

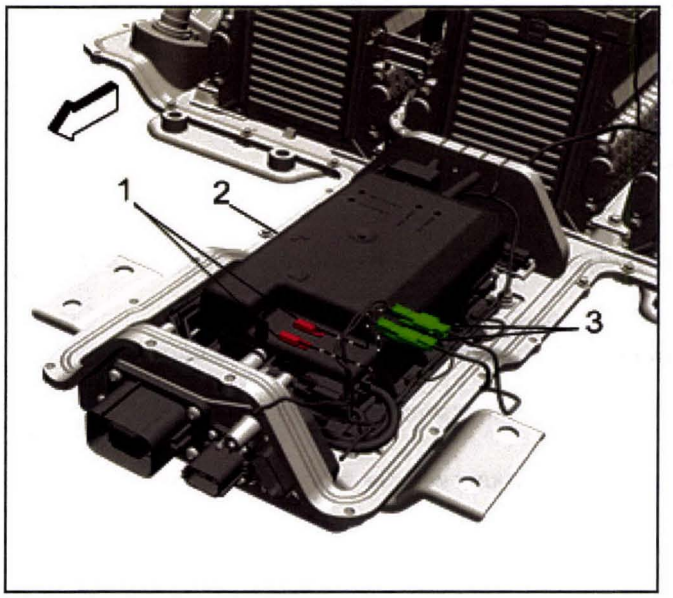

3707863

3. Unclip the connectors (3), from the retainer clips (1), on top of the drive motor battery high voltage contactor cover (2).

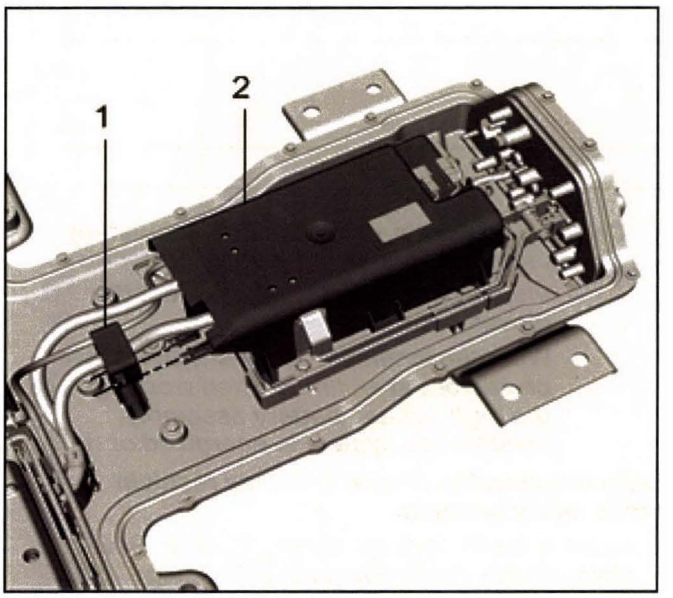

3796348

4. Detach the current sensor (1) from the drive motor battery high voltage contactor cover.

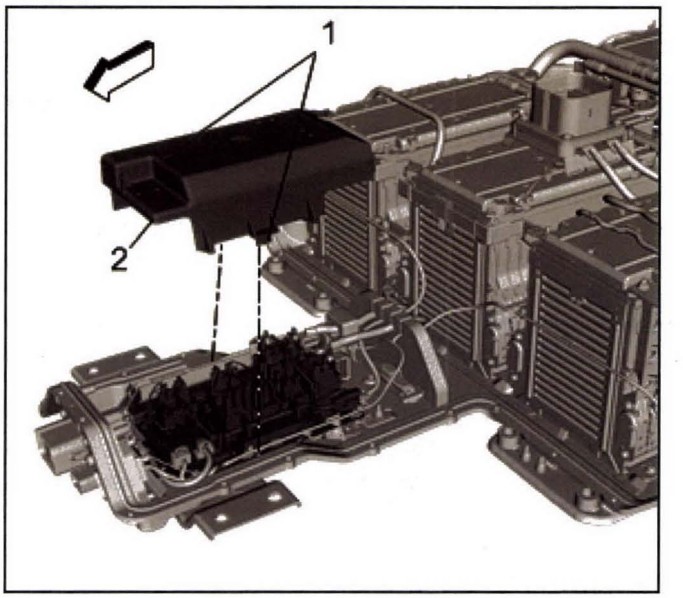

3707867

5. Using an appropriate tool, release the retaining tabs (1) and remove the drive motor battery high voltage contactor cover (2).

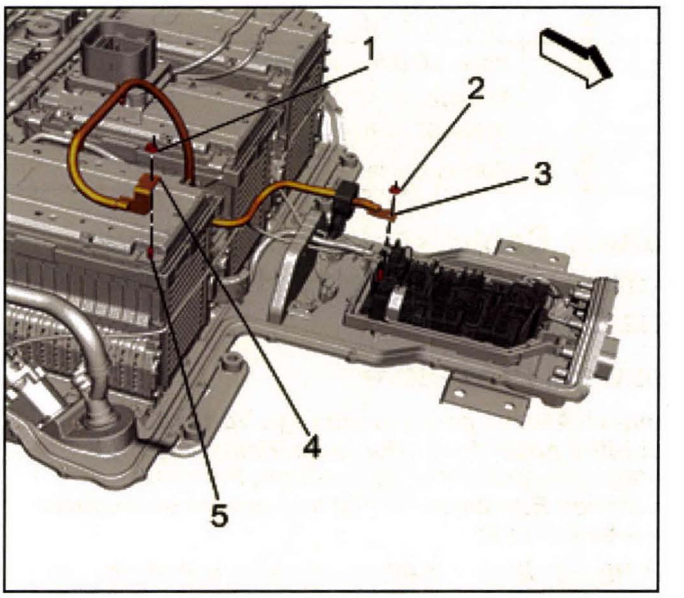

3707869

Note: Cover the battery cell stud (5) with protective tape that is UL® listed or insulation tape rated at a minimum of 600V.

6. Remove the fastener (1) and remove the high voltage negative cable terminal (4) from the battery cell 1 stud (5).
7. Remove the fastener (2) and remove the high voltage negative cable terminal (3), from the drive motor battery high voltage contactor stud.

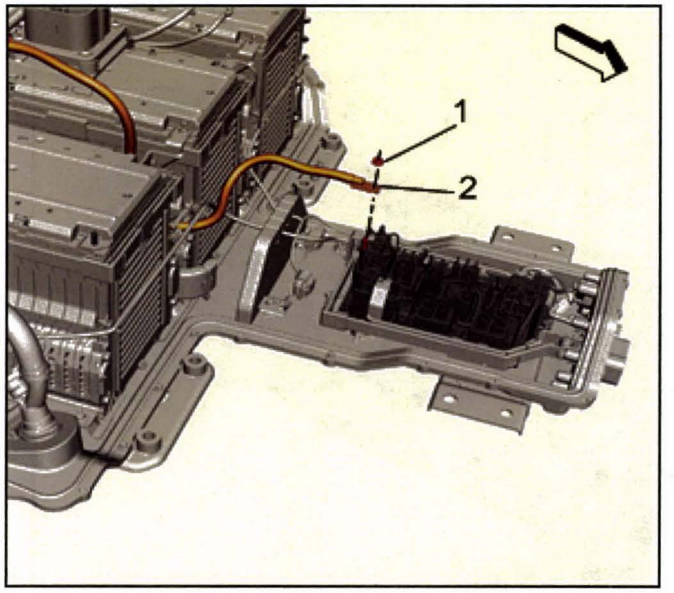

3707872

Note: Cover the high voltage cable terminal (2) with protective tape that is UL® listed or insulation tape rated at a minimum of 600V.

8. Remove the fastener (1) and remove the high voltage positive cable terminal (2) from the drive motor battery high voltage contactor stud.

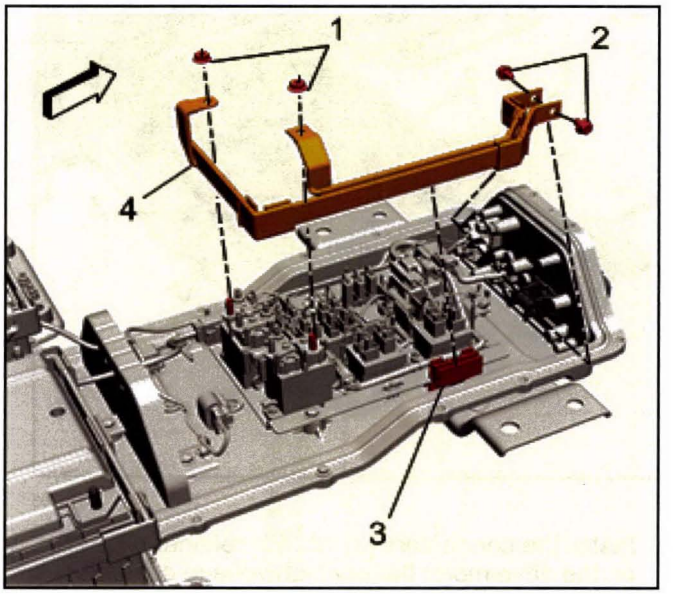

3707875

9. Remove the fasteners (1, 2) securing the bus bar (4) to the drive motor battery high voltage contactor. and X1 connector.
10. Remove the bus bar (4) from the retaining clip (3).

Installation Procedure

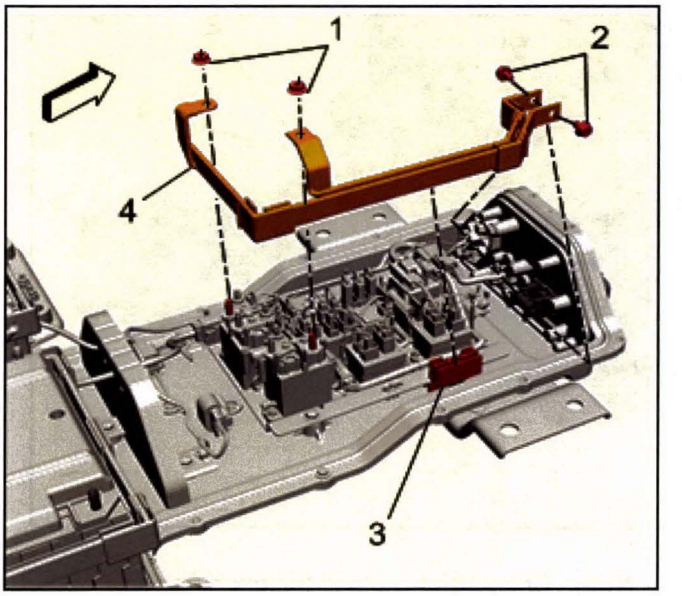

3707875

1. Install the bus bar (4) into the retainer clip (3).

Caution: Refer to *Fastener Caution on page 0-8*.

Note: Critical high voltage fastener. Perform second torque verification check following re-assembly.

2. Tighten the fasteners (2) to **9** N•m **(80 lb in)**.

Note: Critical high voltage fastener. Perform second torque verification check following re-assembly.

3. Tighten the fasteners (1) to **9** N•m **(80 lb in)**.

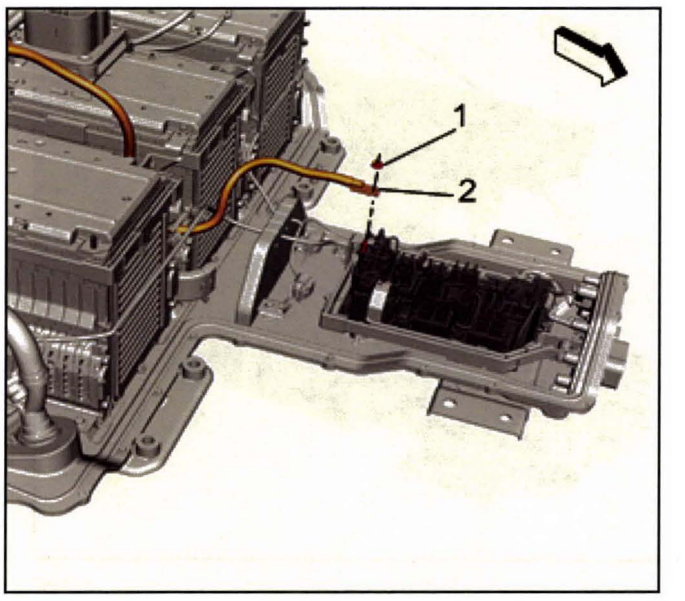

3707872

Note: Critical high voltage fastener. Perform second torque verification check following re-assembly.

4. Install the high voltage positive cable (2) to the contactor stud and tighten the fastener (1) to **9** N•m **(80 lb in)**.

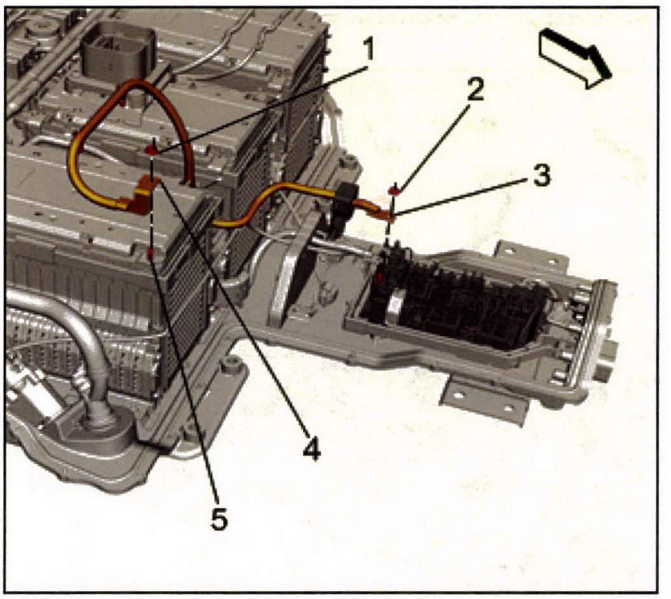

3707869

Note: Critical high voltage fastener. Perform second torque verification check following re-assembly.

5. Install the high voltage negative cable (3) to the contactor stud and tighten the fastener (2) to **9** N•m **(80 lb in)**.

   Note: Critical high voltage fastener. Perform second torque verification check following re-assembly.

6. Install the high voltage negative cable (4) to the battery cell stud (5) and tighten the fastener (1) to **9** N•m **(80 lb in)**.

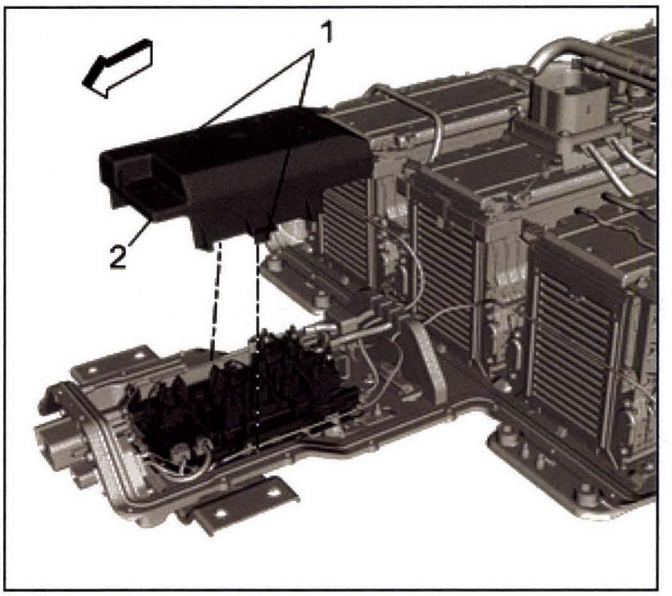

3707867

7. Install the drive motor battery high voltage contactor cover (2) with the retaining tabs (1).

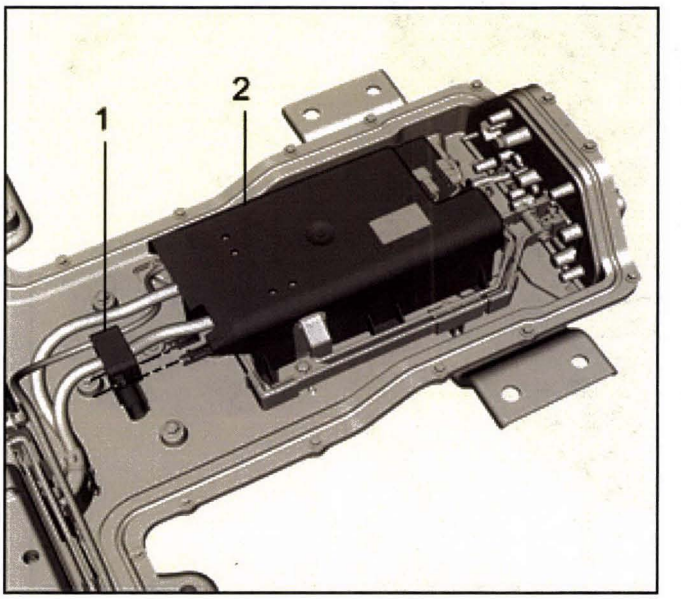

3796348

8. Attach the current sensor (1) to the drive motor battery high voltage contactor cover (2).

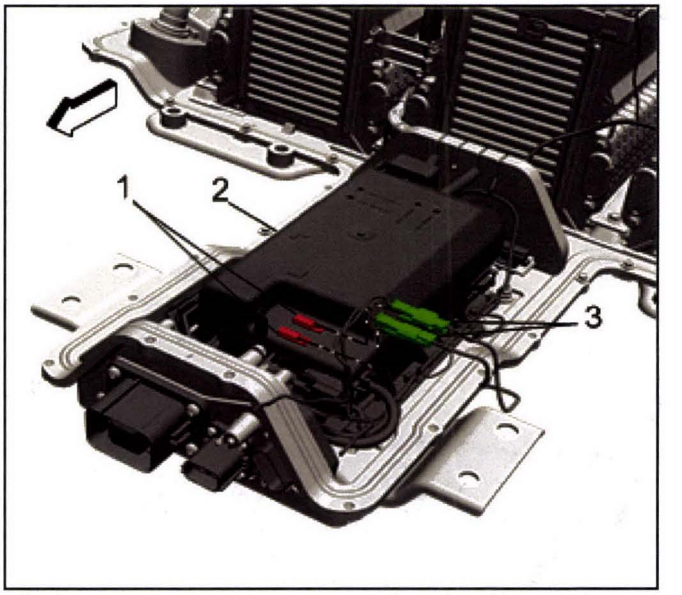

3707863

9. Install the connectors (3) into the retainer clips (1) on the drive motor battery high voltage contactor cover (2).
10. Install the drive motor battery cover. Refer to *Drive Motor Battery Cover Replacement on page 9-449*.
11. Install the drive motor battery. Refer to *Drive Motor Battery Replacement and Shipping Preparation on page 9-524*.

Battery Cable Replacement (Battery Cell High Voltage Cables)

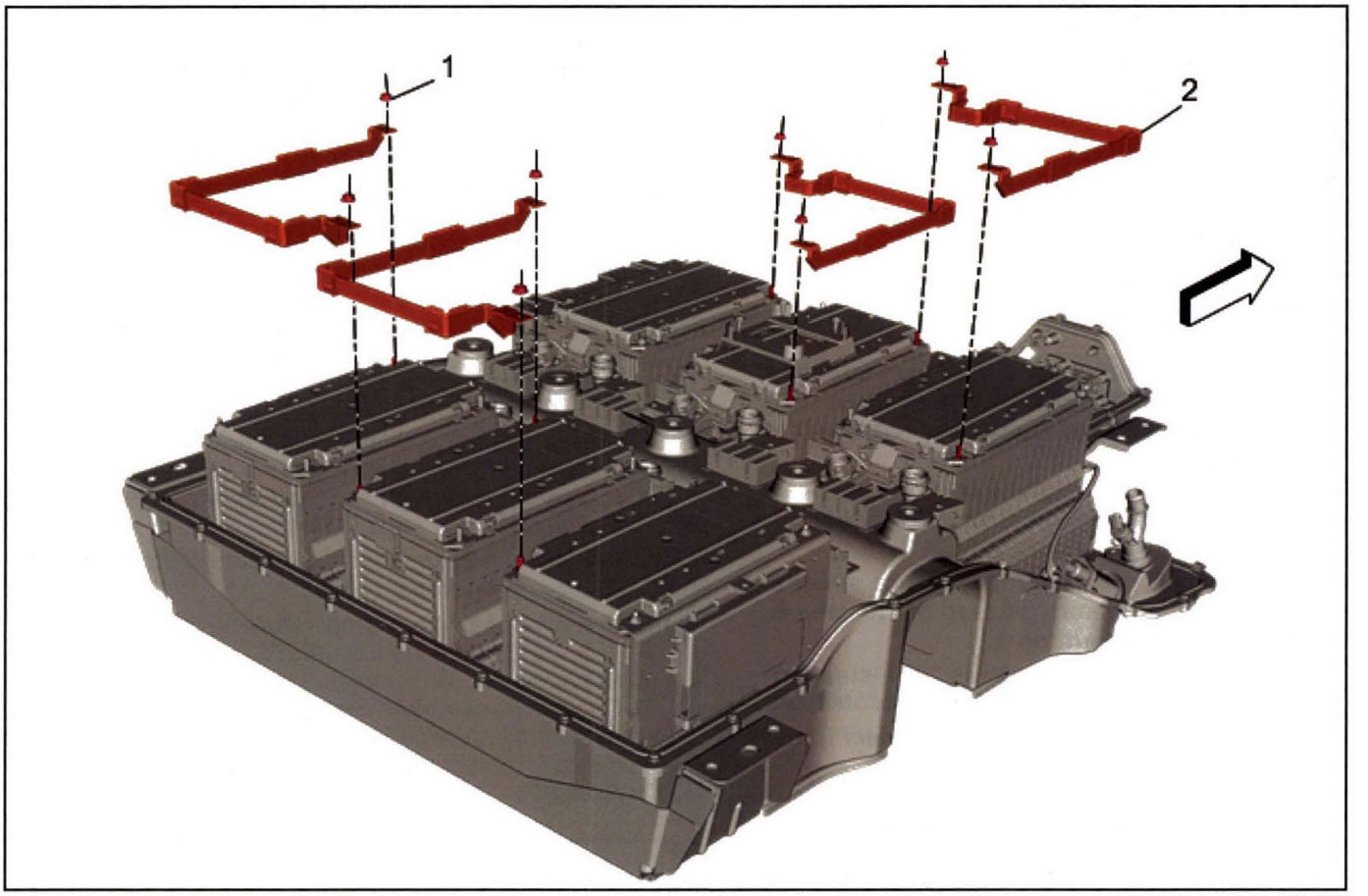

3723651

Battery Cable Replacement (Battery Cell High Voltage Cables)

Callout	Component Name
Danger: Ensure all High Voltage safety procedures are followed. Failure to follow the procedure exactly as written may result in serious injury or death. ***Danger: Before working on any high voltage system, be sure to wear the following Personal Protection Equipment:*** • ***Safety glasses with appropriate side shields when within 50 feet of the vehicle, either indoors or outdoors*** • ***Certified and up-to-date Class "0" Insulation gloves rated at 1000V with leather protectors*** – ***Visually and functionally inspect the gloves before use.*** – ***Wear the Insulation gloves at all times when working with the high voltage battery assembly, whether the system is energized or not.*** ***Failure to follow the procedure exactly as written may result in serious injury or death.*** **Preliminary Procedures** 1. Remove the drive motor battery. Refer to *Drive Motor Battery Replacement and Shipping Preparation on page 9-524*. 2. Remove the drive motor battery cover. Refer to *Drive Motor Battery Cover Replacement on page 9-449*.	
1	Battery Cell High Voltage Cable Fasteners (Qty: 8) **Caution:** Refer to *Fastener Caution on page 0-8*. **Note:** Critical high voltage fastener. Perform second torque verification check following re-assembly. **Tighten** 9 N•m (80 lb in)
2	Battery Cell High Voltage Cables (Qty: 4)

Battery Tray Replacement

Removal Procedure

Danger: Always perform the High Voltage Disabling procedure prior to servicing any High Voltage component or connection. Personal Protection Equipment (PPE) and proper procedures must be followed.

The High Voltage Disabling procedure includes the following steps:

- ***Identify how to disable high voltage.***
- ***Identify how to test for the presence of high voltage.***
- ***Identify condition under which high voltage is always present and personal protection equipment (PPE) and proper procedures must be followed.***

Before working on any high voltage system, be sure to wear the following Personal Protection Equipment:

- ***Safety glasses with appropriate side shields when within 15 meters (50 feet) of the vehicle, either indoors or outdoors.***
- ***Certified and up-to-date Class "0" Insulation gloves rated at 1000V with leather protectors.***
  - ***Visually and functionally inspect the gloves before use.***
  - ***Wear the Insulation gloves with leather protectors at all times when working with the high voltage battery assembly, whether the system is energized or not.***

Failure to follow the procedures may result in serious injury or death.

1. Remove the drive motor battery. Refer to *Drive Motor Battery Replacement and Shipping Preparation on page 9-524*.
2. Remove the drive motor battery cover. Refer to *Drive Motor Battery Cover Replacement on page 9-449*.
3. Remove the cell battery cooling manifold outlet hose. Refer to *High Voltage Battery Cooling Manifold Outlet Hose Replacement (Coolant to all Battery Cells) on page 9-339* or *High Voltage Battery Cooling Manifold Outlet Hose Replacement (Individual Battery Cell Coolant Outlet Hose) on page 9-342*.
4. Remove the cell battery cooling manifold inlet hose. Refer to *High Voltage Battery Cooling Manifold Inlet Hose Replacement (Coolant to all Battery Cells) on page 9-336* or *High Voltage Battery Cooling Manifold Inlet Hose Replacement (Individual Battery Cell Coolant Inlet Hose) on page 9-338*.
5. Remove the high voltage battery disconnect cable. Refer to *High Voltage Battery Disconnect Cable Replacement on page 9-458*.
6. Remove the drive motor battery positive and negative cables. Refer to *Drive Motor Battery Positive and Negative Cable Replacement (Battery Cell 1 to Drive Motor Battery High Voltage Contactor Relay) on page 9-504* or *Drive Motor Battery Positive and Negative Cable Replacement (Battery Cell 6 to Drive Motor Battery Positive High Voltage Contactor Relay) on page 9-507*.
7. Remove all the cell batteries. Refer to *Cell Battery Replacement (Battery Cell 1) on page 9-462* or *Cell Battery Replacement (Battery Cell 2) on page 9-467* or *Cell Battery Replacement (Battery Cell 3) on page 9-473* or *Cell Battery Replacement (Battery Cell 4) on page 9-479* or *Cell Battery Replacement (Battery Cell 5) on page 9-485* or *Cell Battery Replacement (Battery Cell 6) on page 9-490*.
8. Remove the drive motor battery positive high voltage contactor relay. Refer to *Drive Motor Battery Positive High Voltage Contactor Relay Replacement on page 9-499*.
9. Remove the battery heater. Refer to *Battery Heater Replacement on page 9-306*.
10. Remove the coolant temperature sensor assembly. Refer to *Coolant Temperature Sensor Replacement (Assembly) on page 9-271* or *Coolant Temperature Sensor Replacement (Heater Assembly) on page 9-272* or *Coolant Temperature Sensor Replacement (Coolant Temperature Assembly Sensor) on page 9-273*.

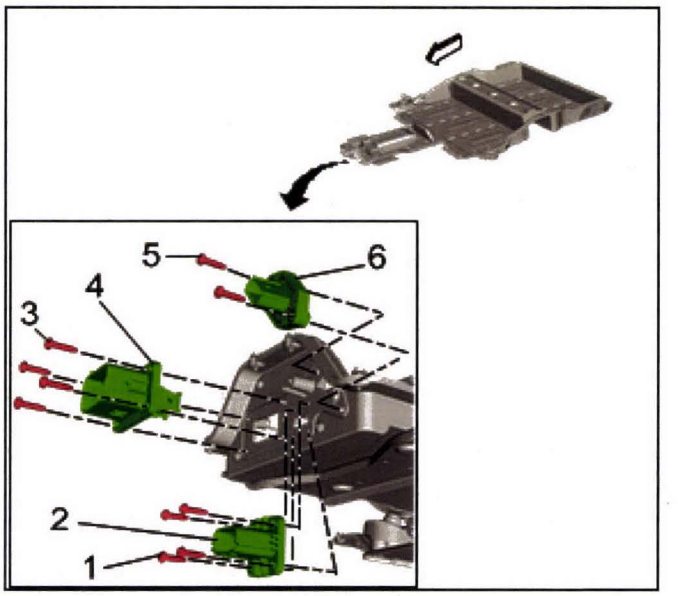

3724371

11. Remove the auxiliary wiring harness X2 fasteners (1) and transfer the auxiliary wiring harness X2 connector (2) to the NEW battery tray.
12. Remove the auxiliary wiring harness X1 fasteners (3) and transfer the auxiliary wiring harness X1 connector (4) to the NEW battery tray.
13. Remove the auxiliary wiring harness X357 fasteners (1) and transfer the auxiliary wiring harness X357 connector (6) to the NEW battery tray.

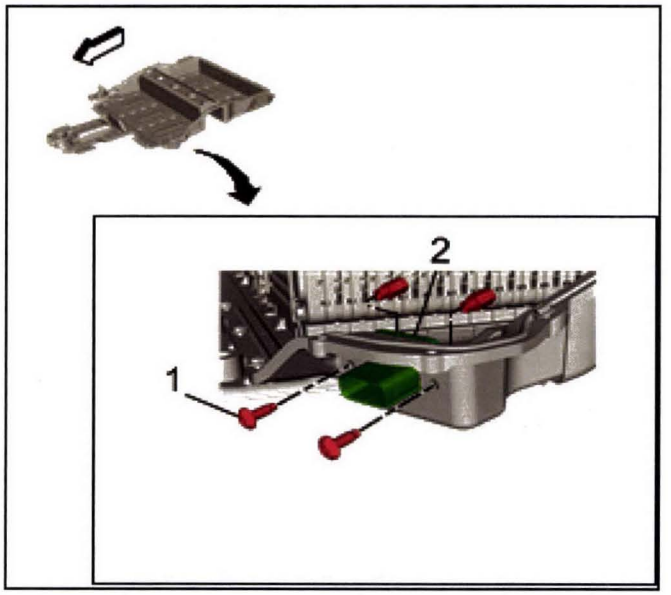

3724369

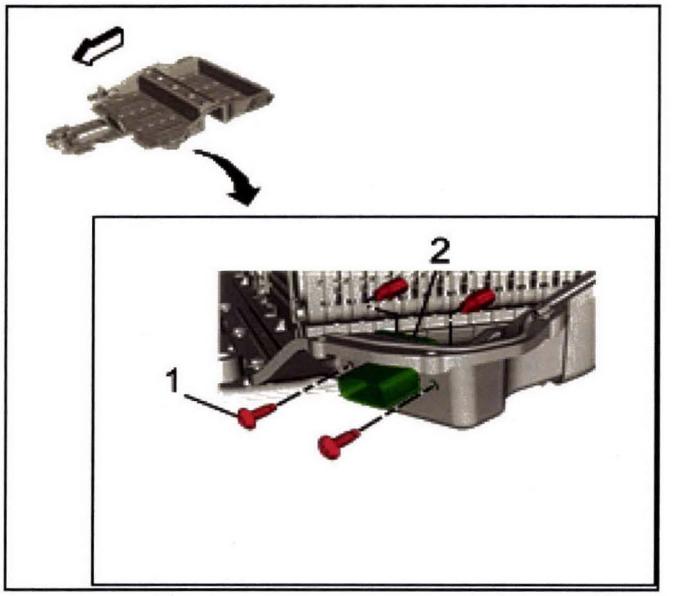

3724369

14. Remove the auxiliary wiring harness X358 connector fasteners (1) and transfer the auxiliary wiring harness X358 connector (2) to the NEW battery tray.

Installation Procedure

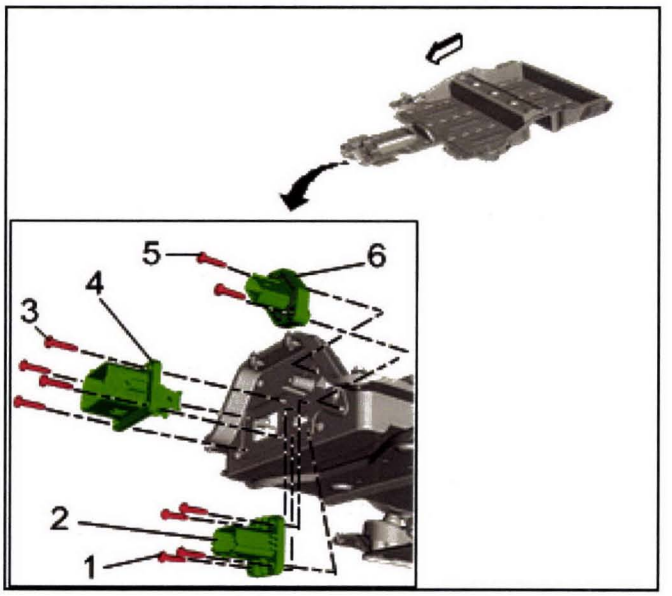

3724371

Caution: Refer to *Fastener Caution on page 0-8*.

1. Install the auxiliary wiring harness X357 connector (6) and tighten the fasteners (5) to **9** N•m **(80 lb in)**.
2. Install the auxiliary wiring harness X2 connector (2) and tighten the fasteners (1) to **9** N•m **(80 lb in)**.
3. Install the auxiliary wiring harness X1 connector (4) and tighten the fasteners (3) to **9** N•m **(80 lb in)**.
4. Install the auxiliary wiring harness X358 connector (2) to the battery tray and tighten the fasteners (1) to **6** N•m **(53 lb in)**.
5. Install the battery heater. Refer to *Battery Heater Replacement on page 9-306*.
6. Install the coolant temperature sensor assembly. Refer to *Coolant Temperature Sensor Replacement (Assembly) on page 9-271* or *Coolant Temperature Sensor Replacement (Heater Assembly) on page 9-272* or *Coolant Temperature Sensor Replacement (Coolant Temperature Assembly Sensor) on page 9-273*.
7. Install all the cell batteries. Refer to *Cell Battery Replacement (Battery Cell 1) on page 9-462* or *Cell Battery Replacement (Battery Cell 2) on page 9-467* or *Cell Battery Replacement (Battery Cell 3) on page 9-473* or *Cell Battery Replacement (Battery Cell 4) on page 9-479* or *Cell Battery Replacement (Battery Cell 5) on page 9-485* or *Cell Battery Replacement (Battery Cell 6) on page 9-490*.
8. Install the drive motor battery positive high voltage contactor relay. Refer to *Drive Motor Battery Positive High Voltage Contactor Relay Replacement on page 9-499*.
9. Connect the auxiliary battery wiring harnesses. Refer to *Auxiliary Battery Wiring Harness Replacement (High Voltage Connector X2) on page 9-530* or *Auxiliary Battery Wiring Harness Replacement (Connector X1) on page 9-531* or *Auxiliary Battery Wiring Harness Replacement (Battery Cell Temperature Sensors, Current Sensor, X357, X358) on page 9-532* or *Auxiliary Battery Wiring Harness Replacement (Battery Cell Connectors, Battery Energy Control Module, Battery Interface Control Module) on page 9-535*.
10. Install the high voltage battery disconnect cable. Refer to *High Voltage Battery Disconnect Cable Replacement on page 9-458*.

11. Install the drive motor battery positive and negative cables. Refer to *Drive Motor Battery Positive and Negative Cable Replacement (Battery Cell 1 to Drive Motor Battery High Voltage Contactor Relay) on page 9-504* or *Drive Motor Battery Positive and Negative Cable Replacement (Battery Cell 6 to Drive Motor Battery Positive High Voltage Contactor Relay) on page 9-507*.
12. Install the cell battery cooling manifold inlet hose. Refer to *High Voltage Battery Cooling Manifold Inlet Hose Replacement (Coolant to all Battery Cells) on page 9-336* or *High Voltage Battery Cooling Manifold Inlet Hose Replacement (Individual Battery Cell Coolant Inlet Hose) on page 9-338*.
13. Install the cell battery cooling manifold outlet hose. Refer to *High Voltage Battery Cooling Manifold Outlet Hose Replacement (Coolant to all Battery Cells) on page 9-339* or *High Voltage Battery Cooling Manifold Outlet Hose Replacement (Individual Battery Cell Coolant Outlet Hose) on page 9-342*.
14. Install the drive motor battery cover. Refer to *Drive Motor Battery Cover Replacement on page 9-449*.
15. Install the drive motor battery. Refer to *Drive Motor Battery Replacement and Shipping Preparation on page 9-524*.

Drive Motor Battery Replacement and Shipping Preparation

Special Tools

- *OTC-1585A* Battery Lift Table
- *EL-50971* Battery Lifting Strap

For equivalent regional tools, refer to *Special Tools on page 9-549*.

Removal Procedure

Danger: Always perform the High Voltage Disabling procedure prior to servicing any High Voltage component or connection. Personal Protection Equipment (PPE) and proper procedures must be followed.

The High Voltage Disabling procedure includes the following steps:

- ***Identify how to disable high voltage.***
- ***Identify how to test for the presence of high voltage.***
- ***Identify condition under which high voltage is always present and personal protection equipment (PPE) and proper procedures must be followed.***

Before working on any high voltage system, be sure to wear the following Personal Protection Equipment:

- ***Safety glasses with appropriate side shields when within 15 meters (50 feet) of the vehicle, either indoors or outdoors.***
- ***Certified and up-to-date Class "0" Insulation gloves rated at 1000V with leather protectors.***
  - ***Visually and functionally inspect the gloves before use.***
  - ***Wear the Insulation gloves with leather protectors at all times when working with the high voltage battery assembly, whether the system is energized or not.***

Failure to follow the procedures may result in serious injury or death.

1. Disable the high voltage system. Refer to *High Voltage Disabling on page 9-363*.
2. Remove the underbody front air deflector. Refer to *Underbody Front Air Deflector Replacement (Center) on page 3-126*.
3. Remove the left side underbody front air deflector. Refer to *Underbody Front Air Deflector Replacement - Left Side on page 3-127*.
4. Remove the right side underbody front air deflector. Refer to *Underbody Front Air Deflector Replacement - Right Side on page 3-128*.
5. Remove the front and rear underbody rear air deflector. Refer to *Underbody Rear Air Rear Deflector Replacement (Rear) on page 3-129* or *Underbody Rear Air Rear Deflector Replacement (Front) on page 3-130*.
6. Drain the drive motor battery cooling system. Refer to *Drive Motor Battery Cooling System Draining and Filling on page 9-257*.
7. Remove the rear axle. Refer to *Rear Axle Replacement on page 15-24*.
8. Remove the drive motor battery coolant inlet pipe. Refer to *Drive Motor Battery Coolant Inlet Pipe Replacement (Inlet Pipe) on page 9-324* or *Drive Motor Battery Coolant Inlet Pipe Replacement (Outlet Pipe) on page 9-325* or *Drive Motor Battery Coolant Inlet Pipe Replacement (Long One) on page 9-327*.
9. Remove the drive motor battery coolant cooler outlet pipe. Refer to *Drive Motor Battery Coolant Inlet Pipe Replacement (Inlet Pipe) on page 9-324* or *Drive Motor Battery Coolant Inlet Pipe Replacement (Outlet Pipe) on page 9-325* or *Drive Motor Battery Coolant Inlet Pipe Replacement (Long One) on page 9-327*.

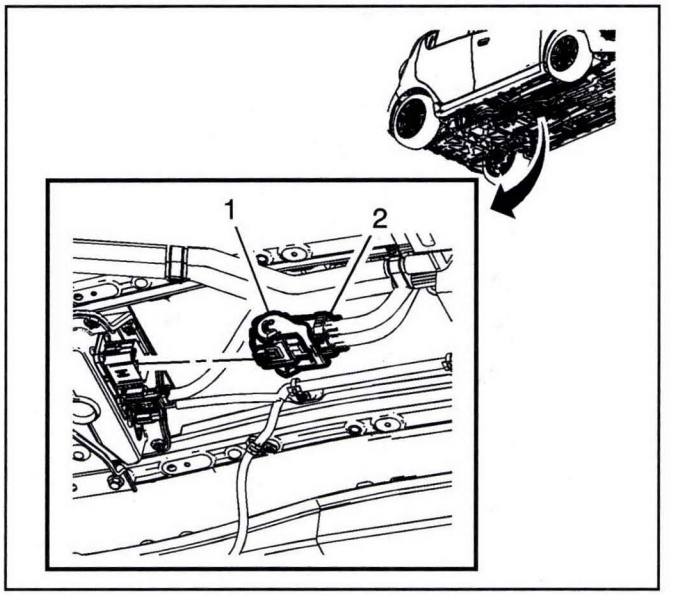

3232197

10. Disconnect the 300 volt battery positive and negative cable connector (2), from the drive motor battery, by sliding the connector handle (1) rearward.

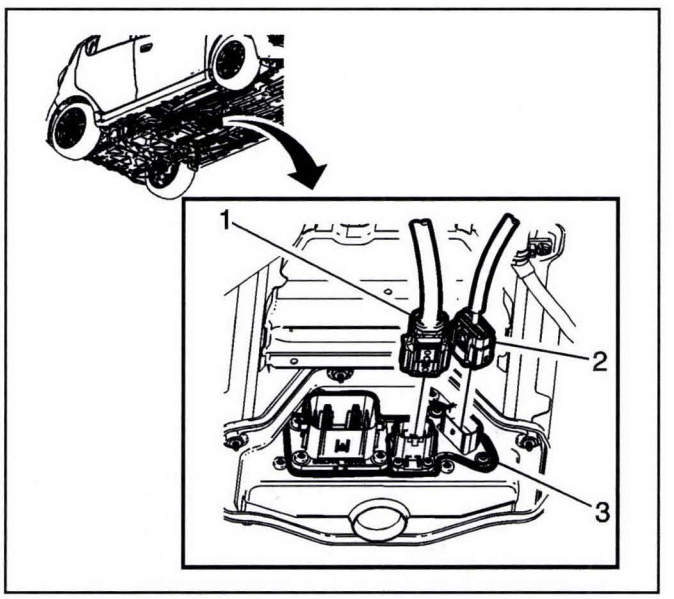

3232193

11. Disconnect the battery charger cable connector (1) and the body harness connector (2), from the drive motor battery (3).

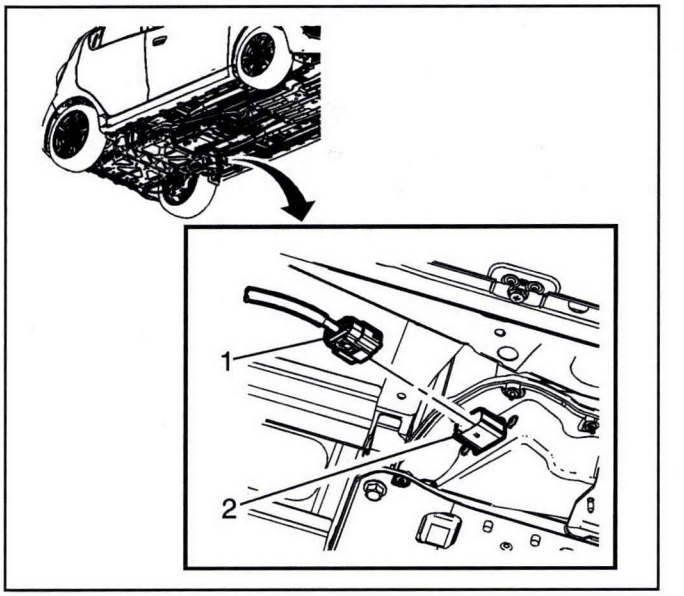

3232191

12. Disconnect the body harness connector (1) from the left front side of the drive motor battery.

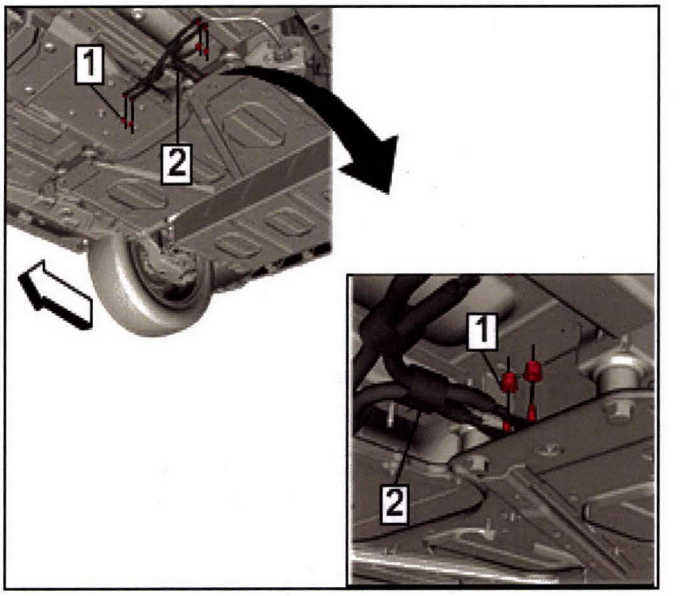

3232177

13. Remove the battery negative cable extension fasteners (1) and remove the battery negative cable extension (2), connecting the drive motor battery to the chassis frame.

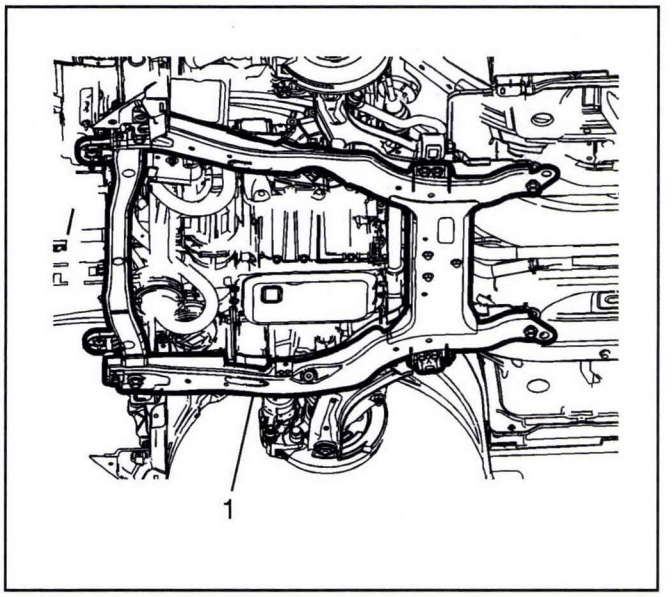

3471779

14. During drive motor battery removal, vehicle weight will be redistributed and may cause the vehicle to become unstable on the hoist. To avoid this condition position a suitable supporter under the frame (1).

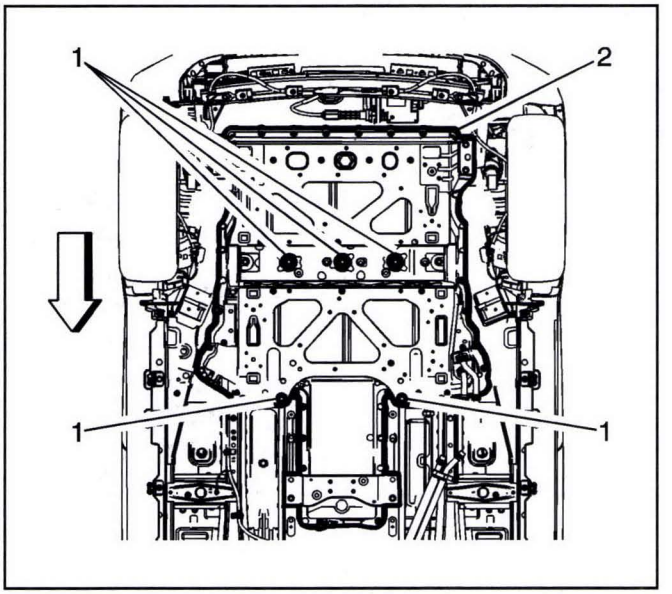

3242132

15. Remove the inside drive motor battery mounting fasteners (1).

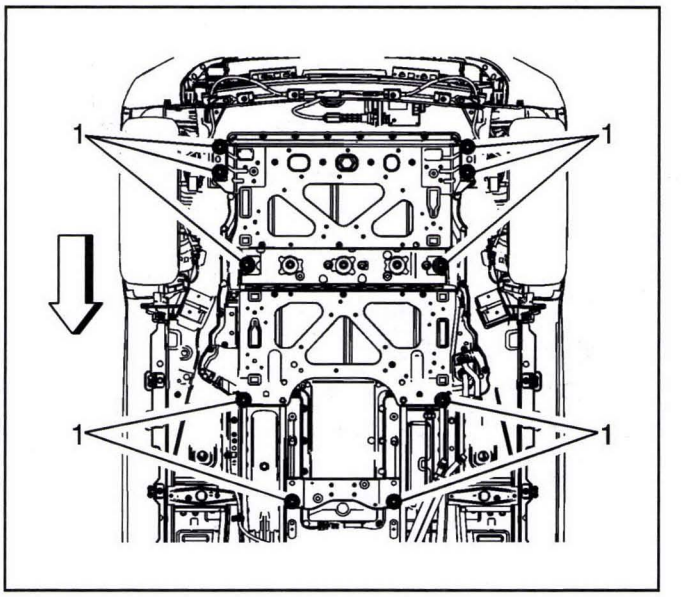

3242135

16. Position a *OTC-1585A* battery lift table or equivalent that can support 500 kg and raise the battery lift table into position.

    Note: Verify ALL connectors are removed from the drive motor battery.

    Note: Ensure all fasteners are removed before lowering the support table fixture with the drive motor battery.

17. Remove the remaining drive motor battery mounting fasteners (1).

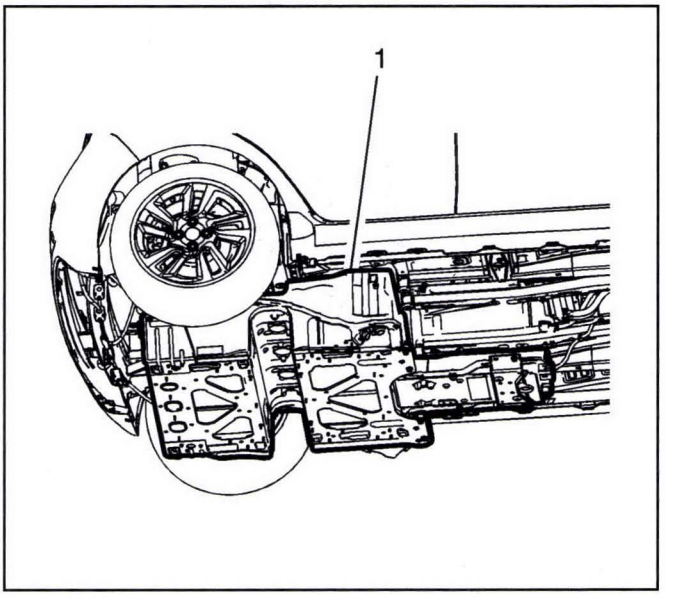

3242256

18. Slowly lower the *OTC-1585A* battery lift table or equivalent table that can support 500 kg with the drive motor battery (1).
19. Use the *EL-50971* battery lifting straps to put the drive motor battery onto the *OTC-1585A* battery lift table.

Note: Make sure the drive motor battery is balanced when hung from the lifting straps before moving with a crane or chain block to a support table.

Note: As part of the battery removal process, all coolant should be drained from the battery pack.

Note: If internal repairs are being performed on the battery, all coolant should be drained from the battery pack to ensure coolant does not drain from the hoses during repairs.

20. Install 2 coolant plugs into the coolant lines. Coolant plugs can be removed from the NEW service battery assembly and installed in the returned battery. Additional coolant plugs (GM p/n 22770854) can be ordered if they are needed.

Installation Procedure

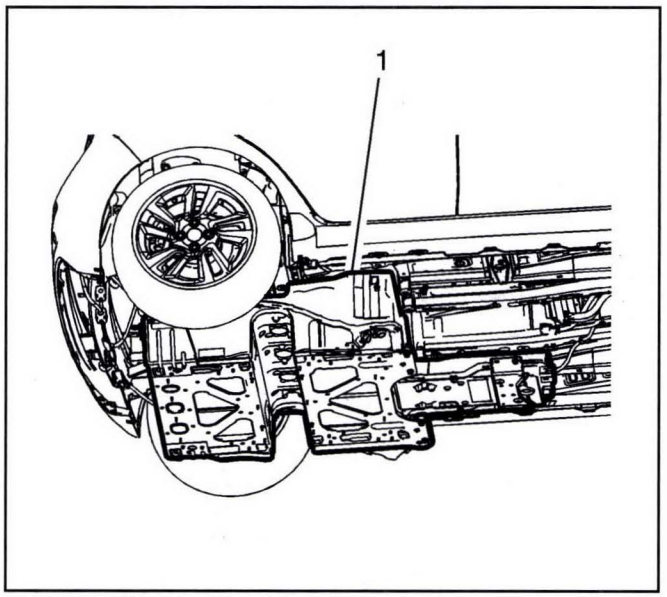

3242256

Note: Avoid making contact with the front of the drive motor battery (1) with the body.

Note: Positioning holes are located at the front of the drive motor battery assembly. Use a punch or alignment tool to properly position the battery to body during installation.

1. With the drive motor battery on the *OTC-1585A* battery lift table or equivalent, slowly raise the *OTC-1585A* battery lift table or equivalent, and the drive motor battery using a punch or alignment tool to get the drive motor battery into position.

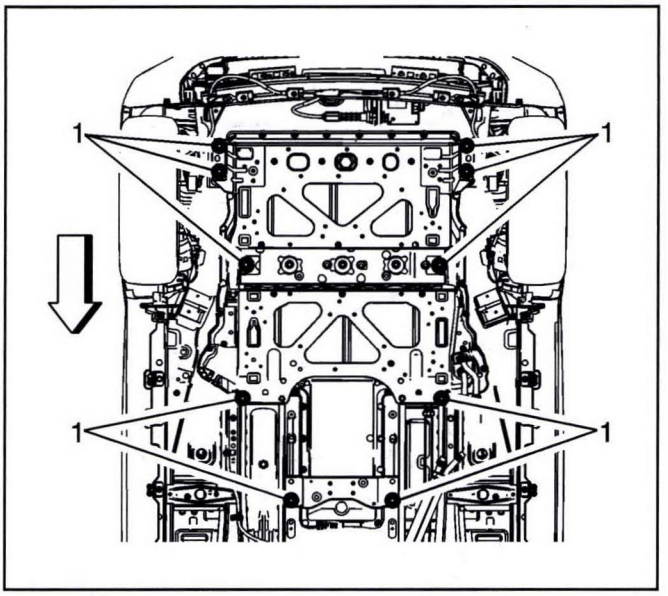

3242135

2. Loosely tighten the outside mounting fasteners (1).

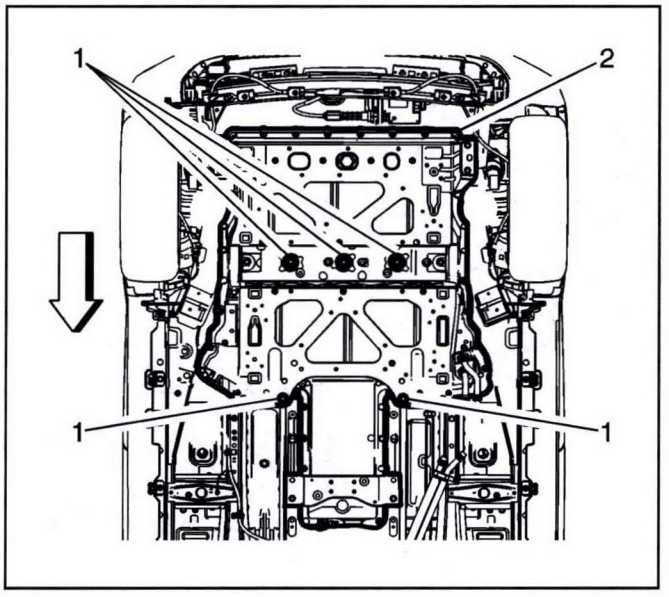

3242132

3. Lower the *OTC-1585A* battery lift table or equivalent, that can support over 500 kg and loosely tighten the inside fasteners (1).

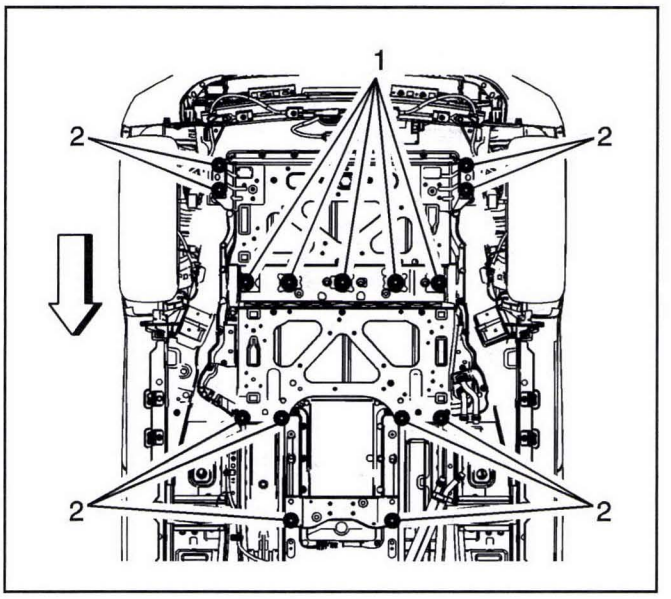

3242311

Caution: Refer to *Fastener Caution on page 0-8*.

4. Tighten the fasteners (1) to **56** N•m **(41 lb ft)**.
5. Tighten the fasteners (2) to **56** N•m **(41 lb ft)**.

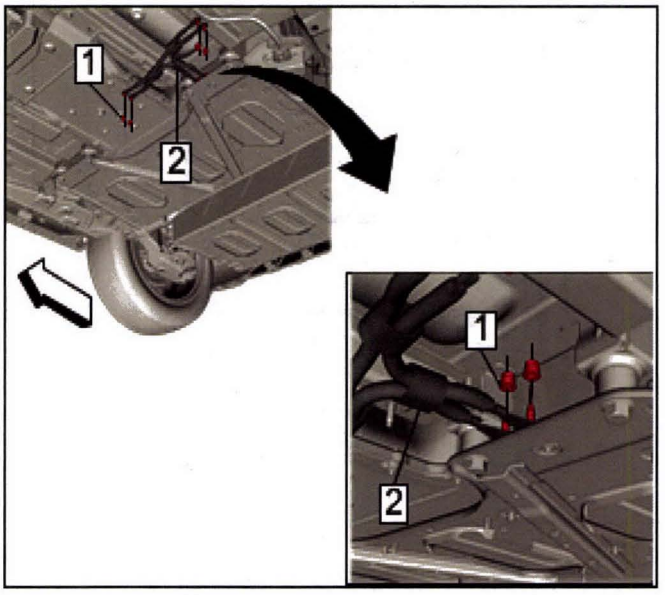

3232177

6. Install the battery negative cable extension (2) to the drive motor battery and frame. Tighten the fasteners (1) to **9** N•m **(80 lb in)**.

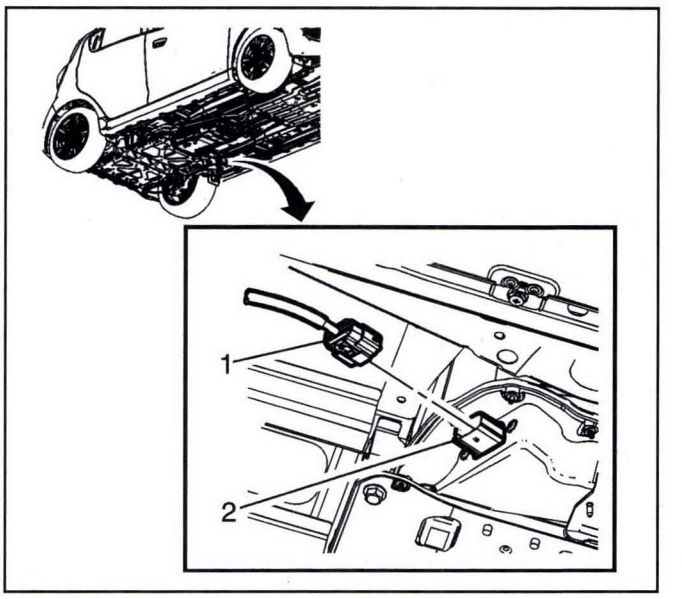

3232191

7. Connect the body harness connector (1) to the left front side of the drive motor battery (2).

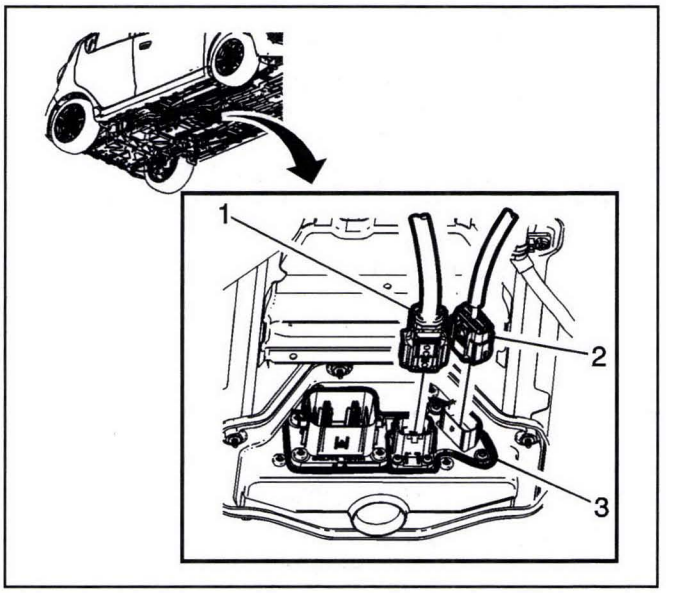

3232193

8. Connect the battery charger cable connector (1) and the body harness connector (2), to the drive motor battery (3).

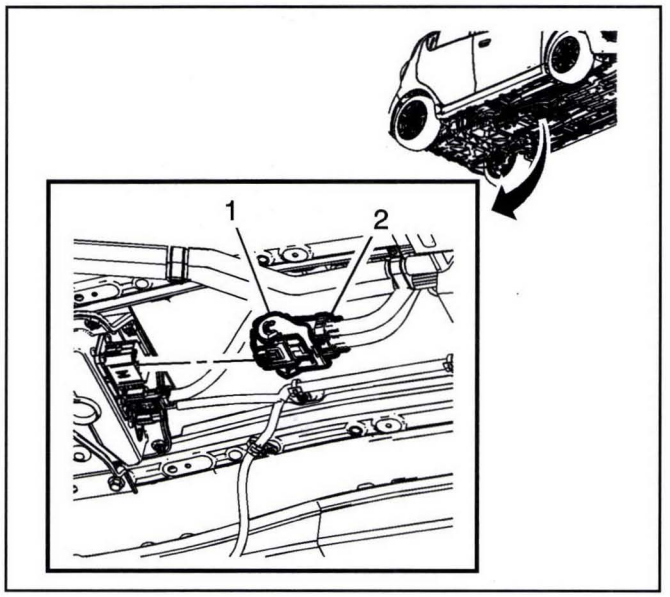

3232197

9. Connect the 300 volt battery positive and negative cable connector (2), to the drive motor battery.

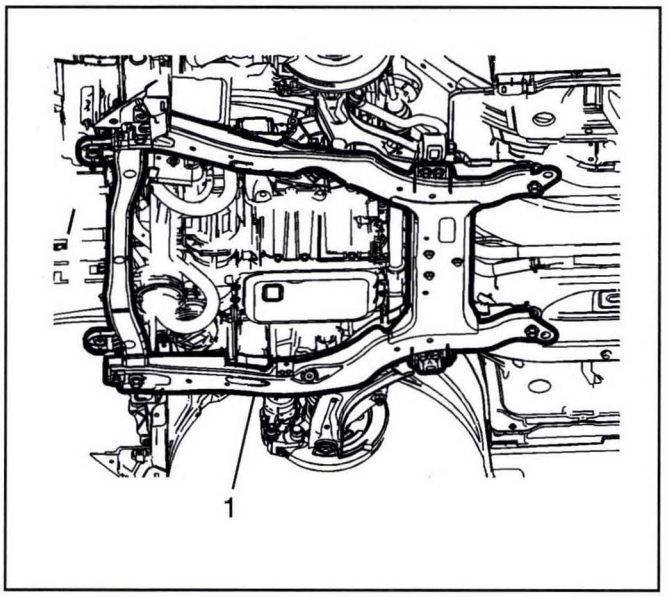

3471779

10. Remove the hydraulic support from under the frame (1).
11. Install the drive motor battery coolant cooler outlet pipe. Refer to *Drive Motor Battery Coolant Inlet Pipe Replacement (Inlet Pipe) on page 9-324* or *Drive Motor Battery Coolant Inlet Pipe Replacement (Outlet Pipe) on page 9-325* or *Drive Motor Battery Coolant Inlet Pipe Replacement (Long One) on page 9-327*.
12. Install the drive motor battery coolant inlet pipe. Refer to *Drive Motor Battery Coolant Inlet Pipe Replacement (Inlet Pipe) on page 9-324* or *Drive Motor Battery Coolant Inlet Pipe Replacement (Outlet Pipe) on page 9-325* or *Drive Motor Battery Coolant Inlet Pipe Replacement (Long One) on page 9-327*.
13. Fill the drive motor battery cooling system. Refer to *Drive Motor Battery Cooling System Draining and Filling on page 9-257*.
14. Install the rear axle. Refer to *Rear Axle Replacement on page 15-24*.
15. Install the front and rear underbody rear air deflector. Refer to *Underbody Rear Air Rear Deflector Replacement (Rear) on page 3-129* or *Underbody Rear Air Rear Deflector Replacement (Front) on page 3-130*.
16. Install the right side underbody front air deflector. Refer to *Underbody Front Air Deflector Replacement - Right Side on page 3-128*.
17. Install the left side underbody front air deflector. Refer to *Underbody Front Air Deflector Replacement - Left Side on page 3-127*.
18. Install the underbody front air deflector. Refer to *Underbody Front Air Deflector Replacement (Center) on page 3-126*.
19. Enable the high voltage system. Refer to *High Voltage Enabling on page 9-367*.
20. Program the battery energy control module. Refer to *Control Module References on page 6-3*.
21. If required, perform the battery Hybrid/EV battery pack capacity learn procedure. Refer to *Hybrid/EV Battery Pack Capacity Learn on page 9-541*.

    Note: Refer to Diagnostic Aids to determine when, if required procedure should be performed.
22. With a scan tool, select Hybrid/EV Powertrain Control Module 2 Configuration/Reset Functions. Perform the Learn Functions - Hybrid/EV Battery Pack Charging Adaptive Learn Reset and follow the on-screen instructions.
23. If the battery was replaced, fully charge the battery to set the initial vehicle range. This range will adjust as the battery is charged and discharged through normal operation.

Auxiliary Battery Wiring Harness Replacement (High Voltage Connector X2)

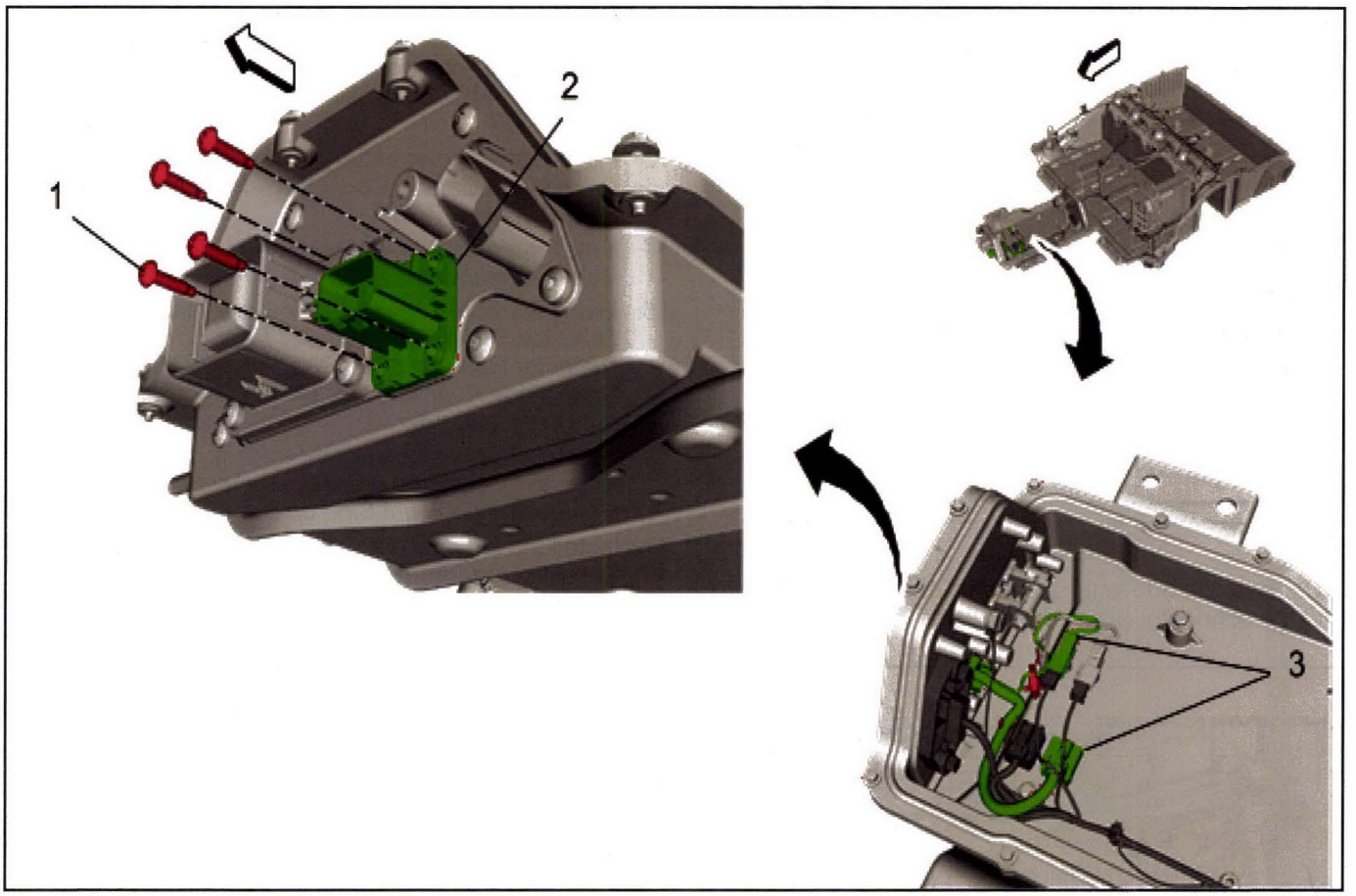

3723936

Auxiliary Battery Wiring Harness Replacement (High Voltage Connector X2)

Callout	Component Name
Danger: Ensure all High Voltage safety procedures are followed. Failure to follow the procedure exactly as written may result in serious injury or death. ***Danger: Before working on any high voltage system, be sure to wear the following Personal Protection Equipment:*** • ***Safety glasses with appropriate side shields when within 50 feet of the vehicle, either indoors or outdoors*** • ***Certified and up-to-date Class "0" Insulation gloves rated at 1000V with leather protectors*** – ***Visually and functionally inspect the gloves before use.*** – ***Wear the Insulation gloves at all times when working with the high voltage battery assembly, whether the system is energized or not.*** ***Failure to follow the procedure exactly as written may result in serious injury or death.*** **Preliminary Procedure** 1. Remove the drive motor battery. Refer to *Drive Motor Battery Replacement and Shipping Preparation on page 9-524*. 2. Remove the drive motor battery cover. Refer to *Drive Motor Battery Cover Replacement on page 9-449*.	
1	High Voltage Connector X2 Fasteners (Qty: 4) **Caution:** Refer to *Fastener Caution on page 0-8*. **Tighten:** 9 N•m (80 lb in)
2	High Voltage Connector X2
3	Auxiliary Battery Wiring Harness

Auxiliary Battery Wiring Harness Replacement (Connector X1)

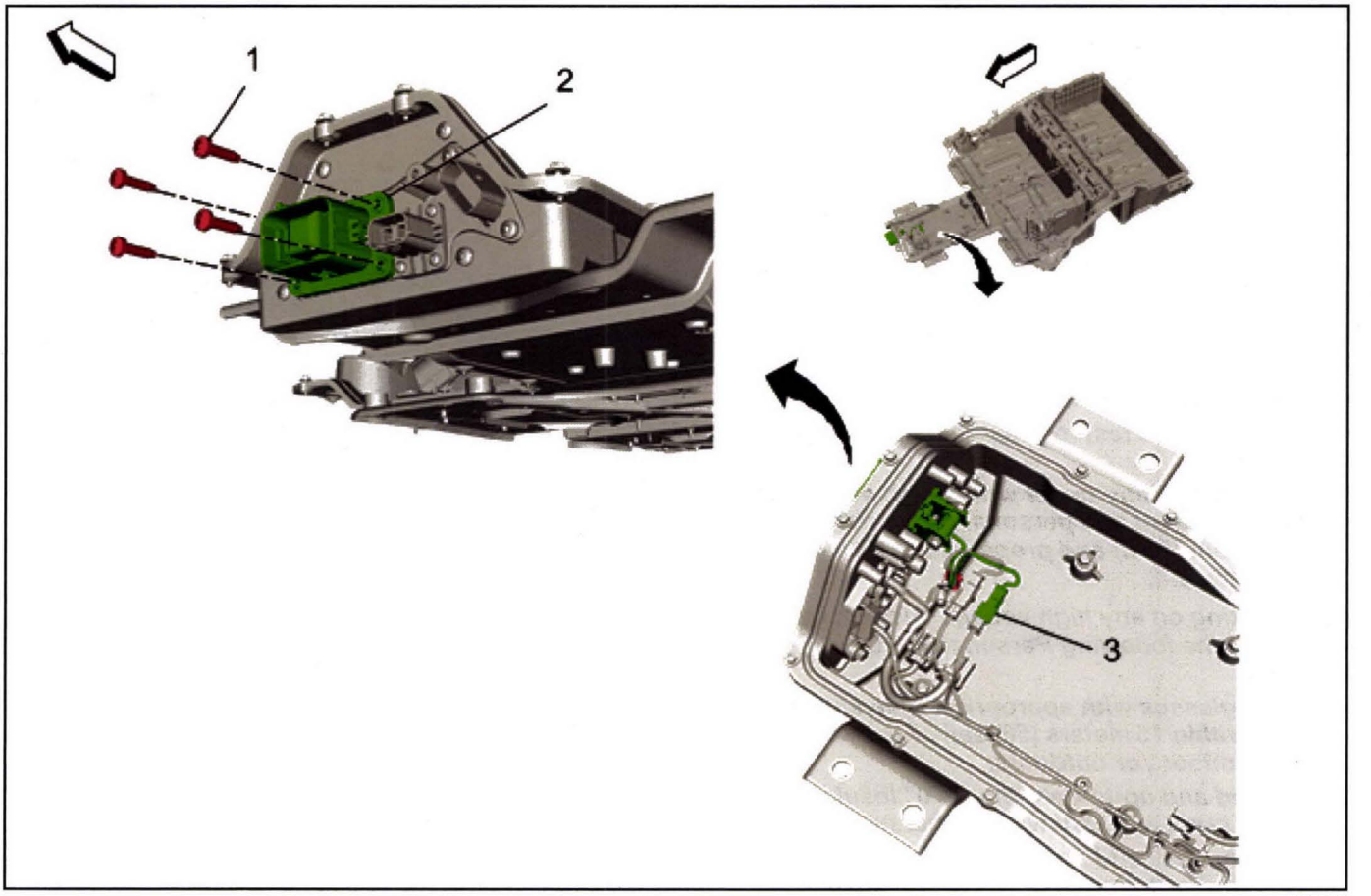

3723938

Auxiliary Battery Wiring Harness Replacement (Connector X1)

Callout	Component Name
Danger: Ensure all High Voltage safety procedures are followed. Failure to follow the procedure exactly as written may result in serious injury or death. ***Danger: Before working on any high voltage system, be sure to wear the following Personal Protection Equipment:*** • ***Safety glasses with appropriate side shields when within 50 feet of the vehicle, either indoors or outdoors*** • ***Certified and up-to-date Class "0" Insulation gloves rated at 1000V with leather protectors*** – ***Visually and functionally inspect the gloves before use.*** – ***Wear the Insulation gloves at all times when working with the high voltage battery assembly, whether the system is energized or not.*** ***Failure to follow the procedure exactly as written may result in serious injury or death.*** **Preliminary Procedure** 1. Remove the drive motor battery. Refer to *Drive Motor Battery Replacement and Shipping Preparation on page 9-524*. 2. Remove the drive motor battery cover. Refer to *Drive Motor Battery Cover Replacement on page 9-449*. 3. Remove the drive motor contactor relay high voltage bus bar from the X1 Connector. Refer to *Battery Cable Replacement (Drive Motor Generator Power Inverter Module to Frame Rail) on page 9-515* or *Battery Cable Replacement (APM Module to Frame Rail) on page 9-516* or *Battery Cable Replacement (Drive Motor Contactor Relay High Voltage Bus Bar) on page 9-517* or *Battery Cable Replacement (Battery Cell High Voltage Cables) on page 9-521*.	
1	Connector X1 Fasteners (Qty: 4) **Caution:** Refer to *Fastener Caution on page 0-8*. **Tighten:** 9 N•m (80 lb in)
2	Connector X1
3	Auxiliary Battery Wiring Harness

Auxiliary Battery Wiring Harness Replacement (Battery Cell Temperature Sensors, Current Sensor, X357, X358)

Removal Procedure

Danger: Always perform the High Voltage Disabling procedure prior to servicing any High Voltage component or connection. Personal Protection Equipment (PPE) and proper procedures must be followed.

The High Voltage Disabling procedure includes the following steps:

- ***Identify how to disable high voltage.***
- ***Identify how to test for the presence of high voltage.***
- ***Identify condition under which high voltage is always present and personal protection equipment (PPE) and proper procedures must be followed.***

Before working on any high voltage system, be sure to wear the following Personal Protection Equipment:

- ***Safety glasses with appropriate side shields when within 15 meters (50 feet) of the vehicle, either indoors or outdoors.***
- ***Certified and up-to-date Class "0" Insulation gloves rated at 1000V with leather protectors.***
  - ***Visually and functionally inspect the gloves before use.***
  - ***Wear the Insulation gloves with leather protectors at all times when working with the high voltage battery assembly, whether the system is energized or not.***

Failure to follow the procedures may result in serious injury or death.

1. Remove the drive motor battery. Refer to *Drive Motor Battery Replacement and Shipping Preparation on page 9-524*.
2. Remove the drive motor battery cover. Refer to *Drive Motor Battery Cover Replacement on page 9-449*.
3. Remove the cell battery cooling manifold outlet hose. Refer to *High Voltage Battery Cooling Manifold Outlet Hose Replacement (Coolant to all Battery Cells) on page 9-339* or *High Voltage Battery Cooling Manifold Outlet Hose Replacement (Individual Battery Cell Coolant Outlet Hose) on page 9-342*.
4. Remove the cell battery cooling manifold inlet hose. Refer to *High Voltage Battery Cooling Manifold Inlet Hose Replacement (Coolant to all Battery Cells) on page 9-336* or *High Voltage Battery Cooling Manifold Inlet Hose Replacement (Individual Battery Cell Coolant Inlet Hose) on page 9-338*.

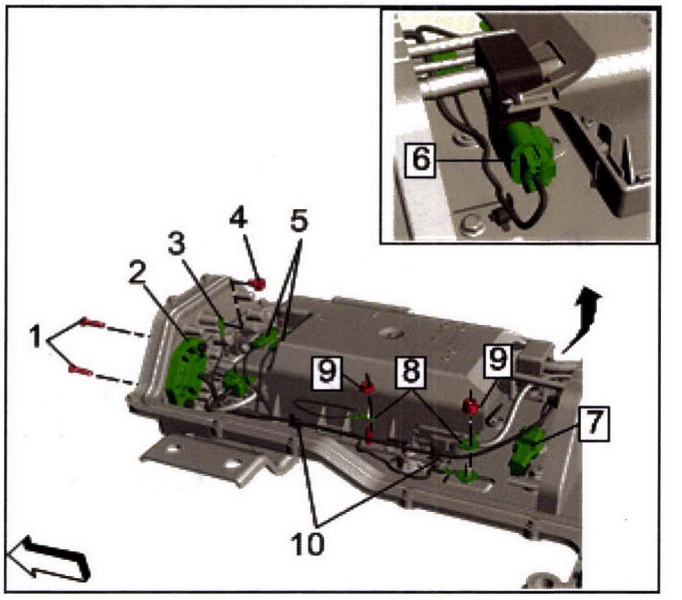

3947799

5. Remove the fasteners (1) to the X357 connector (2).
6. Remove the fastener (4) and the auxiliary battery wiring harness ground terminal (3).
7. Remove the fasteners (9) and the auxiliary battery wiring harness ground terminals (8).
8. Disconnect connectors (5, 6, 7 and 11).
9. Detach the auxiliary battery wiring harness retainers (10).

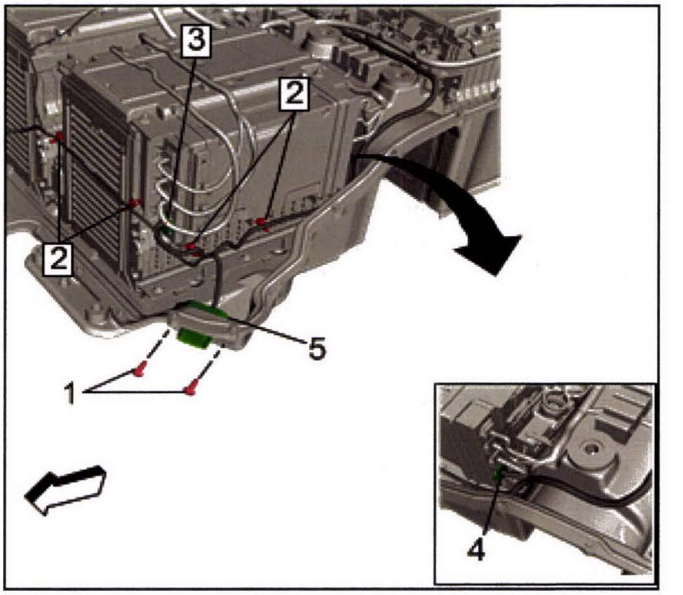

3947803

10. Remove the fasteners (1) to the X358 connector (5).
11. Disconnect connector (3) and connector (4) from the battery energy control module.
12. Detach the auxiliary battery wiring harness retainers (2).

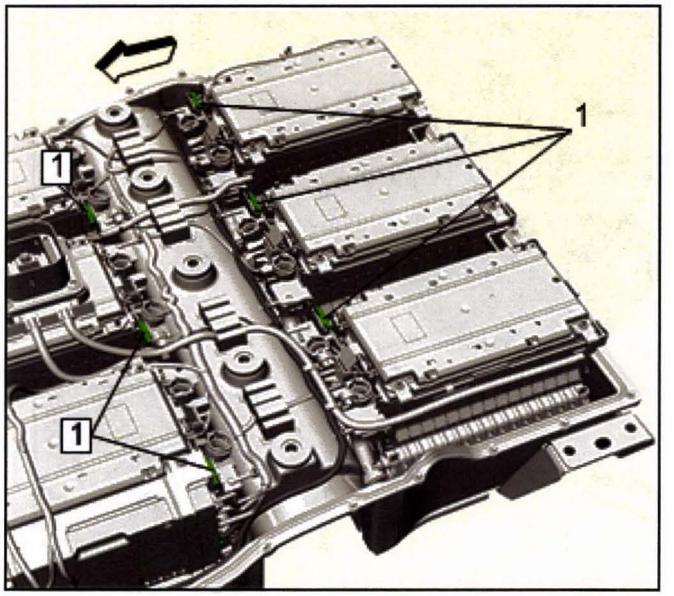

3947808

13. Disconnect the battery cell temperature sensor connectors (1).

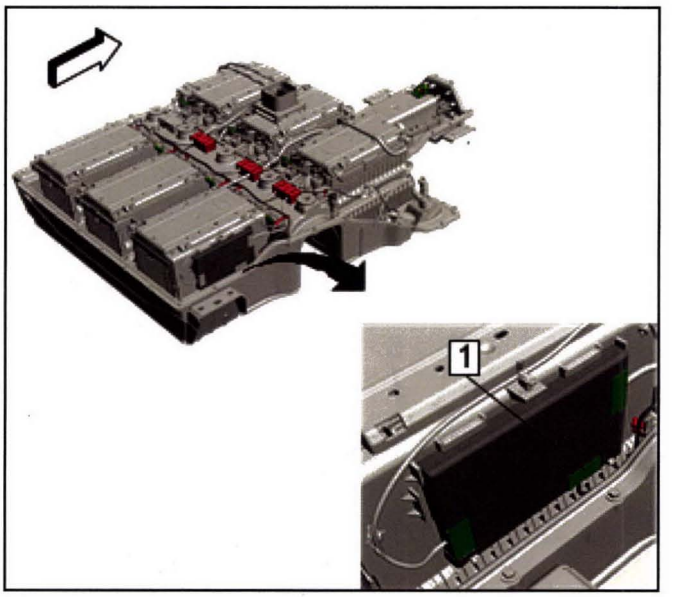

3947811

14. Remove the connector (1) to the battery interface control module (3). Refer to *High Voltage Battery Interface Control Module Replacement on page 9-512*.
15. Detach the harness retainer attached to the module bracket.

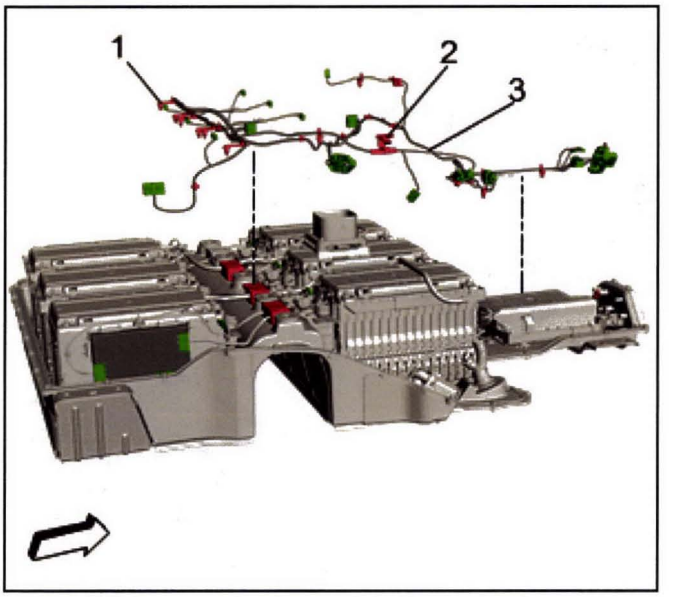

3947812

17. Detach the remaining harness retainers (1) and the harness clip (2).

    Note: Note the routing of the harness within the drive motor battery.
18. Remove the auxiliary battery wiring harness (3) from the drive motor battery.

Installation Procedure

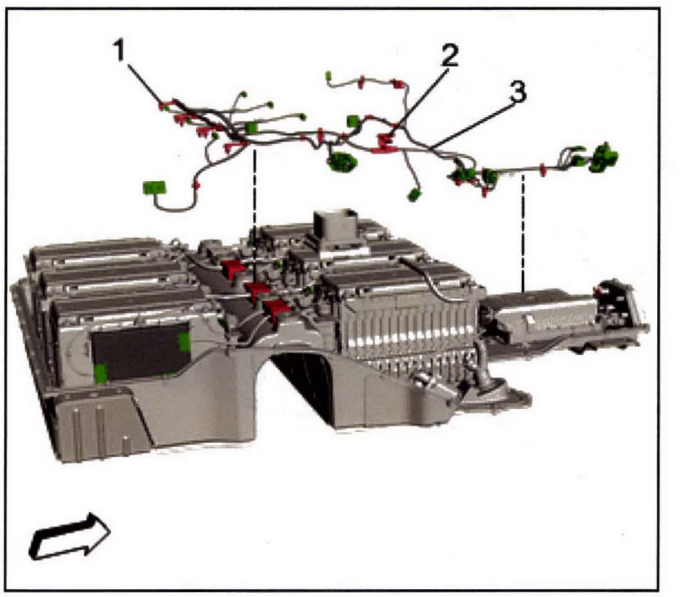

3947812

1. Install the auxiliary battery wiring harness (3) into position with the retainers (1) and harness clip (2).

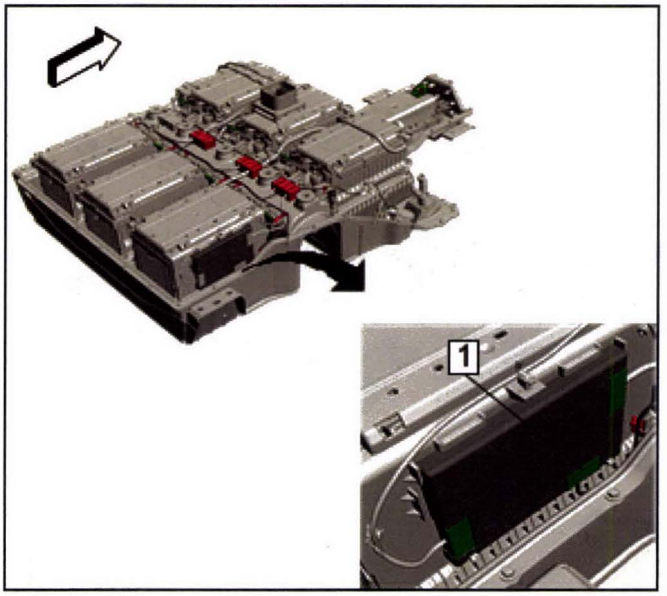

3947811

2. Connect the auxiliary battery wiring harness connector (1) into the battery interface control module.
3. Attach the harness retainer to the bracket.

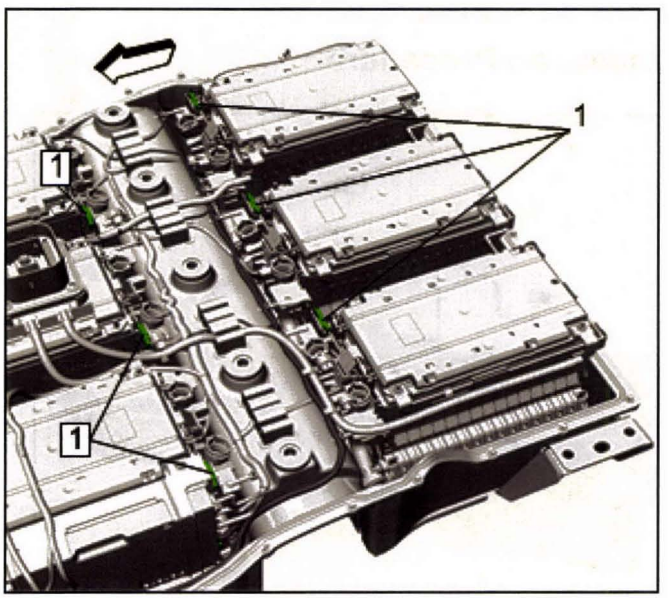

3947808

4. Connect the auxiliary battery wiring harness connectors (1) to the battery cell temperature sensor connectors.

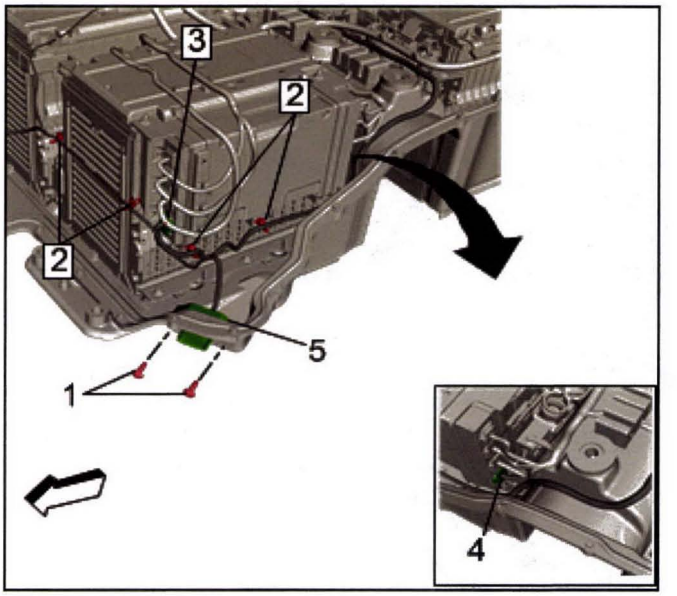

3947803

Caution: Refer to *Fastener Caution on page 0-8*.

5. Install the X358 connector (5) and tighten the fasteners (1) to **6** N•m **(53 lb in)**.
6. Connect the battery energy control module connectors 3 and 4.
7. Attach the harness retainers (2).

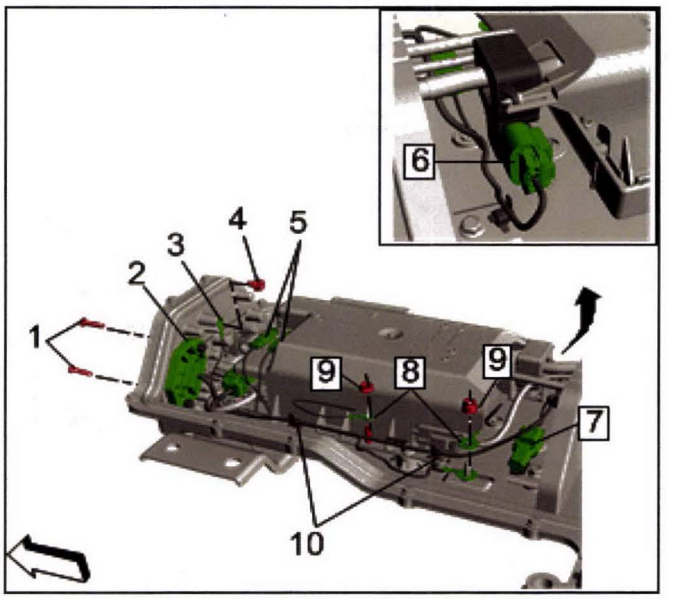

3947799

8. Install the X357 connector (2) and tighten the fasteners (1) to **9** N•m **(80 lb in)**.
9. Install the harness ground terminal (3) and tighten the fastener (4) to **4.5** N•m **(40 lb in)**.
10. Install the harness ground terminals (8) and tighten the fasteners (9) to **4.5** N•m **(40 lb in)**.
11. Connect the connectors (5, 6, 7 and 11) and attach the harness retainers (10).

12. Install the cell battery cooling manifold inlet hose. Refer to *High Voltage Battery Cooling Manifold Inlet Hose Replacement (Coolant to all Battery Cells) on page 9-336* or *High Voltage Battery Cooling Manifold Inlet Hose Replacement (Individual Battery Cell Coolant Inlet Hose) on page 9-338*.
13. Install the cell battery cooling manifold outlet hose. Refer to *High Voltage Battery Cooling Manifold Outlet Hose Replacement (Coolant to all Battery Cells) on page 9-339* or *High Voltage Battery Cooling Manifold Outlet Hose Replacement (Individual Battery Cell Coolant Outlet Hose) on page 9-342*.
14. Install the drive motor battery cover. Refer to *Drive Motor Battery Cover Replacement on page 9-449*.
15. Install the drive motor battery. Refer to *Drive Motor Battery Replacement and Shipping Preparation on page 9-524*.

Auxiliary Battery Wiring Harness Replacement (Battery Cell Connectors, Battery Energy Control Module, Battery Interface Control Module)

Removal Procedure

Danger: Always perform the High Voltage Disabling procedure prior to servicing any High Voltage component or connection. Personal Protection Equipment (PPE) and proper procedures must be followed.

The High Voltage Disabling procedure includes the following steps:

- ***Identify how to disable high voltage.***
- ***Identify how to test for the presence of high voltage.***
- ***Identify condition under which high voltage is always present and personal protection equipment (PPE) and proper procedures must be followed.***

Before working on any high voltage system, be sure to wear the following Personal Protection Equipment:

- ***Safety glasses with appropriate side shields when within 15 meters (50 feet) of the vehicle, either indoors or outdoors.***
- ***Certified and up-to-date Class "0" Insulation gloves rated at 1000V with leather protectors.***
  - ***Visually and functionally inspect the gloves before use.***
  - ***Wear the Insulation gloves with leather protectors at all times when working with the high voltage battery assembly, whether the system is energized or not.***

Failure to follow the procedures may result in serious injury or death.

1. Remove the drive motor battery. Refer to *Drive Motor Battery Replacement and Shipping Preparation on page 9-524*.
2. Remove the drive motor battery cover. Refer to *Drive Motor Battery Cover Replacement on page 9-449*.
3. Remove the cell battery cooling manifold outlet hose. Refer to *High Voltage Battery Cooling Manifold Outlet Hose Replacement (Coolant to all Battery Cells) on page 9-339* or *High Voltage Battery Cooling Manifold Outlet Hose Replacement (Individual Battery Cell Coolant Outlet Hose) on page 9-342*.
4. Remove the cell battery cooling manifold inlet hose. Refer to *High Voltage Battery Cooling Manifold Inlet Hose Replacement (Coolant to all Battery Cells) on page 9-336* or *High Voltage Battery Cooling Manifold Inlet Hose Replacement (Individual Battery Cell Coolant Inlet Hose) on page 9-338*.

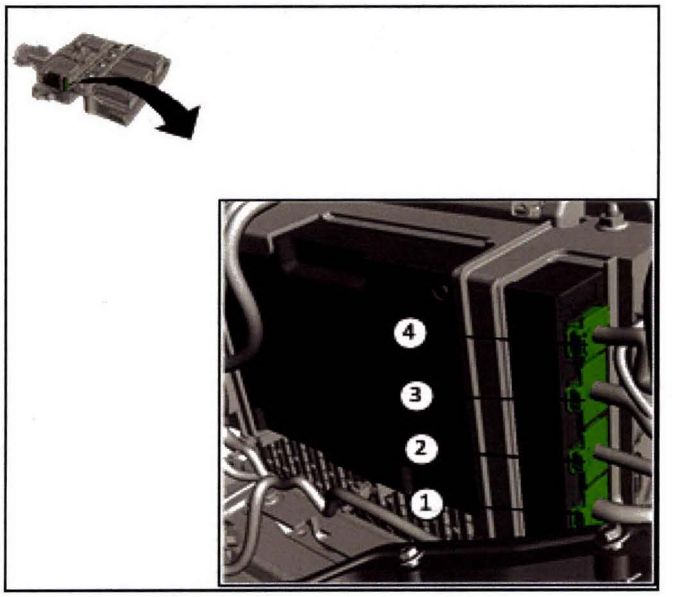

4072888

Note: Damage to the battery energy control module may occur if connector removal sequence to the module is not followed. Battery energy control module connector installation sequence is reverse of the removal sequence and must be performed after all sections have been reconnected.

5. Disconnect the battery energy control module connectors in the sequence shown.

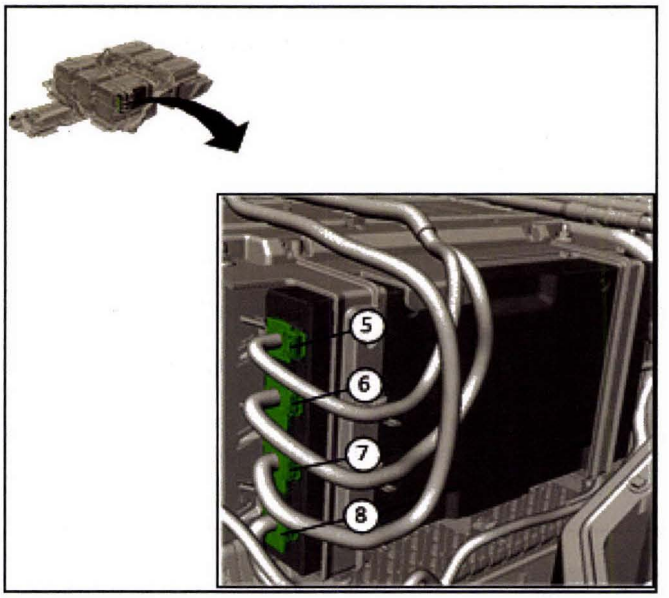

4072891

Note: Damage to the battery energy control module may occur if connector sequence to the module is not followed.

6. Disconnect the battery energy control module connectors in the sequence shown.

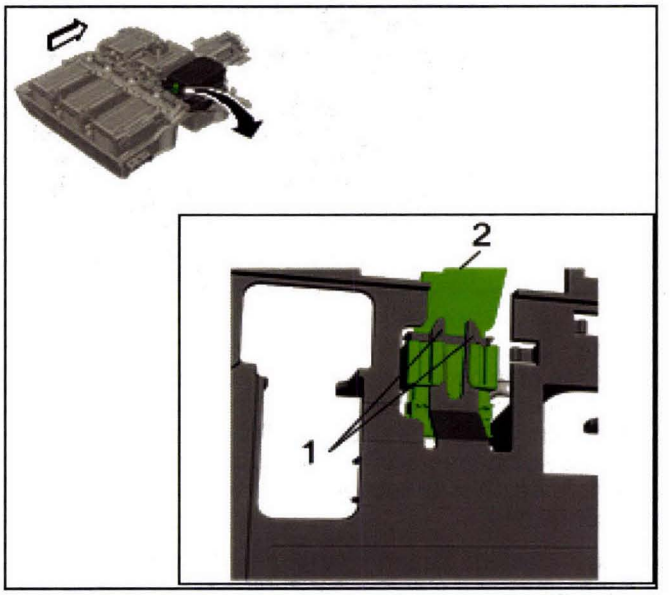

3715436

7. Depress the retaining tabs (1) and reposition the connector being careful not to tear the thin film harness (2).

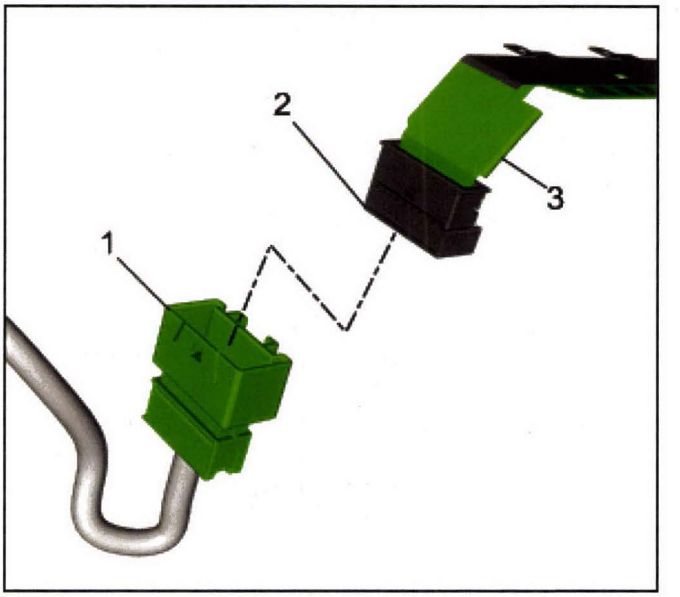

3715437

8. Disconnect the auxiliary battery wiring harness connector (1) from the battery cell connectors (2) being careful not to tear the thin film harness (3).

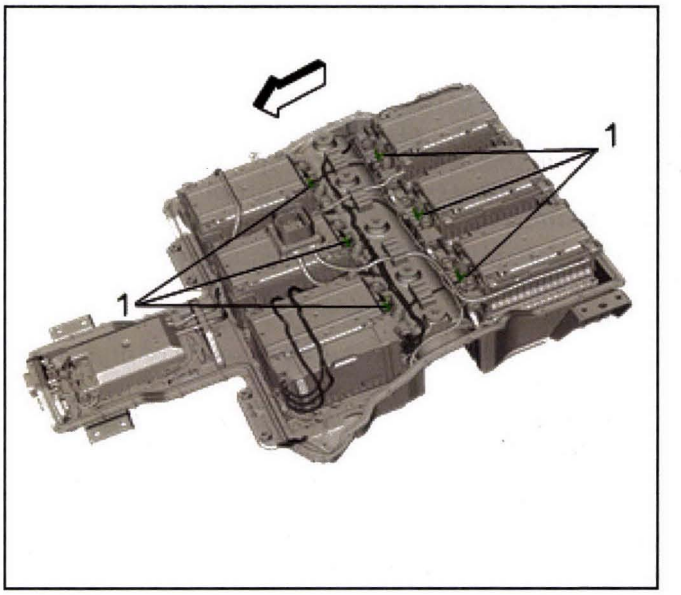

3946932

9. Disconnect the battery cell connectors (1) from all the remaining battery cells.

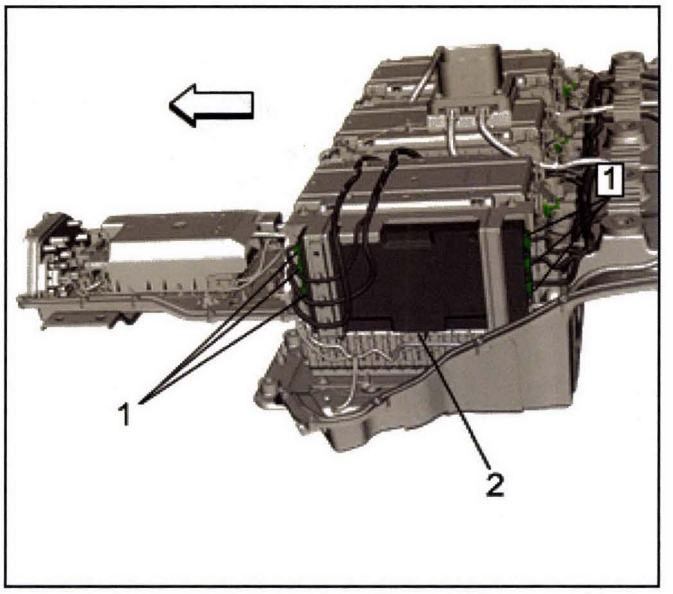

3946933

10. Remove the connectors (1) from the battery energy control module (2). Refer to *Battery Energy Control Module Replacement on page 9-451*.
11. Detach the harness retainers attached to the module bracket.

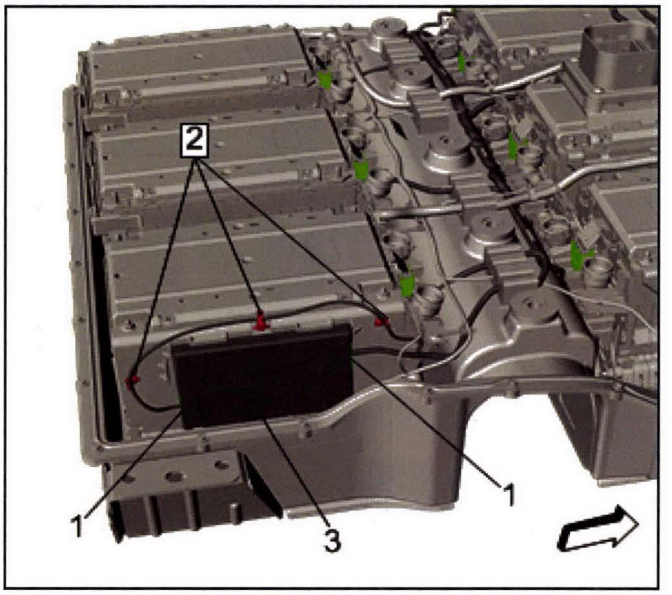

3946934

12. Remove the connectors (1) to the battery interface control module (3). Refer to *High Voltage Battery Interface Control Module Replacement on page 9-512*.
13. Detach the harness retainers (2) attached to the battery interface control module bracket.

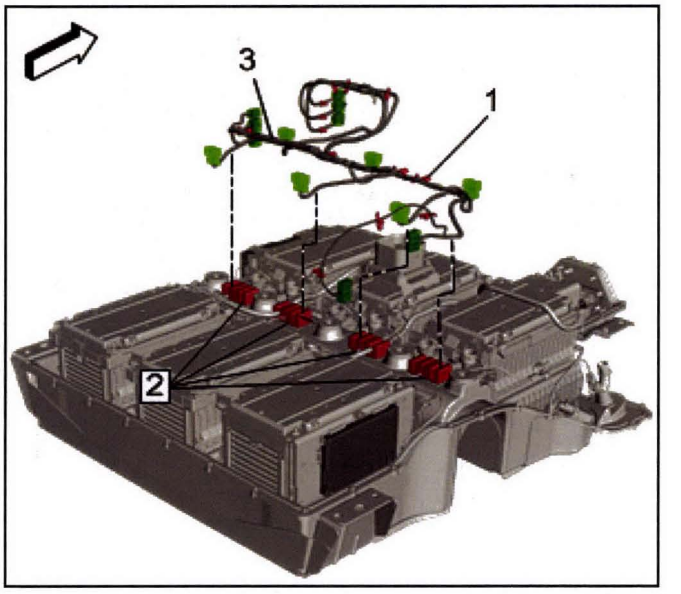

3946935

14. Detach the auxiliary battery wiring harness retainers (1) and remove the auxiliary battery wiring harness (3) from the foam harness retainers (2).

Installation Procedure

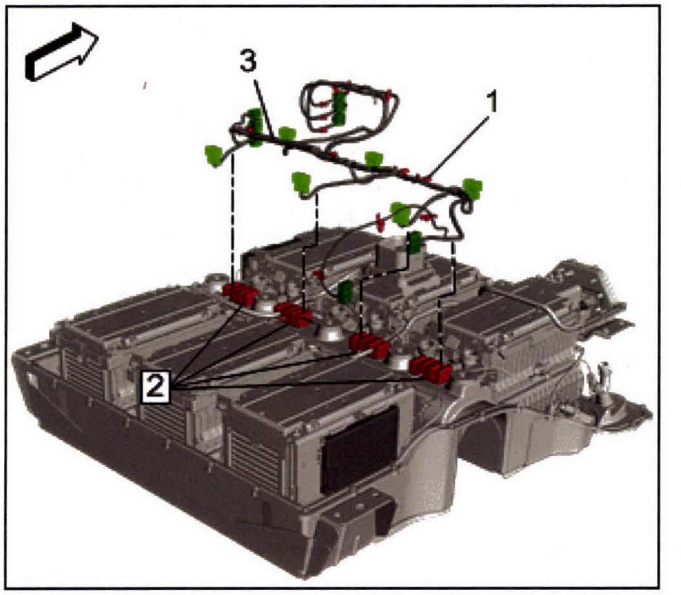

3946935

1. Install the auxiliary battery wiring harness (3) into position with the retainers (1).

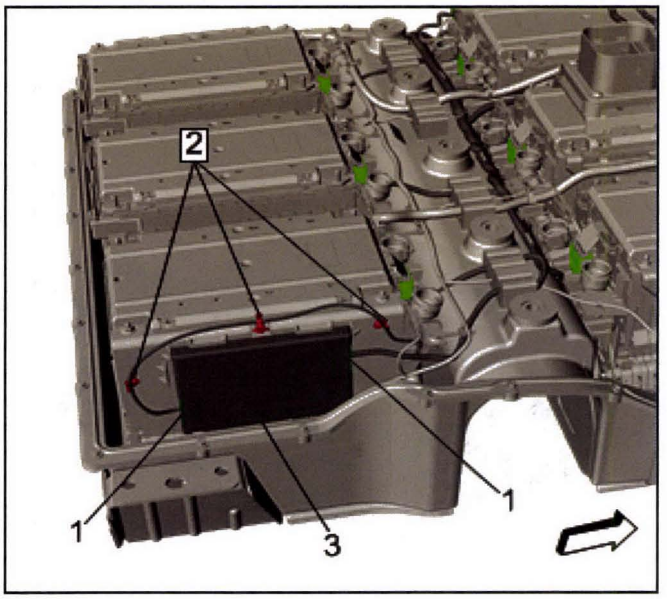

3946934

2. Connect the auxiliary battery wiring harness connectors (1) into the battery interface control module (3).
3. Attach the harness retainers (2) to the bracket.

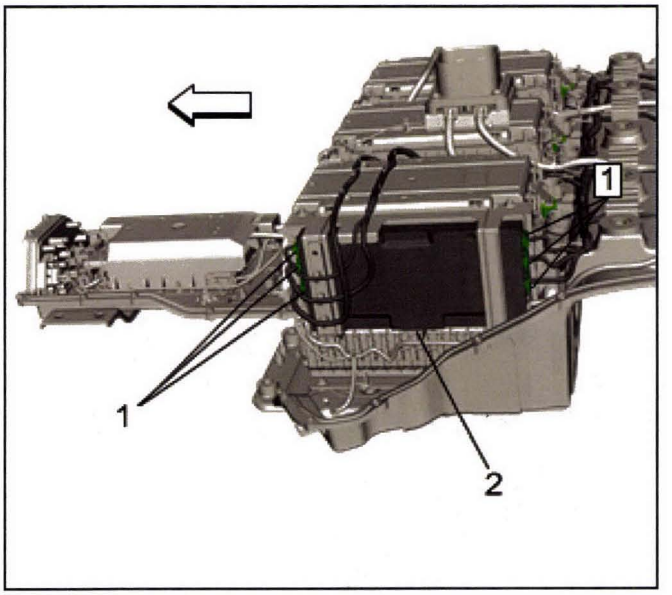

3946933

4. Connect the auxiliary battery wiring harness connectors (1) to the battery energy control module (2).

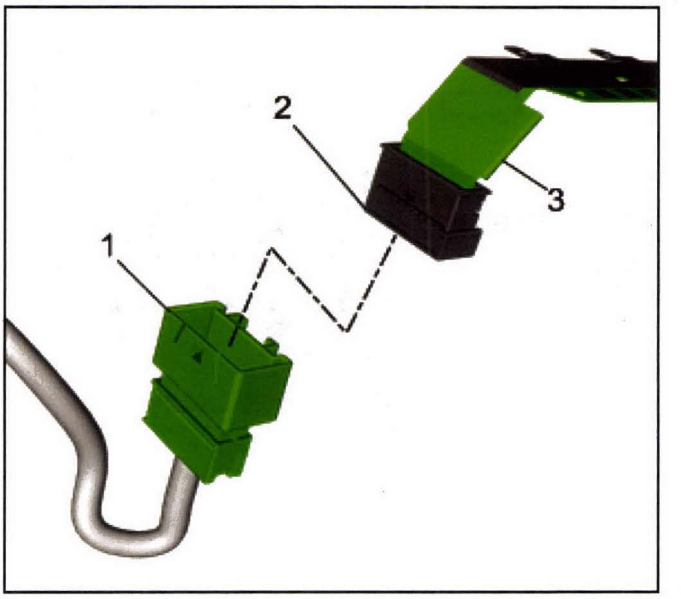

3715437

5. Connect the battery cell connectors (2) to the auxiliary battery wiring harness connector (1) taking care not to tear the film harness (3).

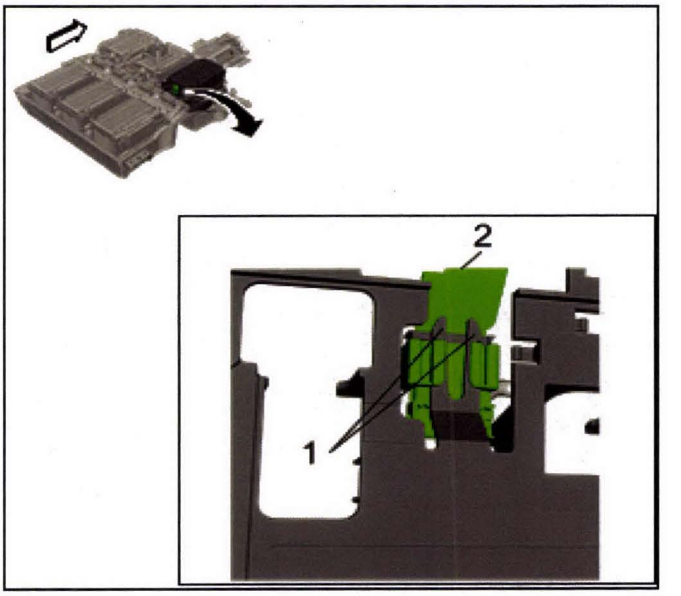

3715436

6. Install the battery cell connector onto the bracket retaining tabs (1).

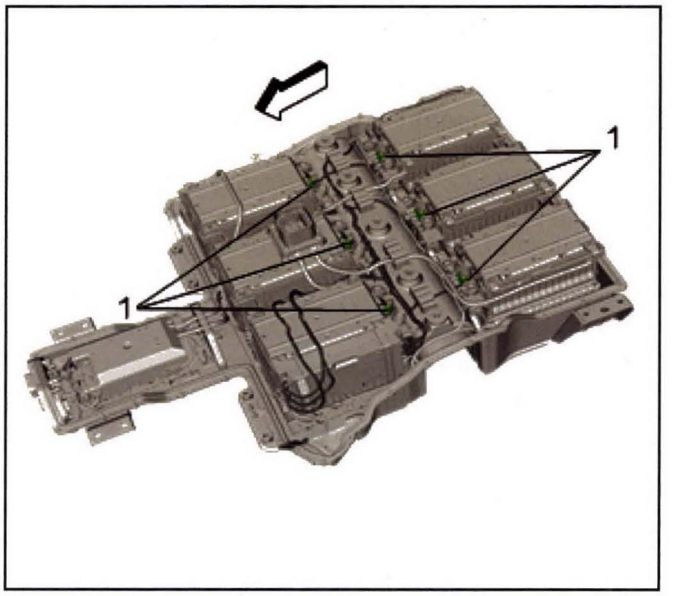

3946932

7. Install the battery cell connectors (1) to the remaining battery cells.

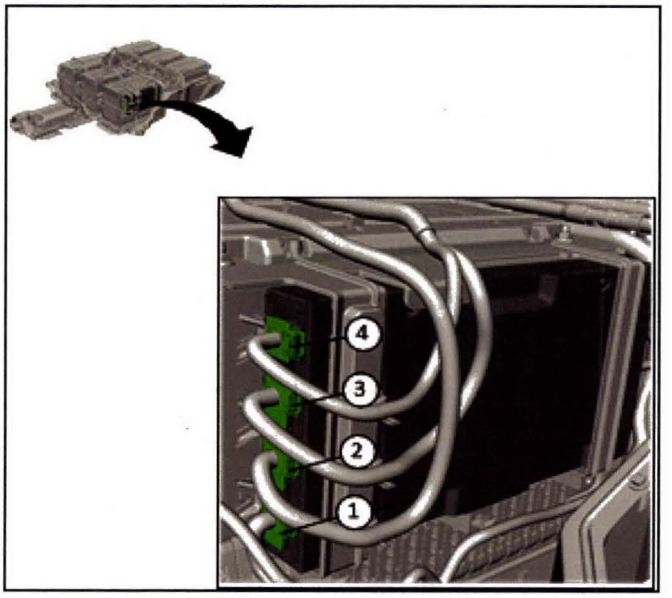

4072893

Note: Damage to the battery energy control module may occur if connector installation sequence to the module is not followed. Battery energy control module connector installation sequence is reverse of the removal sequence and must be performed after all sections have been reconnected.

Note: Damage to the battery energy control module may occur if connector sequence to the module is not followed.

8. Connect the battery energy control module connectors in the sequence shown to the battery energy control module.

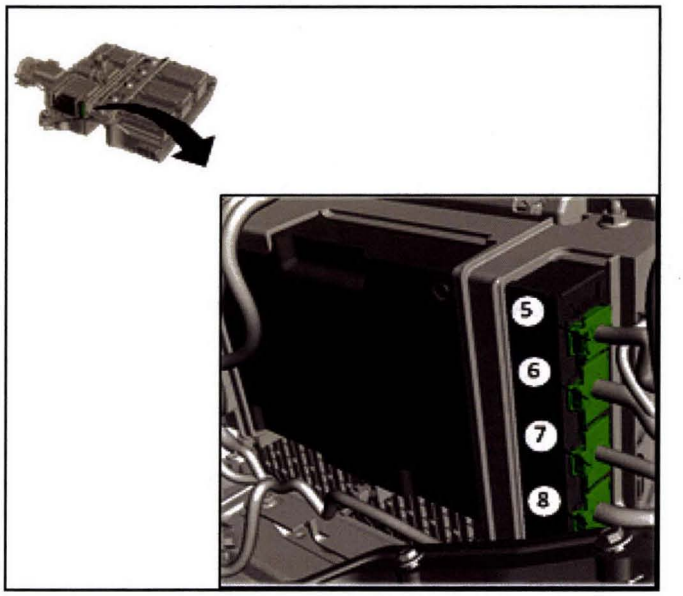

4072895

Note: Damage to the battery energy control module may occur if connector sequence to the module is not followed.

9. Connect the battery energy control module connectors in the sequence shown to the battery energy control module.
10. Install the cell battery cooling manifold inlet hose. Refer to *High Voltage Battery Cooling Manifold Inlet Hose Replacement (Coolant to all Battery Cells) on page 9-336* or *High Voltage Battery Cooling Manifold Inlet Hose Replacement (Individual Battery Cell Coolant Inlet Hose) on page 9-338*.
11. Install the cell battery cooling manifold outlet hose. Refer to *High Voltage Battery Cooling Manifold Outlet Hose Replacement (Coolant to all Battery Cells) on page 9-339* or *High Voltage Battery Cooling Manifold Outlet Hose Replacement (Individual Battery Cell Coolant Outlet Hose) on page 9-342*.
12. Install the drive motor battery cover. Refer to *Drive Motor Battery Cover Replacement on page 9-449*.
13. Install the drive motor battery. Refer to *Drive Motor Battery Replacement and Shipping Preparation on page 9-524*.

Clear Secured High Voltage DTCs

Circuit/System Description

The hybrid powertrain control modules 1 and 2 independently monitor for high voltage safety conditions such as airbag deploy events and certain high voltage system faults. When either module identifies one of these conditions, a DTC may set and the vehicle is placed into a 'high voltage lockout' state. While in the lockout state, the high voltage contactor relays are prevented from closing.

The purpose of the high voltage lockout state is to allow for high voltage system inspection prior to re-enabling. A complete inspection of the high voltage system and components must be performed if the vehicle has been involved in a collision. Perform the *High Voltage System Inspection on page 9-441* procedure, if necessary, prior to clearing a Secured High Voltage DTCs/lockout state.

Diagnostic Aids

- The following conditions may result in a HV lockout state with or without a corresponding DTC:
  - High voltage component replacement
  - Low 12 V battery event
  - SPS programming event
  - Airbag deployment/crash event detected: The Inflatable Restraint Sensing and Diagnostic Module may or may not set a DTC but will continue to broadcast a crash event status until reset.
- Performing a scan tool DTC Clear may clear the diagnostic that set a HV system fault lockout state, but will not reset the lockout.
- Clearing powertrain DTCs will set the Inspection/ Maintenance (I/M) system status indicators to NO.
- The Clear Secured High Voltage DTCs procedure must be completed when the following components are replaced:
  - K16 Hybrid/EV Battery Energy Control Module
  - K112A–K112J Hybrid/EV Battery Interface Control Module
  - A4 Hybrid/EV Battery Pack
  - K114B Hybrid/EV Powertrain Control Module 2
  - T6 Power Inverter Module Assembly (Assembly includes the K114A Hybrid/EV Powertrain Control Module).

Reference Information

Special Tools

EL-49642 SPS Programming Support Tool

For equivalent regional tools, refer to *Special Tools on page 6-19*.

Circuit/System Verification

1. Vehicle ON.
2. With a scan tool, verify the Hybrid/EV Powertrain Control Module 2 parameters Hybrid/EV Battery Positive Contactor Command and Hybrid/EV Battery Negative Contactor Command each indicate Closed.

⇒ **If the contactors are not commanded Closed**

Refer to Circuit/System Testing.

⇓ **If the contactors are commanded Closed**

3. A Secured High Voltage DTC state is not present. All OK.

Circuit/System Testing

The Clear Secured High Voltage DTCs reset process requires scan tool interaction with **two or three different control modules in sequence** and can be completed using the following steps:

1. Install *EL-49642* SPS programming support tool.
2. Vehicle in Service Mode. With a scan tool select the Hybrid/EV Powertrain Control Module 2, Hybrid Battery Pack Contactor Open Reasons data list. Verify if either the Crash Event Detected or Air Bag Deployed parameters indicate YES.

⇒ **If either parameter displays YES**

2.1. Perform the *High Voltage System Inspection on page 9-441* procedure.

2.2. If the results of the inspection procedure support enabling of the high voltage system, perform the Inflatable Restraint and Sensing Diagnostic Module function Reset High Voltage Disable Request After Crash Event Detected.

2.3. Turn the vehicle OFF for 5 minutes.

2.4. Proceed to next step.

⇓ **If BOTH parameters indicate NO**

3. Vehicle in Service Mode. With a scan tool, clear All DTCs.

   Note: A command reject may appear on the scan tool after the first Clear Secured High Voltage DTCs request. If this occurs, ignore this command reject and continue to the next step.

4. With a scan tool, select Hybrid/EV Powertrain Control Module 2 Control Functions list. Select Clear Secured High Voltage DTCs and follow the on-screen instructions waiting 45 seconds before exiting the screen.
5. With a scan tool, select Hybrid/EV Powertrain Control Module Control Functions list. Select Clear Secured High Voltage DTCs. Select Continue button waiting 45 seconds before exiting the screen.
6. With a scan tool, select Hybrid/EV Powertrain Control Module 2 Control Functions list. Select Clear Secured High Voltage DTCs and follow the on-screen instructions.
7. With a scan tool, clear All DTCs.
8. Allow the Hybrid/EV powertrain Control Modules to enter sleep mode by performing the following:

   8.1. Turn the vehicle OFF.

   8.2. Ensure the scan tool is not communicating with any control modules by returning to the Home screen.

   8.3. Shut all doors. Do NOT depress the brake pedal or activate any vehicle controls such as the parking lights, fuel door release, etc.

   8.4. Ensure the scan tool is accessible without having to open doors or otherwise cause control module wake-up.

Note: Sleep mode is usually entered within two minutes after shutting off the vehicle. However, activating vehicle features such as Refuel Mode may extend this time up to 30 minutes.

8.5. Wait 5 minutes with the vehicle in the prescribed condition so that the modules may enter sleep mode.

9. With a scan tool, verify the Hybrid/EV Powertrain Control Module 2 has gone to sleep by ensuring communication is not present.

⇒ **If communication is present**

Repeat the previous step.

⇓ **If communication is not present**

10. Start the vehicle. With a scan tool, perform the Hybrid/EV Powertrain Control Module 2 reset function Hybrid/EV Battery Contactor Open Reasons Reset.
11. Verify that no DTCs are set.

⇒ **If any DTCs are set**

Refer to *Diagnostic Trouble Code (DTC) List - Vehicle on page 6-92*.

⇓ **If no DTCs are set**

12. All OK.

Hybrid/EV Battery Pack Capacity Learn

Note:

- DO NOT program a control module unless directed to by a service procedure or a service bulletin. If the control module is not properly configured with the correct calibration software, the control module will not control all of the vehicle features properly.
- Ensure the programming tool is equipped with the latest software and is securely connected to the data link connector. If there is an interruption during programming, programming failure or control module damage may occur.
- Stable battery voltage is critical during programming. Any fluctuation, spiking, over voltage or loss of voltage will interrupt programming. When required install the *EL-49642* SPS Programming Support Tool to maintain system voltage. If not available, connect a fully charged 12 V jumper or booster pack disconnected from the AC voltage supply. DO NOT connect a battery charger.
- Turn OFF or disable systems that may put a load on the vehicles battery such as; interior lights, exterior lights (including daytime running lights), HVAC, radio, etc.
- During the programming procedure, follow the SPS prompts for the correct ignition switch position.
- Clear DTCs after programming is complete. Clearing powertrain DTCs will set the Inspection/ Maintenance (I/M) system status indicators to NO.

Reference Information

Special Tools

EL-49642 SPS Programming Support Tool

For equivalent regional tools, refer to *Special Tools on page 6-19*.

Diagnostic Aids

The Hybrid/EV Battery Pack Capacity Learn procedure must be completed when the following components are replaced:

- Hybrid/EV Powertrain Control Module 2
- Hybrid/EV Battery Pack or all battery sections

Hybrid/EV Battery Pack Capacity Learn

The Hybrid/EV Battery Pack Capacity Learn procedure can be completed with a scan tool using the following steps:

1. Install *EL-49642* SPS programming support tool.
2. Vehicle in Service Mode.
3. With a scan tool, select Hybrid/EV Powertrain Control Module 2 Configuration/Reset Functions. Perform the Learn Functions - Hybrid/EV Battery Pack Capacity Learn and follow the on-screen instructions.
4. With a scan tool, Clear All DTCs.

Unsuccessful Programming Recovery

In the event of an interrupted or unsuccessful programming event, perform the following steps:

1. Ignition ON. Ensure the control module, DLC and programming tool connections are secure and the SPS software is up to date.
2. Verify the control module can be reprogrammed.

⇒ **If the control module cannot be reprogrammed**

2.1. Ignition OFF for one minute, ignition ON.

2.2. Verify the control module can be reprogrammed.

⇒ If the control module cannot be reprogrammed, replace the control module.

⇓ If the control module can be reprogrammed.

2.3. All OK.

⇓ **If the control module can be reprogrammed**

3. All OK.

Hybrid/EV Battery Cell Balancing

Diagnostic Instructions

- Perform the *Diagnostic System Check - Vehicle on page 6-91* prior to using this diagnostic procedure.
- Review *Strategy Based Diagnosis on page 6-83* for an overview of the diagnostic approach.
- *Diagnostic Procedure Instructions on page 6-84* provides an overview of each diagnostic category.

Circuit/System Description

Hybrid/EV Battery Cell Balancing

The *EL-50332* Hybrid/EV Battery Service Tool is used to match the voltage level of a replacement battery section to the existing battery sections following a service event. The tool will charge or discharge the replacement section, as required, based on measured cell group voltage data. The EL-50332 requires feedback from the battery energy control module during the balancing process. Communication is through the A4 Hybrid/EV Battery Pack X357 and X358 connectors and a low voltage interface harness provided with the *EL-50332* Hybrid/EV Battery Service Tool. The charging and discharging is performed by direct connection to the replacement battery section positive and negative terminals.

Reference Information

Schematic Reference

Hybrid/EV Energy Storage Schematics on page 9-348

Connector End View Reference

- *Component Connector End Views on page 11-455*
- *Inline Harness Connector End Views on page 11-761*

Description and Operation

Drive Motor Battery System Description on page 9-545

Electrical Information Reference

- *Circuit Testing on page 11-871*
- *Connector Repairs on page 11-895*
- *Testing for Intermittent Conditions and Poor Connections on page 11-877*
- *Wiring Repairs on page 11-883*

DTC Type Reference

Powertrain Diagnostic Trouble Code (DTC) Type Definitions on page 6-92

Scan Tool Reference

Control Module References on page 6-3 for scan tool information

Special Tools

- *EL-50332* Hybrid/EV Battery Service Tool
- *EL-50332-50* Low Voltage Communication Harness
- *EL-50332-105* Universal Fuse Box
- *EL-50332-110* Vehicle Interface Module
- *EL-50332-125* Vehicle Interface Module Low Voltage 24-Pin Cable
- *EL-50332-145* Black Banana Jack Cable
- *EL-50332-150* Red Banana Jack Cable
- *EL-50332-155* Green Banana Jack Cable
- *EL-50332-160* 12 V Auxiliary Power Cable
- *EL-50332-165* 12 V Auxiliary Clamps Adapter Cable
- *EL-50332-170* High Voltage Alligator Clamps
- *EL-50332-175* 120 V Power Cable
- *EL-50332-180* 250 V Power Cable – AUS
- *EL-50332-185* 250 V Power Cable – EU/Korea

Circuit/System Testing

Danger: Always perform the High Voltage Disabling procedure prior to servicing any High Voltage component or connection. Personal Protection Equipment (PPE) and proper procedures must be followed.

The High Voltage Disabling procedure will perform the following tasks:

- ***Identify how to disable high voltage.***
- ***Identify how to test for the presence of high voltage.***
- ***Identify condition under which high voltage is always present and personal protection equipment (PPE) and proper procedures must be followed.***

Failure to follow the procedures exactly as written may result in serious injury or death.

Danger: High voltage circuits should only be tested using a digital multimeter (DMM) and test leads with at least a CAT III rating, such as the J 39200-A Digital Multimeter. Failure to follow the procedures may result in serious injury or death.

Danger: This vehicle is equipped with a high voltage battery that is completely isolated from the chassis ground. Never utilize AC powered test equipment to probe the high voltage system. Serious injury, death and component damage could occur if the high voltage system is grounded through the electric utility.

Failure to follow the procedure exactly as written may result in serious injury or death.

Danger: Damage to a Lithium Ion hybrid/EV battery pack could result in fire, loss of electrical isolation or exposure to high voltage. Until the high voltage system inspection has been completed, store the vehicle with hybrid/EV battery pack installed outside in a secure area away from buildings and other vehicles and protected from rain, snow and other moisture. Remove the hybrid/EV battery pack high voltage manual disconnect lever and store it in a secure place outside the vehicle. Cover the exposed high voltage opening with UL® listed, or equivalent, insulation tape rated at a minimum of 600 V.

Failure to follow these precautions could result in personal injury, death and property damage.

Inspection Procedure

Note: Before balancing a battery section, make sure all of the external EL-50332 components and cables are in good condition and working order.

1. Connect the *EL-50332-145* black cable, *EL-50332-150* red cable, and *EL-50332-155* green cable to the *EL-50332-105* fuse box.
2. Connect the *EL-50332-120* cable to the *EL-50332-105* fuse box.
3. Connect the *EL-50332-120* cable to the *EL–50332* service tool.

4. Connect the *EL-50332-50* harness to the *EL-50332-110* vehicle interface module.
5. Connect the *EL-50332-125* 24-pin cable to the *EL-50332-110* vehicle interface module.
6. Connect the *EL-50332-125* 24-pin cable to the *EL-50332* service tool.

   Note: Refer to the Special Tools for the correct regional power cord.
7. Connect the appropriate regional power cord to the *EL-50332* service tool.
8. Connect the appropriate regional power cord into a known good power outlet.
9. Turn ON the *EL–50332* service tool using the power switch.
10. At the MAIN MENU, select SECTION BALANCE, press the SELECT soft key.
11. At the TYPE menu, select BEV, press the NEXT soft key.
12. At the TARGET menu, select appropriate section to be balanced, press the NEXT soft key.
13. Connect the *EL-50332-155* green cable to the A4 Hybrid/EV Battery Pack ground G350.
14. Connect the *EL-50332-145* black cable to the appropriate section negative stud to be balanced. Refer to *Hybrid/EV Energy Storage Schematics on page 9-348* for Hybrid Battery Sections 1–6.
15. Connect the *EL-50332-150* red cable to the appropriate section positive stud to be balanced. Refer to *Hybrid/EV Energy Storage Schematics on page 9-348* for Hybrid Battery Sections 1–6.
16. Press the NEXT soft key.
17. Connect the *EL-50332-50* harness to the A4 Hybrid/EV Battery Pack.

    Note: Depending on the charge condition of the battery pack and the section being balanced, this process can take up to 4 hours to perform.
18. Press the NEXT soft key.

    Note: The EL-50332 will now balance the selected section by charging/discharging, as appropriate. Target voltage will be based on measured pack cell group voltages. Initial balancing will be in a constant current mode (max 5 amp charge, 7.5 amp discharge). The tool will transition to a constant voltage mode (decreasing current) near the end of the event. A warranty code and pack voltage current data will be displayed at the conclusion of the balancing event.
19. An audible tone will sound at the end of balancing or in the event of a fault condition.

⇒ **A fault condition was detected**

Refer to the *EL–50332* Hybrid/EV Battery Service Tool Instruction Manual.

⇓ **Section balancing completed successfully**

20. At the Completed menu, press the NEXT soft key. Record warranty code. Press the EXIT soft key.
21. All OK.

Hybrid/EV Battery System Verification

Diagnostic Instructions

- Perform the *Diagnostic System Check - Vehicle on page 6-91* prior to using this diagnostic procedure.
- Review *Strategy Based Diagnosis on page 6-83* for an overview of the diagnostic approach.
- *Diagnostic Procedure Instructions on page 6-84* provides an overview of each diagnostic category.

Circuit/System Description

Hybrid/EV Battery System Verification

The *EL-50332* Hybrid/EV Battery Service Tool communicates with the battery energy control module through the A4 Hybrid/EV Battery Pack X357 and X358 connectors. The tool displays battery cell group voltages along with the calculated voltage difference between the highest and lowest readings. The tool also displays the temperatures read by the thermistors located within the battery sections. By reviewing this data, technicians can verify circuit integrity within the A4 Hybrid/EV Battery Pack prior to attaching the Hybrid/EV Battery Cover.

Reference Information

Schematic Reference

Hybrid/EV Energy Storage Schematics on page 9-348

Connector End View Reference

Testing for Intermittent Conditions and Poor Connections on page 11-877

Description and Operation

Drive Motor Battery System Description on page 9-545

Electrical Information Reference

- *Circuit Testing on page 11-871*
- *Connector Repairs on page 11-895*
- *Testing for Intermittent Conditions and Poor Connections on page 11-877*
- *Wiring Repairs on page 11-883*

DTC Type Reference

Powertrain Diagnostic Trouble Code (DTC) Type Definitions on page 6-92

Scan Tool Reference

Control Module References on page 6-3 for scan tool information

Special Tools

- *EL–50332* Hybrid/EV Battery Service Tool
- *EL–50332–50* Low Voltage Communication Harness
- *EL–50332–55* High Voltage Communication Harness
- *EL-50332–110* Vehicle Interface Module

- *EL–50332–125* Vehicle Interface Module Low Voltage 24-Pin Cable
- *EL–50332–175* 120 V Power Cable
- *EL-50332-180* 250 V Power Cable – AUS
- *EL-50332-185* 250 V Power Cable – EU/Korea

For equivalent regional tools, refer to *Special Tools on page 9-549*

Circuit/System Testing

Danger: Always perform the High Voltage Disabling procedure prior to servicing any High Voltage component or connection. Personal Protection Equipment (PPE) and proper procedures must be followed.

The High Voltage Disabling procedure will perform the following tasks:

- ***Identify how to disable high voltage.***
- ***Identify how to test for the presence of high voltage.***
- ***Identify condition under which high voltage is always present and personal protection equipment (PPE) and proper procedures must be followed.***

Failure to follow the procedures exactly as written may result in serious injury or death.

Danger: High voltage circuits should only be tested using a digital multimeter (DMM) and test leads with at least a CAT III rating, such as the J 39200-A Digital Multimeter. Failure to follow the procedures may result in serious injury or death.

Danger: This vehicle is equipped with a high voltage battery that is completely isolated from the chassis ground. Never utilize AC powered test equipment to probe the high voltage system. Serious injury, death and component damage could occur if the high voltage system is grounded through the electric utility.

Failure to follow the procedure exactly as written may result in serious injury or death.

Danger: Damage to a Lithium Ion hybrid/EV battery pack could result in fire, loss of electrical isolation or exposure to high voltage. Until the high voltage system inspection has been completed, store the vehicle with hybrid/EV battery pack installed outside in a secure area away from buildings and other vehicles and protected from rain, snow and other moisture. Remove the hybrid/EV battery pack high voltage manual disconnect lever and store it in a secure place outside the vehicle. Cover the exposed high voltage opening with UL® listed, or equivalent, insulation tape rated at a minimum of 600 V.

Failure to follow these precautions could result in personal injury, death and property damage.

Note: Before performing the Hybrid/EV Battery System Verification, make sure all of the external EL-50332 components are in good condition and working order.

1. Connect the *EL-50332-125* 24-pin cable to the *EL-50332-110* vehicle interface module.
2. Connect the *EL-50332-125* 24-pin cable to the *EL-50332* service tool.

   Note: Refer to the Special Tools for the correct regional power cord.
3. Connect the appropriate regional power cord to the *EL-50332* service tool.
4. Connect the appropriate regional power cord into a known good power outlet.
5. Power ON the *EL-50332* service tool using the power switch.
6. At the MAIN MENU, select PACK INFO, press the SELECT soft key.
7. At the PACK INFO TYPE, select ONE-SHOT, press the NEXT soft key.
8. At the MANUFACTURER menu, select correct BRAND, press the NEXT soft key.
9. At the MODEL menu, select correct MODEL, press the NEXT soft key.
10. At the COMMUNICATION CONNECTION menu, select HYBRID BATTERY CONTACTOR ASSEMBLY, press the NEXT soft key.
11. Connect the *EL-50332-55* harness to the A4 Hybrid/EV Battery Pack.
12. Connect the *EL-50332-55* harness to the *EL-50332-110* vehicle interface module, press the NEXT soft key.
13. Install the S15 Manual Service Disconnect, press the NEXT soft key.
14. At the PACK INFO menu, scroll down to the DELTA VCELL parameter. Record and verify the DELTA VCELL is less than 0.1 V.

⇒ **If the DELTA VCELL is 0.1 V or greater**

14.1. At the PACK INFO menu, press the EXIT soft key to end the Hybrid/EV Battery System Verification.

14.2. Remove the S15 Manual Service Disconnect.

14.3. Remove the *EL-50332-55* harness from the A4 Hybrid/EV Battery Pack.

14.4. Verify any repairs performed are complete and that all connections are secure.

Note: Recheck the EL–50332 cable connections by beginning at step 1 of the Hybrid/EV Battery System Verification.

14.5. Retest the Hybrid/EV Battery System Verification once all repairs have been rechecked.

⇓ **The DELTA VCELL is less than 0.1 V**

15. Record and verify all of the battery temperature sensor readings are within 6°C (10.8°F) of each other.

⇒ **If any of the battery temperature sensor readings are 6°C (10.8°F) or greater of each other**

15.1. At the PACK INFO menu, press the EXIT soft key to end the Hybrid/EV Battery System Verification.

15.2. Remove the S15 Manual Service Disconnect.

15.3. Remove the *EL-50332-55* harness from the A4 Hybrid/EV Battery Pack.

15.4. Verify any repairs performed are complete and that all connections are secure.

Note: Recheck the EL–50332 cable connections by beginning at step 1 of the Hybrid/EV Battery System Verification.

15.5. Retest the Hybrid/EV Battery System Verification once all repairs have been rechecked.

⇓ **The battery temperature sensor readings are within 6°C (10.8°F) of each other**

16. All OK.

Description and Operation

Drive Motor Battery System Description

Overview

The hybrid battery contains 192 cells. Groups of two cells are welded together in parallel called cell groups. There are a total of 96 cell groups in the hybrid battery assembly. These cell groups are electrically connected in series. Each individual cell group is rated at 3.78V, for a nominal system voltage of 363V direct current when the high voltage battery is at 50% state of charge. Cell voltage will range from 2.7V to 4.15V under normal temperatures and not under load. There are 16 cell groups in each battery section. The battery cell groups are joined to form 6 equal sections.

The battery energy control module monitors the voltage of the 96 battery cell groups. There are diagnostics for 12 hybrid battery interface control modules. The battery energy control module encompasses 10 of the 12 hybrid battery interface control modules. The hybrid battery interface control module attached to the side of module 6 encompasses 2 of the 12 hybrid battery interface control modules. The voltage sense lines are attached to each individual cell group, and these sense lines terminate at connectors located at the end of the battery section. Each connector has 16 voltage sense lines. A high voltage measuring harness connects the hybrid battery interface control module and the battery energy control module, to each of the battery sections. The hybrid battery interface control module encodes the voltage reading for the 16 individual cell groups in battery section 6 and transmits it to the battery energy control module. The hybrid/EV battery energy control module monitors and compares each of the 16 individual cell groups and the sum of the 16 cell total. The hybrid/EV battery interface control modules, hybrid/EV battery energy control module and low voltage harness are all serviceable components.

The hybrid/EV battery energy control module will diagnose its own systems and determine when a fault condition is present. Diagnostics and system status is communicated from the hybrid/EV battery energy control module to the hybrid/EV powertrain control module 2 through serial data. The hybrid/EV powertrain control module 2 is the host controller for diagnostic trouble code (DTC) information.

Location

The hybrid battery is located beneath the vehicle above the rear axle. The battery energy control module, hybrid battery interface control module, heater control module, and high voltage contactors are located within the hybrid battery assembly. The hybrid powertrain control module 2 is located under the front driver seat.

Hybrid/EV System High Voltage Isolation Description

Loss of Isolation Description

Vehicles equipped with high voltage storage and propulsion capability are designed with the high voltage circuits isolated from the vehicle chassis. If either the positive or negative high voltage Direct Current (DC) circuits or any of the high voltage Alternating Current (AC) phase circuits lose this isolation to the vehicle chassis, one or more diagnostic trouble codes (DTCs) may set.

Similar to typical 12V vehicle systems, loss of isolation can be as simple as a direct conductor-to-chassis short. Unlike 12V systems however, the potential within high voltage systems means that insulation breakdown is also a cause for loss of isolation. Therefore diagnosis for isolation loss requires testing with high voltage potential. Special multi-meters that utilize their own built-in high voltage, such as the *EL-50772* Insulation Multimeter, are used to test the isolation capability of high voltage components and circuits. Additionally, monitoring certain scan tool parameters when high voltage is active may also help to identify which high voltage components and circuits may have lost their chassis isolation.

Vehicle Loss of Isolation Detection

The vehicle performs two independent tests for isolation:

1. Passive isolation testing which is performed within the power inverter module by the hybrid powertrain control module 1.
2. Active isolation testing which is performed within the Hybrid/EV battery pack by the hybrid powertrain control module 2.

Passive Isolation Testing

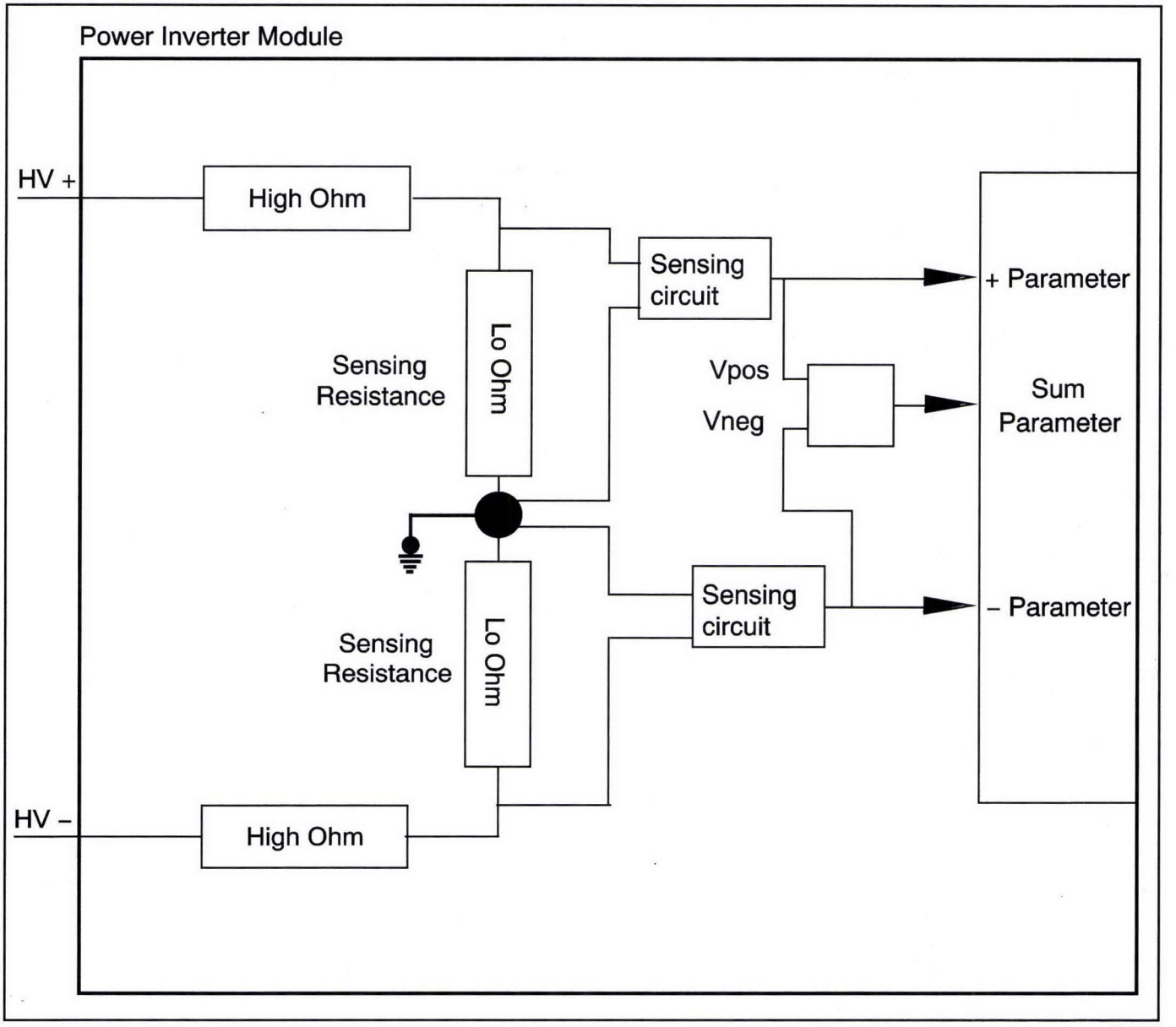

4043751

The power inverter module continuously performs isolation testing whenever high voltage to the module is present. The power inverter module has one isolation sensing circuit although the drive motor and aux pump control modules monitor and display the sensor data redundantly. The Positive Supply Isolation Voltage and the Negative Supply Isolation Voltage scan tool parameters give a real-time indication of Isolation status. Under normal operating conditions each of the parameters will indicate about half of the total Hybrid/EV battery pack high voltage potential. When a loss of isolation condition is observed, the Voltage scan tool parameter values will shift in respect to each other. When the voltage shift exceeds a set ratio, DTCs P1AF0, P1AF2, or P1E22 will set.

Note: Some high voltage components contain internal switching or inverter circuits that can interrupt a portion of their high voltage circuitry. If such a component, for example the passenger cabin heater, is OFF its complete internal circuitry is not being monitored. Likewise, these internally switched components cannot be fully tested off-vehicle with the *EL-50772* Insulation Multimeter, or equivalent.

Scan Tool Parameters

- Drive Motor Positive Supply Isolation Voltage
- Aux Trans Fluid Pump Positive Supply Isolation Voltage
- Drive Motor Negative Isolation Voltage
- Aux Trans Fluid Pump Negative Supply Isolation Voltage

The power inverter module isolation sensing circuit communicates one value, which is displayed redundantly by different modules. The data within the parameters for each module is identical.

Isolation Loss between HV Components and Chassis, Positive Side*

Isolation between HV Bus and Chassis	Normal Vehicle	10M	5M	1M	500K	200K Approximate DTC set	100K	None – Direct Short
Positive Isolation Parameter*	198V	180V	165V	110V	75V	35V	20V	0V
Negative Isolation Parameter*	192V	210V	225V	280V	315V	355V	370V	390V
Difference Between Parameters	0–15V	30V	60V	170V	240V	320V	350V	390V

*Typical values observed with a fully charged pack, 390V. A short to the positive bus is shown, a short to the negative bus would display inverted voltages of similar value.

Active Isolation Testing

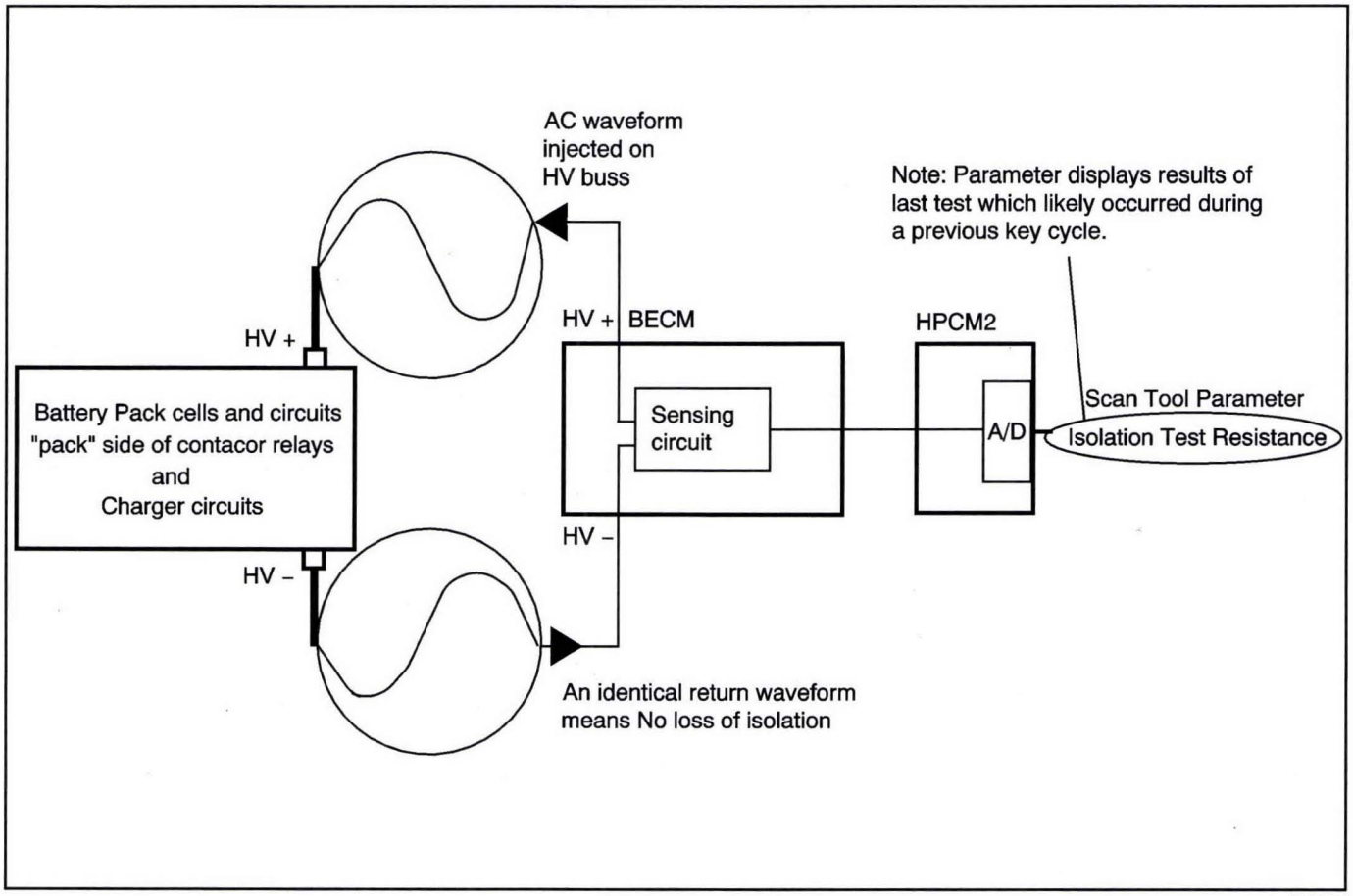

4043753

Active isolation testing is dedicated to monitoring the internal Hybrid/EV battery pack and the charging system HV circuits. The battery energy control module injects an AC signal on to one side of the high voltage system and monitors the return signal on the other side of the high voltage system. The difference between the injected and returned signal is used to calculate a resistance-to-chassis value. When resistance-to-chassis decreases below a set value, DTCs P0AA6 or P0DAA will set.

Active isolation testing occurs when the main high voltage contactor relays are open. For this reason most testing of the Hybrid/EV battery pack occurs just after the vehicle is shut off following a drive trip. Testing of the charging circuits will also occur whenever the charge cord is connected to the vehicle. The Isolation Test Resistance scan tool parameter indicates the resistance-to-chassis calculation determined when the last Active isolation test was performed.

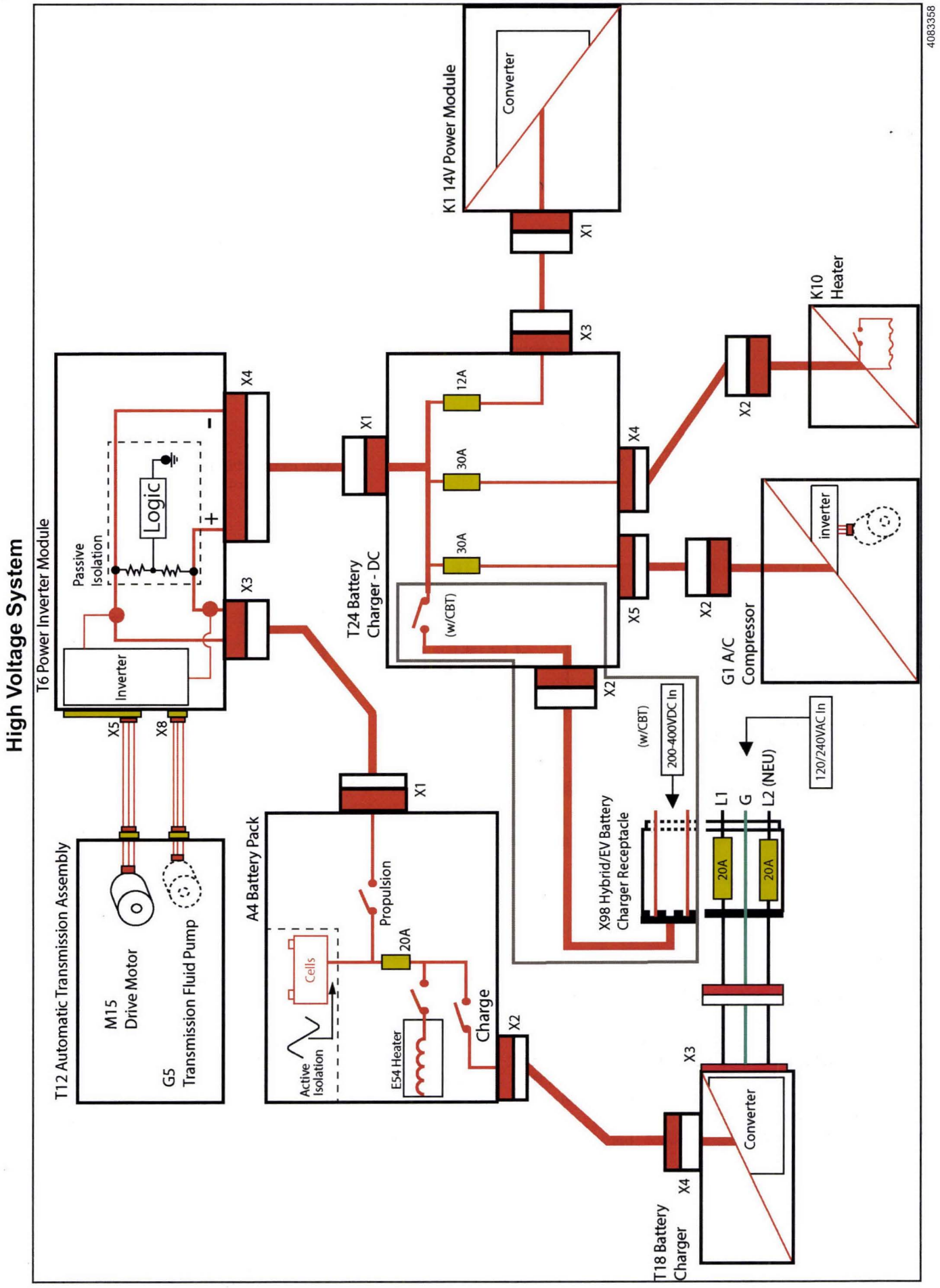
High Voltage System
4083358
K1 14V Power Module
Converter
X1
X3
K10
Heater
X2
T6 Power Inverter Module
X4
Passive
Isolation
Logic
-
+
X3
Inverter
X5
X8
T24 Battery
Charger - DC
X1
12A
30A
30A
(w/CBT)
X4
X5
X2
X2
G1 A/C
Compressor
inverter
(w/CBT)
200-400VDC In
120/240VAC In
X98 Hybrid/EV Battery
Charger Receptacle
L1
G
L2 (NEU)
20A
20A
T12 Automatic Transmission Assembly
M15
Drive Motor
G5
Transmission Fluid Pump
A4 Battery Pack
X1
Propulsion
20A
Cells
Active
Isolation
E54 Heater
Charge
X2
X3
Converter
X4
T18 Battery
Charger

Special Tools and Equipment

Illustration	Tool Number/ Description
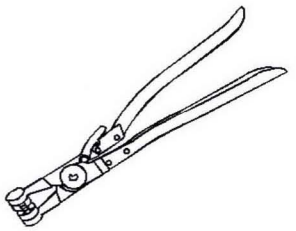 14013	BO-38185 J 38185 Hose Clamp Pliers
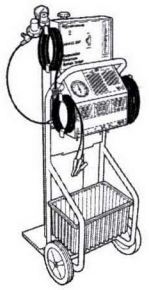 2657852	GE 41413-A J 41413-A Evaporative Emissions System Tester
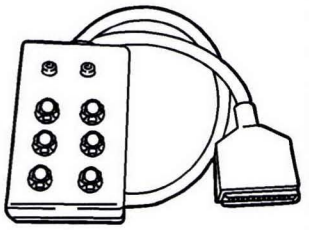 1985315	EL-48571 High Voltage Battery Pin Out Box
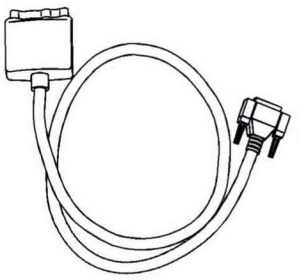 3953551	EL-48571-50 High Voltage Battery Pin Out Box Cable
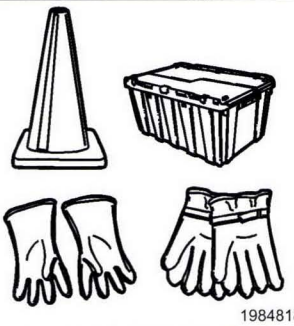 1984818	EL-48900 HEV Safety Kit

Illustration	Tool Number/ Description
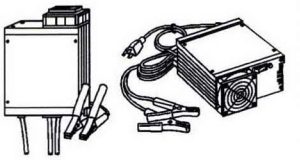 2223727	EL-49642 EL-50113 SPS Programming Support Tool
2570155	EL-50211 Low Voltage Jumper Harness Extension
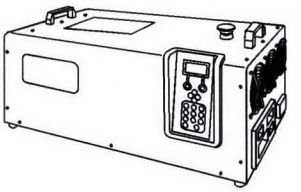 2921333	EL-50332 Hybrid/EV Battery Service Tool
3953055	EL-50332-50 Low Voltage Adapter Harness
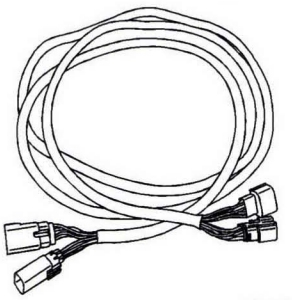 3953054	EL-50332-55 High Voltage Adapter Harness

Illustration	Tool Number/ Description
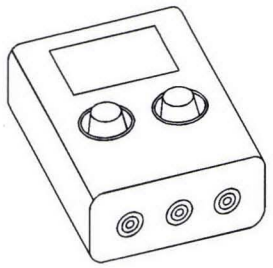 2921334	EL-50332-105 Universal Fuse Box
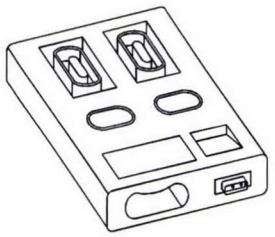 2921338	EL-50332-110 Vehicle Interface Module
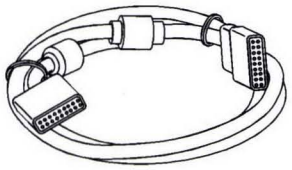 2921342	EL-50332-125 Vehicle Interface Module Low Voltage 24-Pin Cable
2921351	EL-50332-145 Black Banana Jack Cable
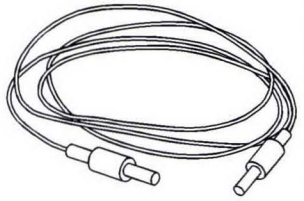 2921352	EL-50332-150 Red Banana Jack Cable

Illustration	Tool Number/ Description
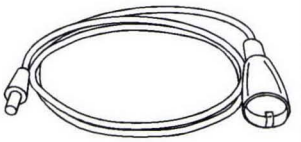 2921355	EL-50332-155 Green Banana Jack Cable
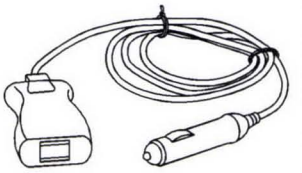 2921356	EL-50332-160 12 V Auxiliary Power Cable
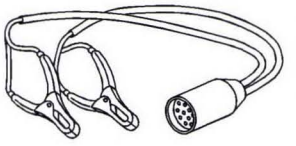 2921358	EL-50332-165 12 V Auxiliary Clamps Adapter Cable
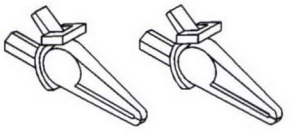 2921359	EL-50332-170 High Voltage Alligator Clamps
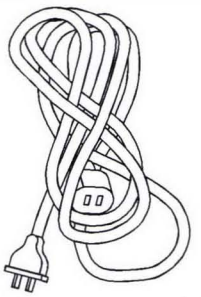 2921361	EL-50332-175 120 V Power Cable

Illustration	Tool Number/ Description
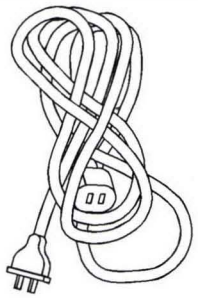 2921362	EL-50332-180 250 V Power Cable – AUS
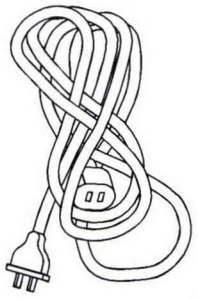 2921364	EL-50332-185 250 V Power Cable – EU/ Korea
2630648	EL-50772 Insulation Multimeter
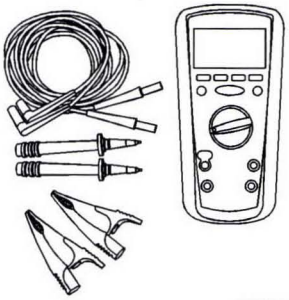 2630648	EL-50774 Low/High Resistance Meter

Illustration	Tool Number/ Description
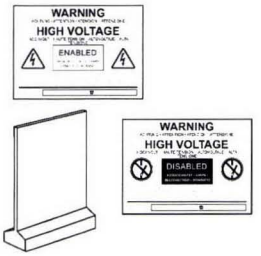 2699492	EL-50794 High Voltage Disabling/ Enabling Warning Signs with magnetic holder
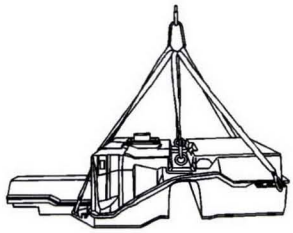 3556578	EL-50971 Battery Lifting Straps
3953053	EL-51099 Low Voltage Test Harness
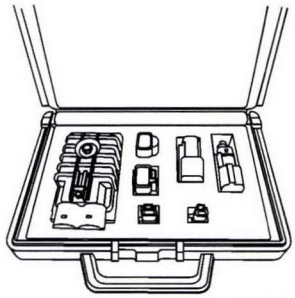 2713321	EL-51113 Battery Smoke Test Leak Adapters

Plug-In Charging

Schematic and Routing Diagrams

Plug-In Charging Schematics (Battery State of Charge Indicators)

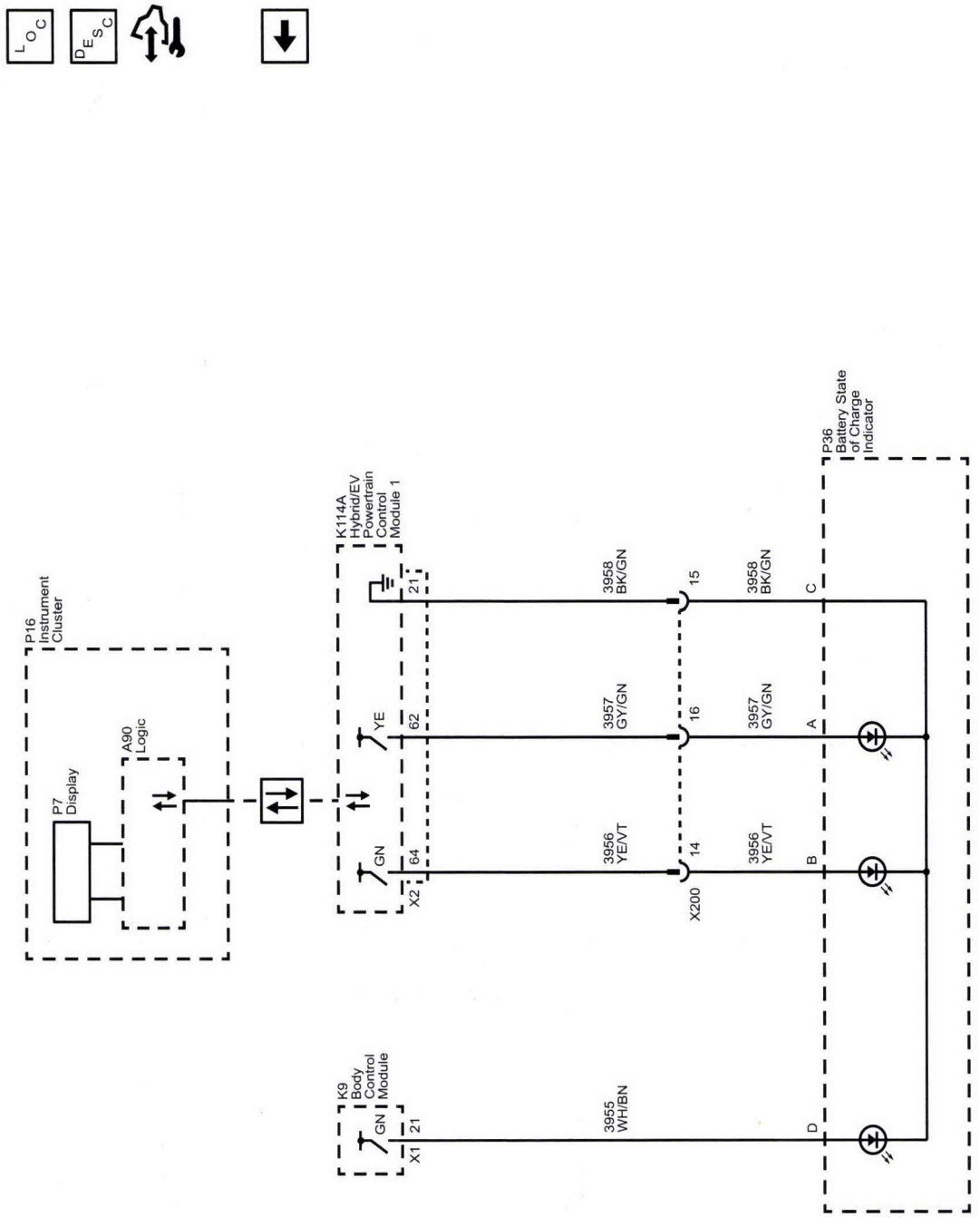

Plug-In Charging Schematics (AC Battery Charging)

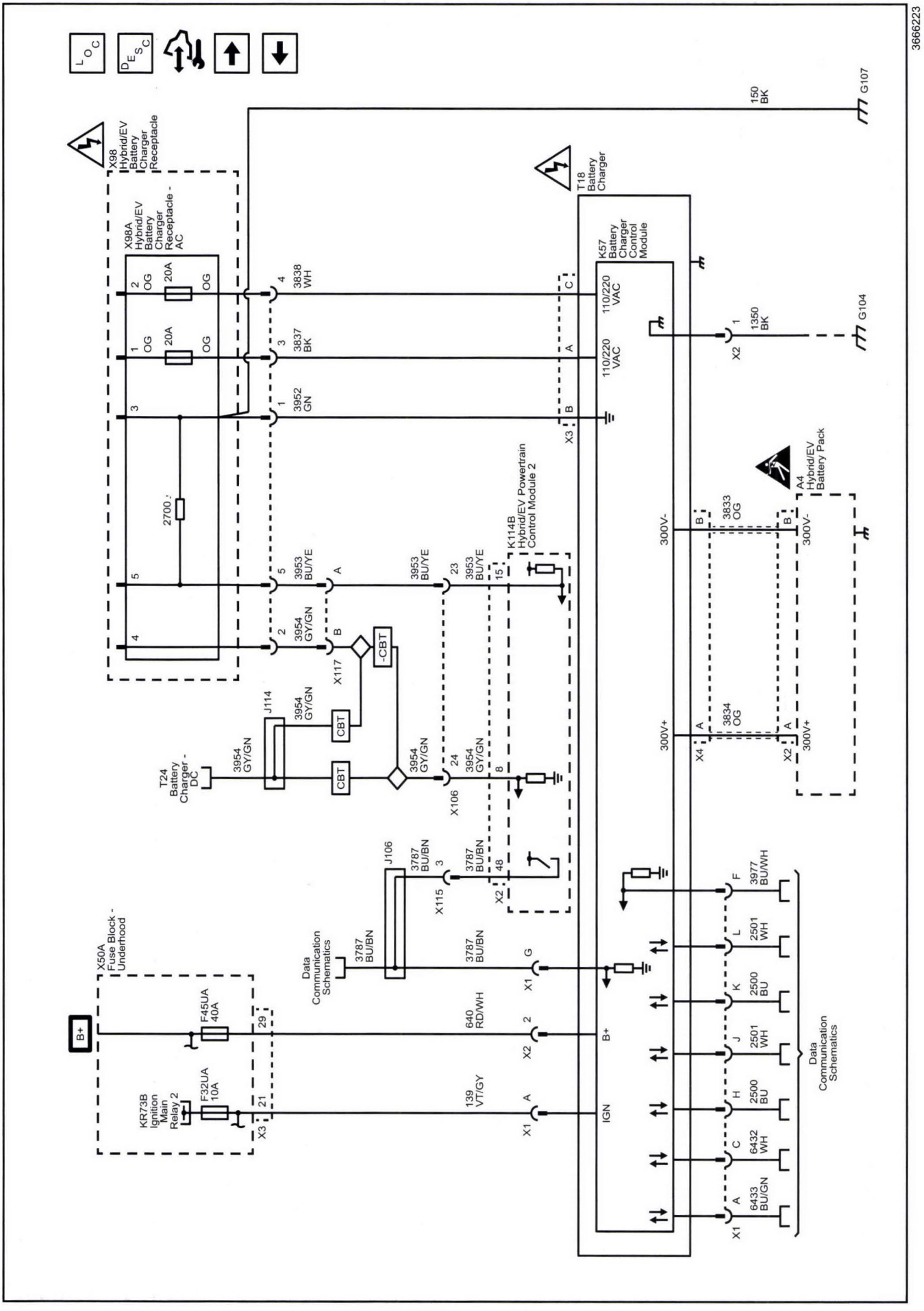

Plug-In Charging Schematics (DC Battery Charging - Power, Ground, Serial Data, and Signals (CBT))

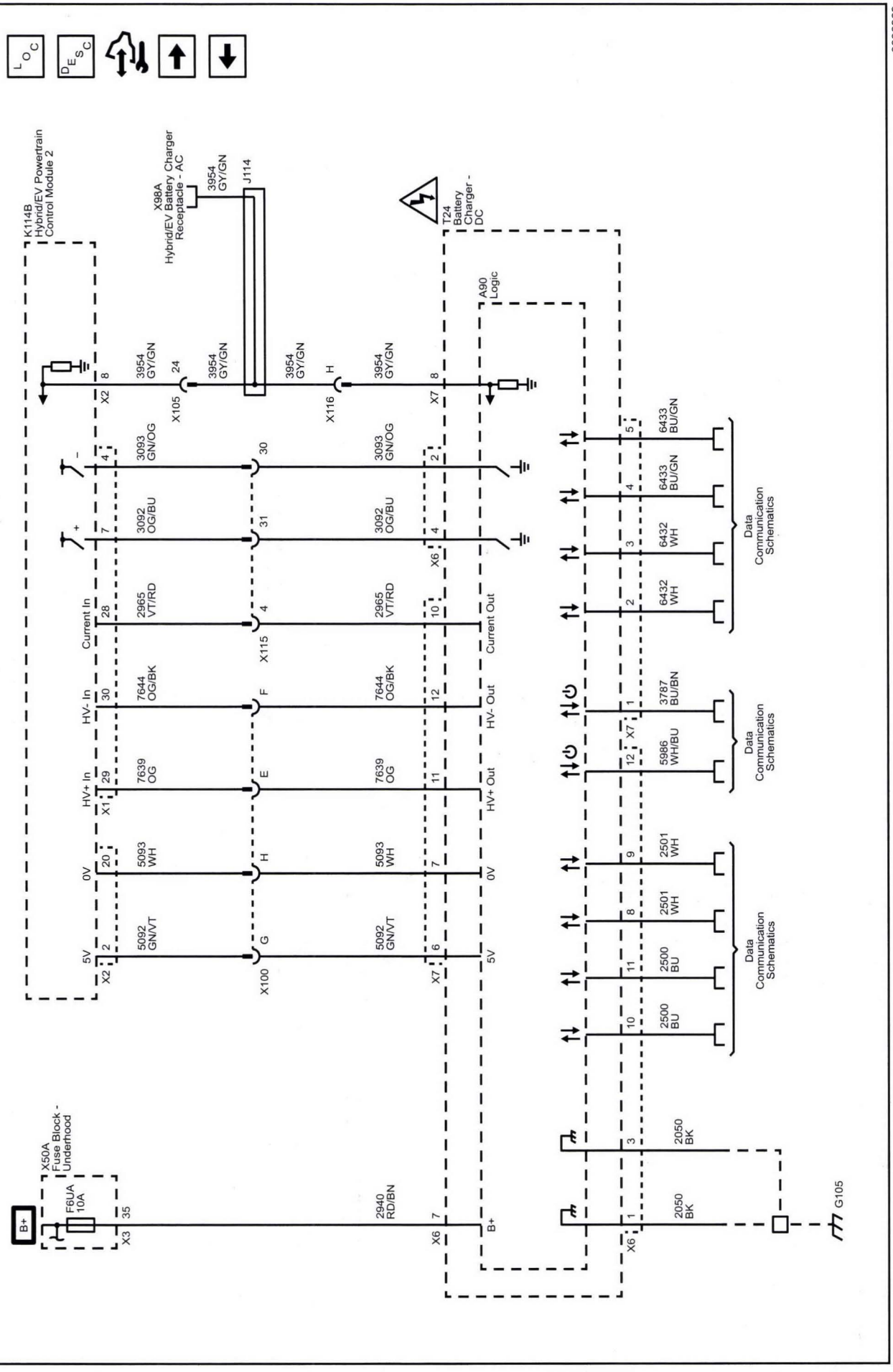

Plug-In Charging Schematics (DC Battery Charging - Contactors and Receptacle (CBT))

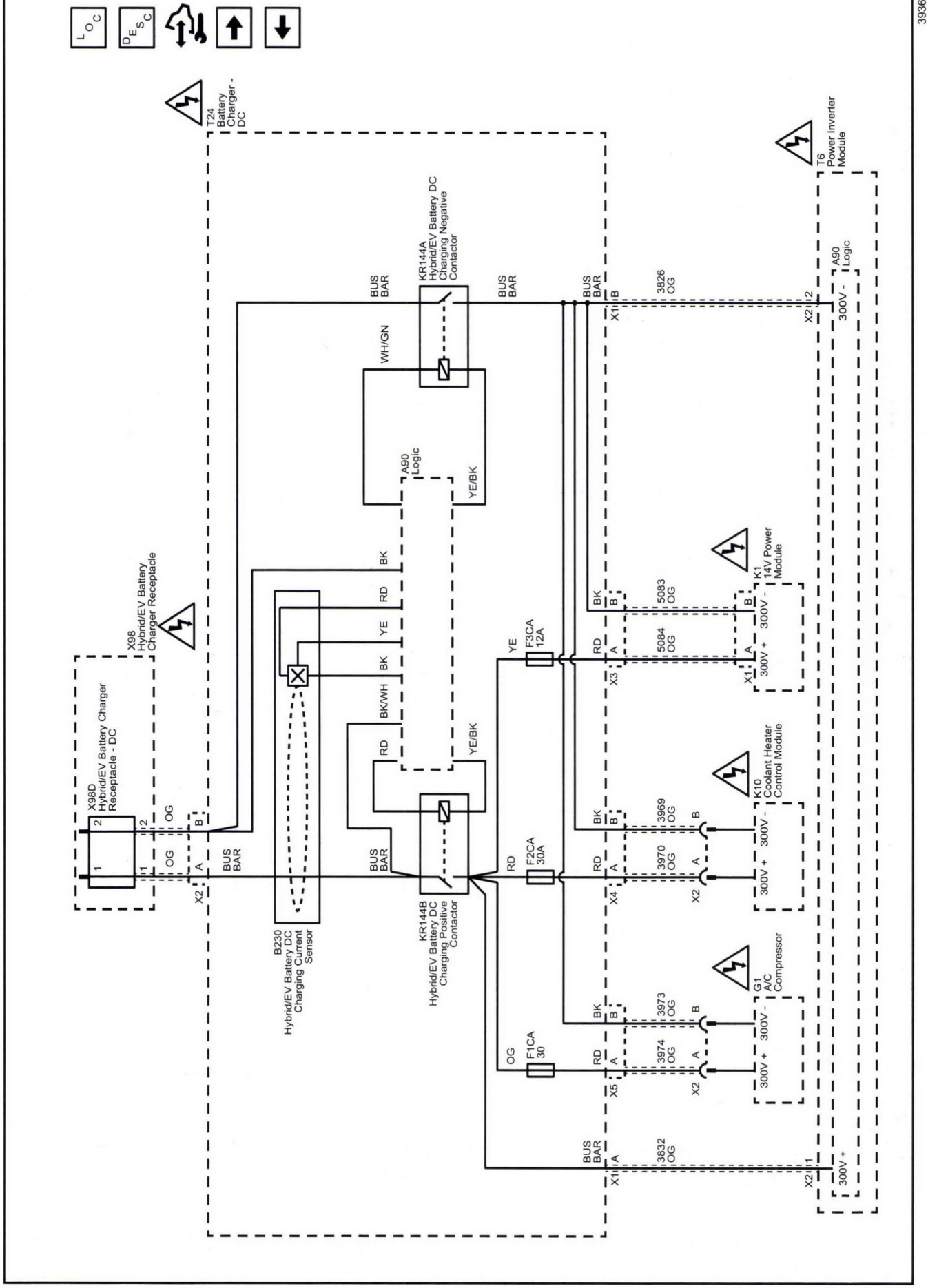

Plug-In Charging Schematics (Battery Charging Door/Receptacle (CBT))

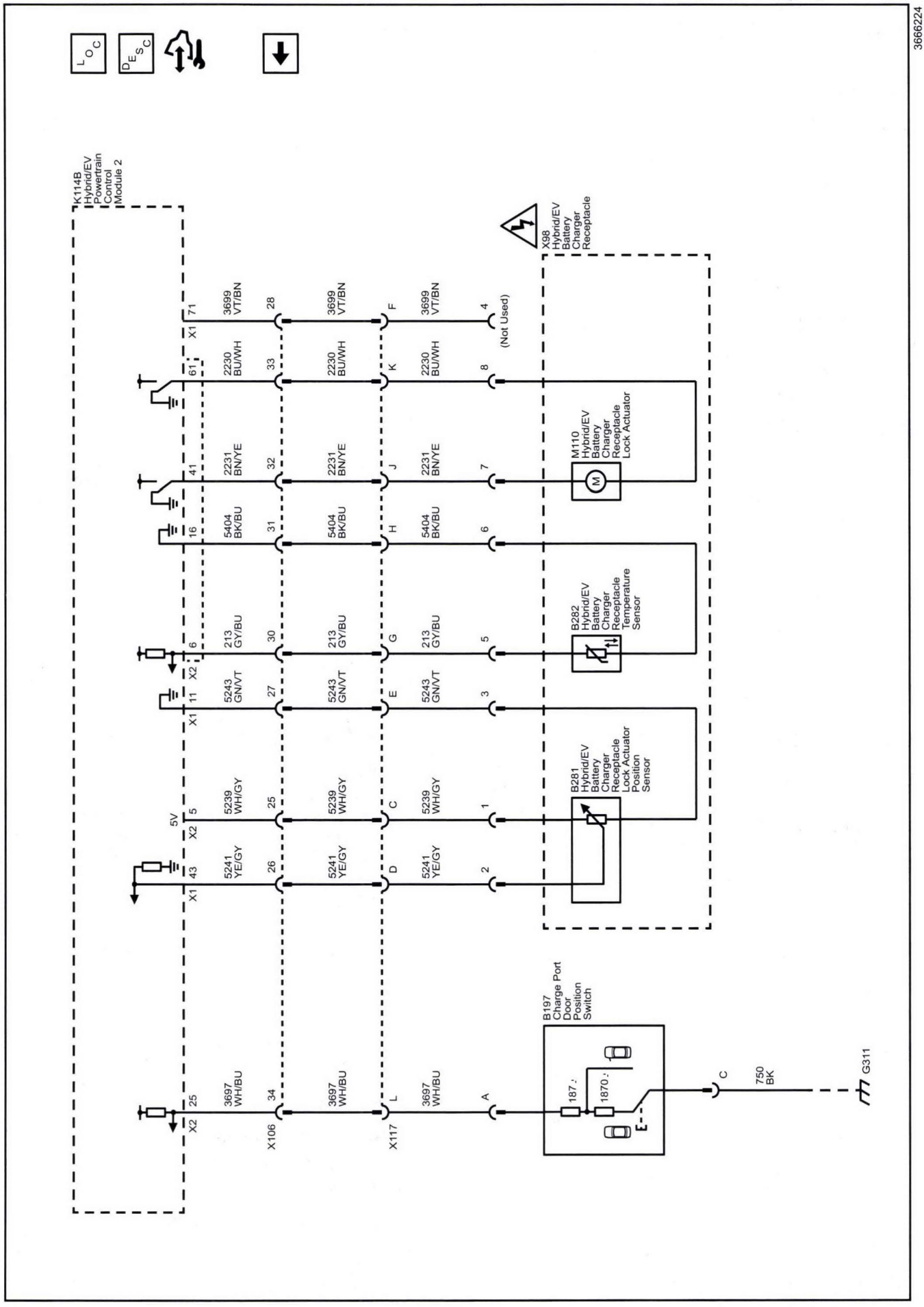

Diagnostic Information and Procedures

DTC P0CF4-P0CF6

Diagnostic Instructions

- Perform the *Diagnostic System Check - Vehicle on page 6-91* prior to using this diagnostic procedure.
- Review *Strategy Based Diagnosis on page 6-83* for an overview of the diagnostic approach.
- *Diagnostic Procedure Instructions on page 6-84* provides an overview of each diagnostic category.

DTC Descriptors

DTC P0CF4: Control Pilot Circuit Performance
DTC P0CF5: Control Pilot Circuit Low Voltage
DTC P0CF6: Control Pilot Circuit High Voltage

Diagnostic Fault Information

Circuit	Short to Ground	Open/High Resistance	Short to Voltage	Signal Performance
Control Pilot Signal	P0CF4, P0CF5, P0CF6, P0CF9, P0D01, 1	P0CF4, P0CF5, P0CF6, 1	P0CF4, P0CF5, P0CF6, P0CF9,1	P0CF4, P0CF5, P0CF6, 1
Proximity Signal	P0D58, 1	P0D59, 1	P0D59, 1	—
110/120 A/C Line 1	1	P0D3F, P1EE6	1	—
110/120 A/C Line 2	1	P1EE6	1	—
110/120 A/C Ground	—	P0D59, 1	1	—
1. Plug In Charging Malfunction				

Circuit/System Description

The hybrid/EV powertrain control module 2 monitors a pilot signal from the drive motor battery charger cable. The hybrid/EV powertrain control module 2 utilizes this signal to manage the charging process between the drive motor battery charger cable and the hybrid/EV powertrain control module 2.

Under normal charging conditions the control pilot signal is generated by the drive motor battery charger cable. This diagnostic runs with the drive motor battery charger cable disconnected to verify the vehicle side circuit integrity. The diagnostic signal is generated internally by the hybrid/EV powertrain control module 2.

Conditions for Running the DTC

DTC P0CF4, P0CF5, or P0CF6

- The vehicle 12 V battery system voltage needs to be above 9 V.
- The drive motor battery charger cable is disconnected and the charge port door is closed.
- Vehicle needs to be driven above 25 km/h (16 mph) for more than 10 seconds.

Conditions for Setting the DTC

DTC P0CF4

The control pilot circuit is not meeting its internal range requirements for 1 second. This can only be set internal to the hybrid/EV powertrain control module 2. This is an internal circuit voltage in the hybrid/EV powertrain control module 2 and can not be measured.

DTC P0CF5

The control pilot circuit voltage divided by the system voltage is less than 0.03 for 1 second. This is an internal circuit voltage in the hybrid/EV powertrain control module 2 and can not be measured.

DTC P0CF6

The control pilot circuit voltage divided by the system voltage is greater than 0.58 for 1 second. This is an internal circuit voltage in the hybrid/EV powertrain control module 2 and can not be measured.

Action Taken When the DTC Sets

- DTC P0CF4-P0CF6 are type A DTCs.
- Disables high voltage battery charging.

Conditions for Clearing the DTC

DTC P0CF4-P0CF6 are type A DTCs.

Reference Information

Schematic Reference

Plug-In Charging Schematics on page 9-553

Connector End View Reference

Component Connector End Views on page 11-455

Description and Operation

Plug-In Charging System Description and Operation on page 9-657

Electrical Information Reference

- *Circuit Testing on page 11-871*
- *Connector Repairs on page 11-895*
- *Testing for Intermittent Conditions and Poor Connections on page 11-877*
- *Wiring Repairs on page 11-883*

DTC Type Reference

Powertrain Diagnostic Trouble Code (DTC) Type Definitions on page 6-92

Scan Tool Reference

Control Module References on page 6-3 for scan tool information

Special Tools

EL-48900 HEV Safety Kit

For equivalent regional tools, refer to *Special Tools on page 9-658*.

Circuit/System Testing

Danger: Always perform the High Voltage Disabling procedure prior to servicing any High Voltage component or connection. Personal Protection Equipment (PPE) and proper procedures must be followed.

The High Voltage Disabling procedure includes the following steps:

- ***Identify how to disable high voltage.***
- ***Identify how to test for the presence of high voltage.***
- ***Identify condition under which high voltage is always present and personal protection equipment (PPE) and proper procedures must be followed.***

Before working on any high voltage system, be sure to wear the following Personal Protection Equipment:

- ***Safety glasses with appropriate side shields when within 15 meters (50 feet) of the vehicle, either indoors or outdoors.***
- ***Certified and up-to-date Class "0" Insulation gloves rated at 1000V with leather protectors.***
  - ***Visually and functionally inspect the gloves before use.***
  - ***Wear the Insulation gloves with leather protectors at all times when working with the high voltage battery assembly, whether the system is energized or not.***

Failure to follow the procedures may result in serious injury or death.

1. Vehicle OFF, disable the high voltage. Refer to *High Voltage Disabling on page 9-363*

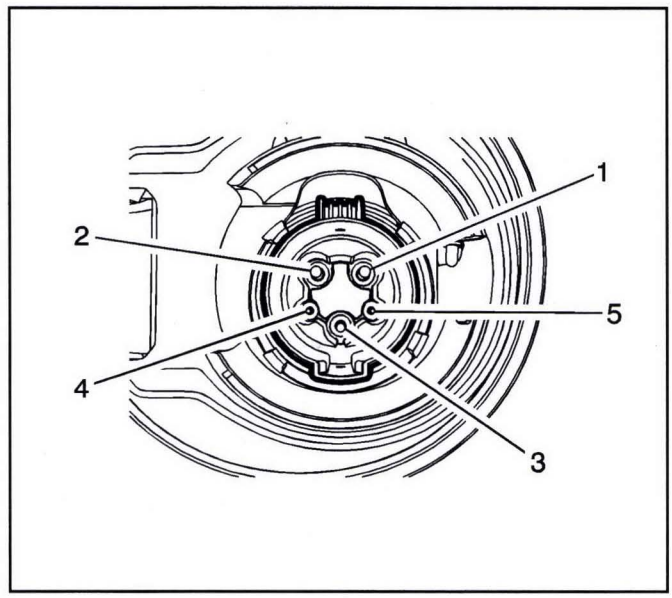

3549493

Note: The following tests are performed at the X98 Hybrid/EV Battery Charger Receptacle and not at the harness connector to the X98 Hybrid/EV Battery Charger Receptacle.

2. Test for 100k Ω–4M Ω between the control pilot signal terminal 4 at the X98 Hybrid/EV Battery Charger Receptacle and ground.

⇒ **If 4M Ω or greater**

2.1. Disconnect the X2 harness connector from K114B Hybrid/EV Powertrain Control Module 2.

2.2. Test for 2 Ω in the control pilot signal circuit end to end.

⇒ If 2 Ω or greater, repair the open/high resistance in the circuit.

⇒ If less than 2 Ω, replace the K114B Hybrid/EV Powertrain Control Module 2.

⇒ **If less than 100k Ω**

2.1. Disconnect the X2 harness connector from K114B Hybrid/EV Powertrain Control Module 2.

2.2. Test for infinite resistance between the control pilot signal circuit and ground.

⇒ If less than infinite resistance, repair the short to ground in the circuit.

⇒ If infinite resistance, replace the K114B Hybrid/EV Powertrain Control Module 2.

⇓ **If within the specified range**

3. Connect the 12 V battery. Vehicle in Service Mode.

4. Test for less than 1 V between the control pilot signal terminal 4 at the X98 Hybrid/EV Battery Charger Receptacle and ground.

⇒ **If 1 V or greater**

4.1. Vehicle OFF, disconnect the X2 harness connector from K114B Hybrid/EV Powertrain Control Module 2. Vehicle in Service Mode.

4.2. Test for less than 1 V between the control pilot signal circuit and ground.

⇒ If greater than 1 V, repair the short to voltage in the circuit.

⇒ If less than 1 V, replace the K114B Hybrid/EV Powertrain Control Module 2.

⇓ **If less than 1 V**

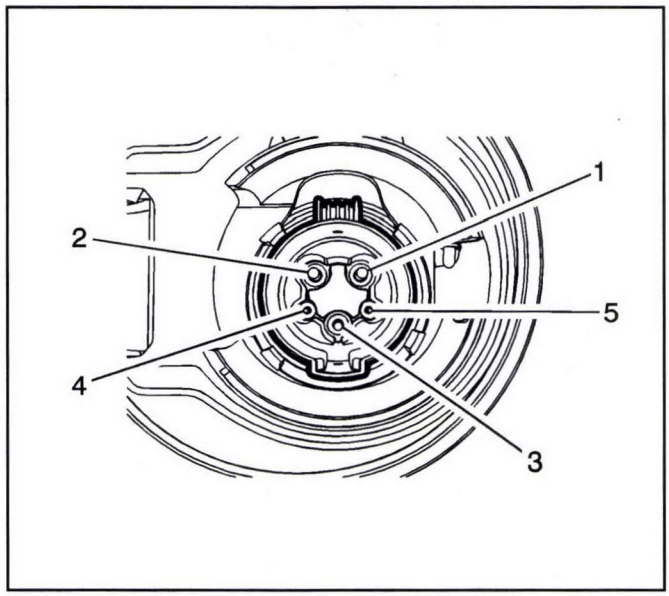

3549493

Note: The following tests are performed at the X98 Hybrid/EV Battery Charger Receptacle and not at the harness connector to the X98 Hybrid/EV Battery Charger Receptacle.

5. Test for infinite resistance between control pilot signal circuit terminal 4 of the X98 Hybrid/EV Battery Charger Receptacle and the terminals listed below;
   - Terminal 1
   - Terminal 2
   - Terminal 3
   - Terminal 5

⇒ **If less than infinite resistance**

Repair the short between the circuits.

⇓ **If infinite resistance**

6. Replace the K114B Hybrid/EV Powertrain Control Module 2.

Repair Instructions

Perform the *Diagnostic Repair Verification on page 6-123* after completing the repair.

- *Drive Motor Battery Charger Receptacle Replacement (Without quick charge) on page 9-652* or *Drive Motor Battery Charger Receptacle Replacement (With quick charge) on page 9-654*(Without quick charge)
- *300-Volt Battery Positive and Negative Cable Replacement (Drive Motor Generator Power Inverter Module to Drive Motor Battery) on page 9-454* or *300-Volt Battery Positive and Negative Cable Replacement (Drive Motor Generator Power Inverter Module to High Voltage Battery Disconnect Module) on page 9-457*
- *Control Module References on page 6-3* for hybrid/EV powertrain control module 2 replacement, programming and setup.

DTC P0CF9 or P0D01

Diagnostic Instructions

- Perform the *Diagnostic System Check - Vehicle on page 6-91* prior to using this diagnostic procedure.
- Review *Strategy Based Diagnosis on page 6-83* for an overview of the diagnostic approach.
- *Diagnostic Procedure Instructions on page 6-84* provides an overview of each diagnostic category.

DTC Descriptors

DTC P0CF9: Control Pilot Charging Switch Performance

DTC P0D01: Control Pilot Charging Ventilation Switch Performance

Diagnostic Fault Information

Circuit	Short to Ground	Open/High Resistance	Short to Voltage	Signal Performance
Control Pilot Signal	P0CF4, P0CF5, P0CF6, 1	P0CF4, P0CF5, P0CF6, 1	P0CF4, P0CF5, P0CF6,1	P0CF4, P0CF5, P0CF6, 1
Proximity Signal	P0D58, 1	P0D59, 1	P0D59, 1	—
110/120 A/C Line 1	1	P0D3F, P1EE6	1	—
110/120 A/C Line 2	1	P1EE6	1	—
110/120 A/C Ground	—	P0D59, 1	1	—
1. Plug In Charging Malfunction				

Circuit/System Description

The hybrid/EV powertrain control module 2 has two internal switches used to modify the control pilot signal. The first internal switch modifies the control pilot signal to indicate to the drive motor battery charger cable that the vehicle is either ready or not ready to accept energy. The second internal switch modifies the control pilot signal to indicate to some drive motor battery charger cables (currently not used) if indoor ventilation is required.

Conditions for Running the DTC

- The vehicle 12 V battery system voltage needs to be above 9 V.
- The drive motor battery charger cable is disconnected and the charge port door is closed.
- Vehicle in Service Mode.
- The diagnostics for DTC P0CF4-P0CF6 must have passed before these will run.

Conditions for Setting the DTC

The hybrid/EV powertrain control module 2 measures a control pilot signal voltage out of range for 10 seconds. This is an internal circuit voltage in the hybrid/EV powertrain control module 2 and can not be measured.

Action Taken When the DTC Sets

- DTC P0CF9 and P0D01 are type A DTCs
- Disables the high voltage battery charging.

Conditions for Clearing the DTC

DTC P0CF9 and P0D01 are type A DTCs.

Reference Information

Schematic Reference

Plug-In Charging Schematics on page 9-553

Connector End View Reference

Component Connector End Views on page 11-455

Description and Operation

Plug-In Charging System Description and Operation on page 9-657

Electrical Information Reference

- *Circuit Testing on page 11-871*
- *Connector Repairs on page 11-895*
- *Testing for Intermittent Conditions and Poor Connections on page 11-877*
- *Wiring Repairs on page 11-883*

DTC Type Reference

Powertrain Diagnostic Trouble Code (DTC) Type Definitions on page 6-92

Scan Tool Reference

Control Module References on page 6-3 for scan tool information

Special Tools

EL-48900 HEV Safety Kit

For equivalent regional tools, refer to *Special Tools on page 9-658*.

Circuit/System Verification

1. Vehicle in Service Mode, verify that DTC P0CF9 or P0D01 is not set.

⇒ **If either of the DTCs are set**

Replace the K114B Hybrid/EV Powertrain Control Module 2.

⇓ **If none of the DTCs are set**

2. All OK.

Repair Instructions

Perform the *Diagnostic Repair Verification on page 6-123* after completing the repair.

Control Module References on page 6-3 for hybrid/EV powertrain control module 2 replacement, programming and setup.

DTC P0D1F

Diagnostic Instructions

- Perform the *Diagnostic System Check - Vehicle on page 6-91* prior to using this diagnostic procedure.
- Review *Strategy Based Diagnosis on page 6-83* for an overview of the diagnostic approach.
- *Diagnostic Procedure Instructions on page 6-84* provides an overview of each diagnostic category.

DTC Descriptor

DTC P0D1F: Control Module Date/Time Synchronization Performance

Circuit/System Description

The hybrid/EV powertrain control module 2 monitors the date and time data it receives from the GPS satellite systems via the OnStar module. This time information is used to ensure the module's internal clock is synchronized to the customer's local time. The Time of Day Charging feature utilizes this internal clock to keep track of time and alarms for delayed charging modes. If this GPS time data is received during a drive cycle, the system is considered synchronized.

Conditions for Running the DTC

The vehicle needs to go from Vehicle OFF to Vehicle in Service Mode to start the diagnostic.

Conditions for Setting the DTC

The vehicle is driven for more than 5 consecutive drive cycles where trip distance exceeds 15 Km (9.3 mi), and the date and time were unavailable from the OnStar Module.

Action Taken When the DTC Sets

- DTC P0D1F is a type C DTC.
- On the Navigation screen "Default Charge Mode: Immediately" is displayed.
- The battery charger Time Of Day charging option is disabled, and charging mode is set to IMMEDIATE.

Conditions for Clearing the DTC

DTC P0D1F is a type C DTCs.

Reference Information

Schematic Reference

Plug-In Charging Schematics on page 9-553

Connector End View Reference

Component Connector End Views on page 11-455

Description and Operation

Plug-In Charging System Description and Operation on page 9-657

Electrical Information Reference

- *Circuit Testing on page 11-871*
- *Connector Repairs on page 11-895*
- *Testing for Intermittent Conditions and Poor Connections on page 11-877*
- *Wiring Repairs on page 11-883*

DTC Type Reference

Powertrain Diagnostic Trouble Code (DTC) Type Definitions on page 6-92

Scan Tool Reference

Control Module References on page 6-3 for scan tool information

Special Tools

EL-48900 HEV Safety Kit

For equivalent regional tools, refer to *Special Tools on page 9-658*.

Circuit/System Verification

1. Vehicle in Service Mode, verify no OnStar DTC's are set.

⇒ **If any OnStar DTC's are set**

Refer to *Diagnostic Trouble Code (DTC) List - Vehicle on page 6-92*.

⇓ **If no OnStar DTC's are set**

Note: The vehicle needs to be in an open, outside area where a cellular call can be successfully placed and GPS data can be received from satellites.

2. Verify the scan tool Telematics Communication Interface Control Module/Data Display/GPS Data/ Second parameter is incrementing.

⇒ **If seconds are not incrementing**

Refer to *No Global Positioning System (GPS) Reception on page 8-39*

⇓ **If seconds are incrementing**

3. Replace the K114B Hybrid/EV Powertrain Control Module 2.

Repair Instructions

Perform the *Diagnostic Repair Verification on page 6-123* after completing the repair.

Control Module References on page 6-3 for hybrid/EV powertrain control module 2 replacement, programming and setup.

DTC P0D21-P0D23

Diagnostic Instructions

- Perform the *Diagnostic System Check - Vehicle on page 6-91* prior to using this diagnostic procedure.
- Review *Strategy Based Diagnosis on page 6-83* for an overview of the diagnostic approach.
- *Diagnostic Procedure Instructions on page 6-84* provides an overview of each diagnostic category.

DTC Descriptors

DTC P0D21: Battery Charger Output Low Voltage

DTC P0D22: Battery Charger Output Current Performance

DTC P0D23: Battery Charger Output Shorted

Circuit/System Description

The hybrid/EV powertrain control module 2 monitors the battery charger high voltage output and current output and ensures they are within the proper range. The battery charger operates in either a constant current mode or a constant voltage mode. Whichever mode you are in will determine which diagnostic will be ran. The battery charger runs constant voltage mode at the beginning and end of the charge cycle and runs constant current mode most of the charging cycle.

The hybrid/EV powertrain control module 2 and battery charger control module monitor the battery charger high voltage output and current output and ensures it is in the proper range and there is not a resistive short in the charging bus.

Conditions for Running the DTC

P0D21

- Battery charger in heating mode ONLY:
- The vehicle 12 V battery system voltage is greater than 9 V.
  - The battery charger is charging and is in constant current mode.
  - Multi-function contactor must be commanded Open.
  - Battery charging contactors must be commanded Closed.
  - Commanded high voltage current must be greater than 0.5 A.
  - High voltage battery heater duty cycle must be greater than 5%.
  - Drive motor battery charger cable must be connected and vehicle receiving power.
  - DTC P0D4E, P0D4F, P0D53, P0D54, P1EEB, P1EEC, P1ECE, P0D5C, P16C5, P1EFD, or P1F16 is not set.

OR

- All other battery charging modes:
- The vehicle 12 V battery system voltage is greater than 9 V.
  - The battery charger is charging and is in constant voltage mode or constant current mode.
  - Multi-function contactor and battery charging contactors must be commanded Closed.
  - Drive motor battery charger cable must be connected and vehicle receiving power.
  - DTC P0D4E, P0D4F, P1EEB, P1EEC, P1ECE, P0D5C, P16C5, or P1EFD is not set.

P0D22

- The vehicle 12 V battery system voltage is greater than 9 V.
- The drive motor battery charger cable is connected and the Charge Mode is charging or is in Heating Only mode.
- The hybrid/EV powertrain control module 2 commands charger current output of greater than 0.5 A.
- The battery charging contactors are Closed.
- The charger Turn On Delay Time has expired by greater than or equal to 5 s.
- DTC P0D4E, P0D4F, P1EEB, P1EEC, P1ECE, P0D5C, P16C5, P1EFD, or P1F16 is not set.

P0D23

- The vehicle 12 V battery system voltage is greater than 9 V.
- There can not be any high voltage or current sensor module faults present.
- The battery charge system must be in the pre-charge state, and the multi-function contactor must be commanded Open.
- There can not be any high voltage battery heating or cooling requests active.
- The drive motor battery charger cable must be connected and vehicle receiving power.
- DTC P0D53, P0D54, P1EEB, P1EEC, P1ECE, P0D5C, P16C5, P1EFD, or P1F16 is not set.

Conditions for Setting the DTC

P0D21

Battery charger high voltage output voltage is less than 150 V.

OR

Battery charger bus voltage divided by the expected charger bus voltage is less than 0.75 V.

P0D22

The hybrid/EV powertrain control module 2 measures that the battery charging bus current is not within an acceptable percentage of the commanded current.

P0D23

The battery charger high voltage output current is greater than 0.35 A.

Action Taken When the DTC Sets

- DTC P0D22 and P0D23 are type A DTCs.
- DTC P0D21 is a type B DTC.
- Disables the vehicle high voltage battery charging.

Conditions for Clearing the DTC

- DTC P0D22 and P0D23 are type A DTCs.
- DTC P0D21 is a type B DTC.

Diagnostic Aids

Because both the E54 Hybrid/EV Battery Pack Coolant Heater and the T18 Battery Charger high voltage positive circuits share a fuse, integrity of the fuse can be verified by commanding the Hybrid/EV battery pack coolant heater ON with a scan tool and monitoring for an increase in pack coolant temperature. Additionally, an open fuse condition may also set battery heater related DTCs.

Reference Information

Schematic Reference

- *Plug-In Charging Schematics on page 9-553*
- *Hybrid/EV Energy Storage Schematics on page 9-348*

Connector End View Reference

Component Connector End Views on page 11-455

Description and Operation

Plug-In Charging System Description and Operation on page 9-657

Electrical Information Reference

- *Circuit Testing on page 11-871*
- *Connector Repairs on page 11-895*
- *Testing for Intermittent Conditions and Poor Connections on page 11-877*
- *Wiring Repairs on page 11-883*

DTC Type Reference

Powertrain Diagnostic Trouble Code (DTC) Type Definitions on page 6-92

Scan Tool Reference

Control Module References on page 6-3 for scan tool information

Special Tools

- *EL-48900* HEV Safety Kit
- *EL-50772* Insulation Multimeter

For equivalent regional tools, refer to *Special Tools on page 9-658*.

Circuit/System Verification

1. Vehicle in Service Mode.
2. Connect an AC-level drive motor battery charger cable to the charge receptacle.
3. Verify no other hybrid/EV battery-related DTCs, with the exception of DTC P0AF8, are set.

⇒ **If any hybrid/EV battery-related DTCs other than DTC P0AF8 are set**

Refer to *Diagnostic Trouble Code (DTC) List - Vehicle on page 6-92*

⇓ **If no hybrid/EV battery-related DTCs are set**

4. Verify that DTC P0D20, P0D21, P0D22, and P0D23 is not set.

⇒ **If DTC P0D21, P0D22, or P0D23 is set**

Refer to Circuit/System Testing.

⇓ **If DTC P0D21, P0D22, or P0D23 is not set**

5. All OK.

Circuit/System Testing

Danger: Always perform the High Voltage Disabling procedure prior to servicing any High Voltage component or connection. Personal Protection Equipment (PPE) and proper procedures must be followed.

The High Voltage Disabling procedure includes the following steps:

- ***Identify how to disable high voltage.***
- ***Identify how to test for the presence of high voltage.***
- ***Identify condition under which high voltage is always present and personal protection equipment (PPE) and proper procedures must be followed.***

Before working on any high voltage system, be sure to wear the following Personal Protection Equipment:

- ***Safety glasses with appropriate side shields when within 15 meters (50 feet) of the vehicle, either indoors or outdoors.***
- ***Certified and up-to-date Class "0" Insulation gloves rated at 1000V with leather protectors.***
  - ***Visually and functionally inspect the gloves before use.***
  - ***Wear the Insulation gloves with leather protectors at all times when working with the high voltage battery assembly, whether the system is energized or not.***

Failure to follow the procedures may result in serious injury or death.

1. Vehicle OFF, disable the high voltage. Refer to *High Voltage Disabling on page 9-363*. Disconnect the X2 connector at the A4 Hybrid/EV Battery Pack.

   Note: The following continuity tests must be performed using the EL-50772 Insulation Multimeter. Select the Isolation test setting, then select the 500 V range. Refer to *Troubleshooting With an Insulation Multimeter on page 9-438* for important usage instructions.

2. Using the *EL-50772* insulation multimeter test for 550M Ω between the harness connector terminal A and terminal B X2.

⇒ **If less than 550M Ω**

2.1. Disconnect the X4 connector at the T18 Battery Charger.

2.2. Test for 550M Ω between the A4 Hybrid/EV Battery Pack harness connector terminal A and terminal B X2.

⇒ If less than 550M Ω, replace the high voltage DC cables and test or replace the Hybrid/EV Battery Pack Coolant Heater Fuse as necessary.

⇒ If 550M Ω, replace the T18 Battery Charger and test or replace the Hybrid/EV Battery Pack Coolant Heater Fuse as necessary.

⇓ **If 550M Ω**

3. Disconnect the X4 connector at the T18 Battery Charger.

   Note: The following continuity test must be performed using the Ohm test setting and the non-insulation testing probe ports.

4. Test for less than 10 Ω between the high voltage circuit terminals listed below;
   - T18 Battery Charger harness terminal A X4 and A4 Hybrid/EV Battery Pack harness terminal A X2
   - T18 Battery Charger harness terminal B X4 and A4 Hybrid/EV Battery Pack harness terminal B X2

⇒ **If 10 Ω or greater**

Replace the high voltage DC cables.

⇓ **If less than 10 Ω**

5. Replace the T18 Battery Charger.
6. Verify that DTC P0D21, P0D22, or P0D23 does not set while operating the vehicle within the Conditions for Running the DTC.

⇒ **If any of the DTCs set**

7. Replace the Drive Motor Battery Positive High Voltage Contactor Relay assembly.
8. Verify that DTC P0D21, P0D22, or P0D23 does not set while operating the vehicle within the Conditions for Running the DTC.

⇒ **If any of the DTCs set**

Replace the K114B Hybrid Powertrain Control Module 2.

⇓ **If none of the DTCs set**

9. All OK.

Repair Instructions

Perform the *Diagnostic Repair Verification on page 6-123* after completing the repair.

- *Battery Distribution Fuse Block Replacement on page 9-303*
- *Drive Motor Battery Charger Replacement on page 9-649*
- *300-Volt Battery Positive and Negative Cable Replacement (Drive Motor Generator Power Inverter Module to Drive Motor Battery) on page 9-454* or *300-Volt Battery Positive and Negative Cable Replacement (Drive Motor Generator Power Inverter Module to High Voltage Battery Disconnect Module) on page 9-457*
- *Drive Motor Battery Positive High Voltage Contactor Relay Replacement on page 9-499*
- *Control Module References on page 6-3* for hybrid/EV powertrain control module 2 replacement, programming and setup.

DTC P0D2B or P0D2C

Diagnostic Instructions

- Perform the *Diagnostic System Check - Vehicle on page 6-91* prior to using this diagnostic procedure.
- Review *Strategy Based Diagnosis on page 6-83* for an overview of the diagnostic approach.
- *Diagnostic Procedure Instructions on page 6-84* provides an overview of each diagnostic category.

DTC Descriptors

DTC P0D2B: Control Pilot Indicator Control Circuit

DTC P0D2C: Charge Status Indicator Control Circuit

Diagnostic Fault Information

Circuit	Short to Ground	Open/High Resistance	Short to Voltage	Signal Performance
Charge Pilot Indicator Control	P0D2B	P0D2B	P0D2B	—
Charge Status Indicator Control	P0D2C	P0D2C, 1	P0D2C	—
Charge Complete Indicator Control	1	1	1	—
Low Reference	—	P0D2C, P0D2B	—	—
1. Plug In Charging Indicator Malfunction				

Circuit/System Description

The status of charging events (including delays) is communicated to the user through a charge status indicator and audio tones . The battery state of charge indicator, located on the top middle of the instrument panel, will be solid lit green when the vehicle is charging under automatic control. It will have a fast flash green if the charging is delayed and will begin later. It will have a slow flash green when charging is complete. A solid lit yellow indicator means the vehicle is not able to accept a charge. And if there is no indicator lit it means the electronic vehicle supply equipment is not working properly or connected.

Conditions for Running the DTC

Both conditions need to run for diagnostic to pass.

P0D2B

Condition 1

- The vehicle 12 V battery system voltage greater than 9 V.
- The hybrid/EV powertrain control module 2 is awake and communicating
- The drive motor battery charger cable is disconnected (LEDs commanded OFF).

Condition 2

- The vehicle 12 V battery system voltage greater than 9 V.
- The hybrid/EV powertrain control module 2 is awake and communicating
- The vehicle is connected to an AC supply and the battery charger is charging the vehicle (LEDs commanded ON).

P0D2C

Condition 1

- The vehicle 12 V battery system voltage greater than 9 V.
- The hybrid/EV powertrain control module 2 is awake and communicating
- The drive motor battery charger cable is disconnected (LEDs commanded OFF).

Condition 2

- The vehicle 12 V battery system voltage greater than 9 V.
- The hybrid/EV powertrain control module 2 is awake and communicating
- The vehicle is connected to an AC supply and the battery charger is charging the vehicle (LEDs commanded ON).
- The high voltage energy management bus is not enabled.

Conditions for Setting the DTC

- LED Commanded OFF, The hybrid/EV powertrain control module 2 detects a short to battery.
- LED Commanded ON, The hybrid/EV powertrain control module 2 detects a short to ground or an open/high resistance.

Action Taken When the DTC Sets

DTC P0D2B and P0D2C are type B DTCs.

Conditions for Clearing the DTC

DTC P0D2B and P0D2C are type B DTCs.

Reference Information

Schematic Reference

Plug-In Charging Schematics on page 9-553

Connector End View Reference

Component Connector End Views on page 11-455

Description and Operation

Plug-In Charging System Description and Operation on page 9-657

Electrical Information Reference

- *Circuit Testing on page 11-871*
- *Connector Repairs on page 11-895*
- *Testing for Intermittent Conditions and Poor Connections on page 11-877*
- *Wiring Repairs on page 11-883*

DTC Type Reference

Powertrain Diagnostic Trouble Code (DTC) Type Definitions on page 6-92

Scan Tool Reference

Control Module References on page 6-3 for scan tool information

Circuit/System Testing

1. Vehicle OFF and all vehicle systems OFF. It may take up to 2 minutes for all vehicle systems to power down. Disconnect the harness connector at the P36 battery state of charge indicator.
2. Test for less than 10 Ω between the low reference terminal C and ground.

⇒ **If 10 Ω or greater**

Repair the open/high resistance in the circuit.

2.1. Disconnect the X2 harness connector from K114B Hybrid/EV Powertrain Control Module 2

2.2. Test for 2 Ω in the low reference circuit end to end.

⇒ If 2 Ω or greater, repair the open/high resistance in the circuit.

⇒ If less than 2 Ω, replace the K114B Hybrid/EV Powertrain Control Module 2.

⇓ **If less than 10 Ω**

Note: If the drive motor battery charger cable is connected. The drive motor battery charger cable must be disconnected for more than 10 seconds before performing the next step.

3. Connect a test lamp between the signal terminal A and ground.
4. Verify the test lamp does not illuminate.

⇒ **If the test lamp does illuminate**

4.1. Disconnect the X2 harness connector at the K114B Hybrid/EV Powertrain Control Module 2.

4.2. Test for less than 1 V between the signal circuit terminal and ground.

⇒ If 1 V or greater, repair the short to voltage in the circuit.

⇒ If less than 1 V, replace the K114B Hybrid/EV Powertrain Control Module 2.

⇓ **If the test lamp does not illuminate**

5. Connect the drive motor battery charger cable.
6. Verify that the test lamp illuminates in the first 5 seconds of connecting the drive motor battery charger cable.

⇒ **If the test lamp does not illuminate**

6.1. Disconnect the X2 harness connector at the K114B Hybrid/EV Powertrain Control Module 2.

6.2. Test for infinite resistance between the signal circuit and ground

⇒ If less than infinite resistance, repair the short to ground on the circuit.

⇓ If infinite resistance

6.3. Test for less than 2 Ω the signal circuit end to end.

⇒ If 2 Ω or greater, repair the open/high resistance in the circuit.

⇒ If less than 2 Ω, replace the K114B Hybrid/EV Powertrain Control Module 2.

⇓ **If the test lamp does illuminate**

7. Disconnect the drive motor battery charger cable for at least 10 seconds. Connect a test lamp between the signal terminal B and ground.
8. Verify the test lamp does not illuminate.

⇒ **If the test lamp does illuminate**

8.1. Disconnect the X2 harness connector at the K114B Hybrid/EV Powertrain Control Module 2.

8.2. Test for less than 1 V between the signal circuit terminal and ground.

⇒ If 1 V or greater, repair the short to voltage in the circuit.

⇒ If less than 1 V, replace the K114B Hybrid/EV Powertrain Control Module 2.

⇓ **If the test lamp does not illuminate**

9. Connect the drive motor battery charger cable.
10. Verify that the test lamp illuminates within 25 seconds of connecting the drive motor battery charger cable.

⇒ **If the test lamp does not illuminate**

10.1. Disconnect the X2 harness connector at the K114B Hybrid/EV Powertrain Control Module 2.

10.2. Test for infinite resistance between the signal circuit and ground

⇒ If less than infinite resistance, repair the short to ground on the circuit.

⇓ If infinite resistance

10.3. Test for less than 2 Ω the signal circuit end to end.

⇒ If 2 Ω or greater, repair the open/high resistance in the circuit.

⇒ If less than 2 Ω, replace the K114B Hybrid/EV Powertrain Control Module 2.

⇓ **If the test lamp does illuminate**

11. Connect a test lamp between the signal terminal D and ground. Vehicle in Service Mode.
12. Command the BCM Charge Complete Indicator ON and OFF with a scan tool. The test lamp should turn ON and OFF when changing between the commanded states.

⇒ **If the test lamp is always ON**

12.1. Vehicle OFF, disconnect the X1 harness connector at the K9 Body Control Module.

12.2. Test for less than 1 V between the control circuit terminal and ground.

⇒ If 1 V or greater, repair the short to voltage in the circuit.

⇒ If less than 1 V, replace the K9 Body Control Module.

⇒ **If the test lamp is always OFF**

12.1. Vehicle OFF, disconnect the X1 harness connector at the K9 Body Control Module.

12.2. Test for infinite resistance between the control circuit and ground.

⇒ If less than infinite resistance, repair the short to ground on the circuit.

⇓ If infinite resistance

12.3. Test for less than 2 Ω the control circuit end to end.

⇒ If 2 Ω or greater, repair the open/high resistance in the circuit.

⇒ If less than 2 Ω, replace the K9 Body Control Module.

⇓ **The test lamp turns ON and OFF**

13. Replace the P36 Battery State Of Charge Indicator.

Repair Instructions

Perform the *Diagnostic Repair Verification on page 6-123* after completing the repair.

- *Battery Charge Indicator Replacement on page 8-97*
- *Control Module References on page 6-3* for body control module, hybrid/EV powertrain control module 2 replacement, programming and setup.

DTC P0D39-P0D3B, P0D49, P0D4E, P0D4F, P0D53, P0D54, P1ECB-P1ECD, P1ED0-P1ED2, P1ED6-P1ED9, P1EDB, P1EDC, P1EDE-P1EE1, P1EE3, P1EE5, P1EE7-P1EED, P1EFE-P1F02, or P1F14-P1F16

Diagnostic Instructions

- Perform the *Diagnostic System Check - Vehicle on page 6-91* prior to using this diagnostic procedure.
- Review *Strategy Based Diagnosis on page 6-83* for an overview of the diagnostic approach.
- *Diagnostic Procedure Instructions on page 6-84* provides an overview of each diagnostic category.

DTC Descriptors

DTC P0D39: Battery Charger Input Current Sensor Performance
DTC P0D3A: Battery Charger Input Current Sensor Circuit Low Voltage
DTC P0D3B: Battery Charger Input Current Sensor Circuit High Voltage
DTC P0D49: Battery Charger 14V Output Current Sensor Circuit Low Voltage
DTC P0D4E: Battery Charger Hybrid/EV Battery Output Voltage Sensor Circuit Low Voltage
DTC P0D4F: Battery Charger Hybrid/EV Battery Output Voltage Sensor Circuit High Voltage
DTC P0D53: Battery Charger Hybrid/EV Battery Output Current Sensor Circuit Low Voltage
DTC P0D54: Battery Charger Hybrid/EV Battery Output Current Sensor Circuit High Voltage
DTC P1ECB: Battery Charger High Voltage Converter 1 Temperature Sensor Circuit Low Voltage
DTC P1ECC: Battery Charger High Voltage Converter 1 Temperature Sensor Circuit High Voltage
DTC P1ECD: Battery Charger High Voltage Converter 1 Temperature Sensor Performance
DTC P1ED0: Battery Charger High Voltage Converter 2 Temperature Sensor Circuit Low Voltage
DTC P1ED1: Battery Charger High Voltage Converter 2 Temperature Sensor Circuit High Voltage
DTC P1ED2: Battery Charger High Voltage Converter 2 Temperature Sensor Performance
DTC P1ED6: Battery Charger Cold Plate Temperature Sensor Circuit Low Voltage
DTC P1ED7: Battery Charger Cold Plate Temperature Sensor Circuit High Voltage
DTC P1ED8: Battery Charger Cold Plate Temperature Sensor Performance
DTC P1ED9: Battery Charger Converter Input Voltage Sensor 1 Circuit Low Voltage
DTC P1EDB: Battery Charger Converter Input Voltage Sensor 1 Performance
DTC P1EDC: Battery Charger Converter Input Voltage Sensor 2 Circuit Low Voltage
DTC P1EDE: Battery Charger Converter Input Voltage Sensor 2 Performance
DTC P1EDF: Battery Charger Input Voltage Conditioner Temperature Sensor Circuit Low Voltage
DTC P1EE0: Battery Charger Input Voltage Conditioner Temperature Sensor Circuit High Voltage
DTC P1EE1: Battery Charger Input Voltage Conditioner Temperature Sensor Performance
DTC P1EE3: Battery Charger High Voltage Converter 1 Input Current Sensor Circuit High Voltage
DTC P1EE5: Battery Charger High Voltage Converter 2 Input Current Sensor Circuit High Voltage
DTC P1EE7: Battery Charger Control Module Reference Voltage 1 Circuit Low Voltage
DTC P1EE8: Battery Charger Control Module Reference Voltage 1 Circuit High Voltage
DTC P1EE9: Battery Charger Control Module Reference Voltage 2 Circuit Low Voltage
DTC P1EEA: Battery Charger Control Module Reference Voltage 2 Circuit High Voltage
DTC P1EEB: Battery Charger Control Module Reference Voltage 3 Circuit Low Voltage
DTC P1EEC: Battery Charger Control Module Reference Voltage 3 Circuit High Voltage
DTC P1EED: Battery Charger 14V Output Voltage Sensing Circuit
DTC P1EFE: Battery Charger Reverse Polarity Protection Circuit Performance
DTC P1EFF: Battery Charger Input Power Up Protection Circuit Performance
DTC P1F01: Battery Charger Control Module Supply Voltage Sensor Circuit Low Voltage
DTC P1F02: Battery Charger Control Module Supply Voltage Sensor Circuit High Voltage
DTC P1F14: Battery Charger Input Current Sensor Exceeded Learning Limit
DTC P1F15: Battery Charger 14V Output Current Sensor Exceeded Learning Limit
DTC P1F16: Battery Charger Hybrid/EV Battery Output Current Sensor Exceeded Learning Limit

Circuit/System Description

The battery charger will diagnose its own systems and determine when a fault condition is present. Diagnostics and system status is communicated from the battery charger to the hybrid/EV powertrain control module 2 through serial data. The hybrid/EV powertrain control module 2 is the host controller for DTC information.

The DTCs listed above for the battery charger are internal measurements that verify the charger is performing properly. The battery charger measures internal voltages, currents, and temperatures and verifies they are within the proper range.

Conditions for Running the DTC

These DTCs are internal faults of the battery charger. The vehicle needs to be connected to an AC supply and the battery charger is charging the vehicle.

Conditions for Setting the DTC

These DTCs are internal faults of the battery charger.

Action Taken When the DTC Sets

- DTC P0D39–P0D3B, P0D49, P0D4E, P0D4F, P0D53, P0D54, P1ECB–P1ECD, P1ED0–P1ED2, P1ED6–P1ED9, P1EDB, P1EDC, P1EDE–P1EE1, P1EE3, P1EE5, P1EE7–P1EED, P1EFE–P1F02, or P1F14–P1F16 are type A and B DTCs.
- Disables high voltage battery charging.

Conditions for Clearing the DTC

DTC P0D39–P0D3B, P0D49, P0D4E, P0D4F, P0D53, P0D54, P1ECB–P1ECD, P1ED0–P1ED2, P1ED6–P1ED9, P1EDB, P1EDC, P1EDE–P1EE1, P1EE3, P1EE5, P1EE7–P1EED, P1EFE–P1F02, or P1F14–P1F16 are type A and B DTCs.

Reference Information

Schematic Reference

Plug-In Charging Schematics on page 9-553

Connector End View Reference

Component Connector End Views on page 11-455

Description and Operation

Plug-In Charging System Description and Operation on page 9-657

Electrical Information Reference

- *Circuit Testing on page 11-871*
- *Connector Repairs on page 11-895*
- *Testing for Intermittent Conditions and Poor Connections on page 11-877*
- *Wiring Repairs on page 11-883*

DTC Type Reference

Powertrain Diagnostic Trouble Code (DTC) Type Definitions on page 6-92

Scan Tool Reference

Control Module References on page 6-3 for scan tool information

Circuit/System Verification

1. Verify that DTC P0D39–P0D3B, P0D49, P0D4E, P0D4F, P0D53, P0D54, P1ECB–P1ECD, P1ED0–P1ED2, P1ED6–P1ED9, P1EDB, P1EDC, P1EDE–P1EE1, P1EE3, P1EE5, P1EE7–P1EED, P1EFE–P1F02, or P1F14–P1F16 is not set.

⇒ **If any of the DTCs are set**

Replace the T18 Battery Charger.

⇓ **If none of the DTCs are set**

2. All OK.

Repair Instructions

Perform the *Diagnostic Repair Verification on page 6-123* after completing the repair.

Control Module References on page 6-3 for T18 Battery Charger, often referred to as the Drive Motor Battery Charger, replacement, programming, and setup

DTC P0D3E or P0D3F

Diagnostic Instructions

- Perform the *Diagnostic System Check - Vehicle on page 6-91* prior to using this diagnostic procedure.
- Review *Strategy Based Diagnosis on page 6-83* for an overview of the diagnostic approach.
- *Diagnostic Procedure Instructions on page 6-84* provides an overview of each diagnostic category.

DTC Descriptors

DTC P0D3E: Battery Charger Input Voltage Sensor Performance

DTC P0D3F: Battery Charger Input Voltage Sensor Circuit Low Voltage

Circuit/System Description

The battery charger will diagnose its own systems and determine when a fault condition is present. Diagnostics and system status is communicated from the battery charger to the hybrid/EV powertrain control module 2 through serial data. The hybrid/EV powertrain control module 2 is the host controller for DTC information.

The DTCs listed above for the battery charger are internal measurements that verify the charger is performing properly. The battery charger measures voltages, currents, and temperatures and verifies they are within the proper range.

Conditions for Running the DTC

The vehicle needs to be connected to an AC supply and the battery charger is charging the vehicle.

Conditions for Setting the DTC

The battery charger detects low (less than 90V) or unstable supply voltage during charging.

Action Taken When the DTC Sets

- DTC P0D3E and P0D3F are type A DTCs.
- Disables high voltage battery charging.

Conditions for Clearing the DTC

DTC P0D3E and P0D3F are type A DTCs.

Diagnostic Aids

Charging the vehicle with a wet drive motor battery charger cable can cause this DTC to set. Verify that customer did not attempt to charge vehicle in the rain or extremely wet environment.

Low or unstable household voltage supply can cause this DTC to set. Verify with customer that household voltage was not fluctuating during charge attempt and that they are using a dedicated circuit with no extension cords.

Reference Information

Schematic Reference

Plug-In Charging Schematics on page 9-553

Connector End View Reference

Component Connector End Views on page 11-455

Description and Operation

Plug-In Charging System Description and Operation on page 9-657

Electrical Information Reference

- *Circuit Testing on page 11-871*
- *Connector Repairs on page 11-895*
- *Testing for Intermittent Conditions and Poor Connections on page 11-877*
- *Wiring Repairs on page 11-883*

DTC Type Reference

Powertrain Diagnostic Trouble Code (DTC) Type Definitions on page 6-92

Scan Tool Reference

Control Module References on page 6-3 for scan tool information

Special Tools

EL-48900 HEV Safety Kit

For equivalent regional tools, refer to *Special Tools on page 9-658*.

Circuit/System Testing

Danger: Always perform the High Voltage Disabling procedure prior to servicing any High Voltage component or connection. Personal Protection Equipment (PPE) and proper procedures must be followed.

The High Voltage Disabling procedure includes the following steps:

- ***Identify how to disable high voltage.***
- ***Identify how to test for the presence of high voltage.***
- ***Identify condition under which high voltage is always present and personal protection equipment (PPE) and proper procedures must be followed.***

Before working on any high voltage system, be sure to wear the following Personal Protection Equipment:

- ***Safety glasses with appropriate side shields when within 15 meters (50 feet) of the vehicle, either indoors or outdoors.***

- ***Certified and up-to-date Class "0" Insulation gloves rated at 1000V with leather protectors.***
  - ***Visually and functionally inspect the gloves before use.***
  - ***Wear the Insulation gloves with leather protectors at all times when working with the high voltage battery assembly, whether the system is energized or not.***

Failure to follow the procedures may result in serious injury or death.

1. Clear DTC, connect the drive motor battery charger cable to vehicle and known good household supply voltage.
2. Vehicle ON.
3. Verify DTC P0D3E or P0D3F does not set.

⇒ **If none of the DTCs set**

Direct vehicle owner to verify proper connection of drive motor battery charger cable to their electrical supply and attempt charge again. If the vehicle will not charge, they will need electrical supply serviced.

⇓ **If any of the DTCs set**

4. Verify drive motor battery charger cable LEDs are not flickering.

⇒ **If drive motor battery charger cable LEDs are flickering**

Replace drive motor battery charger cable.

⇓ **If drive motor battery charger cable LEDs are not flickering**

5. Vehicle OFF, disconnect the drive motor battery charger cable from the vehicle, disable the high voltage at the T18 Battery Charger. Refer to *High Voltage Disabling on page 9-363*.
6. Disconnect the X3 harness connector at the T18 Battery Charger.
7. Test for a short circuit on the AC circuits by testing for infinite resistance between the pairs listed below:
   - T18 Battery Charger AC circuit terminals A X3 and B X3
   - T18 Battery Charger AC circuit terminals A X3 and C X3
   - T18 Battery Charger AC circuit terminals C X3 and B X3
   - T18 Battery Charger AC circuit terminal A X3 and ground
   - T18 Battery Charger AC circuit terminal C X3 and ground

⇒ **If less than infinite resistance**

7.1. Disconnect harness connector at the X98 Hybrid/EV Battery Charger Receptacle.

7.2. Test for a short circuit on the AC circuits by testing for infinite resistance between the appropriate pair listed below:
   - T18 Battery Charger AC circuit terminals A X3 and B X3
   - T18 Battery Charger AC circuit terminals A X3 and C X3
   - T18 Battery Charger AC circuit terminals C X3 and B X3
   - T18 Battery Charger AC circuit terminal A X3 and ground
   - T18 Battery Charger AC circuit terminal C X3 and ground

⇒ If less than infinite resistance, repair the short to ground on the circuit.

⇒ If infinite resistance, replace the X98 Hybrid/EV Battery Charger Receptacle.

⇓ **If infinite resistance**

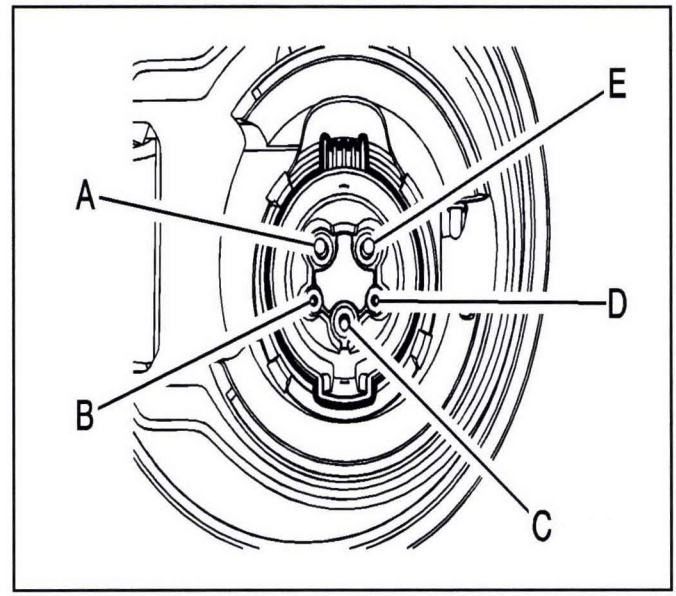

2874492

Note: The following tests are performed at the external X98 Hybrid/EV Battery Charger Receptacle and not at the harness connector to the X98 Hybrid/EV Battery Charger Receptacle.

8. Test for less than 2 Ω in the AC circuits end to end by measuring between the pairs listed below:
   - T18 Battery Charger circuit terminal A X3 and X98 Hybrid/EV Battery Charger Receptacle terminal E
   - T18 Battery Charger circuit terminal C X3 and X98 Hybrid/EV Battery Charger Receptacle terminal A

⇒ **If 2 Ω or greater**

8.1. Disconnect the harness connector at the X98 Hybrid/EV Battery Charger Receptacle.

Note: This test is performed at the vehicle side of the harness connectors.

8.2. Test for less than 2 Ω in the AC circuit end to end by measuring between the appropriate pair listed below:
   - T18 Battery Charger circuit terminal A X3 and X98 Hybrid/EV Battery Charger Receptacle harness connector circuit terminal E
   - T18 Battery Charger circuit terminal C X3 and X98 Hybrid/EV Battery Charger Receptacle harness connector circuit terminal A

⇒ If 2 Ω or greater, repair the open/high resistance in the circuit.

⇒ If less than 2 Ω , replace the X98 Hybrid/EV Battery Charger Receptacle.

⇓ **If less than 2 Ω**

9. Replace the T18 Battery Charger.

Repair Instructions

Perform the *Diagnostic Repair Verification on page 6-123* after completing the repair.

- *Drive Motor Battery Charger Receptacle Replacement (Without quick charge) on page 9-652* or *Drive Motor Battery Charger Receptacle Replacement (With quick charge) on page 9-654* for X98 Hybrid/EV Battery Charger Receptacle replacement
- *Control Module References on page 6-3* for T18 Battery Charger replacement, programming and setup

DTC P0D40, P1EDA, P1EDD, or P1F03

Diagnostic Instructions

- Perform the *Diagnostic System Check - Vehicle on page 6-91* prior to using this diagnostic procedure.
- Review *Strategy Based Diagnosis on page 6-83* for an overview of the diagnostic approach.
- *Diagnostic Procedure Instructions on page 6-84* provides an overview of each diagnostic category.

DTC Descriptors

DTC P0D40: Battery Charger Input Voltage Sensor Circuit High Voltage

DTC P1EDA: Battery Charger Converter Input Voltage Sensor 1 Circuit High Voltage

DTC P1EDD: Battery Charger Converter Input Voltage Sensor 2 Circuit High Voltage

DTC P1F03: Battery Charger Control Module Supply Voltage Performance

Circuit/System Description

The battery charger, often referred to as the drive motor battery charger, contains several internal sensor diagnostics that require the vehicle AC supply to be in the proper range. These diagnostics are internal battery charger diagnostics, but need the correct AC voltage to run properly.

Conditions for Running the DTC

- The vehicle 12 V battery system voltage is above 9 V.
- The vehicle is connected to an AC supply.

Conditions for Setting the DTC

P0D40

The vehicle AC supply is greater 422 V AC.

P1EDA and P1EDD

The battery charger internal bulk voltage is greater than about 464 V DC. This is a measurement internal to the battery charger.

P1F03

The battery charger detects internal PBIAS voltage is greater than about 15 V DC. This is a measurement internal to the battery charger.

Action Taken When the DTC Sets

- DTC P0D40, P1EDA, P1EDD, and P1F03 are type A DTCs.
- Disables the vehicle high voltage battery charging.

Conditions for Clearing the DTC

DTC P0D40, P1EDA, P1EDD, and P1F03 are type A DTCs.

Reference Information

Schematic Reference

Plug-In Charging Schematics on page 9-553

Connector End View Reference

Component Connector End Views on page 11-455

Description and Operation

Plug-In Charging System Description and Operation on page 9-657

Electrical Information Reference

- *Circuit Testing on page 11-871*
- *Connector Repairs on page 11-895*
- *Testing for Intermittent Conditions and Poor Connections on page 11-877*
- *Wiring Repairs on page 11-883*

DTC Type Reference

Powertrain Diagnostic Trouble Code (DTC) Type Definitions on page 6-92

Scan Tool Reference

Control Module References on page 6-3 for scan tool information

Circuit/System Testing

1. Clear DTC, connect the drive motor battery charger cable to the vehicle and a known good household supply voltage.
2. Vehicle ON.
3. Verify DTC P0D40, P1EDA, P1EDD, or P1F03 does not set.

⇒ **If any of the DTCs set**

Replace the T18 Battery Charger.

⇓ **If none of the DTCs set**

4. Direct the vehicle owner to verify proper connection of the drive motor battery charger cable to the electrical supply that caused the charging issue and attempt to charge again. If the vehicle will not charge, they will need the electrical supply serviced.

Repair Instructions

Perform the *Diagnostic Repair Verification on page 6-123* after completing the repair.

Control Module References on page 6-3 for T18 Battery Charger, often referred to as the Drive Motor Battery Charger, replacement, programming and setup.

DTC P0D43-P0D45

Diagnostic Instructions

- Perform the *Diagnostic System Check - Vehicle on page 6-91* prior to using this diagnostic procedure.
- Review *Strategy Based Diagnosis on page 6-83* for an overview of the diagnostic approach.
- *Diagnostic Procedure Instructions on page 6-84* provides an overview of each diagnostic category.

DTC Descriptors

DTC P0D43: Battery Charger 14V Output Voltage Sensor Performance
DTC P0D44: Battery Charger 14V Output Voltage Sensor Circuit Low Voltage
DTC P0D45: Battery Charger 14V Output Voltage Sensor Circuit High Voltage

Circuit/System Description

The battery charger will diagnose its own systems and determine when a fault condition is present. Diagnostics and system status is communicated from the battery charger to the hybrid/EV powertrain control module 2 through serial data. The hybrid/EV powertrain control module 2 is the host controller for DTC information.

The battery charger takes internal measurements that verify the charger is performing properly. The battery charger measures internal voltages, currents, and temperatures and verifies they are within the proper range.

Conditions for Running the DTC

The vehicle needs to be connected to an AC supply and the battery charger is charging the vehicle.

Conditions for Setting the DTC

The battery charger output voltage is outside expected range.

Action Taken When the DTC Sets

- DTC P0D43-P0D44 are type A DTCs.
- DTC P0D45 is a type B DTC.
- Disables high voltage battery charging.

Conditions for Clearing the DTC

- DTC P0D43-P0D44 are type A DTCs.
- DTC P0D45 is a type B DTC.

Diagnostic Aids

- External battery chargers can cause this DTC to set. Ensure customer did not have an external battery charger connected to vehicle during plug-in charging attempt.
- In the case that a short to ground is found during Circuit/System Testing, it may be necessary to replace the associated fuse in the underhood fuse block.

Reference Information

Schematic Reference

Plug-In Charging Schematics on page 9-553

Connector End View Reference

Component Connector End Views on page 11-455

Description and Operation

Plug-In Charging System Description and Operation on page 9-657

Electrical Information Reference

- *Circuit Testing on page 11-871*
- *Connector Repairs on page 11-895*
- *Testing for Intermittent Conditions and Poor Connections on page 11-877*
- *Wiring Repairs on page 11-883*

DTC Type Reference

Powertrain Diagnostic Trouble Code (DTC) Type Definitions on page 6-92

Scan Tool Reference

Control Module References on page 6-3 for scan tool information

Circuit/System Testing

P0D43 or P0D44

1. Vehicle OFF and all vehicle systems OFF. It may take up to 2 minutes for all vehicle systems to power down. Disconnect the X1 harness connector at the T18 Battery Charger.
2. Vehicle ON.
3. Test for greater than 12 V DC between the ignition circuit terminal A and ground.

⇒ **If less than 12 V**

3.1. Vehicle OFF and all vehicle systems OFF. It may take up to 2 minutes for all vehicle systems to power down. Disconnect the X2 harness connector at the T18 Battery Charger.

3.2. Test for infinite resistance between the B+ circuit terminal 2 and ground.

⇒ If less than infinite resistance, repair the short to ground on the circuit.

⇒ If infinite resistance, replace the T18 Battery Charger.

⇓ **If 12 V or greater**

4. Replace the T18 Battery Charger.

P0D45

Replace the T18 Battery Charger.

Repair Instructions

Perform the *Diagnostic Repair Verification on page 6-123* after completing the repair.

Control Module References on page 6-3 for T18 Battery Charger, often referred to as the Drive Motor Battery Charger, replacement, programming, and setup

DTC P0D57-P0D59

Diagnostic Instructions

- Perform the *Diagnostic System Check - Vehicle on page 6-91* prior to using this diagnostic procedure.
- Review *Strategy Based Diagnosis on page 6-83* for an overview of the diagnostic approach.
- *Diagnostic Procedure Instructions on page 6-84* provides an overview of each diagnostic category.

DTC Descriptors

DTC P0D57: Proximity Detection Circuit Performance
DTC P0D58: Proximity Detection Circuit Low Voltage
DTC P0D59: Proximity Detection Circuit High Voltage

Diagnostic Fault Information

Circuit	Short to Ground	Open/High Resistance	Short to Voltage	Signal Performance
AC Voltage Line 1	P1EE6	P1EE6	—	—
AC Voltage Line 2	P1EE6	P1EE6	—	—
AC Voltage Ground	1	P0D59	1	—
Control Pilot Signal	1	1	1	—
Proximity Signal	P0D57, P0D58	P0D57, P0D59	P0D57, P0D59	P0D57
1. Plug In Charging Indicator Malfunction				

Circuit/System Description

This diagnostic runs with the drive motor battery charger cable disconnected to verify the vehicle side circuit integrity. The hybrid/EV powertrain control module 2 uses a 5 V regulated signal through a 2700 Ω resistor to a low reference circuit in the battery charger to detect if the drive motor battery charger cable is attached.

Conditions for Running the DTC

DTC P0D57

- The vehicle 12 V battery system voltage is greater than 9 V.
- Digital communication is Enabled.
- DTCs P0D58 or P0D59 is not set

DTC P0D58 and P0D59

- The vehicle 12 V battery system voltage is greater than 9 V.
- The vehicle needs to be driven above 20 kph (12.5 mph).
- The vehicle is not in PARK.
- No vehicle speed DTCs are set.

Conditions for Setting the DTC

DTC P0D57

The hybrid/EV powertrain control module 2 measures a voltage greater than 3.4 V on the Proximity Detection circuit.

OR

The hybrid/EV powertrain control module 2 measures a voltage less than 1 V on the Proximity Detection circuit.

OR

The hybrid/EV powertrain control module 2 measures a voltage greater than 2 V and less than 2.2 V on the Proximity Detection circuit.

DTC P0D58

The hybrid/EV powertrain control module 2 measures a voltage less than 4.2 V for 1 second.

DTC P0D59

The hybrid/EV powertrain control module 2 measures a voltage greater than 4.8 V for 1 second.

Action Taken When the DTC Sets

- DTC P0D58 and P0D59 are type A DTCs.
- Disable the high voltage battery charging.

Conditions for Clearing the DTC

DTC P0D58 and P0D59 are type A DTCs.

Reference Information

Schematic Reference

Plug-In Charging Schematics on page 9-553

Connector End View Reference

Component Connector End Views on page 11-455

Description and Operation

Plug-In Charging System Description and Operation on page 9-657

Electrical Information Reference

- *Circuit Testing on page 11-871*
- *Connector Repairs on page 11-895*
- *Testing for Intermittent Conditions and Poor Connections on page 11-877*
- *Wiring Repairs on page 11-883*

DTC Type Reference

Powertrain Diagnostic Trouble Code (DTC) Type Definitions on page 6-92

Scan Tool Reference

Control Module References on page 6-3 for scan tool information

Special Tools

EL-48900 HEV Safety Kit

For equivalent regional tools, refer to *Special Tools on page 9-658*.

Circuit/System Testing

Danger: Always perform the High Voltage Disabling procedure prior to servicing any High Voltage component or connection. Personal Protection Equipment (PPE) and proper procedures must be followed.

The High Voltage Disabling procedure includes the following steps:

- ***Identify how to disable high voltage.***
- ***Identify how to test for the presence of high voltage.***
- ***Identify condition under which high voltage is always present and personal protection equipment (PPE) and proper procedures must be followed.***

Before working on any high voltage system, be sure to wear the following Personal Protection Equipment:

- ***Safety glasses with appropriate side shields when within 15 meters (50 feet) of the vehicle, either indoors or outdoors.***
- ***Certified and up-to-date Class "0" Insulation gloves rated at 1000V with leather protectors.***
  - ***Visually and functionally inspect the gloves before use.***
  - ***Wear the Insulation gloves with leather protectors at all times when working with the high voltage battery assembly, whether the system is energized or not.***

Failure to follow the procedures may result in serious injury or death.

1. Vehicle OFF, disable the high voltage. Refer to *High Voltage Disabling on page 9-363*

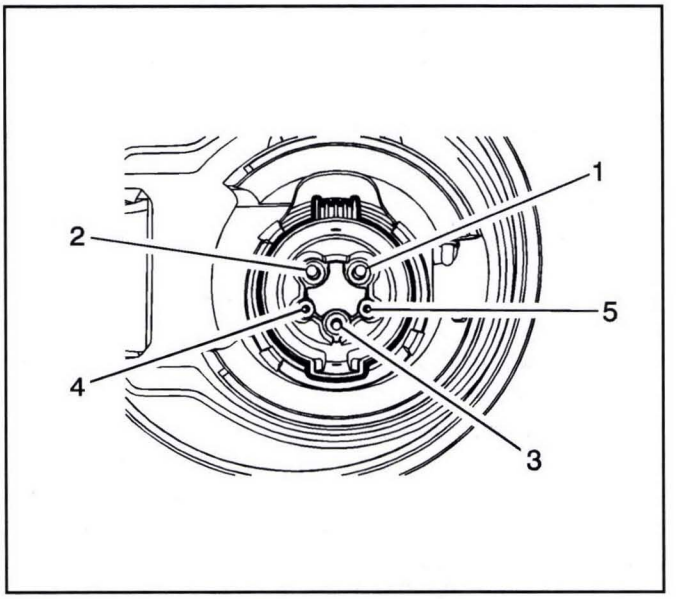

3549493

Note: The following tests are performed at the X98 Hybrid/EV Battery Charger Receptacle and not at the harness connector to the X98 Hybrid/EV Battery Charger Receptacle.

2. Test for less than 10 Ω between the terminal 3 and ground.

⇒ **If 10 Ω or greater**

2.1. Test for less than 2 Ω the ground circuit end to end.

⇒ If 2 Ω or greater, replace the high voltage cables.

⇒ If less than 2 Ω, repair the open/high resistance in the ground connection.

⇓ **If less than 10 Ω**

3. Test for 2.565–2.835K Ω between the signal circuit terminal 5 and the ground circuit terminal 3.

⇒ **If not within the specified range**

Replace the X98 Hybrid/EV Battery Charger Receptacle.

⇓ **If within the specified range**

4. Connect the 12 V battery. Vehicle in Service Mode.

5. Test for 4.2–4.8 V between the proximity signal circuit terminal 5 and ground.

⇒ **If less than 4.2 V**

5.1. Vehicle OFF, disconnect the X2 harness connector at the K114B Hybrid/EV Powertrain Control Module 2.

5.2. Test for infinite resistance between the signal circuit terminal 5 and ground.

⇒ If less than infinite resistance, repair the short to ground in the circuit.

⇓ If infinite resistance

5.3. Test for less than 2 Ω the signal circuit end to end.

⇒ If 2 Ω or greater, repair the open/high resistance in the circuit.

⇒ If less than 2 Ω, replace the K114B Hybrid/EV Powertrain Control Module 2.

⇓ **If greater than 4.8 V**

5.1. Vehicle OFF, disconnect the X2 harness connector at the K114B Hybrid/EV Powertrain Control Module 2. Vehicle in Service Mode.

5.2. Test for less than 1.0 V between the signal circuit terminal 5 and ground.

⇒ If 1.0 V or greater, repair the short to voltage in the circuit.

⇒ If less than 1.0 V, replace the K114B Hybrid/EV Powertrain Control Module 2.

⇓ **If between 4.2–4.8 V**

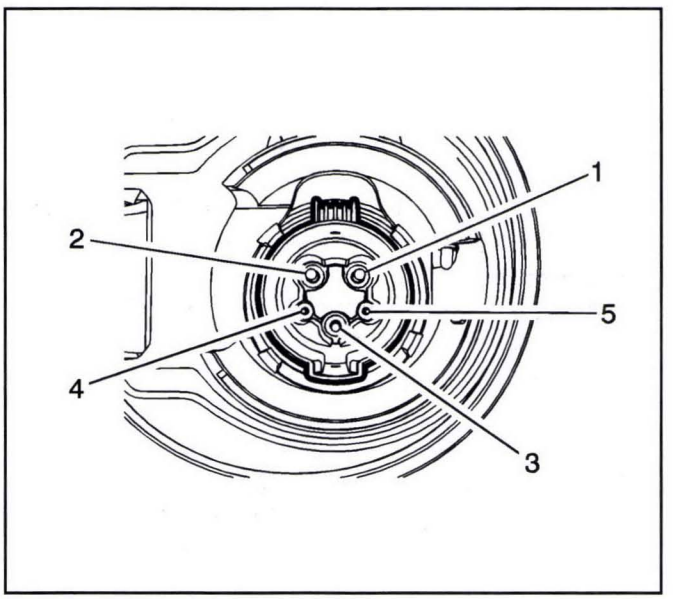

3549493

Note: The following tests are performed at the X98 Hybrid/EV Battery Charger Receptacle and not at the harness connector to the X98 Hybrid/EV Battery Charger Receptacle.

6. Test for infinite resistance between control pilot signal circuit terminal 5 of the X98 Hybrid/EV Battery Charger Receptacle and the terminals listed below;
   - Terminal 1
   - Terminal 2
   - Terminal 4

⇒ **If less than infinite resistance**

Repair the short between the circuits.

⇓ **If less than infinite resistance**

7. Replace the K114B Hybrid/EV Powertrain Control Module 2.

Repair Instructions

Perform the *Diagnostic Repair Verification on page 6-123* after completing the repair.

- *Drive Motor Battery Charger Receptacle Replacement (Without quick charge) on page 9-652* or *Drive Motor Battery Charger Receptacle Replacement (With quick charge) on page 9-654*
- *300-Volt Battery Positive and Negative Cable Replacement (Drive Motor Generator Power Inverter Module to Drive Motor Battery) on page 9-454* or *300-Volt Battery Positive and Negative Cable Replacement (Drive Motor Generator Power Inverter Module to High Voltage Battery Disconnect Module) on page 9-457*
- *Control Module References on page 6-3* for hybrid/EV powertrain control module 2 replacement, programming and setup.

DTC P0D5B, P0D5C, P1ECE, or P1EFD

Diagnostic Instructions

- Perform the *Diagnostic System Check - Vehicle on page 6-91* prior to using this diagnostic procedure.
- Review *Strategy Based Diagnosis on page 6-83* for an overview of the diagnostic approach.
- *Diagnostic Procedure Instructions on page 6-84* provides an overview of each diagnostic category.

DTC Descriptors

DTC P0D5B: Battery Charger 14V Output Power Performance
DTC P0D5C: Battery Charger Hybrid/EV Battery Output Power Performance
DTC P1ECE: Battery Charger Total Output Power Performance
DTC P1EFD: Battery Charger Power Efficiency

Circuit/System Description

The battery charger will diagnose its own systems and determine when a fault condition is present. Diagnostics and system status is communicated from the battery charger to the hybrid/EV powertrain control module 2 through serial data. The hybrid/EV powertrain control module 2 is the host controller for DTC information.

Conditions for Running the DTC

P0D5B, P0D5C, P1ECE, and P1EFD

- The vehicle 12 V battery system voltage needs to be above 9 V.
- The vehicle is connected to an AC supply and the battery charger is charging.
- No out of range DTCs are present on any of the battery charger current or voltage sensors.

P1EFD

The battery charger needs to be charging at a minimum of 3 A high voltage DC current.

Conditions for Setting the DTC

The battery charger calculates a power output not within the proper range for 2 seconds.

Action Taken When the DTC Sets

- DTC P0D5B, P0D5C and P1ECE are type A DTCs.
- DTC P1EFD is a type B DTC.
- Disables the high voltage battery charging.

Conditions for Clearing the DTC

- DTC P0D5B, P0D5C and P1ECE are type A DTCs.
- DTC P1EFD is a type B DTC.

Diagnostic Aids

A possible cause of this DTC could be a faulty 14 V power module.

Reference Information

Schematic Reference

Plug-In Charging Schematics on page 9-553

Connector End View Reference

Component Connector End Views on page 11-455

Description and Operation

Plug-In Charging System Description and Operation on page 9-657

Electrical Information Reference

- *Circuit Testing on page 11-871*
- *Connector Repairs on page 11-895*
- *Testing for Intermittent Conditions and Poor Connections on page 11-877*
- *Wiring Repairs on page 11-883*

DTC Type Reference

Powertrain Diagnostic Trouble Code (DTC) Type Definitions on page 6-92

Scan Tool Reference

Control Module References on page 6-3 for scan tool information

Circuit/System Testing

1. Verify no other battery charger DTCs are set.

⇒ **If any other battery charger DTCs are set**

Refer to *Diagnostic Trouble Code (DTC) List - Vehicle on page 6-92*.

⇓ **If no other battery charger DTCs are set**

2. Vehicle OFF. Wait 2 minutes for C1 Battery voltage to stabilize.
3. Test for 12.4–12.8 V between the C1 Battery terminals.

⇒ **If not within the specified range**

Refer to *Battery Inspection/Test on page 9-15*.

⇓ **If within the specified range**

4. Vehicle in Service Mode, accessories OFF.

5. Test the C1 Battery for at least 1 V greater than the voltage measured in step 3 but less than 15 V.

⇒ **If not within the specified range**

Refer to *DC Power Conversion Test on page 9-169*.

⇓ **If within the specified range**

6. Replace the T18 Battery Charger.

Repair Instructions

Perform the *Diagnostic Repair Verification on page 6-123* after completing the repair.

Control Module References on page 6-3 for T18 Battery Charger, often referred to as the Drive Motor Battery Charger, replacement, programming, and setup.

DTC P0D5E

Diagnostic Instructions

- Perform the *Diagnostic System Check - Vehicle on page 6-91* prior to using this diagnostic procedure.
- Review *Strategy Based Diagnosis on page 6-83* for an overview of the diagnostic approach.
- *Diagnostic Procedure Instructions on page 6-84* provides an overview of each diagnostic category.

DTC Descriptor

DTC P0D5E: Battery Charger System High Voltage Present

Circuit/System Description

The hybrid/EV battery energy control module will diagnose its own systems and determine when a fault condition is present. Diagnostics and system status is communicated from the hybrid/EV battery energy control module to the hybrid/EV powertrain control module 2 through serial data. The hybrid/EV powertrain control module 2 is the host controller for diagnostic trouble code (DTC) information.

The hybrid/EV battery contains 5 high voltage contactors and 2 transistors. The high voltage contactors allow the high voltage DC batteries to be connected to the vehicle or safely contain the high voltage DC within the hybrid/EV battery assembly. The 5 high voltage contactors are a main positive high voltage contactor, main negative high voltage contactor, charge positive high voltage contactor, charge negative high voltage contactor, and multi-function high voltage contactor. The 2 transistors are the precharge transistor and heater transistor. These contactors/transistors close and open in sequence and are controlled by the hybrid/EV powertrain control module 2. The hybrid/EV powertrain control module 2 supplies voltage to the control circuit for the high voltage contactors/transistors. Ground is provided through the case ground.

Conditions for Running the DTC

P0D5E

- The charger contactors are commanded open.
- Runs once per charger contacts discharge event.

  OR
- No confirmed charger bus discharge test pass or fail received by the hybrid/EV powertrain control module 2 from the battery charger control module.
- This test runs every 10 seconds after charger discharge event if no confirmed charger bus discharge result is received by the hybrid/EV powertrain control module 2 from the battery charger control module.

Conditions for Setting the DTC

P0D5E

- High voltage bus does not discharge to below 60 V within 1.5 seconds of the charger contactors being commanded open.

  OR
- High voltage bus does not discharge to below 60 V within 6.75 seconds of the charger contactors being commanded open.
- DTC U185C is set.

Action Taken When the DTC Sets

- DTC P0D5E is a type A DTC.
- All of the contactors will be prevented from closing.

Conditions for Clearing the DTC

- DTC P0D5E is a type A DTC.
- The *Clear Secured High Voltage DTCs on page 9-539* reset function must be performed with a scan tool before clear codes.

Diagnostic Aids

The precharge time can be affected by the following:

- A long precharge time may be caused by a stuck closed hybrid/EV battery charger negative, hybrid/EV battery charger positive or hybrid/EV battery multifunction contactor.
- A failure of the high impedance discharge circuit within the battery charger.

Reference Information

Schematic Reference

Hybrid/EV Energy Storage Schematics on page 9-348

Connector End View Reference

Component Connector End Views on page 11-455

Description and Operation

Drive Motor Battery System Description on page 9-545

Electrical Information Reference

- *Circuit Testing on page 11-871*
- *Connector Repairs on page 11-895*
- *Testing for Intermittent Conditions and Poor Connections on page 11-877*
- *Wiring Repairs on page 11-883*

DTC Type Reference

Powertrain Diagnostic Trouble Code (DTC) Type Definitions on page 6-92

Scan Tool Reference

Control Module References on page 6-3 for scan tool information

Special Tools

- *EL-48900* HEV Safety Kit
- *EL-51099* Low Voltage Jumper Harness Extension

For equivalent regional tools, refer to *Special Tools on page 9-658*.

Circuit/System Verification

1. Verify that DTC P0AA1, P0AD9, P0ADD, P0AE2, P0AE4, P0D0A, P0D11, P1EBC, P1EBE-P1EBF, P1EC0, or P1EC3-P1EC5 is not set.

⇒ **If any of the DTCs are set**

Refer to *Diagnostic Trouble Code (DTC) List - Vehicle on page 6-92*

⇓ **None of the DTCs are set**

Note: The following setup steps MUST BE PERFORMED EXACTLY in order to exercise the contactors.

2. Vehicle OFF. Turn ON the park lamps.

   Note:

   - **DO NOT** press the power button and enter Vehicle in Service Mode.
   - Ignore P0ABC after pulling the S15 Manual Service Disconnect.
3. Command the Hybrid/EV Battery Contactors ALL OPEN with a scan tool.
4. Disconnect the S15 Manual Service Disconnect.

   Note:

   - **DO NOT** use the Release Control button to turn OFF any of the contactors. Once the Release Control button is pushed the Circuit/System Verification will need to be restarted from the beginning.
   - The following steps can be performed in any sequence or a single contactor can be exercised to verify a complaint.
5. Command the Hybrid/EV Battery Charging System Negative Contactor CLOSED and ALL OPEN with a scan tool while listening for the contactor to close and open. The Hybrid/EV Battery Charging System Negative Contactor should be heard closing and opening.

   ⇒ If the Hybrid/EV Battery Charging System Negative Contactor is not heard opening and closing, refer to Hybrid/EV Battery Charging System Negative Contactor Diagnosis.
6. Command the Hybrid/EV Battery Charging System Positive Contactor OPEN and CLOSED with a scan tool while listening for the contactor to open and close. The Hybrid/EV Battery Charging System Positive Contactor should be heard opening and closing.

   ⇒ If the Hybrid/EV Battery Charging System Positive Contactor is not heard opening and closing, refer to Hybrid/EV Battery Charging System Positive Contactor Diagnosis.
7. Command the Hybrid/EV Battery Multifunction Contactor OPEN and CLOSED with a scan tool while listening for the contactor to open and close. The Hybrid/EV Battery Multifunction Contactor should be heard opening and closing.

   ⇒ If the Hybrid/EV Battery Multifunction Contactor is not heard opening and closing, refer to Hybrid/EV Battery Multifunction Contactor Diagnosis.
8. If all contactors are heard opening and closing, replace the T18 battery charger.

Circuit/System Testing

Danger: Always perform the High Voltage Disabling procedure prior to servicing any High Voltage component or connection. Personal Protection Equipment (PPE) and proper procedures must be followed.

The High Voltage Disabling procedure includes the following steps:

- ***Identify how to disable high voltage.***
- ***Identify how to test for the presence of high voltage.***
- ***Identify condition under which high voltage is always present and personal protection equipment (PPE) and proper procedures must be followed.***

Before working on any high voltage system, be sure to wear the following Personal Protection Equipment:

- ***Safety glasses with appropriate side shields when within 15 meters (50 feet) of the vehicle, either indoors or outdoors.***
- ***Certified and up-to-date Class "0" Insulation gloves rated at 1000V with leather protectors.***
  - ***Visually and functionally inspect the gloves before use.***
  - ***Wear the Insulation gloves with leather protectors at all times when working with the high voltage battery assembly, whether the system is energized or not.***

Failure to follow the procedures may result in serious injury or death.

Battery Charging System Negative Contactor

Note: The Battery Pack will utilize an exchange program. Please consult the most recent revision of bulletin/PI #PIP5112, available in Service Information (SI), for a list of approved Battery Pack service procedures. Components that may be removed and serviced without exchanging the

complete battery pack are identified in the bulletin/PI. Please contact the GM Technical Assistance Center if you have any questions.

1. Vehicle OFF, remove the Underbody Front Air Deflector Replacement Center. Refer to *Underbody Front Air Deflector Replacement (Center) on page 3-126*. Disconnect the X358 harness connector at the A4 Hybrid/EV Battery Pack.
2. Test for less than 10 Ω between the ground circuit terminal 5 and ground.

⇒ **If 10 Ω or greater**

2.1. Vehicle OFF.

2.2. Test for less than 2 Ω in the ground circuit end to end.

⇒ If 2 Ω or greater, repair the open/high resistance in the circuit.

⇒ If less than 2 Ω, repair the open/high resistance in the ground connection.

⇓ **If less than 10 Ω**

3. Vehicle in Service Mode.
4. Test for less than 1 V between the control circuit 11 and ground.

⇒ **If 1 V or greater**

4.1. Vehicle OFF, disconnect the X1 harness connector at the K114B Hybrid Powertrain Control Module 2. Vehicle in Service Mode.

4.2. Test for less than 1 V between the control circuit and ground.

⇒ If 1 V or greater, repair the short to voltage on the circuit.

⇒ If less than 1 V, replace the K114B Hybrid Powertrain Control Module 2.

⇓ **If less than 1 V**

5. Vehicle OFF, install the *EL-51099* Low Voltage Jumper Harness Extension

   Note: The following setup steps MUST BE PERFORMED EXACTLY in order to exercise the contactor.

6. Vehicle OFF, turn ON the park lamps.

   Note:

   - **DO NOT** press the power button and enter Vehicle in Service Mode.
   - Ignore P0ABC after pulling the S15 Manual Service Disconnect.

7. Command the Hybrid/EV Battery Contactors ALL OPEN with a scan tool.
8. Disconnect the S15 Manual Service Disconnect. Disconnect the *EL-51099* Low Voltage Jumper Harness Extension from the X358 harness connector at the A4 Hybrid/EV Battery Pack. Connect a test lamp between the control circuit terminal 11 and ground.

   Note: DO NOT use the Release Control button to turn OFF any of the contactors. Once the Release Control button is pushed the setup steps will need to be restarted from the beginning.

9. Command the Hybrid/EV Battery Charger Negative Contactor CLOSED and ALL OPEN with a scan tool. Verify that the test lamp turns ON and OFF.

⇒ **If the test lamp does not turn ON and OFF**

9.1. Vehicle OFF, remove the test lamp. Disconnect the X1 harness connector at the K114B Hybrid Powertrain Control Module 2. Vehicle in Service Mode.

9.2. Test for infinite resistance between control circuit and ground.

⇒ If less than infinite resistance, repair the short to ground on the circuit.

⇓ If infinite resistance

9.3. Test for less than 2 Ω in the control circuit end to end.

⇒ If 2 Ω or greater, repair the open/high resistance in the circuit.

⇒ If less than 2 Ω, replace the K114B Hybrid Powertrain Control Module 2.

⇓ **If the test lamp does turn ON and OFF**

Note: The EL-51099 Low Voltage Jumper Harness Extension X357 Black connector should still be connected between the vehicle and the A4 Hybrid/EV Battery Pack.

10. Remove the test lamp, Vehicle in Service Mode.
11. Test for less than 1 V between the control circuit 11 and ground at the A4 Hybrid/EV Battery Pack.

⇒ **If 1 V or greater**

Replace the A4 Hybrid/EV Battery Pack.

⇓ **If less than 1 V**

12. Vehicle OFF, remove the Drive Motor Battery Cover. Refer to *Drive Motor Battery Cover Replacement on page 9-449*
13. Disconnect the X359 harness connector at the A28 Hybrid/EV Battery Contactor Assembly.
14. Test for infinite resistance between control circuit 11 X358 and ground circuit terminal 5.

⇒ **If less than infinite resistance**

Replace the A4 Hybrid/EV Battery Pack.

⇓ **If infinite resistance**

15. Test for less than 2 Ω in the control circuit end to end.

⇒ **If 2 Ω or greater**

Replace the A4 Hybrid/EV Battery Pack.

⇓ **If less than 2 Ω**

16. Replace the A28 Hybrid/EV Battery Contactor Assembly.

Battery Charging System Positive Contactor

Note: The Battery Pack will utilize an exchange program. Please consult the most recent revision of bulletin/PI #PIP5112, available in Service Information (SI), for a list of approved Battery Pack service procedures. Components that may be removed and serviced without exchanging the

complete battery pack are identified in the bulletin/PI. Please contact the GM Technical Assistance Center if you have any questions.

1. Vehicle OFF, remove the Underbody Front Air Deflector Replacement Center. Refer to*Underbody Front Air Deflector Replacement (Center) on page 3-126*. Disconnect the X358 harness connector at the A4 Hybrid/EV Battery Pack.
2. Test for less than 10 Ω between the ground circuit terminal 5 and ground.

⇒ **If 10 Ω or greater**

2.1. Vehicle OFF.

2.2. Test for less than 2 Ω in the ground circuit end to end.

⇒ If 2 Ω or greater, repair the open/high resistance in the circuit.

⇒ If less than 2 Ω, repair the open/high resistance in the ground connection.

⇓ **If less than 10 Ω**

3. Vehicle in Service Mode.
4. Test for less than 1 V between the control circuit 12 and ground.

⇒ **If 1 V or greater**

4.1. Vehicle OFF, disconnect the X1 harness connector at the K114B Hybrid Powertrain Control Module 2. Vehicle in Service Mode.

4.2. Test for less than 1 V between the control circuit and ground.

⇒ If 1 V or greater, repair the short to voltage on the circuit.

⇒ If less than 1 V, replace the K114B Hybrid Powertrain Control Module 2.

⇓ **If less than 1 V**

5. Vehicle OFF, install the *EL-51099* Low Voltage Jumper Harness Extension

   Note: The following setup steps MUST BE PERFORMED EXACTLY in order to exercise the contactor.

6. Vehicle OFF, turn ON the park lamps.

   Note:

   - **DO NOT** press the power button and enter Vehicle in Service Mode.
   - Ignore P0ABC after pulling the S15 Manual Service Disconnect.

7. Command the Hybrid/EV Battery Contactors ALL OPEN with a scan tool.
8. Disconnect the S15 Manual Service Disconnect. Disconnect the *EL-51099* Low Voltage Jumper Harness Extension from the X358 harness connector at the A4 Hybrid/EV Battery Pack. Connect a test lamp between the control circuit terminal 12 and ground.

   Note: DO NOT use the Release Control button to turn OFF any of the contactors. Once the Release Control button is pushed the setup steps will need to be restarted from the beginning.

9. Command the Hybrid/EV Battery Charger Positive Contactor CLOSED and ALL OPEN with a scan tool. Verify that the test lamp turns ON and OFF.

⇒ **If the test lamp does not turn ON and OFF**

9.1. Vehicle OFF, remove the test lamp. Disconnect the X1 harness connector at the K114B Hybrid Powertrain Control Module 2. Vehicle in Service Mode.

9.2. Test for infinite resistance between control circuit and ground.

⇒ If less than infinite resistance, repair the short to ground on the circuit.

⇓ If infinite resistance

9.3. Test for less than 2 Ω in the control circuit end to end.

⇒ If 2 Ω or greater, repair the open/high resistance in the circuit.

⇒ If less than 2 Ω, replace the K114B Hybrid Powertrain Control Module 2.

⇓ **If the test lamp does turn ON and OFF**

Note: The EL-51099 Low Voltage Jumper Harness Extension X357 Black connector should still be connected between the vehicle and the A4 Hybrid/EV Battery Pack.

10. Remove the test lamp, Vehicle in Service Mode.
11. Test for less than 1 V between the control circuit 12 and ground at the A4 Hybrid/EV Battery Pack.

⇒ **If 1 V or greater**

Replace the A4 Hybrid/EV Battery Pack.

⇓ **If less than 1 V**

12. Vehicle OFF, remove the Drive Motor Battery Cover. Refer to *Drive Motor Battery Cover Replacement on page 9-449*
13. Disconnect the X359 harness connector at the A28 Hybrid/EV Battery Contactor Assembly.
14. Test for infinite resistance between control circuit 12 X358 and ground circuit terminal 5.

⇒ **If less than infinite resistance**

Replace the A4 Hybrid/EV Battery Pack.

⇓ **If infinite resistance**

15. Test for less than 2 Ω in the control circuit end to end.

⇒ **If 2 Ω or greater**

Replace the A4 Hybrid/EV Battery Pack.

⇓ **If less than 2 Ω**

16. Replace the A28 Hybrid/EV Battery Contactor Assembly.

Battery Charging System Multifunction Contactor

Note: The Battery Pack will utilize an exchange program. Please consult the most recent revision of bulletin/PI #PIP5112, available in Service Information (SI), for a list of approved Battery Pack service procedures. Components that may be removed and serviced without exchanging the

complete battery pack are identified in the bulletin/ PI. Please contact the GM Technical Assistance Center if you have any questions.

1. Vehicle OFF, remove the Underbody Front Air Deflector Replacement Center. Refer to *Underbody Front Air Deflector Replacement (Center) on page 3-126*. Disconnect the X358 harness connector at the A4 Hybrid/EV Battery Pack.
2. Test for less than 10 Ω between the ground circuit terminal 5 and ground.

⇒ **If 10 Ω or greater**

2.1. Vehicle OFF.

2.2. Test for less than 2 Ω in the ground circuit end to end.

⇒ If 2 Ω or greater, repair the open/high resistance in the circuit.

⇒ If less than 2 Ω, repair the open/high resistance in the ground connection.

⇓ **If less than 10 Ω**

3. Vehicle in Service Mode.
4. Test for less than 1 V between the control circuit 8 and ground.

⇒ **If 1 V or greater**

4.1. Vehicle OFF, disconnect the X1 harness connector at the K114B Hybrid Powertrain Control Module 2. Vehicle in Service Mode.

4.2. Test for less than 1 V between the control circuit and ground.

⇒ If 1 V or greater, repair the short to voltage on the circuit.

⇒ If less than 1 V, replace the K114B Hybrid Powertrain Control Module 2.

⇓ **If less than 1 V**

5. Vehicle OFF, install the *EL-51099* Low Voltage Jumper Harness Extension

   Note: The following setup steps MUST BE PERFORMED EXACTLY in order to exercise the contactor.

6. Vehicle OFF, turn ON the park lamps.

   Note:

   - **DO NOT** press the power button and enter Vehicle in Service Mode.
   - Ignore P0ABC after pulling the S15 Manual Service Disconnect.

7. Command the Hybrid/EV Battery Contactors ALL OPEN with a scan tool.
8. Disconnect the S15 Manual Service Disconnect. Disconnect the *EL-51099* Low Voltage Jumper Harness Extension from the X358 harness connector at the A4 Hybrid/EV Battery Pack. Connect a test lamp between the control circuit terminal 8 and ground.

   Note: DO NOT use the Release Control button to turn OFF any of the contactors. Once the Release Control button is pushed the setup steps will need to be restarted from the beginning.

9. Command the Hybrid/EV Battery Multifunction Contactor CLOSED and ALL OPEN with a scan tool. Verify that the test lamp turns ON and OFF.

⇒ **If the test lamp does not turn ON and OFF**

9.1. Vehicle OFF, remove the test lamp. Disconnect the X1 harness connector at the K114B Hybrid Powertrain Control Module 2. Vehicle in Service Mode.

9.2. Test for infinite resistance between control circuit and ground.

⇒ If less than infinite resistance, repair the short to ground on the circuit.

⇓ If infinite resistance

9.3. Test for less than 2 Ω in the control circuit end to end.

⇒ If 2 Ω or greater, repair the open/high resistance in the circuit.

⇒ If less than 2 Ω, replace the K114B Hybrid Powertrain Control Module 2.

⇓ **If the test lamp does turn ON and OFF**

Note: The EL-51099 Low Voltage Jumper Harness Extension X357 Black connector should still be connected between the vehicle and the A4 Hybrid/EV Battery Pack.

10. Remove the test lamp, Vehicle in Service Mode.
11. Test for less than 1 V between the control circuit 8 and ground at the A4 Hybrid/EV Battery Pack.

⇒ **If 1 V or greater**

Replace the A4 Hybrid/EV Battery Pack.

⇓ **If less than 1 V**

12. Vehicle OFF, remove the Drive Motor Battery Cover. Refer to *Drive Motor Battery Cover Replacement on page 9-449*
13. Disconnect the X359 harness connector at the A28 Hybrid/EV Battery Contactor Assembly.
14. Test for infinite resistance between control circuit 8 X358 and ground circuit terminal 5.

⇒ **If less than infinite resistance**

Replace the A4 Hybrid/EV Battery Pack.

⇓ **If infinite resistance**

15. Test for less than 2 Ω in the control circuit end to end.

⇒ **If 2 Ω or greater**

Replace the A4 Hybrid/EV Battery Pack.

⇓ **If less than 2 Ω**

16. Replace the A28 Hybrid/EV Battery Contactor Assembly.

Repair Instructions

Perform the *Diagnostic Repair Verification on page 6-123* after completing the repair.

- *Drive Motor Battery Positive High Voltage Contactor Relay Replacement on page 9-499*
- *Drive Motor Battery Replacement and Shipping Preparation on page 9-524*
- *Control Module References on page 6-3* for hybrid/EV powertrain control module 2 replacement, programming and setup.

DTC P1EE6

Diagnostic Instructions

- Perform the *Diagnostic System Check - Vehicle on page 6-91* prior to using this diagnostic procedure.
- Review *Strategy Based Diagnosis on page 6-83* for an overview of the diagnostic approach.
- *Diagnostic Procedure Instructions on page 6-84* provides an overview of each diagnostic category.

DTC Descriptors

DTC P1EE6: Battery Charger AC Voltage Not Present

Diagnostic Fault Information

Circuit	Short to Ground	Open/High Resistance	Short to Voltage	Signal Performance
AC Voltage Line 1	P1EE6	P1EE6	—	—
AC Voltage Line 2	P1EE6	P1EE6	—	—
AC Voltage Ground	1	P0D59	1	—
1. Plug In Charging Malfunction				

Circuit/System Description

The hybrid battery charger receptacle is connected to the battery charger through two 110/220 V AC circuits and one ground circuit. The battery charger receives serial data message from the hybrid powertrain control module 2 that the drive motor battery charger cable has been connected and then monitors the two 110/220 V AC circuits for proper voltage.

Conditions for Running the DTC

- The vehicle 12 V battery system voltage is greater than 9 V.
- The drive motor battery charger cable is connected.
- The A/C is requested ON for greater than or equal to 4 sec.
- None of the following DTCs P0D3F, P0D40, P1EE7, P1EE8, P0D3E, P1ECE, P0D5C, P0D5B, P16C4, or P1EFD are set.

Conditions for Setting the DTC

The battery Charger AC input Voltage is less than or equal to 5 V.

Action Taken When the DTC Sets

- DTC P1EE6 is a type A DTC.
- Disables the vehicle high voltage battery charging.

Conditions for Clearing the DTC

DTC P1EE6 is a type A DTC.

Reference Information

Schematic Reference

Plug-In Charging Schematics on page 9-553

Connector End View Reference

Component Connector End Views on page 11-455

Description and Operation

Plug-In Charging System Description and Operation on page 9-657

Electrical Information Reference

- *Circuit Testing on page 11-871*
- *Connector Repairs on page 11-895*
- *Testing for Intermittent Conditions and Poor Connections on page 11-877*
- *Wiring Repairs on page 11-883*

DTC Type Reference

Powertrain Diagnostic Trouble Code (DTC) Type Definitions on page 6-92

Scan Tool Reference

Control Module References on page 6-3 for scan tool information

Special Tools

- *EL-48900* HEV Safety Kit
- *EL-50772* Insulation Multimeter

For equivalent regional tools, refer to *Special Tools on page 9-658*

Circuit/System Verification

1. Clear DTC, connect a known good drive motor battery charger cable to vehicle and household supply voltage.
2. Verify DTC P1EE6 is set.

⇒ **If DTC P1EE6 is not set**

Replace customer's drive motor battery charger cable.

⇓ **If DTC P1EE6 is set**

3. Disconnect the drive motor battery charger cable. Refer to Circuit/System Testing.

Circuit/System Testing

Danger: Always perform the High Voltage Disabling procedure prior to servicing any High Voltage component or connection. Personal Protection Equipment (PPE) and proper procedures must be followed.

The High Voltage Disabling procedure includes the following steps:

- ***Identify how to disable high voltage.***
- ***Identify how to test for the presence of high voltage.***
- ***Identify condition under which high voltage is always present and personal protection equipment (PPE) and proper procedures must be followed.***

Before working on any high voltage system, be sure to wear the following Personal Protection Equipment:

- ***Safety glasses with appropriate side shields when within 15 meters (50 feet) of the vehicle, either indoors or outdoors.***
- ***Certified and up-to-date Class "0" Insulation gloves rated at 1000V with leather protectors.***
  - ***Visually and functionally inspect the gloves before use.***
  - ***Wear the Insulation gloves with leather protectors at all times when working with the high voltage battery assembly, whether the system is energized or not.***

Failure to follow the procedures may result in serious injury or death.

1. Vehicle OFF, disable the high voltage. Refer to *High Voltage Disabling on page 9-363*. Disconnect X3 connector at the T18 Battery Charger.

   Note: The following continuity tests must be performed using the EL-50772 Insulation Multimeter. Select the Isolation test setting, then select the 500 V range.

2. Using the EL-50772 Insulation Multimeter test for greater than 1M Ω between the circuit terminals listed below and ground;
   - T18 Battery Charger terminal A X3
   - T18 Battery Charger terminal C X3

⇒ **If less than 1M Ω**

Replace the high voltage cables.

⇓ **If 1M Ω or greater**

3. Test for greater than 1M Ω between the harness connector terminal A and terminal C X3.

⇒ **If less than 1M Ω**

Replace the high voltage cables.

⇓ **If 1M Ω or greater**

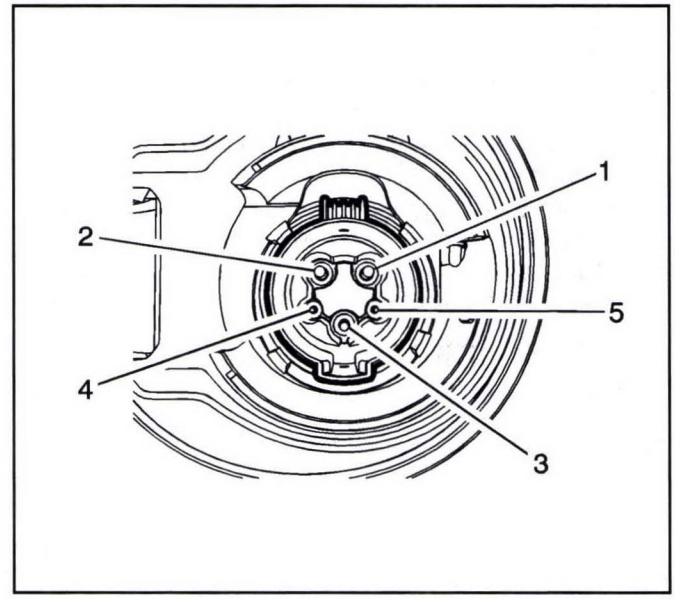

3549493

Note: The following continuity test must be performed using the Ohm test setting.

4. Test for less than 10 Ω between the high voltage circuit terminals listed below;
   - T18 Battery Charger terminal A X3 and X98 Hybrid/EV Battery Charger Receptacle 1
   - T18 Battery Charger terminal C X3 and X98 Hybrid/EV Battery Charger Receptacle 2

⇒ **If 10 Ω or greater**

Replace the high voltage cables.

4.1. Disconnect the harness connector to the X98 Hybrid/EV Battery Charger Receptacle.

4.2. Test for less than 2 Ω the 110/220 V AC circuit end to end.

⇒ If 2 Ω or greater, replace the high voltage cables.

⇒ If less than 2 Ω, replace the X98 Hybrid/EV Battery Charger Receptacle.

⇓ **If less than 10 Ω**

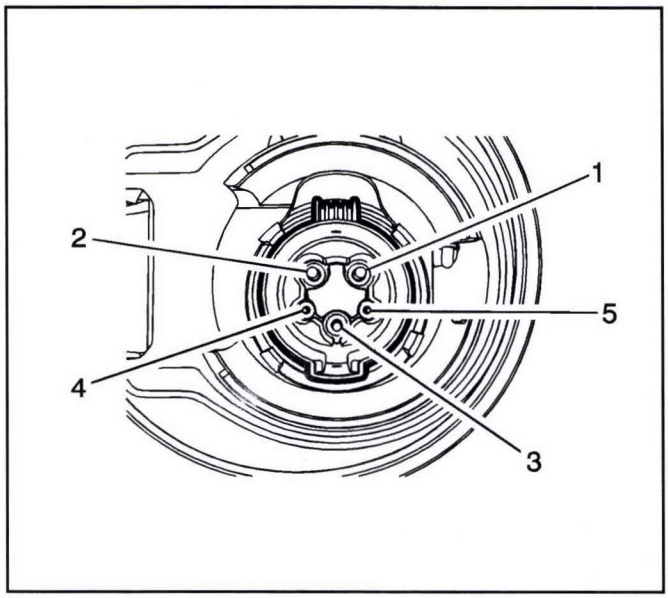

3549493

5. Test for less than 10 Ω between the high voltage circuit terminal 3 and ground.

⇒ **If 10 Ω or greater**

5.1. Vehicle OFF.

5.2. Test for less than 2 Ω in the ground circuit end to end.

⇒ If 2 Ω or greater, replace the high voltage cables.

⇒ If less than 2 Ω, repair the open/high resistance in the ground connection.

⇓ **If less than 10 Ω**

6. Replace the T18 Battery Charger.

Repair Instructions

Perform the *Diagnostic Repair Verification on page 6-123* after completing the repair.

- *Drive Motor Battery Charger Receptacle Replacement (Without quick charge) on page 9-652* or *Drive Motor Battery Charger Receptacle Replacement (With quick charge) on page 9-654*
- *300-Volt Battery Positive and Negative Cable Replacement (Drive Motor Generator Power Inverter Module to Drive Motor Battery) on page 9-454* or *300-Volt Battery Positive and Negative Cable Replacement (Drive Motor Generator Power Inverter Module to High Voltage Battery Disconnect Module) on page 9-457*
- *Control Module References on page 6-3* for battery charger replacement, programming and setup.

DTC P1EEF or P0D4A

Diagnostic Instructions

- Perform the *Diagnostic System Check - Vehicle on page 6-91* prior to using this diagnostic procedure.
- Review *Strategy Based Diagnosis on page 6-83* for an overview of the diagnostic approach.
- *Diagnostic Procedure Instructions on page 6-84* provides an overview of each diagnostic category.

DTC Descriptors

DTC P0D4A: Battery Charger 14V Output Current Sensor Circuit High Voltage

DTC P1EEF: Battery Charger 14V Converter Output Power Regulation Performance

Circuit/System Description

The battery charger, often referred to as the drive motor battery charger, 14 V output circuit is connected to the vehicle 12 V system. The battery charger monitors the 14 V output for proper current and voltage conditions. The battery charger has the ability to drive the voltage to 14 V.

Conditions for Running the DTC

- The vehicle 12 V battery system voltage is above 9 V.
- P0D44, P0D45, P0D49, P1EE9, or P1EEA should not be set.
- The vehicle is connected to an AC supply and the battery charger is charging.

Conditions for Setting the DTC

The battery charger actual 14 V output voltage or current is out of the allowable tolerance compared with the commanded output voltage or current. This is measured internal to the battery charger.

Action Taken When the DTC Sets

- DTC P1EEF and P0D4A are Type A DTCs.
- Disables the high voltage battery charging.

Conditions for Clearing the DTC

DTC P1EEF and P0D4A are Type A DTCs.

Diagnostic Aids

Connecting an external battery charger to vehicle while charging with drive motor battery charger cable can cause this DTC to set. Ensure customer did not have an external battery charger connected during plug-in charging attempt before proceeding with this diagnostic procedure

Reference Information

Schematic Reference

Plug-In Charging Schematics on page 9-553

Connector End View Reference

Component Connector End Views on page 11-455

Description and Operation

Plug-In Charging System Description and Operation on page 9-657

Electrical Information Reference

- *Circuit Testing on page 11-871*
- *Connector Repairs on page 11-895*
- *Testing for Intermittent Conditions and Poor Connections on page 11-877*
- *Wiring Repairs on page 11-883*

DTC Type Reference

Powertrain Diagnostic Trouble Code (DTC) Type Definitions on page 6-92

Scan Tool Reference

Control Module References on page 6-3 for scan tool information

Circuit/System Testing

1. Verify DTC P0D44, P0D45, P0D49, P1EE9, or P1EEA is not set.

⇒ **If any of the DTCs are set**

Refer to *Diagnostic Trouble Code (DTC) List - Vehicle on page 6-92*.

⇓ **If none of the DTCs are set**

2. Vehicle OFF. Wait 2 minutes for C1 Battery voltage to stabilize.
3. Test for 12.4–12.8 V between the C1 Battery terminals.

⇒ **If not within the specified range**

Refer to *Battery Inspection/Test on page 9-15*.

⇓ **If within the specified range**

4. Vehicle OFF, charger disconnected, all vehicle systems OFF. It may take up to 2 minutes for all vehicle systems to power down. Disconnect the X2 harness connector at the T18 Battery Charger.
5. Test for less than 10 Ω between the ground circuit terminal 1 and ground.

⇒ **If 10 Ω or greater**

Repair the open/high resistance in the circuit.

⇓ **If less than 10 Ω**

6. Verify a test lamp illuminates between the B+ circuit terminal 2 and ground.

⇒ **If the test lamp does not illuminate and the circuit fuse is good**

Test for less than 2 Ω in the B+ circuit end to end.

⇒ If 2 Ω or greater, repair the open/high resistance in the circuit.

⇒ If less than 2 Ω, verify the fuse is not open and there is voltage at the fuse.

⇒ **If the test lamp does not illuminate and the circuit fuse is open**

Test for infinite resistance between the B+ circuit and ground.

⇒ If less than infinite resistance, repair the short to ground on the circuit.

⇒ If infinite resistance, replace the T18 Battery Charger.

⇓ **If the test lamp illuminates**

7. Replace the T18 Battery Charger.

Repair Instructions

Perform the *Diagnostic Repair Verification on page 6-123* after completing the repair.

Control Module References on page 6-3 for T18 Battery Charger, often referred to as the Drive Motor Battery Charger, replacement, programming and setup.

DTC P1EF0 or P1EF1

Diagnostic Instructions

- Perform the *Diagnostic System Check - Vehicle on page 6-91* prior to using this diagnostic procedure.
- Review *Strategy Based Diagnosis on page 6-83* for an overview of the diagnostic approach.
- *Diagnostic Procedure Instructions on page 6-84* provides an overview of each diagnostic category.

DTC Descriptors

DTC P1EF0: Battery Charger High Voltage Converter 1 Output Power Regulation Performance

DTC P1EF1: Battery Charger High Voltage Converter 2 Output Power Regulation Performance

Circuit/System Description

The hybrid/EV powertrain control module 2 and battery charger control module monitor the battery charger high voltage output and current output and ensures it is in the proper range and there is not a resistive short in the charging bus.

Conditions for Running the DTC

P1EF0

- P0D53, P0D54, P0D4E, P0D4F, P1EEB, or P1EEC should not be set.
- The vehicle 12 V battery system voltage needs to be above 9 V.
- The vehicle is connected to a 120 V AC supply and the battery charger is converting power.

P1EF1

- P0D53, P0D54, P0D4E, P0D4F, P1EEB, or P1EEC should not be set.
- The vehicle 12 V battery system voltage needs to be above 9 V.
- The vehicle is connected to a 240 V AC supply and the battery charger is converting power.

Conditions for Setting the DTC

P1EF0 or P1EF1

The battery charger actual high voltage output voltage or current is out of the allowable tolerance compared with the commanded output voltage or current. This is measured internal to the battery charger.

Action Taken When the DTC Sets

DTC P1EF0 and P1EF1 are Type A DTCs.

Conditions for Clearing the DTC

DTC P1EF0 and P1EF1 are Type A DTCs.

Diagnostic Aids

Low or unstable household voltage supply can cause this DTC to set. Verify with customer that household voltage was not fluctuating during charge attempt and that they are using a dedicated circuit. Voltage fluctuations can be indicated by intermittent red LEDs on the drive motor battery charger cable.

Reference Information

Schematic Reference

Plug-In Charging Schematics on page 9-553

Connector End View Reference

Component Connector End Views on page 11-455

Description and Operation

Plug-In Charging System Description and Operation on page 9-657

Electrical Information Reference

- *Circuit Testing on page 11-871*
- *Connector Repairs on page 11-895*
- *Testing for Intermittent Conditions and Poor Connections on page 11-877*
- *Wiring Repairs on page 11-883*

DTC Type Reference

Powertrain Diagnostic Trouble Code (DTC) Type Definitions on page 6-92

Scan Tool Reference

Control Module References on page 6-3 for scan tool information

Special Tools

EL-48900 HEV Safety Kit

For equivalent regional tools, refer to *Special Tools on page 9-658*.

Circuit/System Testing

Danger: Always perform the High Voltage Disabling procedure prior to servicing any High Voltage component or connection. Personal Protection Equipment (PPE) and proper procedures must be followed.

The High Voltage Disabling procedure includes the following steps:

- ***Identify how to disable high voltage.***
- ***Identify how to test for the presence of high voltage.***

- ***Identify condition under which high voltage is always present and personal protection equipment (PPE) and proper procedures must be followed.***

Before working on any high voltage system, be sure to wear the following Personal Protection Equipment:

- ***Safety glasses with appropriate side shields when within 15 meters (50 feet) of the vehicle, either indoors or outdoors.***
- ***Certified and up-to-date Class "0" Insulation gloves rated at 1000V with leather protectors.***
  - ***Visually and functionally inspect the gloves before use.***
  - ***Wear the Insulation gloves with leather protectors at all times when working with the high voltage battery assembly, whether the system is energized or not.***

Failure to follow the procedures may result in serious injury or death.

1. Verify no battery-related DTCs are set.

⇒ **If any battery-related DTCs are set**

Refer to *Diagnostic Trouble Code (DTC) List - Vehicle on page 6-92* for hybrid battery diagnostics.

⇓ **If battery-related DTCs are not set**

2. Clear DTC, connect the drive motor battery charger cable to vehicle and known good household supply voltage.
3. Verify DTC P1EF0 or P1EF1 is set.

⇒ **If none of the DTCs are set**

Vehicle owner will have to attempt charge at home again. If the vehicle will not charge they will need electrical supply serviced.

⇓ **If any of the DTCs are set**

4. Vehicle OFF, disable the high voltage at the A4 Hybrid/EV Battery Pack and the T18 Battery Charger. Refer to *High Voltage Disabling on page 9-363*.
5. Disconnect the X4 connector at the T18 Battery Charger and at the X2 connector at the A4 Hybrid/EV Battery Pack.
6. Test for infinite resistance between the 300 V circuit terminals listed below and ground:
   - Terminal A X4
   - Terminal B X4

⇒ **If less than the specified range**

Test the 300 V circuit for a short to ground.

⇓ **If within specified range**

7. Test for less than 10 Ω between the 300 V circuit terminals listed below:
   - T18 Battery Charger terminal A X4 and A4 Hybrid/EV Battery Pack A X2
   - T18 Battery Charger terminal B X4 and A4 Hybrid/EV Battery Pack B X2

⇒ **If greater than the specified range**

Test the 300 V circuit for an open/high resistance.

⇓ **If within specified range**

8. Test for infinite resistance between the 300 V circuit terminal A X4 and B X4.

⇒ **If less than the specified range**

Test the 300 V circuits for a short between the circuits.

⇓ **If all circuits tests normal**

9. Replace the T18 Battery Charger.

Repair Instructions

Perform the *Diagnostic Repair Verification on page 6-123* after completing the repair.

- *Drive Motor Battery Charger Replacement on page 9-649*
- *Control Module References on page 6-3* for T18 Battery Charger, often referred to as the Drive Motor Battery Charger, replacement, programming, and setup.

DTC P1EF3-P1EF5

Diagnostic Instructions

- Perform the *Diagnostic System Check - Vehicle on page 6-91* prior to using this diagnostic procedure.
- Review *Strategy Based Diagnosis on page 6-83* for an overview of the diagnostic approach.
- *Diagnostic Procedure Instructions on page 6-84* provides an overview of each diagnostic category.

DTC Descriptors

DTC P1EF3: Battery Charger High Voltage Converter 1 High Temperature
DTC P1EF4: Battery Charger High Voltage Converter 2 High Temperature
DTC P1EF5: Battery Charger Input Voltage Conditioner High Temperature

Circuit/System Description

The battery charger, often referred to as the drive motor battery charger, uses a liquid cooled cooling system which is cooled from the front of the vehicle. The hybrid electronic cooling system needs to be functioning properly for the battery charger to be able to meet its temperature requirements.

The hybrid/EV powertrain control module 2 monitors the battery charger temperature and verifies it is within its proper operating range. There is a temperature sensor that measures the overall temperature of the battery charger. Also, there are battery charger internal temperatures sensors that monitor for over temperature conditions that are for the voltage converter 1, voltage converter 2, and the voltage conditioner within the battery charger.

Conditions for Running the DTC

- The vehicle 12 V battery system voltage is above 9 V.
- The vehicle is connected to an AC supply and battery charger is charging.

Conditions for Setting the DTC

The battery charger voltage converter 1, voltage converter 2, or voltage conditioner temperature sensor measures a temperature greater than 100°C (212°F).

Action Taken When the DTC Sets

- DTCs P1EF3–P1EF5 are Type A DTCs.
- Disables the vehicle high voltage battery charging.

Conditions for Clearing the DTC

- DTCs P1EF3–P1EF5 are Type A DTCs.
- The battery charger voltage converter 1, voltage converter 2, or voltage conditioner temperature sensors measure a temperature of 90°C (194°F) or less.

Reference Information

Schematic Reference

Plug-In Charging Schematics on page 9-553

Connector End View Reference

Component Connector End Views on page 11-455

Description and Operation

Plug-In Charging System Description and Operation on page 9-657

Electrical Information Reference

- *Circuit Testing on page 11-871*
- *Connector Repairs on page 11-895*
- *Testing for Intermittent Conditions and Poor Connections on page 11-877*
- *Wiring Repairs on page 11-883*

DTC Type Reference

Powertrain Diagnostic Trouble Code (DTC) Type Definitions on page 6-92

Scan Tool Reference

Control Module References on page 6-3 for scan tool information

Circuit/System Verification

1. Verify that no hybrid electronics coolant system DTC is set.

⇒ **If DTC is set**

Refer to *Diagnostic Trouble Code (DTC) List - Vehicle on page 6-92*.

⇓ **If DTC is not set**

2. Verify the hybrid/EV electronics cooling system is functioning properly. Refer to *Hybrid/EV Electronics Cooling Diagnostic on page 9-241*.

⇒ **If the hybrid/EV electronics cooling system is not functioning properly**

Repair the fault.

⇓ **If the hybrid/EV electronics cooling system is functioning properly**

3. Replace the T18 Battery Charger.

Repair Instructions

Perform the *Diagnostic Repair Verification on page 6-123* after completing the repair.

Control Module References on page 6-3 for T18 Battery Charger, often referred to as the Drive Motor Battery Charger, replacement, programming, and setup.

DTC P1EFA or P1EFB

Diagnostic Instructions

- Perform the *Diagnostic System Check - Vehicle on page 6-91* prior to using this diagnostic procedure.
- Review *Strategy Based Diagnosis on page 6-83* for an overview of the diagnostic approach.
- *Diagnostic Procedure Instructions on page 6-84* provides an overview of each diagnostic category.

DTC Descriptors

DTC P1EFA: Battery Charger High Voltage Converter 1 Input High Current

DTC P1EFB: Battery Charger High Voltage Converter 2 Input High Current

Circuit/System Description

The hybrid/EV powertrain control module 2 monitors the battery charger high voltage output and current output and ensures they are within the proper range. The battery charger operates in either a constant current mode or a constant voltage mode. Whichever mode you are in will determine which diagnostic will be run. The battery charger runs constant voltage mode at the beginning and end of the charge cycle and runs constant current mode most of the charging cycle.

Conditions for Running the DTC

P1EFA

- The vehicle 12 V battery system voltage needs to be above 9 V.
- The vehicle is connected to an 120 V AC supply and battery charging is charging the high voltage battery supply.

P1EFB

- The vehicle 12 V battery system voltage needs to be above 9 V.
- The vehicle is connected to a 240 V AC supply and battery charging is charging the high voltage battery supply.

Conditions for Setting the DTC

P1EFA, P1EFB

The battery charger detects an internal over current condition. This is an internal measurement to the battery charger.

Action Taken When the DTC Sets

- DTC P1EFA and P1EFB are type C DTCs.
- Disables the vehicle high voltage battery charging.

Conditions for Clearing the DTC

DTC P1EFA and P1EFB are type C DTCs.

Reference Information

Schematic Reference

Plug-In Charging Schematics on page 9-553

Connector End View Reference

Component Connector End Views on page 11-455

Description and Operation

Plug-In Charging System Description and Operation on page 9-657

Electrical Information Reference

- *Circuit Testing on page 11-871*
- *Connector Repairs on page 11-895*
- *Testing for Intermittent Conditions and Poor Connections on page 11-877*
- *Wiring Repairs on page 11-883*

DTC Type Reference

Powertrain Diagnostic Trouble Code (DTC) Type Definitions on page 6-92

Scan Tool Reference

Control Module References on page 6-3 for scan tool information

Special Tools

EL-48900 HEV Safety Kit

For equivalent regional tools, refer to *Special Tools on page 9-658*.

Circuit/System Testing

Danger: Always perform the High Voltage Disabling procedure prior to servicing any High Voltage component or connection. Personal Protection Equipment (PPE) and proper procedures must be followed.

The High Voltage Disabling procedure includes the following steps:

- ***Identify how to disable high voltage.***
- ***Identify how to test for the presence of high voltage.***
- ***Identify condition under which high voltage is always present and personal protection equipment (PPE) and proper procedures must be followed.***

Before working on any high voltage system, be sure to wear the following Personal Protection Equipment:

- ***Safety glasses with appropriate side shields when within 15 meters (50 feet) of the vehicle, either indoors or outdoors.***

- ***Certified and up-to-date Class "0" Insulation gloves rated at 1000V with leather protectors.***
  - ***Visually and functionally inspect the gloves before use.***
  - ***Wear the Insulation gloves with leather protectors at all times when working with the high voltage battery assembly, whether the system is energized or not.***

Failure to follow the procedures may result in serious injury or death.

1. Verify no other battery-related DTCs are set.

⇒ **If any battery-related DTCs are set**

Refer to *Diagnostic Trouble Code (DTC) List - Vehicle on page 6-92* for hybrid battery diagnostics.

⇓ **If no other battery-related DTCs are set**

2. Vehicle OFF, disable the high voltage at the A4 Hybrid/EV Battery Pack and the T18 Battery Charger. Refer to *High Voltage Disabling on page 9-363*.
3. Disconnect the X4 connector at the T18 Battery Charger and the X2 connector at the A4 Hybrid/EV Battery Pack.
4. Test for infinite resistance between the 300 V circuit terminals listed below and ground:
   - Terminal A X4
   - Terminal B X4

⇒ **If less than the specified range**

Test the 300 V circuit for a short to ground.

⇓ **If within specified range**

5. Test for less than 10 Ω between the 300 V circuit terminals listed below:
   - T18 Battery Charger terminal A X4 and A4 Hybrid/EV Battery Pack A X2
   - T18 Battery Charger terminal B X4 and A4 Hybrid/EV Battery Pack B X2

⇒ **If greater than the specified range**

Test the 300 V circuit for an open/high resistance.

⇓ **If within specified range**

6. Test for infinite resistance between the 300 V circuit terminal A X4 and B X4.

⇒ **If less than the specified range**

Test the 300 V circuits for a short between the circuits.

⇓ **If all circuits tests normal**

7. Replace the T18 Battery Charger. Refer to *Drive Motor Battery Charger Replacement on page 9-649*.

Repair Instructions

Perform the *Diagnostic Repair Verification on page 6-123* after completing the repair.

Control Module References on page 6-3 for T18 Battery Charger replacement, programming and setup.

DTC P1FFF

Diagnostic Instructions

- Perform the *Diagnostic System Check - Vehicle on page 6-91* prior to using this diagnostic procedure.
- Review *Strategy Based Diagnosis on page 6-83* for an overview of the diagnostic approach.
- *Diagnostic Procedure Instructions on page 6-84* provides an overview of each diagnostic category.

DTC Descriptors

DTC P1FFF: System Isolation/Coolant Level Sensor Fault - Hybrid/EV Battery Charging System Disabled

Circuit/System Description

TBD

Conditions for Running the DTC

The vehicle 12 V battery system voltage is greater than 9 V.

Conditions for Setting the DTC

TBD

Action Taken When the DTC Sets

DTC P1FFF is type A DTC.

Conditions for Clearing the DTC

DTC P1FFF is type A DTC.

Reference Information

Schematic Reference

Plug-In Charging Schematics on page 9-553

Connector End View Reference

Component Connector End Views on page 11-455

Description and Operation

Plug-In Charging System Description and Operation on page 9-657

Electrical Information Reference

- *Circuit Testing on page 11-871*
- *Connector Repairs on page 11-895*
- *Testing for Intermittent Conditions and Poor Connections on page 11-877*
- *Wiring Repairs on page 11-883*

DTC Type Reference

Powertrain Diagnostic Trouble Code (DTC) Type Definitions on page 6-92

Scan Tool Reference

Control Module References on page 6-3 for scan tool information

Circuit/System Verification

1. Vehicle in Service Mode.
2. Verify that no other DTCs are set.

⇒ **If any other DTCs are set**

Refer to *Diagnostic Trouble Code (DTC) List - Vehicle on page 6-92*

⇓ **If no other DTCs are set**

3. Verify that DTC P1FFF is not set.

⇒ **If DTC P1FFF is set**

3.1. With a scan tool, command the DC Charging Disabled Reset. With a scan tool, Clear all DTCs.

3.2. Vehicle OFF. Vehicle in Service Mode.

3.3. Verify that DTC P1FFF is not set.

⇒ If DTC P1FFF is set, replace the K114B Hybrid/EV Powertrain Control Module 2.

⇓ If DTC P1FFF is not set

3.4. All OK.

⇓ **If DTC P1FFF is not set**

4. All OK.

Repair Instructions

Perform the *Diagnostic Repair Verification on page 6-123* after completing the repair.

Control Module References on page 6-3 for hybrid/EV powertrain control module 2 replacement, programming, and setup.

DTC P3002, P3003, P301F, or P3020

Diagnostic Instructions

- Perform the *Diagnostic System Check - Vehicle on page 6-91* prior to using this diagnostic procedure.
- Review *Strategy Based Diagnosis on page 6-83* for an overview of the diagnostic approach.
- *Diagnostic Procedure Instructions on page 6-84* provides an overview of each diagnostic category.

DTC Descriptors

DTC P3002: Hybrid/EV Battery DC Charging Positive Voltage Sensor Circuit Low Voltage
DTC P3003: Hybrid/EV Battery DC Charging Positive Voltage Sensor Circuit High Voltage
DTC P301F: Hybrid/EV Battery DC Charging Positive Voltage Sensor Stuck Low
DTC P3020: Hybrid/EV Battery DC Charging Positive Voltage Sensor Stuck High

Circuit/System Description

The hybrid/EV battery contains 6 high voltage contactors for normal operation and regular (AC 120V) charging, and 1 module. In vehicles with DC charging capability, there are two additional DC contactors that are housed in the battery charger - DC. The high voltage contactors allow the high voltage DC batteries to be connected to the vehicle or safely contain the high voltage DC within the hybrid/EV battery assembly. The 8 high voltage contactors consist of a main positive high voltage contactor, main negative high voltage contactor, AC charge positive high voltage contactor, AC charge negative high voltage contactor, multi-function high voltage contactor, precharge contactor, DC positive contactor, and DC negative contactor. The 1 module is the hybrid/EV battery pack coolant heater module. The contactors and module close and open in a specific sequence controlled by the hybrid/EV powertrain control module 2. The hybrid/EV powertrain control module 2 supplies voltage to the control circuit for the high voltage contactors/module. Ground is provided through the case ground and chassis.

The hybrid/EV powertrain control module 2 measures internal voltages, currents, and temperatures within the battery charger - DC and charge receptacle and verifies they are within the proper range.

Conditions for Running the DTC

P3002 and P3003

The vehicle 12 V battery system voltage is greater than 9 V.

P301F

- The vehicle 12 V battery system voltage is greater than 9 V.
- The DC charge cable is connected.
- The vehicle is ready to be charged.
- The DC HPCC positive contactor is commanded OPEN.
- The charge control mode is precharge.
- The off board charger voltage limit command is greater than or equal to 201 V.
- DTC P3002 or P3003 is not set.

  OR

- The vehicle 12 V battery system voltage is greater than 9 V.
- The DC charge cable is connected.
- The vehicle is ready to be charged.
- The DC HPCC positive contactor is commanded CLOSED.
- The charge control mode is constant current.
- DTC P3002 or P3003 is not set.

P3020

- The vehicle 12 V battery system voltage is greater than 9 V.
- The DC charge cable is connected.
- The vehicle is ready to be charged.
- The DC HPCC positive contactor is commanded CLOSED.
- The charge control mode is constant current.
- DTC P3002 or P3003 is not set.

  OR

- The vehicle 12 V battery system voltage is greater than 9 V.
- Vehicle in Service Mode or Vehicle ON.
- The DC charge cable is disconnected.
- The DC HPCC positive contactor is commanded OPEN.
- DTC P3002 or P3003 is not set.

Conditions for Setting the DTC

P3002

The DC Charging Positive Voltage Sensor is less than .25 V.

P3003

The DC Charging Positive Voltage Sensor is greater than 4.5 V.

P301F

- The DC Charging Positive Voltage Sensor detects a bus voltage of less than or equal to 20 V.

  OR

- The DC Charging Negative Voltage Sensor bus voltage is greater than 20 V.

P3020

- The DC Charging Positive Voltage Sensor bus voltage is not within 20% of the hybrid powertrain control module 1 bus voltage.

  OR

- The DC Charging Positive Voltage Sensor detects a bus voltage of greater than 20 V.

Action Taken When the DTC Sets

- DTC P3002, P3003, and P3020 are type A DTCs.
- DTC P301F is type B DTC.
- Disables DC high voltage battery charging.

Conditions for Clearing the DTC

- DTC P3002, P3003, and P3020 are type A DTCs.
- DTC P301F is type B DTC.

Diagnostic Aids

A stuck negative contactor may cause a DTC P3002, P3003, P301F, or P3020 to set.

Reference Information

Schematic Reference

Plug-In Charging Schematics on page 9-553

Connector End View Reference

Component Connector End Views on page 11-455

Description and Operation

Plug-In Charging System Description and Operation on page 9-657

Electrical Information Reference

- *Circuit Testing on page 11-871*
- *Connector Repairs on page 11-895*
- *Testing for Intermittent Conditions and Poor Connections on page 11-877*
- *Wiring Repairs on page 11-883*

DTC Type Reference

Powertrain Diagnostic Trouble Code (DTC) Type Definitions on page 6-92

Scan Tool Reference

Control Module References on page 6-3 for scan tool information

Circuit/System Verification

1. Vehicle in Service Mode.
2. Verify that DTC P3018 or P301D is not set.

⇒ **If any DTC is set**

Refer to *Diagnostic Trouble Code (DTC) List - Vehicle on page 6-92*

⇓ **If none of the DTCs are set**

3. Observe the scan tool DC Positive Supply Isolation Voltage parameter. The reading should be 0 V.

⇒ **If greater than 0 V**

Note: The following setup steps MUST BE PERFORMED EXACTLY in order to exercise the contactors.

3.1. Vehicle OFF. Turn ON the park lamps.

Note:

- **DO NOT** press the power button and enter Vehicle in Service Mode or Vehicle ON.
- Ignore P0ABC after pulling the S15 Manual Service Disconnect.

3.2. Command the Hybrid/EV Battery Contactors ALL OPEN with a scan tool.

3.3. Disconnect the S15 Manual Service Disconnect.

Note:

- **DO NOT** use the Release Control button to turn OFF any of the contactors. Once the Release Control button is pushed the Circuit/System Verification will need to be restarted from the beginning.
- The following steps can be performed in any sequence or a single contactor can be exercised to verify a complaint.

3.4. Command the Hybrid/EV Battery DC Charging Positive Contactor CLOSED and ALL OPEN with a scan tool while listening for the contactor to close and open.

3.5. Verify the Hybrid/EV Battery DC Charging Positive Contactor is heard closing and opening.

⇒ If the Hybrid/EV Battery DC Charging Negative Contactor does not open and close, refer to Hybrid/EV Battery DC Charging Negative Contactor.

⇒ If the Hybrid/EV Battery DC Charging Negative Contactor does open and close, refer to Hybrid/EV Battery DC Charging Positive Voltage Sensor.

⇓ **If 0 V**

4. Verify that DTC P3002, P3003, P301F, or P3020 does not set while operating the vehicle within the Conditions for Running the DTC.

⇒ **If any of the DTCs are set**

Refer to Hybrid/EV Battery DC Charging Positive Voltage Sensor.

⇓ **If none of the DTCs are set**

5. All OK.

Circuit/System Testing

Hybrid/EV Battery DC Charging Positive Voltage Sensor

1. Vehicle OFF and all vehicle systems OFF. It may take up to 2 min for all vehicle systems to power down. Remove the High Voltage Disconnect Circuit Connector Cover. Refer to*High Voltage Disconnect Circuit Connector Cover Replacement on page 9-174*. Disconnect the X7 harness connector at the T24 Battery Charger – DC.
2. Test for less than 10 Ω between the ground circuit terminal 7 and ground.

⇒ **If 10 Ω or greater**

2.1. Vehicle OFF, disconnect the X1 harness connector at the K114B Hybrid/EV Powertrain Control Module 2.

2.2. Test for less than 2 Ω in the ground circuit end to end.

⇒ If 2 Ω or greater, repair the open/high resistance in the circuit.

⇒ If less than 2 Ω, replace the K114B Hybrid/EV Powertrain Control Module 2.

⇓ **If less than 10 Ω**

3. Vehicle in Service Mode.
4. Test for 4.8–5.2 V between the 5 V reference circuit terminal 6 and ground.

⇒ **If less than 4.8 V**

4.1. Vehicle OFF, disconnect the X1 and X2 harness connectors at the K114B Hybrid/EV Powertrain Control Module 2.

4.2. Test for infinite resistance between the 5 V reference circuit terminal 6 X7 and ground.

⇒ If less infinite resistance, repair the short to ground on the circuit.

⇓ If infinite resistance

4.3. Test for infinite resistance between the 5 V reference circuit terminal 5 X2 and ground.

⇒ If less infinite resistance, repair the short to ground on the circuit.

⇓ If infinite resistance

4.4. Test for less than 2 Ω in the 5 V reference circuit terminal 6 X7 end to end.

⇒ If 2 Ω or greater, repair the open/high resistance in the circuit

⇒ If less than 2 Ω, replace the K114B Hybrid/EV Powertrain Control Module 2.

⇒ **If 5.2 V or greater**

4.1. Vehicle OFF, disconnect the X1 and X2 harness connector at the K114B Hybrid/EV Powertrain Control Module 2. Vehicle in Service Mode.

4.2. Test for less than 1 V between the 5 V reference circuit terminal 6 X7 and ground.

⇒ If 1 V or greater, repair the short to voltage on the circuit.

⇓ If less than 1 V

4.3. Test for less than 1 V between the 5 V reference circuit terminal 5 X2 and ground.

⇒ If 1 V or greater, repair the short to voltage on the circuit.

⇒ If less than 1 V, replace the K114B Hybrid/EV Powertrain Control Module 2.

⇓ **If within the specified range**

5. Test for less than 1 V between the signal circuit terminal 11 and ground.

⇒ **If 1 V or greater**

5.1. Vehicle OFF, disconnect the X1 harness connector at the K114B Hybrid/EV Powertrain Control Module 2. Vehicle in Service Mode.

5.2. Test for less than 1 V between the signal circuit and ground.

⇒ If between 1–5 V, repair the short to voltage on the circuit.

⇒ If greater than 5 V, repair the short to voltage on the circuit and replace the T24 Battery Charger – DC.

⇓ If less than 1 V

5.3. Replace the K114B Hybrid/EV Powertrain Control Module 2.

5.4. Verify that DTC P3002, P3003, P301F, or P3020 does not set while operating the vehicle within the Conditions for Running the DTC.

⇒ If any of the DTCs are set, replace the T24 Battery Charger – DC.

⇓ If none of the DTCs are set

5.5. All OK.

⇓ **If less than 1 V**

6. Vehicle OFF, install a 3 A fused jumper wire between the signal circuit terminal 11 and the 5 V reference circuit terminal 6. Vehicle in Service Mode.

7. Verify the scan tool DC Positive Supply Isolation Voltage parameter is greater than 500 V.

⇒ **If less than 500 V**

7.1. Test for infinite resistance between the signal circuit and ground.

⇒ If less infinite resistance, repair the short to ground on the circuit.

⇓ If infinite resistance

7.2. Test for less than 2 Ω in the signal circuit end to end.

⇒ If 2 Ω or greater, repair the open/high resistance in the circuit.

⇒ If less than 2 Ω, replace the K114B Hybrid/EV Powertrain Control Module 2.

⇓ **If 500 V or greater**

8. Replace the T24 Battery Charger – DC.

Hybrid/EV Battery DC Charging Negative Contactor

1. Vehicle OFF, remove the High Voltage Disconnect Circuit Connector Cover. Refer to*High Voltage Disconnect Circuit Connector Cover Replacement on page 9-174*. Disconnect the X6 harness connector at the T24 Battery Charger - DC.
2. Test for less than 10 Ω between the ground circuit terminals listed below and ground.
   - Terminal 1
   - Terminal 3

⇒ **If 10 Ω or greater**

2.1. Vehicle OFF.

2.2. Test for less than 2 Ω in the ground circuit end to end.

⇒ If 2 Ω or greater, repair the open/high resistance in the circuit.

⇒ If less than 2 Ω, repair the open/high resistance in the ground connection.

⇓ **If less than 10 Ω**

3. Connect the X6 harness connector at the T24 Battery Charger - DC.

   Note: The following setup steps MUST BE PERFORMED EXACTLY in order to exercise the contactor.

4. Vehicle OFF, turn ON the park lamps.

   Note:

   - **DO NOT** press the power button and enter Vehicle in Service Mode or Vehicle ON.
   - Ignore P0ABC after pulling the S15 Manual Service Disconnect.

5. Command the Hybrid/EV Battery Contactors ALL OPEN with a scan tool.
6. Disconnect the S15 Manual Service Disconnect. Disconnect the X6 harness connector at the T24 Battery Charger - DC. Connect a test lamp between the control circuit terminal 4 and ground.
7. Verify that the test lamp is OFF.

⇒ **If the test lamp is ON**

7.1. Vehicle OFF, turn OFF the park lamps. Remove the test lamp. Disconnect the X1 harness connector at the K114B Hybrid Powertrain Control Module 2. Vehicle in Service Mode.

7.2. Test for less than 1 V between the control circuit and ground.

⇒ If 1 V or greater, repair the short to voltage on the circuit.

⇒ If less than 1 V, replace the K114B Hybrid Powertrain Control Module 2.

⇓ **If the test lamp is OFF**

Note: DO NOT use the Release Control button to turn OFF the contactor. Once the Release Control button is pushed the setup steps will need to be restarted from the beginning.

8. Command the Hybrid/EV Battery Negative Contactor CLOSED and ALL OPEN with a scan tool. Verify that the test lamp turns ON and OFF.

⇒ **If the test lamp does not turn ON and OFF**

8.1. Vehicle OFF, turn OFF the park lamps. Remove the test lamp. Disconnect the X1 harness connector at the K114B Hybrid Powertrain Control Module 2.

8.2. Test for infinite resistance between control circuit and ground.

⇒ If less than infinite resistance, repair the short to ground on the circuit.

⇓ If infinite resistance

8.3. Test for less than 2 Ω in the control circuit end to end.

⇒ If 2 Ω or greater, repair the open/high resistance in the circuit.

⇒ If less than 2 Ω, replace the K114B Hybrid Powertrain Control Module 2.

⇓ **If the test lamp does turn ON and OFF**

9. Replace the T24 Battery Charger - DC.

Repair Instructions

Perform the *Diagnostic Repair Verification on page 6-123* after completing the repair.

Control Module References on page 6-3 for battery charger - DC and hybrid/EV powertrain control module 2 replacement, programming, and setup.

DTC P3005, P3006, P3021, or P3022

Diagnostic Instructions

- Perform the *Diagnostic System Check - Vehicle on page 6-91* prior to using this diagnostic procedure.
- Review *Strategy Based Diagnosis on page 6-83* for an overview of the diagnostic approach.
- *Diagnostic Procedure Instructions on page 6-84* provides an overview of each diagnostic category.

DTC Descriptors

DTC P3005: Hybrid/EV Battery DC Charging Negative Voltage Sensor Circuit Low Voltage
DTC P3006: Hybrid/EV Battery DC Charging Negative Voltage Sensor Circuit High Voltage
DTC P3021: Hybrid/EV Battery DC Charging Negative Voltage Sensor Stuck Low
DTC P3022: Hybrid/EV Battery DC Charging Negative Voltage Sensor Stuck High

Circuit/System Description

The hybrid/EV battery contains 6 high voltage contactors for normal operation and regular (AC 120V) charging, and 1 module. In vehicles with DC charging capability, there are two additional DC contactors that are housed in the battery charger - DC. The high voltage contactors allow the high voltage DC batteries to be connected to the vehicle or safely contain the high voltage DC within the hybrid/EV battery assembly. The 8 high voltage contactors consist of a main positive high voltage contactor, main negative high voltage contactor, AC charge positive high voltage contactor, AC charge negative high voltage contactor, multi-function high voltage contactor, precharge contactor, DC positive contactor, and DC negative contactor. The 1 module is the hybrid/EV battery pack coolant heater module. The contactors and module close and open in a specific sequence controlled by the hybrid/EV powertrain control module 2. The hybrid/EV powertrain control module 2 supplies voltage to the control circuit for the high voltage contactors/module. Ground is provided through the case ground and chassis.

The hybrid/EV powertrain control module 2 measures internal voltages, currents, and temperatures within the battery charger - DC and charge receptacle and verifies they are within the proper range.

Conditions for Running the DTC

P3005 and P3006

The vehicle 12 V battery system voltage is greater than 9 V.

P3021

- The vehicle 12 V battery system voltage is greater than 9 V.
- The DC charge cable is connected.
- The vehicle is ready to be charged.
- The DC HPCC negative contactor is commanded OPEN.
- The charge control mode is precharge.
- The off board charger voltage limit command is greater than or equal to 201 V.
- DTCs P3005 or P3006 is not set.

  OR

- The vehicle 12 V battery system voltage is greater than 9 V.
- The DC charge cable is connected.
- The vehicle is ready to be charged.
- The charge control mode is constant current.
- The DC HPCC negative contactor is commanded CLOSED.
- DTCs P3005 or P3006 is not set.

P3022

- The vehicle 12 V battery system voltage is greater than 9 V.
- The DC charge cable is connected.
- The DC HPCC negative contactor is commanded CLOSED.
- The charge control mode is constant current.
- DTCs P3005 or P3006 is not set.

  OR

- Vehicle in Service Mode or Vehicle ON.
- The DC charge cable is disconnected.
- The DC HPCC negative contactor is commanded OPEN.

Conditions for Setting the DTC

P3005

The DC Charging Positive Voltage Sensor is less than .25 V.

P3006

The DC Charging Positive Voltage Sensor is greater than 4.5 V.

P3021

- The DC Charging Negative Voltage Sensor detects a bus voltage of less than or equal to 20 V.
- The DC Charging Positive Voltage Sensor bus voltage is greater than 20 V.

P3022

- The DC Charging Negative Voltage Sensor detects a bus voltage of greater than 20 V.
- The DC Charging Negative Voltage Sensor bus voltage is not within 20% of the hybrid powertrain control module 1 bus voltage.

Action Taken When the DTC Sets

- DTC P3005, P3006, and P3022 are type A DTCs.
- DTC P3021 is type B DTC.
- Disables DC high voltage battery charging.

Conditions for Clearing the DTC

- DTC P3005, P3006, and P3022 are type A DTCs.
- DTC P3021 is type B DTC.

Diagnostic Aids

A stuck positive contactor may cause a DTC P3005, P3006, P3021, or P3022 to set.

Reference Information

Schematic Reference

Plug-In Charging Schematics on page 9-553

Connector End View Reference

Component Connector End Views on page 11-455

Description and Operation

Plug-In Charging System Description and Operation on page 9-657

Electrical Information Reference

- *Circuit Testing on page 11-871*
- *Connector Repairs on page 11-895*
- *Testing for Intermittent Conditions and Poor Connections on page 11-877*
- *Wiring Repairs on page 11-883*

DTC Type Reference

Powertrain Diagnostic Trouble Code (DTC) Type Definitions on page 6-92

Scan Tool Reference

Control Module References on page 6-3 for scan tool information

Circuit/System Verification

1. Vehicle in Service Mode.
2. Verify that DTC P3015 or P301C is not set.

⇒ **If any DTC is set**

Refer to *Diagnostic Trouble Code (DTC) List - Vehicle on page 6-92*

⇓ **If none of the DTCs are set**

3. Observe the scan tool DC Negative Supply Isolation Voltage parameter. The reading should be 0 V.

⇒ **If greater than 0 V**

Note: The following setup steps MUST BE PERFORMED EXACTLY in order to exercise the contactors.

3.1. Vehicle OFF. Turn ON the park lamps.

Note:

- **DO NOT** press the power button and enter Vehicle in Service Mode or Vehicle ON.
- Ignore P0ABC after pulling the S15 Manual Service Disconnect.

3.2. Command the Hybrid/EV Battery Contactors ALL OPEN with a scan tool.

3.3. Disconnect the S15 Manual Service Disconnect.

Note:

- **DO NOT** use the Release Control button to turn OFF any of the contactors. Once the Release Control button is pushed the Circuit/System Verification will need to be restarted from the beginning.
- The following steps can be performed in any sequence or a single contactor can be exercised to verify a complaint.

3.4. Command the Hybrid/EV Battery DC Charging Positive Contactor CLOSED and ALL OPEN with a scan tool while listening for the contactor to close and open.

3.5. Verify the Hybrid/EV Battery DC Charging Positive Contactor is heard closing and opening.

⇒ If the Hybrid/EV Battery DC Charging Positive Contactor does not open and close, refer to Hybrid/EV Battery DC Charging Positive Contactor.

⇒ If the Hybrid/EV Battery DC Charging Positive Contactor does open and close, refer to Hybrid/EV Battery DC Charging Negative Voltage Sensor.

⇓ **If 0 V**

4. Verify that DTC P3005, P3006, P3021, or P3022 does not set while operating the vehicle within the Conditions for Running the DTC.

⇒ **If any of the DTCs are set**

Refer to Hybrid/EV Battery DC Charging Negative Voltage Sensor.

⇓ **If none of the DTCs are set**

5. All OK.

Circuit/System Testing

Hybrid/EV Battery DC Charging Negative Voltage Sensor

1. Vehicle OFF and all vehicle systems OFF. It may take up to 2 min for all vehicle systems to power down. Remove the High Voltage Disconnect Circuit Connector Cover. Refer to*High Voltage Disconnect Circuit Connector Cover Replacement on page 9-174*. Disconnect the X7 harness connector at the T24 Battery Charger – DC.
2. Test for less than 10 Ω between the ground circuit terminal 7 and ground.

⇒ **If 10 Ω or greater**

2.1. Vehicle OFF, disconnect the X1 harness connector at the K114B Hybrid/EV Powertrain Control Module 2.

2.2. Test for less than 2 Ω in the ground circuit end to end.

⇒ If 2 Ω or greater, repair the open/high resistance in the circuit.

⇒ If less than 2 Ω, replace the K114B Hybrid/EV Powertrain Control Module 2.

⇓ **If less than 10 Ω**

3. Vehicle in Service Mode.
4. Test for 4.8–5.2 V between the 5 V reference circuit terminal 6 and ground.

⇒ **If less than 4.8 V**

4.1. Vehicle OFF, disconnect the X1 and X2 harness connectors at the K114B Hybrid/EV Powertrain Control Module 2.

4.2. Test for infinite resistance between the 5 V reference circuit terminal 6 X7 and ground.

⇒ If less infinite resistance, repair the short to ground on the circuit.

⇓ If infinite resistance

4.3. Test for infinite resistance between the 5 V reference circuit terminal 5 X2 and ground.

⇒ If less infinite resistance, repair the short to ground on the circuit.

⇓ If infinite resistance

4.4. Test for less than 2 Ω in the 5 V reference circuit terminal 6 X7 end to end.

⇒ If 2 Ω or greater, repair the open/high resistance in the circuit

⇒ If less than 2 Ω, replace the K114B Hybrid/EV Powertrain Control Module 2.

⇒ **If 5.2 V or greater**

4.1. Vehicle OFF, disconnect the X1 and X2 harness connector at the K114B Hybrid/EV Powertrain Control Module 2. Vehicle in Service Mode.

4.2. Test for less than 1 V between the 5 V reference circuit terminal 6 X7 and ground.

⇒ If 1 V or greater, repair the short to voltage on the circuit.

⇓ If less than 1 V

4.3. Test for less than 1 V between the 5 V reference circuit terminal 5 X2 and ground.

⇒ If 1 V or greater, repair the short to voltage on the circuit.

⇒ If less than 1 V, replace the K114B Hybrid/EV Powertrain Control Module 2.

⇓ **If within the specified range**

5. Test for less than 1 V between the signal circuit terminal 12 and ground.

⇒ **If 1 V or greater**

5.1. Vehicle OFF, disconnect the X1 harness connector at the K114B Hybrid/EV Powertrain Control Module 2. Vehicle in Service Mode.

5.2. Test for less than 1 V between the signal circuit and ground.

⇒ If between 1–5 V, repair the short to voltage on the circuit.

⇒ If greater than 5 V, repair the short to voltage on the circuit and replace the T24 Battery Charger – DC.

⇓ If less than 1 V

5.3. Replace the K114B Hybrid/EV Powertrain Control Module 2.

5.4. Verify that DTC P3002, P3003, P301F, or P3020 does not set while operating the vehicle within the Conditions for Running the DTC.

⇒ If any of the DTCs are set, replace the T24 Battery Charger – DC.

⇓ If none of the DTCs are set

5.5. All OK.

⇓ **If less than 1 V**

6. Vehicle OFF, install a 3 A fused jumper wire between the signal circuit terminal 12 and the 5 V reference circuit terminal 6. Vehicle in Service Mode.

7. Verify the scan tool DC Negative Supply Isolation Voltage parameter is greater than 500 V.

⇒ **If less than 500 V**

7.1. Test for infinite resistance between the signal circuit and ground.

⇒ If less infinite resistance, repair the short to ground on the circuit.

⇓ If infinite resistance

7.2. Test for less than 2 Ω in the signal circuit end to end.

⇒ If 2 Ω or greater, repair the open/high resistance in the circuit.

⇒ If less than 2 Ω, replace the K114B Hybrid/EV Powertrain Control Module 2.

⇓ **If 500 V or greater**

8. Replace the T24 Battery Charger – DC.

Hybrid/EV Battery DC Charging Positive Contactor

1. Vehicle OFF, remove the High Voltage Disconnect Circuit Connector Cover. Refer to*High Voltage Disconnect Circuit Connector Cover Replacement on page 9-174*. Disconnect the X6 harness connector at the T24 Battery Charger - DC.
2. Test for less than 10 Ω between the ground circuit terminals listed below and ground.
   - Terminal 1
   - Terminal 3

⇒ **If 10 Ω or greater**

2.1. Vehicle OFF.

2.2. Test for less than 2 Ω in the ground circuit end to end.

⇒ If 2 Ω or greater, repair the open/high resistance in the circuit.

⇒ If less than 2 Ω, repair the open/high resistance in the ground connection.

⇓ **If less than 10 Ω**

3. Connect the X6 harness connector at the T24 Battery Charger - DC.

   Note: The following setup steps MUST BE PERFORMED EXACTLY in order to exercise the contactor.

4. Vehicle OFF, turn ON the park lamps.

   Note:

   - **DO NOT** press the power button and enter Vehicle in Service Mode or Vehicle ON.
   - Ignore P0ABC after pulling the S15 Manual Service Disconnect.

5. Command the Hybrid/EV Battery Contactors ALL OPEN with a scan tool.
6. Disconnect the S15 Manual Service Disconnect. Disconnect the X6 harness connector at the T24 Battery Charger - DC. Connect a test lamp between the control circuit terminal 2 and ground.

   Note: DO NOT use the Release Control button to turn OFF the contactor. Once the Release Control button is pushed the setup steps will need to be restarted from the beginning.

7. Verify that the test lamp is OFF.

⇒ **If the test lamp is ON**

7.1. Vehicle OFF, turn OFF the park lamps. Remove the test lamp. Disconnect the X1 harness connector at the K114B Hybrid Powertrain Control Module 2. Vehicle in Service Mode.

7.2. Test for less than 1 V between the control circuit and ground.

⇒ If 1 V or greater, repair the short to voltage on the circuit.

⇒ If less than 1 V, replace the K114B Hybrid/EV Powertrain Control Module 2.

⇓ **If the test lamp is OFF**

8. Command the Hybrid/EV Battery Positive Contactor CLOSED and ALL OPEN with a scan tool.
9. Verify that the test lamp turns ON and OFF.

⇒ **If the test lamp does not turn ON and OFF**

9.1. Vehicle OFF, turn OFF the park lamps. Remove the test lamp. Disconnect the X1 harness connector at the K114B Hybrid/EV Powertrain Control Module 2.

9.2. Test for infinite resistance between control circuit and ground.

⇒ If less than infinite resistance, repair the short to ground on the circuit.

⇓ If infinite resistance

9.3. Test for less than 2 Ω in the control circuit end to end.

⇒ If 2 Ω or greater, repair the open/high resistance in the circuit.

⇒ If less than 2 Ω, replace the K114B Hybrid/EV Powertrain Control Module 2.

⇓ **If the test lamp does turn ON and OFF**

10. Replace the T24 Battery Charger - DC.

Repair Instructions

Perform the *Diagnostic Repair Verification on page 6-123* after completing the repair.

Control Module References on page 6-3 for battery charger - DC and hybrid/EV powertrain control module 2 replacement, programming, and setup.

DTC P3008, P3009, or P3023

Diagnostic Instructions

- Perform the *Diagnostic System Check - Vehicle on page 6-91* prior to using this diagnostic procedure.
- Review *Strategy Based Diagnosis on page 6-83* for an overview of the diagnostic approach.
- *Diagnostic Procedure Instructions on page 6-84* provides an overview of each diagnostic category.

DTC Descriptors

DTC P3008: Hybrid/EV Battery DC Charging Current Sensor Circuit Low Voltage

DTC P3009: Hybrid/EV Battery DC Charging Current Sensor Circuit High Voltage

DTC P3023: Hybrid/EV Battery DC Charging Current Sensor Circuit Exceeded Learning Limit

Circuit/System Description

The hybrid/EV battery contains 6 high voltage contactors for normal operation and regular (AC 120V) charging, and 1 module. In vehicles with DC charging capability, there are two additional DC contactors that are housed in the battery charger - DC. The high voltage contactors allow the high voltage DC batteries to be connected to the vehicle or safely contain the high voltage DC within the hybrid/EV battery assembly. The 8 high voltage contactors consist of a main positive high voltage contactor, main negative high voltage contactor, AC charge positive high voltage contactor, AC charge negative high voltage contactor, multi-function high voltage contactor, precharge contactor, DC positive contactor, and DC negative contactor. The 1 module is the hybrid/EV battery pack coolant heater module. The contactors and module close and open in a specific sequence controlled by the hybrid/EV powertrain control module 2. The hybrid/EV powertrain control module 2 supplies voltage to the control circuit for the high voltage contactors/module. Ground is provided through the case ground and chassis.

The hybrid/EV powertrain control module 2 measures internal voltages, currents, and temperatures within the battery charger - DC and charge receptacle and verifies they are within the proper range.

Conditions for Running the DTC

P3008 and P3009

The vehicle 12 V battery system voltage is greater than 9 V.

P3023

- The vehicle 12 V battery system voltage is greater than 9 V.
- The Battery Charger DC contactors are commanded OPEN.
- The hybrid/EV battery contactors are commanded OPEN.
- DTC P3008, or P3009 is not set.

Conditions for Setting the DTC

P3008

The current sensing module is less than 8% of a calibration.

P3009

The current sensing module is greater than 95% of a calibration.

P3023

- The Battery Charger DC average current is greater than 23% with current flow commanded to 0 A.

  OR
- The Battery Charger DC average current is less than 12% with current flow commanded to 0 A.

Action Taken When the DTC Sets

- DTC P3008 and P3009 are type B DTCs.
- DTC P3023 is type C DTC.
- Disables high voltage battery charging.

Conditions for Clearing the DTC

- DTC P3008 and P3009 are type B DTCs.
- DTC P3023 is type C DTC.

Reference Information

Schematic Reference

Plug-In Charging Schematics on page 9-553

Connector End View Reference

Component Connector End Views on page 11-455

Description and Operation

Plug-In Charging System Description and Operation on page 9-657

Electrical Information Reference

- *Circuit Testing on page 11-871*
- *Connector Repairs on page 11-895*
- *Testing for Intermittent Conditions and Poor Connections on page 11-877*
- *Wiring Repairs on page 11-883*

DTC Type Reference

Powertrain Diagnostic Trouble Code (DTC) Type Definitions on page 6-92

Scan Tool Reference

Control Module References on page 6-3 for scan tool information

Circuit/System Verification

1. Vehicle in Service Mode.
2. Observe the scan tool DC Charge Port Current parameter. The reading should be 0 A.

⇒ **If greater than 0 A**

Refer to Circuit/System Testing.

⇓ **If 0 A**

3. Verify that DTC P3008, P3009, or P3023 does not set while operating the vehicle within the Conditions for Running the DTC.

⇒ **If any of the DTCs are set**

Refer to Circuit/System Testing.

⇓ **If none of the DTCs are set**

4. All OK.

Circuit/System Testing

1. Vehicle OFF and all vehicle systems OFF. It may take up to 2 min for all vehicle systems to power down. Disconnect the X7 harness connector at the T24 Battery Charger – DC.
2. Test for less than 10 Ω between the ground circuit terminal 7 and ground.

⇒ **If 10 Ω or greater**

2.1. Vehicle OFF, disconnect the X1 harness connector at the K114B Hybrid/EV Powertrain Control Module 2.

2.2. Test for less than 2 Ω in the ground circuit end to end.

⇒ If 2 Ω or greater, repair the open/high resistance in the circuit.

⇒ If less than 2 Ω, replace the K114B Hybrid/EV Powertrain Control Module 2.

⇓ **If less than 10 Ω**

3. Vehicle in Service Mode.
4. Test for 4.8–5.2 V between the 5 V reference circuit terminal 6 and ground.

⇒ **If less than 4.8 V**

4.1. Vehicle OFF, disconnect the X1 and X2 harness connectors at the K114B Hybrid/EV Powertrain Control Module 2.

4.2. Test for infinite resistance between the 5 V reference circuit terminal 6 X7 and ground.

⇒ If less infinite resistance, repair the short to ground on the circuit.

⇓ If infinite resistance

4.3. Test for infinite resistance between the 5 V reference circuit terminal 5 X2 and ground.

⇒ If less infinite resistance, repair the short to ground on the circuit.

⇓ If infinite resistance

4.4. Test for less than 2 Ω in the 5 V reference circuit terminal 6 X7 end to end.

⇒ If 2 Ω or greater, repair the open/high resistance in the circuit

⇒ If less than 2 Ω, replace the K114B Hybrid/EV Powertrain Control Module 2.

⇒ **If 5.2 V or greater**

4.1. Vehicle OFF, disconnect the X1 and X2 harness connector at the K114B Hybrid/EV Powertrain Control Module 2. Vehicle in Service Mode.

4.2. Test for less than 1 V between the 5 V reference circuit terminal 6 X7 and ground.

⇒ If 1 V or greater, repair the short to voltage on the circuit.

⇓ If less than 1 V

4.3. Test for less than 1 V between the 5 V reference circuit terminal 5 X2 and ground.

⇒ If 1 V or greater, repair the short to voltage on the circuit.

⇒ If less than 1 V, replace the K114B Hybrid/EV Powertrain Control Module 2.

⇓ **If within the specified range**

5. Test for less than 1 V between the signal circuit terminal 10 and ground.

⇒ **If 1 V or greater**

5.1. Vehicle OFF, disconnect the X1 harness connector at the K114B Hybrid/EV Powertrain Control Module 2. Vehicle in Service Mode.

5.2. Test for less than 1 V between the signal circuit and ground.

⇒ If between 1–5 V, repair the short to voltage on the circuit.

⇒ If greater than 5 V, repair the short to voltage on the circuit and replace the T24 Battery Charger – DC.

⇓ If less than 1 V

5.3. Replace the K114B Hybrid/EV Powertrain Control Module 2.

5.4. Verify that DTC P3002, P3003, P301F, or P3020 does not set while operating the vehicle within the Conditions for Running the DTC.

⇒ If any of the DTCs are set, replace the T24 Battery Charger – DC.

⇓ If none of the DTCs are set

5.5. All OK.

⇓ **If less than 1 V**

6. Vehicle OFF, install a 3 A fused jumper wire between the signal circuit terminal 10 and the 5 V reference circuit terminal 6. Vehicle in Service Mode.

7. Verify the scan tool DC Charge Port Current parameter is greater than 140 A.

⇒ **If less than 140 A**

7.1. Test for infinite resistance between the signal circuit and ground.

⇒ If less infinite resistance, repair the short to ground on the circuit.

⇓ If infinite resistance

7.2. Test for less than 2 Ω in the signal circuit end to end.

⇒ If 2 Ω or greater, repair the open/high resistance in the circuit.

⇒ If less than 2 Ω, replace the K114B Hybrid/EV Powertrain Control Module 2.

⇓ **If 140 A or greater**

8. Replace the T24 Battery Charger – DC.

Repair Instructions

Perform the *Diagnostic Repair Verification on page 6-123* after completing the repair.

Control Module References on page 6-3 for battery charger - DC and hybrid/EV powertrain control module 2 replacement, programming, and setup.

DTC P300B

Diagnostic Instructions

- Perform the *Diagnostic System Check - Vehicle on page 6-91* prior to using this diagnostic procedure.
- Review *Strategy Based Diagnosis on page 6-83* for an overview of the diagnostic approach.
- *Diagnostic Procedure Instructions on page 6-84* provides an overview of each diagnostic category.

DTC Descriptors

DTC P300B: Hybrid/EV Battery DC Charging Output Current Performance

Circuit/System Description

The hybrid/EV battery contains 6 high voltage contactors for normal operation and regular (AC 120V) charging, and 1 module. In vehicles with DC charging capability, there are two additional DC contactors that are housed in the battery charger - DC. The high voltage contactors allow the high voltage DC batteries to be connected to the vehicle or safely contain the high voltage DC within the hybrid/EV battery assembly. The 8 high voltage contactors consist of a main positive high voltage contactor, main negative high voltage contactor, AC charge positive high voltage contactor, AC charge negative high voltage contactor, multi-function high voltage contactor, precharge contactor, DC positive contactor, and DC negative contactor. The 1 module is the hybrid/EV battery pack coolant heater module. The contactors and module close and open in a specific sequence controlled by the hybrid/EV powertrain control module 2. The hybrid/EV powertrain control module 2 supplies voltage to the control circuit for the high voltage contactors/module. Ground is provided through the case ground and chassis.

The hybrid/EV powertrain control module 2 measures internal voltages, currents, and temperatures within the battery charger - DC and charge receptacle and verifies they are within the proper range.

Conditions for Running the DTC

- The vehicle 12 V battery system voltage is greater than 9 V.
- The Charge Control Mode is Constant current or Constant Voltage.
- The Battery Charger DC positive and negative contactors are closed.
- The Battery Pack main positive, main negative, and multifunction contactors are closed.
- The Charge Power Level is DC.
- DTCs P3008, P3009, P3023 are not set.

Conditions for Setting the DTC

- The Battery Charger DC current is greater than 9 A when the commanded current is 0 A.

  OR
- The Battery Charger DC current deviation is greater than 5% of the commanded current.

Action Taken When the DTC Sets

DTC P300B is a type B DTC.

Conditions for Clearing the DTC

DTC P300B is a type B DTC.

Diagnostic Aids

The maximum allowable error between the actual average DC current and the vehicle commanded current is;

- +/- 150 mA when the commanded current is 5 A or less.
- +/- 1.5 A when the commanded current is greater than 5 A but 50 A or less.
- +/– 3 % of the DC charger maximum current output when the commanded current is greater than 50 A.

Reference Information

Schematic Reference

Plug-In Charging Schematics on page 9-553

Connector End View Reference

Component Connector End Views on page 11-455

Description and Operation

Plug-In Charging System Description and Operation on page 9-657

Electrical Information Reference

- *Circuit Testing on page 11-871*
- *Connector Repairs on page 11-895*
- *Testing for Intermittent Conditions and Poor Connections on page 11-877*
- *Wiring Repairs on page 11-883*

DTC Type Reference

Powertrain Diagnostic Trouble Code (DTC) Type Definitions on page 6-92

Scan Tool Reference

Control Module References on page 6-3 for scan tool information

Circuit/System Verification

1. Vehicle in Service Mode.
2. Verify that DTC P3002, P3003, P3005, P3006, P3008, P3009, P3015, P3018, P301C, P301D, P301F, P3020, P3021, P3022, or P3023 is not set.

⇒ **If any DTC is set**

Refer to *Diagnostic Trouble Code (DTC) List - Vehicle on page 6-92*

⇓ **If none of the DTCs are set**

Note: The following setup steps MUST BE PERFORMED EXACTLY in order to exercise the contactors.

3. Vehicle OFF. Turn ON the park lamps.

Note:

- **DO NOT** press the power button and enter Vehicle in Service Mode or Vehicle ON.
- Ignore P0ABC after pulling the S15 Manual Service Disconnect.

4. Command the Hybrid/EV Battery Contactors ALL OPEN with a scan tool.
5. Disconnect the S15 Manual Service Disconnect.

Note:

- **DO NOT** use the Release Control button to turn OFF any of the contactors. Once the Release Control button is pushed the Circuit/System Verification will need to be restarted from the beginning.
- The following steps can be performed in any sequence or a single contactor can be exercised to verify a complaint.

6. Command the Hybrid/EV Battery DC Charging Negative Contactor CLOSED and ALL OPEN with a scan tool while listening for the contactor to close and open.
7. Verify the Hybrid/EV Battery DC Charging Negative Contactor is heard closing and opening.

⇒ **If the Hybrid/EV Battery DC Charging Negative Contactor does not open and close**

Refer to Hybrid/EV Battery DC Charging Negative Contactor.

⇓ **If the Hybrid/EV Battery DC Charging Negative Contactor does open and close**

8. Command the Hybrid/EV Battery DC Charging Positive Contactor CLOSED and ALL OPEN with a scan tool while listening for the contactor to close and open.
9. Verify the Hybrid/EV Battery DC Charging Positive Contactor is heard closing and opening.

⇒ **If the Hybrid/EV Battery DC Charging Positive Contactor does not open and close**

Refer to Hybrid/EV Battery DC Charging Positive Contactor.

⇓ **If the Hybrid/EV Battery DC Charging Positive Contactor does open and close**

10. Verify that DTC P300B does not set while operating the vehicle within the Conditions for Running the DTC.

⇒ **If DTC P300B is set**

Contact the GM Technical Assistance Center to report a DC Charge Station problem.

⇓ **If DTC P300B is not set**

11. All OK.

Circuit/System Testing

Hybrid/EV Battery DC Charging Negative Contactor

1. Vehicle OFF, remove the High Voltage Disconnect Circuit Connector Cover. Refer to*High Voltage Disconnect Circuit Connector Cover Replacement on page 9-174*. Disconnect the X6 harness connector at the T24 Battery Charger - DC.
2. Test for less than 10 Ω between the ground circuit terminals listed below and ground.
   - Terminal 1
   - Terminal 3

⇒ **If 10 Ω or greater**

2.1. Vehicle OFF.

2.2. Test for less than 2 Ω in the ground circuit end to end.

⇒ If 2 Ω or greater, repair the open/high resistance in the circuit.

⇒ If less than 2 Ω, repair the open/high resistance in the ground connection.

⇓ **If less than 10 Ω**

3. Connect the X6 harness connector at the T24 Battery Charger - DC.

Note: The following setup steps MUST BE PERFORMED EXACTLY in order to exercise the contactor.

4. Vehicle OFF, turn ON the park lamps.

Note:

- **DO NOT** press the power button and enter Vehicle in Service Mode or Vehicle ON.
- Ignore P0ABC after pulling the S15 Manual Service Disconnect.

5. Command the Hybrid/EV Battery Contactors ALL OPEN with a scan tool.
6. Disconnect the S15 Manual Service Disconnect. Disconnect the X6 harness connector at the T24 Battery Charger - DC. Connect a test lamp between the control circuit terminal 4 and ground.
7. Verify that the test lamp is OFF.

⇒ **If the test lamp is ON**

7.1. Vehicle OFF, turn OFF the park lamps. Remove the test lamp. Disconnect the X1 harness connector at the K114B Hybrid Powertrain Control Module 2. Vehicle in Service Mode.

7.2. Test for less than 1 V between the control circuit and ground.

⇒ If 1 V or greater, repair the short to voltage on the circuit.

⇒ If less than 1 V, replace the K114B Hybrid Powertrain Control Module 2.

⇓ **If the test lamp is OFF**

Note: DO NOT use the Release Control button to turn OFF the contactor. Once the Release Control button is pushed the setup steps will need to be restarted from the beginning.

8. Command the Hybrid/EV Battery Negative Contactor CLOSED and ALL OPEN with a scan tool. Verify that the test lamp turns ON and OFF.

⇒ **If the test lamp does not turn ON and OFF**

8.1. Vehicle OFF, turn OFF the park lamps. Remove the test lamp. Disconnect the X1 harness connector at the K114B Hybrid Powertrain Control Module 2.

8.2. Test for infinite resistance between control circuit and ground.

⇒ If less than infinite resistance, repair the short to ground on the circuit.

⇓ If infinite resistance

8.3. Test for less than 2 Ω in the control circuit end to end.

⇒ If 2 Ω or greater, repair the open/high resistance in the circuit.

⇒ If less than 2 Ω, replace the K114B Hybrid Powertrain Control Module 2.

⇓ **If the test lamp does turn ON and OFF**

9. Replace the T24 Battery Charger - DC.

Hybrid/EV Battery DC Charging Positive Contactor

1. Vehicle OFF, remove the High Voltage Disconnect Circuit Connector Cover. Refer to*High Voltage Disconnect Circuit Connector Cover Replacement on page 9-174*. Disconnect the X6 harness connector at the T24 Battery Charger - DC.
2. Test for less than 10 Ω between the ground circuit terminals listed below and ground.
   - Terminal 1
   - Terminal 3

⇒ **If 10 Ω or greater**

2.1. Vehicle OFF.

2.2. Test for less than 2 Ω in the ground circuit end to end.

⇒ If 2 Ω or greater, repair the open/high resistance in the circuit.

⇒ If less than 2 Ω, repair the open/high resistance in the ground connection.

⇓ **If less than 10 Ω**

3. Connect the X6 harness connector at the T24 Battery Charger - DC.

   Note: The following setup steps MUST BE PERFORMED EXACTLY in order to exercise the contactor.

4. Vehicle OFF, turn ON the park lamps.

Note:

- **DO NOT** press the power button and enter Vehicle in Service Mode or Vehicle ON.
- Ignore P0ABC after pulling the S15 Manual Service Disconnect.

5. Command the Hybrid/EV Battery Contactors ALL OPEN with a scan tool.
6. Disconnect the S15 Manual Service Disconnect. Disconnect the X6 harness connector at the T24 Battery Charger - DC. Connect a test lamp between the control circuit terminal 2 and ground.

   Note: DO NOT use the Release Control button to turn OFF the contactor. Once the Release Control button is pushed the setup steps will need to be restarted from the beginning.

7. Verify that the test lamp is OFF.

⇒ **If the test lamp is ON**

7.1. Vehicle OFF, turn OFF the park lamps. Remove the test lamp. Disconnect the X1 harness connector at the K114B Hybrid Powertrain Control Module 2. Vehicle in Service Mode.

7.2. Test for less than 1 V between the control circuit and ground.

⇒ If 1 V or greater, repair the short to voltage on the circuit.

⇒ If less than 1 V, replace the K114B Hybrid/EV Powertrain Control Module 2.

⇓ **If the test lamp is OFF**

8. Command the Hybrid/EV Battery Positive Contactor CLOSED and ALL OPEN with a scan tool.
9. Verify that the test lamp turns ON and OFF.

⇒ **If the test lamp does not turn ON and OFF**

9.1. Vehicle OFF, turn OFF the park lamps. Remove the test lamp. Disconnect the X1 harness connector at the K114B Hybrid/EV Powertrain Control Module 2.

9.2. Test for infinite resistance between control circuit and ground.

⇒ If less than infinite resistance, repair the short to ground on the circuit.

⇓ If infinite resistance

9.3. Test for less than 2 Ω in the control circuit end to end.

⇒ If 2 Ω or greater, repair the open/high resistance in the circuit.

⇒ If less than 2 Ω, replace the K114B Hybrid/EV Powertrain Control Module 2.

⇓ **If the test lamp does turn ON and OFF**

10. Replace the T24 Battery Charger - DC.

Repair Instructions

Perform the *Diagnostic Repair Verification on page 6-123* after completing the repair.

Control Module References on page 6-3 for battery charger - DC replacement, programming, and setup.

DTC P300C, P300D, or P300F

Diagnostic Instructions

- Perform the *Diagnostic System Check - Vehicle on page 6-91* prior to using this diagnostic procedure.
- Review *Strategy Based Diagnosis on page 6-83* for an overview of the diagnostic approach.
- *Diagnostic Procedure Instructions on page 6-84* provides an overview of each diagnostic category.

DTC Descriptors

DTC P300C: Hybrid/EV Battery DC Charging Port Temperature Sensor Circuit Low
DTC P300D: Hybrid/EV Battery DC Charging Port Temperature Sensor Circuit High
DTC P300F: Hybrid/EV Battery DC Charging Port Temperature Sensor Circuit Erratic

Circuit/System Description

The hybrid/EV powertrain control module 2 monitors the receptacle temperature any time the hybrid/EV powertrain control module 2 is awake. The hybrid/EV powertrain control module 2 verifies the temperature signal is within the proper range.

Conditions for Running the DTC

P300C and P300D

The vehicle 12 V battery system voltage is greater than 9 V.

P300F

- The vehicle 12 V battery system voltage is greater than 9 V.
- DTC P300C, or P300D is not set.

Conditions for Setting the DTC

P300C

The temperature sensor voltage is less than .125 V.

P300D

The temperature sensor voltage is greater than 4.95 V.

P300F

The Charging port temperature minus the Charging port temperature filtered is greater than 5° C (9° F).

Action Taken When the DTC Sets

- DTC P300C, P300D, and P300F are type A DTCs.
- Disables DC high voltage battery charging.

Conditions for Clearing the DTC

- DTC P300C, P300D, and P300F are type A DTCs.

Reference Information

Schematic Reference

Plug-In Charging Schematics on page 9-553

Connector End View Reference

Component Connector End Views on page 11-455

Description and Operation

Plug-In Charging System Description and Operation on page 9-657

Electrical Information Reference

- *Circuit Testing on page 11-871*
- *Connector Repairs on page 11-895*
- *Testing for Intermittent Conditions and Poor Connections on page 11-877*
- *Wiring Repairs on page 11-883*

DTC Type Reference

Powertrain Diagnostic Trouble Code (DTC) Type Definitions on page 6-92

Scan Tool Reference

Control Module References on page 6-3 for scan tool information

Circuit/System Verification

1. Vehicle in Service Mode.

   Note: The DC Charge Port Temperature should be close to ambient temperature without the cord set plugged in.

2. Observe the scan tool DC Charge Port Temperature parameter. The reading should be between -40 and +150° C (-40 and +302° F).

⇒ **The reading is not within the specified range**

Refer to Circuit/System Testing.

⇓ **The reading is within the specified range**

3. Verify that DTC P300C, P300D, or P300F does not set while operating the vehicle within the Conditions for Running the DTC.

⇒ **If any of the DTCs are set**

Refer to Circuit/System Testing.

⇓ **If none of the DTCs are set**

4. All OK.

Circuit/System Testing

1. Vehicle OFF and all vehicle systems OFF. Disconnect the X2 harness connector at the X98 Hybrid/EV Battery Charger Receptacle. It may take up to 2 min for all vehicle systems to power down.
2. Test for less than 10 Ω between the low reference terminal 6 and ground.

⇒ **If 10 Ω or greater**

2.1. Vehicle OFF, disconnect the X2 harness connector at the K114B Hybrid/EV Powertrain Control Module 2.

2.2. Test for less than 2 Ω in the low reference circuit end to end.

⇒ If 2 Ω or greater, repair the open/high resistance in the circuit

⇒ If less than 2 Ω, replace the K114B Hybrid/EV Powertrain Control Module 2.

⇓ **If less than 10 Ω**

3. Vehicle in Service Mode.
4. Test for 4.8–4.95 V between the signal circuit terminal 5 and ground.

⇒ **If less than 4.8 V**

4.1. Vehicle OFF, disconnect the X2 harness connector at the K114B Hybrid/EV Powertrain Control Module 2.

4.2. Test for infinite resistance between the signal circuit and ground

⇒ If less infinite resistance, repair the short to ground on the circuit.

⇓ If infinite resistance

4.3. Test for less than 2 Ω in the signal circuit end to end.

⇒ If 2 Ω or greater, repair the open/high resistance in the circuit

⇒ If less than 2 Ω, replace the K114B Hybrid/EV Powertrain Control Module 2.

⇒ **If greater than 4.95 V**

4.1. Vehicle OFF, disconnect the X2 harness connector at the K114B Hybrid/EV Powertrain Control Module 2. Vehicle in Service Mode.

4.2. Test for less than 1 V between the signal circuit and ground.

⇒ If between 1–5.2 V, repair the short to voltage on the circuit.

⇒ If greater than 5.2 V, repair the short to voltage on the circuit and replace the X98 Hybrid/EV Battery Charger Receptacle.

⇒ If less than 1 V, replace the K114B Hybrid/EV Powertrain Control Module 2.

⇓ **If between 4.8–4.95 V**

5. Replace the X98 Hybrid/EV Battery Charger Receptacle.

Component Testing

1. Vehicle OFF and all vehicle systems OFF. Disconnect the X2 harness connector at the X98 Hybrid/EV Battery Charger Receptacle.
2. Test for 3.20–4.20k Ω at approximately 21.11°C (70°F) between the signal terminal 5 and the low reference terminal 6.

⇒ **If not within the specified range**

Replace the X98 Hybrid/EV Battery Charger Receptacle.

⇓ **If within the specified range**

3. All OK.

Repair Instructions

Perform the *Diagnostic Repair Verification on page 6-123* after completing the repair.

- *Drive Motor Battery Charger Receptacle Replacement (Without quick charge) on page 9-652* or *Drive Motor Battery Charger Receptacle Replacement (With quick charge) on page 9-654*
- *Control Module References on page 6-3* for hybrid/EV powertrain control module 2 replacement, programming, and setup.

DTC P3010, P3013, or P3014

Diagnostic Instructions

- Perform the *Diagnostic System Check - Vehicle on page 6-91* prior to using this diagnostic procedure.
- Review *Strategy Based Diagnosis on page 6-83* for an overview of the diagnostic approach.
- *Diagnostic Procedure Instructions on page 6-84* provides an overview of each diagnostic category.

DTC Descriptors

DTC P3010: Hybrid/EV Battery DC Charging Port Lock Control Circuit

DTC P3013: Hybrid/EV Battery DC Charging Port Lock Stuck Open

DTC P3014: Hybrid/EV Battery DC Charging Port Lock Stuck Closed

Circuit/System Description

The hybrid/EV powertrain control module 2 activates the charge port lock to prevent the DC charge cord from being disconnected during charging. The hybrid/EV powertrain control module 2 monitors the charge port lock any time the hybrid/EV powertrain control module 2 is awake. The hybrid/EV powertrain control module 2 monitors the command and the actuator position to verify proper operation.

Conditions for Running the DTC

P3010

The vehicle 12 V battery system voltage is greater than 9 V.

P3013 and P3014

- The vehicle 12 V battery system voltage is greater than 9 V.
- The charge port lock actuator has not been commanded for more than 2 sec.
- DTC P302B, P302C, or P302D is not set.

Conditions for Setting the DTC

P3010

- The hybrid/EV powertrain control module 2 has detected a lock driver open circuit fault.
- The charge port lock actuator has been commanded to LOCK or UNLOCK.

  OR
- The hybrid/EV powertrain control module 2 has detected a lock driver short circuit fault.
- The charge port lock actuator has been commanded to UNLOCK.

P3013

- The charge port lock actuator has been commanded to LOCK.
- The hybrid/EV powertrain control module 2 has determined a stuck open condition by comparing the charge port lock commanded lock position to the DC charge port lock actuator engaged position.

P3014

- The charge port lock actuator has been commanded to UNLOCK.
- The hybrid/EV powertrain control module 2 has determined a stuck closed condition by comparing the charge port lock commanded unlock position to the DC charge port lock actuator disengaged position.

Action Taken When the DTC Sets

DTC P3010, P3013, and P3014 are type C DTCs.

Conditions for Clearing the DTC

DTC P3010, P3013, and P3014 are type C DTCs.

Reference Information

Schematic Reference

Plug-In Charging Schematics on page 9-553

Connector End View Reference

Component Connector End Views on page 11-455

Description and Operation

Plug-In Charging System Description and Operation on page 9-657

Electrical Information Reference

- *Circuit Testing on page 11-871*
- *Connector Repairs on page 11-895*
- *Testing for Intermittent Conditions and Poor Connections on page 11-877*
- *Wiring Repairs on page 11-883*

DTC Type Reference

Powertrain Diagnostic Trouble Code (DTC) Type Definitions on page 6-92

Scan Tool Reference

Control Module References on page 6-3 for scan tool information

Circuit/System Verification

1. Vehicle in Service Mode.
2. Command the DC Charge Port Lock to LOCK and UNLOCK with a scan tool while listening for the DC Charge Port Lock to lock and unlock. The DC Charge Port Lock should lock and unlock and the scan tool DC Charge Port Lock Actuator Engaged Position parameter should change between 0.15–4.85 V.

⇒ **If the DC Charge Port Lock does not LOCK or UNLOCK or the DC Charge Port Lock Actuator Engaged Position parameter does not change**

Refer to Circuit/System Testing.

⇓ **If the DC Charge Port Lock does LOCK and UNLOCK and the DC Charge Port Lock Actuator Engaged Position parameter changes**

3. All OK.

Circuit/System Testing

1. Vehicle OFF and all vehicle systems OFF. Disconnect the X2 harness connector at the X98 Hybrid/EV Battery Charger Receptacle. Connect a test lamp between the control circuit terminal 7 and ground. Vehicle in Service Mode.
2. Verify the test lamp illuminates.

⇒ **If the test lamp does not illuminate or is very Dim**

2.1. Vehicle OFF, disconnect the X2 harness connector at the K114B Hybrid/EV Powertrain Control Module 2.

2.2. Test for infinite resistance between the control circuit terminal 7 and ground.

⇒ If less infinite resistance, repair the short to ground on the circuit.

⇓ If infinite resistance

2.3. Test for less than 2 Ω in the control circuit terminal 7 end to end.

⇒ If 2 Ω or greater, repair the open/high resistance in the circuit.

⇒ If less than 2 Ω, replace the K114B Hybrid/EV Powertrain Control Module 2.

⇓ **If the test lamp does illuminate**

3. Command the DC Charge Port Lock to LOCK and UNLOCK with a scan tool. Verify that the test lamp turns ON and OFF.

⇒ **If the test lamp does not turn OFF or Dims**

3.1. Vehicle OFF, disconnect the X2 harness connector at the K114B Hybrid/EV Powertrain Control Module 2. Vehicle in Service Mode.

3.2. Test for less than 1 V between the control circuit terminal 7 and ground.

⇒ If 1 V or greater, repair the short to voltage in the circuit.

⇒ If less than 1 V, replace the K114B Hybrid/EV Powertrain Control Module 2.

⇓ **If the test lamp turns ON and OFF**

4. Disconnect the test lamp. Connect a test lamp between the control circuit terminal 8 and ground.

⇒ **If the test lamp does not illuminate or is very Dim**

4.1. Vehicle OFF, disconnect the X2 harness connector at the K114B Hybrid/EV Powertrain Control Module 2.

4.2. Test for infinite resistance between the control circuit terminal 8 and ground.

⇒ If less infinite resistance, repair the short to ground on the circuit.

⇓ If infinite resistance

4.3. Test for less than 2 Ω in the control circuit end to end.

⇒ If 2 Ω or greater, repair the open/high resistance in the circuit.

⇒ If less than 2 Ω, replace the K114B Hybrid/EV Powertrain Control Module 2.

⇓ **If the test lamp does illuminate**

5. Command the DC Charge Port Lock to UNLOCK and LOCK with a scan tool. Verify that the test lamp turns ON and OFF.

⇒ **If the test lamp does not turn OFF or Dims**

5.1. Vehicle OFF, disconnect the X2 harness connector at the K114B Hybrid/EV Powertrain Control Module 2. Vehicle in Service Mode.

5.2. Test for less than 1 V between the control circuit terminal 8 and ground.

⇒ If 1 V or greater, repair the short to voltage in the circuit.

⇒ If less than 1 V, replace the K114B Hybrid/EV Powertrain Control Module 2.

⇓ **If the test lamp turns ON and OFF**

6. Replace the X98 Hybrid/EV Battery Charger Receptacle.

Repair Instructions

Perform the *Diagnostic Repair Verification on page 6-123* after completing the repair.

- *Drive Motor Battery Charger Receptacle Replacement (Without quick charge) on page 9-652* or *Drive Motor Battery Charger Receptacle Replacement (With quick charge) on page 9-654*
- *Control Module References on page 6-3* for hybrid/EV powertrain control module 2 replacement, programming, and setup.

DTC P3015, P3018, P301C, or P301D

Diagnostic Instructions

- Perform the *Diagnostic System Check - Vehicle on page 6-91* prior to using this diagnostic procedure.
- Review *Strategy Based Diagnosis on page 6-83* for an overview of the diagnostic approach.
- *Diagnostic Procedure Instructions on page 6-84* provides an overview of each diagnostic category.

DTC Descriptors

DTC P3015: Hybrid/EV Battery DC Charging Positive Contactor Control Circuit
DTC P3018: Hybrid/EV Battery DC Charging Negative Contactor Control Circuit
DTC P301C: Hybrid/EV Battery DC Charging Positive Contactor Stuck Closed
DTC P301D: Hybrid/EV Battery DC Charging Negative Contactor Stuck Closed

Diagnostic Fault Information

Circuit	Short to Ground	Open/High Resistance	Short to Voltage	Signal Performance
Relay Coil Control	P3015, P3018, P301C, P301D	P3015, P3018, P301C, P301D	P3015, P3018, P301C, P301D	—

Circuit/System Description

In vehicles with quick charge DC charging capability, RPO: CBT, there are two high voltage contactors that are housed in the T24 battery charger - DC. These additional high voltage contactors allow the high voltage DC batteries to be connected to the X98 Hybrid/EV Battery Charger Receptacle DC charge terminals.

The hybrid/EV powertrain control module 2 measures internal voltages, currents, and temperatures within the T24 battery charger - DC and charge receptacle and verifies they are within the proper range.

Conditions for Running the DTC

P3015 and P3018

- The vehicle 12 V battery system voltage is greater than 10.2 V.

P301C and P301D

- The vehicle 12 V battery system voltage is greater than 10.2 V.
- The main positive and negative contactors are CLOSED.
- The DC charging positive and negative contactors are OPEN.

Conditions for Setting the DTC

P3015

- The DC charging positive contactor is commanded OPEN and the output voltage is greater then 4 V.

  OR
- The DC charging positive contactor is commanded OPEN and the output voltage is greater than battery voltage minus 0.4 V.

  OR
- The DC charging positive contactor is commanded CLOSED and the current sense feedback is less than 194 mA.

P3018

- The DC charging negative contactor is commanded OPEN and the output voltage is greater then 4 V.

  OR
- The DC charging negative contactor is commanded OPEN and the output voltage is greater than battery voltage minus 0.4 V.

  OR
- The DC charging negative contactor is commanded CLOSED and the current sense feedback is less than 194 mA.

P301C

The DC charging positive bus voltage is greater than 20 V.

P301D

The DC charging negative bus voltage is greater than 20 V.

Action Taken When the DTC Sets

- DTC P3015, and P3018 are type B DTCs.
- DTC P301C, and P301D are type A DTCs.

Conditions for Clearing the DTC

- DTC P3015, and P3018 are type B DTCs.
- DTC P301C, and P301D are type A DTCs.

Reference Information

Schematic Reference

Plug-In Charging Schematics on page 9-553

Connector End View Reference

Component Connector End Views on page 11-455

Description and Operation

Plug-In Charging System Description and Operation on page 9-657

Electrical Information Reference

- *Circuit Testing on page 11-871*
- *Connector Repairs on page 11-895*
- *Testing for Intermittent Conditions and Poor Connections on page 11-877*
- *Wiring Repairs on page 11-883*

DTC Type Reference

Powertrain Diagnostic Trouble Code (DTC) Type Definitions on page 6-92

Scan Tool Reference

Control Module References on page 6-3 for scan tool information

Circuit/System Verification

Note: The following setup steps MUST BE PERFORMED EXACTLY in order to exercise the contactors.

1. Vehicle OFF. Turn ON the park lamps.

   Note: DO NOT press the power button and enter Vehicle in Service Mode or Vehicle ON.

   Note: There are two contactor control functions available on the scan tool. Make sure you select the DC charging contactor control and not the battery contactor control.

2. Command the hybrid powertrain control module 2, Hybrid/EV Battery DC Charging Contactors ALL OPEN with a scan tool.

   Note: Ignore P0ABC after pulling the S15 Manual Service Disconnect.

3. Disconnect the S15 Manual Service Disconnect.

   Note: DO NOT use the scan tool Release Control button to turn OFF any of the contactors. Once the scan tool Release Control button is pushed the Circuit/System Verification will need to be restarted from the beginning, including reinstalling the S15 Manual Service Disconnect and clearing DTCs.

4. Command the Hybrid/EV Battery DC Charging Negative Contactor CLOSED and ALL OPEN with a scan tool while listening for the contactor to open.

   Note: It is normal for the charging contactors to only make noise while opening.

5. Verify the Hybrid/EV Battery DC Charging Negative Contactor is heard opening.

⇒ **If the Hybrid/EV Battery DC Charging Negative Contactor operation cannot be heard**

Refer to Hybrid/EV Battery DC Charging Negative Contactor.

⇓ **If the Hybrid/EV Battery DC Charging Negative Contactor operation can be heard**

6. Command the Hybrid/EV Battery DC Charging Positive Contactor CLOSED and ALL OPEN with a scan tool while listening for the contactor to open.
7. Verify the Hybrid/EV Battery DC Charging Positive Contactor is heard opening.

⇒ **If the Hybrid/EV Battery DC Charging Positive Contactor operation cannot be heard**

Refer to Hybrid/EV Battery DC Charging Positive Contactor.

⇓ **If the Hybrid/EV Battery DC Charging Positive Contactor operation can be heard**

Note: It is normal for the Hybrid/EV Battery DC Charging Negative Contactor to be slightly quieter than the positive contactor.

8. Repeat opening and closing of both DC Charging contactors several times while comparing the sound made by each contactor.

⇒ **If either contactor intermittently stops working**

Replace the T24 Battery Charger – DC

⇓ **If both contactors consistently generate sound**

9. All OK.

Circuit/System Testing

Hybrid/EV Battery DC Charging Negative Contactor

1. Vehicle OFF, remove the High Voltage Disconnect Circuit Connector Cover. Refer to *High Voltage Disconnect Circuit Connector Cover Replacement on page 9-174*. Disconnect the X6 harness connector at the T24 Battery Charger - DC.
2. Test for less than 10 Ω between the ground circuit terminals listed below and ground.
   - Terminal 1
   - Terminal 3

⇒ **If 10 Ω or greater**

2.1. Vehicle OFF.

2.2. Test for less than 2 Ω in the ground circuit end to end.

⇒ If 2 Ω or greater, repair the open/high resistance in the circuit.

⇒ If less than 2 Ω, repair the open/high resistance in the ground connection.

⇓ **If less than 10 Ω**

3. Connect the X6 harness connector at the T24 Battery Charger - DC.

   Note: The following setup steps MUST BE PERFORMED EXACTLY in order to exercise the contactor.

4. Vehicle OFF, turn ON the park lamps.

   Note: DO NOT press the power button and enter Vehicle in Service Mode or Vehicle ON.

5. Command the Hybrid/EV Battery DC Charging Contactors ALL OPEN with a scan tool.

   Note: Ignore P0ABC after pulling the S15 Manual Service Disconnect.

6. Disconnect the S15 Manual Service Disconnect. Disconnect the X6 harness connector at the T24 Battery Charger - DC. Connect a test lamp between the control circuit terminal 2 and ground.
7. Verify that the test lamp is OFF.

⇒ **If the test lamp is ON**

7.1. Vehicle OFF, turn OFF the park lamps. Remove the test lamp. Disconnect the X1 harness connector at the K114B Hybrid Powertrain Control Module 2. Vehicle in Service Mode.

7.2. Test for less than 1 V between the control circuit and ground.

⇒ If 1 V or greater, repair the short to voltage on the circuit.

⇒ If less than 1 V, replace the K114B Hybrid Powertrain Control Module 2.

⇓ **If the test lamp is OFF**

Note: DO NOT use the scan tool Release Control button to turn OFF the contactor. Once the scan tool Release Control button is pushed the setup steps will need to be restarted from the beginning.

8. Command the Hybrid/EV Battery DC Charging Negative Contactor CLOSED and ALL OPEN with a scan tool. Verify that the test lamp turns ON and OFF.

⇒ **If the test lamp does not turn ON and OFF**

8.1. Vehicle OFF, turn OFF the park lamps. Remove the test lamp. Disconnect the X1 harness connector at the K114B Hybrid Powertrain Control Module 2.

8.2. Test for infinite resistance between control circuit and ground.

⇒ If less than infinite resistance, repair the short to ground on the circuit.

⇓ If infinite resistance

8.3. Test for less than 2 Ω in the control circuit end to end.

⇒ If 2 Ω or greater, repair the open/high resistance in the circuit.

⇒ If less than 2 Ω, replace the K114B Hybrid Powertrain Control Module 2.

⇓ **If the test lamp does turn ON and OFF**

9. Replace the T24 Battery Charger - DC.

Hybrid/EV Battery DC Charging Positive Contactor

1. Vehicle OFF, remove the High Voltage Disconnect Circuit Connector Cover. Refer to*High Voltage Disconnect Circuit Connector Cover Replacement on page 9-174*. Disconnect the X6 harness connector at the T24 Battery Charger - DC.
2. Test for less than 10 Ω between the ground circuit terminals listed below and ground.
   - Terminal 1
   - Terminal 3

⇒ **If 10 Ω or greater**

2.1. Vehicle OFF.

2.2. Test for less than 2 Ω in the ground circuit end to end.

⇒ If 2 Ω or greater, repair the open/high resistance in the circuit.

⇒ If less than 2 Ω, repair the open/high resistance in the ground connection.

⇓ **If less than 10 Ω**

3. Connect the X6 harness connector at the T24 Battery Charger - DC.

   Note: The following setup steps MUST BE PERFORMED EXACTLY in order to exercise the contactor.

4. Vehicle OFF, turn ON the park lamps.

   Note: DO NOT press the power button and enter Vehicle in Service Mode or Vehicle ON.

5. Command the Hybrid/EV Battery DC Charging Contactors ALL OPEN with a scan tool.

   Note: Ignore P0ABC after pulling the S15 Manual Service Disconnect.

6. Disconnect the S15 Manual Service Disconnect. Disconnect the X6 harness connector at the T24 Battery Charger - DC. Connect a test lamp between the control circuit terminal 4 and ground.

   Note: DO NOT use the scan tool Release Control button to turn OFF the contactor. Once the scan tool Release Control button is pushed the setup steps will need to be restarted from the beginning.

7. Verify that the test lamp is OFF.

⇒ **If the test lamp is ON**

7.1. Vehicle OFF, turn OFF the park lamps. Remove the test lamp. Disconnect the X1 harness connector at the K114B Hybrid Powertrain Control Module 2. Vehicle in Service Mode.

7.2. Test for less than 1 V between the control circuit and ground.

⇒ If 1 V or greater, repair the short to voltage on the circuit.

⇒ If less than 1 V, replace the K114B Hybrid/EV Powertrain Control Module 2.

⇓ **If the test lamp is OFF**

8. Command the Hybrid/EV Battery DC Charging Positive Contactor CLOSED and ALL OPEN with a scan tool.

9. Verify that the test lamp turns ON and OFF.

⇒ **If the test lamp does not turn ON and OFF**

9.1. Vehicle OFF, turn OFF the park lamps. Remove the test lamp. Disconnect the X1 harness connector at the K114B Hybrid/EV Powertrain Control Module 2.

9.2. Test for infinite resistance between control circuit and ground.

⇒ If less than infinite resistance, repair the short to ground on the circuit.

⇓ If infinite resistance

9.3. Test for less than 2 Ω in the control circuit end to end.

⇒ If 2 Ω or greater, repair the open/high resistance in the circuit.

⇒ If less than 2 Ω, replace the K114B Hybrid/EV Powertrain Control Module 2.

⇓ **If the test lamp does turn ON and OFF**

10. Replace the T24 Battery Charger - DC.

Repair Instructions

Perform the *Diagnostic Repair Verification on page 6-123* after completing the repair.

Control Module References on page 6-3 for T24 battery charger - DC and hybrid/EV powertrain control module 2 replacement, programming, and setup.

DTC P301E

Diagnostic Instructions

- Perform the *Diagnostic System Check - Vehicle on page 6-91* prior to using this diagnostic procedure.
- Review *Strategy Based Diagnosis on page 6-83* for an overview of the diagnostic approach.
- *Diagnostic Procedure Instructions on page 6-84* provides an overview of each diagnostic category.

DTC Descriptors

DTC P301E: Hybrid/EV Battery DC Charging Contactors Opened Under Load - DC Charging Disabled

Circuit/System Description

The hybrid/EV battery contains 6 high voltage contactors for normal operation and regular (AC 120V) charging, and 1 module. In vehicles with DC charging capability, there are two additional DC contactors that are housed in the battery charger - DC. The high voltage contactors allow the high voltage DC batteries to be connected to the vehicle or safely contain the high voltage DC within the hybrid/EV battery assembly. The 8 high voltage contactors consist of a main positive high voltage contactor, main negative high voltage contactor, AC charge positive high voltage contactor, AC charge negative high voltage contactor, multi-function high voltage contactor, precharge contactor, DC positive contactor, and DC negative contactor. The 1 module is the hybrid/EV battery pack coolant heater module. The contactors and module close and open in a specific sequence controlled by the hybrid/EV powertrain control module 2. The hybrid/EV powertrain control module 2 supplies voltage to the control circuit for the high voltage contactors/module. Ground is provided through the case ground and chassis.

The hybrid/EV powertrain control module 2 measures internal voltages, currents, and temperatures within the battery charger - DC and charge receptacle and verifies they are within the proper range. During DC charging the hybrid/EV powertrain control module 2 monitors for the charging cable being disconnected while under load during DC charging.

Conditions for Running the DTC

The charge current is greater than 50 A for 12.5 ms.

Conditions for Setting the DTC

The accumulated current when DC charging contactors are opened is greater than 30,000 A.

Action Taken When the DTC Sets

DTC P301E is a type A DTC.

Conditions for Clearing the DTC

- DTC P301E is a type A DTC.
- •The *DC Charging Disabled Reset on page 9-656* function must be performed with a scan tool before clear codes

Reference Information

Schematic Reference

Plug-In Charging Schematics on page 9-553

Connector End View Reference

Component Connector End Views on page 11-455

Description and Operation

Plug-In Charging System Description and Operation on page 9-657

Electrical Information Reference

- *Circuit Testing on page 11-871*
- *Connector Repairs on page 11-895*
- *Testing for Intermittent Conditions and Poor Connections on page 11-877*
- *Wiring Repairs on page 11-883*

DTC Type Reference

Powertrain Diagnostic Trouble Code (DTC) Type Definitions on page 6-92

Scan Tool Reference

Control Module References on page 6-3 for scan tool information

Special Tools

- *EL-48900* HEV Safety Kit
- *EL-50772* Insulation Multimeter

For equivalent regional tools, refer to *Special Tools on page 9-549*.

Circuit/System Verification

1. Vehicle in Service Mode.

   Note: The DC Charge Port Temperature should be close to ambient temperature without the cord set plugged in.

2. Observe the scan tool DC Charge Port Temperature parameter. The reading should be between -40 and +150° C (-40 and +302° F).

⇒ **The reading is not within the specified range**

Refer to Circuit/System Testing.

⇓ **The reading is within the specified range**

Note: Damage can include cracks, breaks, bent pins or missing parts.

3. Vehicle OFF. Visually inspect the X98 Hybrid/EV battery Charger Recepticle and high voltage cables for damage.

⇒ **The recepticle or cables are damaged**

Replace the X98 Hybrid/EV battery Charger Recepticle.

⇓ **The recepticle and cables are visually OK**

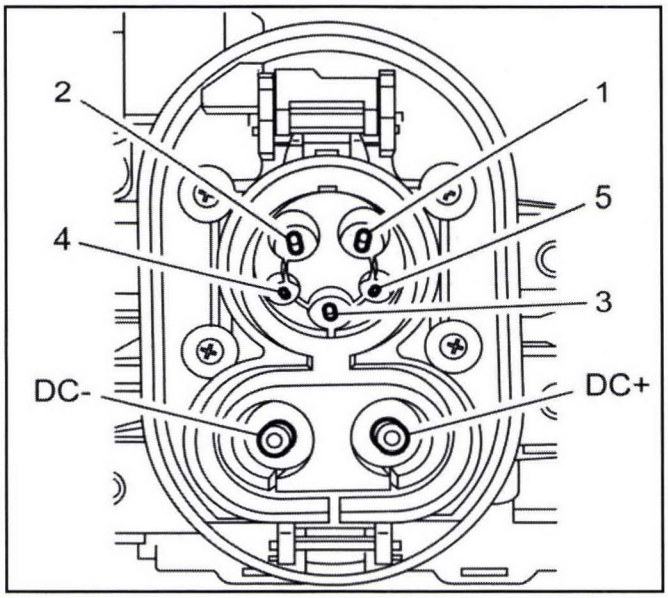

3702546

Note: The following continuity tests must be performed using an Insulation Multimeter. Select the Isolation test setting, then select the 500 V range.

4. With the Insulation Multimeter, set on the Isolation test setting, test for greater than 750k Ω between the harness connector terminals listed below and chassis ground:
   - Terminal DC−
   - Terminal DC+

⇒ **If less than 750k Ω**

Replace the X98 Hybrid/EV battery Charger Recepticle.

⇓ **If 750k Ω or greater**

5. Verify that DTC P301F does not set while operating the vehicle within the Conditions for Running the DTC.

⇒ **If the DTC is set**

Contact the GM Technical Assistance Center to report a DC Charge Station problem.

⇓ **If the DTC is not set**

6. All OK.

Circuit/System Testing

1. Vehicle OFF and all vehicle systems OFF. Disconnect the X2 harness connector at the X98 Hybrid/EV Battery Charger Receptacle. It may take up to 2 min for all vehicle systems to power down.
2. Test for less than 10 Ω between the low reference terminal 6 and ground.

⇒ **If 10 Ω or greater**

2.1. Vehicle OFF, disconnect the X2 harness connector at the K114B Hybrid/EV Powertrain Control Module 2.

2.2. Test for less than 2 Ω in the low reference circuit end to end.

⇒ If 2 Ω or greater, repair the open/high resistance in the circuit

⇒ If less than 2 Ω, replace the K114B Hybrid/EV Powertrain Control Module 2.

⇓ **If less than 10 Ω**

3. Vehicle in Service Mode.
4. Test for 4.8–4.95 V between the signal circuit terminal 5 and ground.

⇒ **If less than 4.8 V**

4.1. Vehicle OFF, disconnect the X2 harness connector at the K114B Hybrid/EV Powertrain Control Module 2.

4.2. Test for infinite resistance between the signal circuit and ground

⇒ If less infinite resistance, repair the short to ground on the circuit.

⇓ If infinite resistance

4.3. Test for less than 2 Ω in the signal circuit end to end.

⇒ If 2 Ω or greater, repair the open/high resistance in the circuit

⇒ If less than 2 Ω, replace the K114B Hybrid/EV Powertrain Control Module 2.

⇒ **If greater than 4.95 V**

4.1. Vehicle OFF, disconnect the X2 harness connector at the K114B Hybrid/EV Powertrain Control Module 2. Vehicle in Service Mode.

4.2. Test for less than 1 V between the signal circuit and ground.

⇒ If between 1–5.2 V, repair the short to voltage on the circuit.

⇒ If greater than 5.2 V, repair the short to voltage on the circuit and replace the X98 Hybrid/EV Battery Charger Receptacle.

⇒ If less than 1 V, replace the K114B Hybrid/EV Powertrain Control Module 2.

⇓ **If between 4.8–4.95 V**

5. Replace the X98 Hybrid/EV Battery Charger Receptacle.

Component Testing

1. Vehicle OFF and all vehicle systems OFF. Disconnect the X2 harness connector at the X98 Hybrid/EV Battery Charger Receptacle.
2. Test for 3.20–4.20k Ω at approximately 21.11°C (70°F) between the signal terminal 5 and the low reference terminal 6.

⇒ **If not within the specified range**

Replace the X98 Hybrid/EV Battery Charger Receptacle.

⇓ **If within the specified range**

3. All OK.

Repair Instructions

Perform the *Diagnostic Repair Verification on page 6-123* after completing the repair.

- *Drive Motor Battery Charger Receptacle Replacement (Without quick charge) on page 9-652* or *Drive Motor Battery Charger Receptacle Replacement (With quick charge) on page 9-654*
- *Control Module References on page 6-3* for hybrid/EV powertrain control module 2 replacement, programming, and setup.

DTC P302B-P302D

Diagnostic Instructions

- Perform the *Diagnostic System Check - Vehicle on page 6-91* prior to using this diagnostic procedure.
- Review *Strategy Based Diagnosis on page 6-83* for an overview of the diagnostic approach.
- *Diagnostic Procedure Instructions on page 6-84* provides an overview of each diagnostic category.

DTC Descriptors

DTC P302B: Charge Port Lock Actuator Position Sensor Signal Out of Range Low
DTC P302C: Charge Port Lock Actuator Position Sensor Signal Out of Range High
DTC P302D: Charge Port Lock Actuator Position Sensor Circuit Performance

Circuit/System Description

The hybrid/EV powertrain control module 2 activates the charge port lock to prevent the DC charge cord from being disconnected during charging. The hybrid/EV powertrain control module 2 monitors the charge port lock any time the hybrid/EV powertrain control module 2 is awake. The hybrid/EV powertrain control module 2 monitors the command and the actuator position to verify proper operation.

Conditions for Running the DTC

P302B, P302C, and P302D

The vehicle 12 V battery system voltage is greater than 9 V.

Conditions for Setting the DTC

P302B

The charge port lock actuator position sensor circuit voltage feedback is less than 0.15 V.

P302C

The charge port lock actuator position sensor circuit voltage feedback is greater than 4.90 V.

P302D

The charge port lock actuator position sensor circuit voltage feedback is within an invaild range of 2.35–2.50 V.

Action Taken When the DTC Sets

DTC P302B, P302C, and P302D are type C DTCs.

Conditions for Clearing the DTC

DTC P302B, P302C, and P302D are type C DTCs.

Reference Information

Schematic Reference

Plug-In Charging Schematics on page 9-553

Connector End View Reference

Component Connector End Views on page 11-455

Description and Operation

Plug-In Charging System Description and Operation on page 9-657

Electrical Information Reference

- *Circuit Testing on page 11-871*
- *Connector Repairs on page 11-895*
- *Testing for Intermittent Conditions and Poor Connections on page 11-877*
- *Wiring Repairs on page 11-883*

DTC Type Reference

Powertrain Diagnostic Trouble Code (DTC) Type Definitions on page 6-92

Scan Tool Reference

Control Module References on page 6-3 for scan tool information

Circuit/System Verification

1. Vehicle in Service Mode. Depress the receptacle switch with a small screw driver. With a scan command the DC Charge Port Lock between UNLOCK and LOCK.

   Note: If the receptacle switch is not fully depressed the reading will remain below 2 V.

2. Observe the scan tool DC Charge Port Actuator Position Sensor parameter. The reading should change between 0.15–1.75 V (UNLOCKED) and 3.75–4.85 V (LOCKED).

⇒ **The reading are not within the specified ranges**

Refer to Circuit/System Testing.

⇓ **The reading are within the specified ranges**

3. Verify that DTC DTC P302B, P302C, or P302D is not set.

⇒ **If any of the DTCs are set**

Refer to Circuit/System Testing.

⇓ **If none of the DTCs are set**

4. All OK.

Circuit/System Testing

1. Vehicle OFF and all vehicle systems OFF. Disconnect the X2 harness connector at the X98 Hybrid/EV Battery Charger Receptacle. It may take up to 2 min for all vehicle systems to power down.
2. Test for less than 10 Ω between the low reference terminal 3 and ground.

⇒ **If 10 Ω or greater**

2.1. Vehicle OFF, disconnect the X1 harness connector at the K114B Hybrid/EV Powertrain Control Module 2.

2.2. Test for less than 2 Ω in the low reference circuit end to end.

⇒ If 2 Ω or greater, repair the open/high resistance in the circuit.

⇒ If less than 2 Ω, replace the K114B Hybrid/EV Powertrain Control Module 2.

⇓ **If less than 10 Ω**

3. Vehicle in Service Mode.
4. Test for 4.8–5.2 V between the 5 V reference circuit terminal 1 and ground.

⇒ **If less than 4.8 V**

4.1. Vehicle OFF, disconnect the X2 harness connector at the K114B Hybrid/EV Powertrain Control Module 2.

4.2. Test for infinite resistance between the 5 V reference circuit and ground.

⇒ If less infinite resistance, repair the short to ground on the circuit.

⇓ If infinite resistance

4.3. Test for less than 2 Ω in the 5 V reference circuit end to end.

⇒ If 2 Ω or greater, repair the open/high resistance in the circuit.

⇒ If less than 2 Ω, replace the K114B Hybrid/EV Powertrain Control Module 2.

⇒ **If greater than 5.2 V**

4.1. Vehicle OFF, disconnect the X2 harness connector at the K114B Hybrid/EV Powertrain Control Module 2. Vehicle in Service Mode.

4.2. Test for less than 1 V between the 5 V reference circuit and ground.

⇒ If 1 V or greater, repair the short to voltage on the circuit.

⇒ If less than 1 V, replace the K114B Hybrid/EV Powertrain Control Module 2.

⇓ **If between 4.8–5.2 V**

5. Verify the scan tool DC Charge Port Actuator Position Sensor parameter is less than 0.5 V.

⇒ **If 0.5 V or greater**

5.1. Vehicle OFF, disconnect the X1 harness connector at the K114B Hybrid/EV Powertrain Control Module 2. Vehicle in Service Mode.

5.2. Test for less than 1 V between the signal circuit terminal 2 and ground.

⇒ If 1 V or greater, repair the short to voltage on the circuit.

⇒ If less than 1 V, replace the K114B Hybrid/EV Powertrain Control Module 2.

⇓ **If less than 0.5 V**

6. Install a 3 A fused jumper wire between the signal circuit terminal 2 and the 5 V reference circuit terminal 1.
7. Verify the scan tool DC Charge Port Lock Position Sensor parameter is greater than 4.95 V.

⇒ **If 4.95 V or less**

7.1. Vehicle OFF, remove the jumper wire. Disconnect the X1 harness connector at the K114B Hybrid/EV Powertrain Control Module 2.

7.2. Test for infinite resistance between the signal circuit and ground.

⇒ If less infinite resistance, repair the short to ground on the circuit.

⇓ If infinite resistance

7.3. Test for less than 2 Ω in the signal circuit end to end.

⇒ If 2 Ω or greater, repair the open/high resistance in the circuit.

⇒ If less than 2 Ω, replace the K114B Hybrid/EV Powertrain Control Module 2.

⇓ **If greater than 4.95 V**

8. Replace the X98 Hybrid/EV Battery Charger Receptacle.

Repair Instructions

Perform the *Diagnostic Repair Verification on page 6-123* after completing the repair.

- *Drive Motor Battery Charger Receptacle Replacement (Without quick charge) on page 9-652* or *Drive Motor Battery Charger Receptacle Replacement (With quick charge) on page 9-654*
- *Control Module References on page 6-3* for hybrid/EV powertrain control module 2 replacement, programming, and setup.

DTC P302F

Diagnostic Instructions

- Perform the *Diagnostic System Check - Vehicle on page 6-91* prior to using this diagnostic procedure.
- Review *Strategy Based Diagnosis on page 6-83* for an overview of the diagnostic approach.
- *Diagnostic Procedure Instructions on page 6-84* provides an overview of each diagnostic category.

DTC Descriptors

DTC P302F: Hybrid/EV Battery DC Charging System Isolation Fault

Circuit/System Description

The hybrid/EV battery contains 6 high voltage contactors for normal operation and regular (AC 120V) charging, and 1 module. In vehicles with DC charging capability, there are two additional DC contactors that are housed in the battery charger - DC. The high voltage contactors allow the high voltage DC batteries to be connected to the vehicle or safely contain the high voltage DC within the hybrid/EV battery assembly. The 8 high voltage contactors consist of a main positive high voltage contactor, main negative high voltage contactor, AC charge positive high voltage contactor, AC charge negative high voltage contactor, multi-function high voltage contactor, precharge contactor, DC positive contactor, and DC negative contactor. The 1 module is the hybrid/EV battery pack coolant heater module. The contactors and module close and open in a specific sequence controlled by the hybrid/EV powertrain control module 2. The hybrid/EV powertrain control module 2 supplies voltage to the control circuit for the high voltage contactors/module. Ground is provided through the case ground and chassis.

The hybrid/EV powertrain control module 2 measures internal voltages, currents, and temperatures within the battery charger - DC and charge receptacle and verifies they are within the proper range.

Conditions for Running the DTC

- The vehicle 12 V battery system voltage is greater than 10.2 V.
- The DC charge cable is connected.
- The vehicle is charging.
- The battery charger – DC positive contactor is commanded CLOSED.
- The battery charger – DC negative contactor is commanded CLOSED.
- DTC P3002, P3003, P3005, P3006, P301F, P3020, P3021, or P3022 is not set.

  OR
- The vehicle 12 V battery system voltage is greater than 10.2 V.
- The DC charge cable is connected.
- The charge mode is precharge.
- The battery charger – DC positive contactor is commanded OPEN.
- The battery charger – DC negative contactor is commanded OPEN.
- The difference between the sum of DC charger positive and negative voltage sensors and the battery voltage is less than 45 V for 2 s.
- DTC P3002, P3003, P3005, P3006, P301F, P3020, P3021, or P3022 is not set.

Conditions for Setting the DTC

- The DC negative charging voltage over DC positive charging voltage is greater than 3 V.

  OR
- The DC positive charging voltage over DC negative charging voltage is greater than 3 V.

Action Taken When the DTC Sets

DTC P302F is type A DTC.

Conditions for Clearing the DTC

DTC P302F is type A DTC.

Diagnostic Aids

- A single high voltage contactor stuck closed can set DTC P302F.
- Condensation or water intrusion into the battery charger – DC may cause DTC P302F to set.

Reference Information

Schematic Reference

Plug-In Charging Schematics on page 9-553

Connector End View Reference

Component Connector End Views on page 11-455

Description and Operation

Plug-In Charging System Description and Operation on page 9-657

Electrical Information Reference

- *Circuit Testing on page 11-871*
- *Connector Repairs on page 11-895*
- *Testing for Intermittent Conditions and Poor Connections on page 11-877*
- *Wiring Repairs on page 11-883*

DTC Type Reference

Powertrain Diagnostic Trouble Code (DTC) Type Definitions on page 6-92

Scan Tool Reference

Control Module References on page 6-3 for scan tool information

Circuit/System Verification

1. Verify that DTC P0AA1, P0AA4, P0AD9, P0ADD, P0AE2, P0AE4, P0D0A, P0D11, P1EBC, P1EBE-P1EC0, P1EC3-P1EC5, P1AF0, P1AF4, P1AF5, P1E1B-P1E1F, P1E20-P1E22, P1B0B, P1B0C, P3002, P3003, P3005, P3006, P3015, P3018, P301B-P301F, P3020, P3021, or P3022 is not set.

⇒ **If any of the DTCs are set**

Refer to *Diagnostic Trouble Code (DTC) List - Vehicle on page 6-92*.

⇓ **If none of the DTCs are set**

2. Observe the scan tool DC Negative Supply Isolation Voltage parameter. The reading should be 0 V.

⇒ **If greater than 0 V**

Note: The following setup steps MUST BE PERFORMED EXACTLY in order to exercise the contactors.

2.1. Vehicle OFF. Turn ON the park lamps.

Note:

- **DO NOT** press the power button and enter Vehicle in Service Mode or Vehicle ON.
- Ignore P0ABC after pulling the S15 Manual Service Disconnect.

2.2. Command the Hybrid/EV Battery Contactors ALL OPEN with a scan tool.

2.3. Disconnect the S15 Manual Service Disconnect.

Note:

- **DO NOT** use the Release Control button to turn OFF any of the contactors. Once the Release Control button is pushed the Circuit/System Verification will need to be restarted from the beginning.
- The following steps can be performed in any sequence or a single contactor can be exercised to verify a complaint.

2.4. Command the Hybrid/EV Battery DC Charging Positive Contactor CLOSED and ALL OPEN with a scan tool while listening for the contactor to close and open.

2.5. Verify the Hybrid/EV Battery DC Charging Positive Contactor is heard closing and opening.

⇒ If the Hybrid/EV Battery DC Charging Positive Contactor does not open and close, refer to Hybrid/EV Battery DC Charging Positive Contactor.

⇒ If the Hybrid/EV Battery DC Charging Positive Contactor does open and close, refer to Hybrid/EV Battery DC Charging Negative Voltage Sensor.

⇓ **If 0 V**

3. Observe the scan tool DC Positive Supply Isolation Voltage parameter. The reading should be 0 V.

⇒ **If greater than 0 V**

Note: The following setup steps MUST BE PERFORMED EXACTLY in order to exercise the contactors.

3.1. Vehicle OFF. Turn ON the park lamps.

Note:

- **DO NOT** press the power button and enter Vehicle in Service Mode or Vehicle ON.
- Ignore P0ABC after pulling the S15 Manual Service Disconnect.

3.2. Command the Hybrid/EV Battery Contactors ALL OPEN with a scan tool.

3.3. Disconnect the S15 Manual Service Disconnect.

Note:

- **DO NOT** use the Release Control button to turn OFF any of the contactors. Once the Release Control button is pushed the Circuit/System Verification will need to be restarted from the beginning.
- The following steps can be performed in any sequence or a single contactor can be exercised to verify a complaint.

3.4. Command the Hybrid/EV Battery DC Charging Positive Contactor CLOSED and ALL OPEN with a scan tool while listening for the contactor to close and open.

3.5. Verify the Hybrid/EV Battery DC Charging Positive Contactor is heard closing and opening.

⇒ If the Hybrid/EV Battery DC Charging Negative Contactor does not open and close, refer to Hybrid/EV Battery DC Charging Negative Contactor.

⇒ If the Hybrid/EV Battery DC Charging Negative Contactor does open and close, refer to Hybrid/EV Battery DC Charging Positive Voltage Sensor.

⇓ **If 0 V**

4. Refer to DC Charging System Isolation Fault

Circuit/System Testing

Hybrid/EV Battery DC Charging Negative Voltage Sensor

1. Vehicle OFF and all vehicle systems OFF. It may take up to 2 min for all vehicle systems to power down. Remove the High Voltage Disconnect Circuit Connector Cover. Refer to*High Voltage Disconnect Circuit Connector Cover Replacement on page 9-174*. Disconnect the X7 harness connector at the T24 Battery Charger – DC.
2. Test for less than 10 Ω between the ground circuit terminal 7 and ground.

⇒ **If 10 Ω or greater**

2.1. Vehicle OFF, disconnect the X1 harness connector at the K114B Hybrid/EV Powertrain Control Module 2.

2.2. Test for less than 2 Ω in the ground circuit end to end.

⇒ If 2 Ω or greater, repair the open/high resistance in the circuit.

⇒ If less than 2 Ω, replace the K114B Hybrid/EV Powertrain Control Module 2.

⇓ **If less than 10 Ω**

3. Vehicle in Service Mode.
4. Test for 4.8–5.2 V between the 5 V reference circuit terminal 6 and ground.

⇒ **If less than 4.8 V**

4.1. Vehicle OFF, disconnect the X1 and X2 harness connectors at the K114B Hybrid/EV Powertrain Control Module 2.

4.2. Test for infinite resistance between the 5 V reference circuit terminal 6 X7 and ground.

⇒ If less infinite resistance, repair the short to ground on the circuit.

⇓ If infinite resistance

4.3. Test for infinite resistance between the 5 V reference circuit terminal 5 X2 and ground.

⇒ If less infinite resistance, repair the short to ground on the circuit.

⇓ If infinite resistance

4.4. Test for less than 2 Ω in the 5 V reference circuit terminal 6 X7 end to end.

⇒ If 2 Ω or greater, repair the open/high resistance in the circuit

⇒ If less than 2 Ω, replace the K114B Hybrid/EV Powertrain Control Module 2.

⇒ **If 5.2 V or greater**

4.1. Vehicle OFF, disconnect the X1 and X2 harness connector at the K114B Hybrid/EV Powertrain Control Module 2. Vehicle in Service Mode.

4.2. Test for less than 1 V between the 5 V reference circuit terminal 6 X7 and ground.

⇒ If 1 V or greater, repair the short to voltage on the circuit.

⇓ If less than 1 V

4.3. Test for less than 1 V between the 5 V reference circuit terminal 5 X2 and ground.

⇒ If 1 V or greater, repair the short to voltage on the circuit.

⇒ If less than 1 V, replace the K114B Hybrid/EV Powertrain Control Module 2.

⇓ **If within the specified range**

5. Test for less than 1 V between the signal circuit terminal 12 and ground.

⇒ **If 1 V or greater**

5.1. Vehicle OFF, disconnect the X1 harness connector at the K114B Hybrid/EV Powertrain Control Module 2. Vehicle in Service Mode.

5.2. Test for less than 1 V between the signal circuit and ground.

⇒ If between 1–5 V, repair the short to voltage on the circuit.

⇒ If greater than 5 V, repair the short to voltage on the circuit and replace the T24 Battery Charger – DC.

⇓ If less than 1 V

5.3. Replace the K114B Hybrid/EV Powertrain Control Module 2.

5.4. Verify that DTC P3002, P3003, P301F, or P3020 does not set while operating the vehicle within the Conditions for Running the DTC.

⇒ If any of the DTCs are set, replace the T24 Battery Charger – DC.

⇓ If none of the DTCs are set

5.5. All OK.

⇓ **If less than 1 V**

6. Vehicle OFF, install a 3 A fused jumper wire between the signal circuit terminal 12 and the 5 V reference circuit terminal 6. Vehicle in Service Mode.

7. Verify the scan tool DC Negative Supply Isolation Voltage parameter is greater than 500 V.

⇒ **If less than 500 V**

7.1. Test for infinite resistance between the signal circuit and ground.

⇒ If less infinite resistance, repair the short to ground on the circuit.

⇓ If infinite resistance

7.2. Test for less than 2 Ω in the signal circuit end to end.

⇒ If 2 Ω or greater, repair the open/high resistance in the circuit.

⇒ If less than 2 Ω, replace the K114B Hybrid/EV Powertrain Control Module 2.

⇓ **If 500 V or greater**

8. Replace the T24 Battery Charger – DC.

Hybrid/EV Battery DC Charging Positive Voltage Sensor

1. Vehicle OFF and all vehicle systems OFF. It may take up to 2 min for all vehicle systems to power down. Remove the High Voltage Disconnect Circuit Connector Cover. Refer to*High Voltage Disconnect Circuit Connector Cover Replacement on page 9-174*. Disconnect the X7 harness connector at the T24 Battery Charger – DC.
2. Test for less than 10 Ω between the ground circuit terminal 7 and ground.

⇒ **If 10 Ω or greater**

2.1. Vehicle OFF, disconnect the X1 harness connector at the K114B Hybrid/EV Powertrain Control Module 2.

2.2. Test for less than 2 Ω in the ground circuit end to end.

⇒ If 2 Ω or greater, repair the open/high resistance in the circuit.

⇒ If less than 2 Ω, replace the K114B Hybrid/EV Powertrain Control Module 2.

⇓ **If less than 10 Ω**

3. Vehicle in Service Mode.
4. Test for 4.8–5.2 V between the 5 V reference circuit terminal 6 and ground.

⇒ **If less than 4.8 V**

4.1. Vehicle OFF, disconnect the X1 and X2 harness connectors at the K114B Hybrid/EV Powertrain Control Module 2.

4.2. Test for infinite resistance between the 5 V reference circuit terminal 6 X7 and ground.

⇒ If less infinite resistance, repair the short to ground on the circuit.

⇓ If infinite resistance

4.3. Test for infinite resistance between the 5 V reference circuit terminal 5 X2 and ground.

⇒ If less infinite resistance, repair the short to ground on the circuit.

⇓ If infinite resistance

4.4. Test for less than 2 Ω in the 5 V reference circuit terminal 6 X7 end to end.

⇒ If 2 Ω or greater, repair the open/high resistance in the circuit

⇒ If less than 2 Ω, replace the K114B Hybrid/EV Powertrain Control Module 2.

⇒ **If 5.2 V or greater**

4.1. Vehicle OFF, disconnect the X1 and X2 harness connector at the K114B Hybrid/EV Powertrain Control Module 2. Vehicle in Service Mode.

4.2. Test for less than 1 V between the 5 V reference circuit terminal 6 X7 and ground.

⇒ If 1 V or greater, repair the short to voltage on the circuit.

⇓ If less than 1 V

4.3. Test for less than 1 V between the 5 V reference circuit terminal 5 X2 and ground.

⇒ If 1 V or greater, repair the short to voltage on the circuit.

⇒ If less than 1 V, replace the K114B Hybrid/EV Powertrain Control Module 2.

⇓ **If within the specified range**

5. Test for less than 1 V between the signal circuit terminal 11 and ground.

⇒ **If 1 V or greater**

5.1. Vehicle OFF, disconnect the X1 harness connector at the K114B Hybrid/EV Powertrain Control Module 2. Vehicle in Service Mode.

5.2. Test for less than 1 V between the signal circuit and ground.

⇒ If between 1–5 V, repair the short to voltage on the circuit.

⇒ If greater than 5 V, repair the short to voltage on the circuit and replace the T24 Battery Charger – DC.

⇓ If less than 1 V

5.3. Replace the K114B Hybrid/EV Powertrain Control Module 2.

5.4. Verify that DTC P3002, P3003, P301F, or P3020 does not set while operating the vehicle within the Conditions for Running the DTC.

⇒ If any of the DTCs are set, replace the T24 Battery Charger – DC.

⇓ If none of the DTCs are set

5.5. All OK.

⇓ **If less than 1 V**

6. Vehicle OFF, install a 3 A fused jumper wire between the signal circuit terminal 11 and the 5 V reference circuit terminal 6. Vehicle in Service Mode.

7. Verify the scan tool DC Positive Supply Isolation Voltage parameter is greater than 500 V.

⇒ **If less than 500 V**

7.1. Test for infinite resistance between the signal circuit and ground.

⇒ If less infinite resistance, repair the short to ground on the circuit.

⇓ If infinite resistance

7.2. Test for less than 2 Ω in the signal circuit end to end.

⇒ If 2 Ω or greater, repair the open/high resistance in the circuit.

⇒ If less than 2 Ω, replace the K114B Hybrid/EV Powertrain Control Module 2.

⇓ **If 500 V or greater**

8. Replace the T24 Battery Charger – DC.

Hybrid/EV Battery DC Charging Negative Contactor

1. Vehicle OFF, remove the High Voltage Disconnect Circuit Connector Cover. Refer to*High Voltage Disconnect Circuit Connector Cover Replacement on page 9-174*. Disconnect the X6 harness connector at the T24 Battery Charger - DC.
2. Test for less than 10 Ω between the ground circuit terminals listed below and ground.
   - Terminal 1
   - Terminal 3

⇒ **If 10 Ω or greater**

2.1. Vehicle OFF.

2.2. Test for less than 2 Ω in the ground circuit end to end.

⇒ If 2 Ω or greater, repair the open/high resistance in the circuit.

⇒ If less than 2 Ω, repair the open/high resistance in the ground connection.

⇓ **If less than 10 Ω**

3. Connect the X6 harness connector at the T24 Battery Charger - DC.

   Note: The following setup steps MUST BE PERFORMED EXACTLY in order to exercise the contactor.

4. Vehicle OFF, turn ON the park lamps.

   Note:

   - **DO NOT** press the power button and enter Vehicle in Service Mode or Vehicle ON.
   - Ignore P0ABC after pulling the S15 Manual Service Disconnect.

5. Command the Hybrid/EV Battery Contactors ALL OPEN with a scan tool.
6. Disconnect the S15 Manual Service Disconnect. Disconnect the X6 harness connector at the T24 Battery Charger - DC. Connect a test lamp between the control circuit terminal 4 and ground.
7. Verify that the test lamp is OFF.

⇒ **If the test lamp is ON**

7.1. Vehicle OFF, turn OFF the park lamps. Remove the test lamp. Disconnect the X1 harness connector at the K114B Hybrid Powertrain Control Module 2. Vehicle in Service Mode.

7.2. Test for less than 1 V between the control circuit and ground.

⇒ If 1 V or greater, repair the short to voltage on the circuit.

⇒ If less than 1 V, replace the K114B Hybrid Powertrain Control Module 2.

⇓ **If the test lamp is OFF**

Note: DO NOT use the Release Control button to turn OFF the contactor. Once the Release Control button is pushed the setup steps will need to be restarted from the beginning.

8. Command the Hybrid/EV Battery Negative Contactor CLOSED and ALL OPEN with a scan tool. Verify that the test lamp turns ON and OFF.

⇒ **If the test lamp does not turn ON and OFF**

8.1. Vehicle OFF, turn OFF the park lamps. Remove the test lamp. Disconnect the X1 harness connector at the K114B Hybrid Powertrain Control Module 2.

8.2. Test for infinite resistance between control circuit and ground.

⇒ If less than infinite resistance, repair the short to ground on the circuit.

⇓ If infinite resistance

8.3. Test for less than 2 Ω in the control circuit end to end.

⇒ If 2 Ω or greater, repair the open/high resistance in the circuit.

⇒ If less than 2 Ω, replace the K114B Hybrid Powertrain Control Module 2.

⇓ **If the test lamp does turn ON and OFF**

9. Replace the T24 Battery Charger - DC.

Hybrid/EV Battery DC Charging Positive Contactor

1. Vehicle OFF, remove the High Voltage Disconnect Circuit Connector Cover. Refer to*High Voltage Disconnect Circuit Connector Cover Replacement on page 9-174*. Disconnect the X6 harness connector at the T24 Battery Charger - DC.
2. Test for less than 10 Ω between the ground circuit terminals listed below and ground.
   - Terminal 1
   - Terminal 3

⇒ **If 10 Ω or greater**

2.1. Vehicle OFF.

2.2. Test for less than 2 Ω in the ground circuit end to end.

⇒ If 2 Ω or greater, repair the open/high resistance in the circuit.

⇒ If less than 2 Ω, repair the open/high resistance in the ground connection.

⇓ **If less than 10 Ω**

3. Connect the X6 harness connector at the T24 Battery Charger - DC.

   Note: The following setup steps MUST BE PERFORMED EXACTLY in order to exercise the contactor.

4. Vehicle OFF, turn ON the park lamps.

   Note:

   - **DO NOT** press the power button and enter Vehicle in Service Mode or Vehicle ON.
   - Ignore P0ABC after pulling the S15 Manual Service Disconnect.

5. Command the Hybrid/EV Battery Contactors ALL OPEN with a scan tool.
6. Disconnect the S15 Manual Service Disconnect. Disconnect the X6 harness connector at the T24 Battery Charger - DC. Connect a test lamp between the control circuit terminal 2 and ground.

   Note: DO NOT use the Release Control button to turn OFF the contactor. Once the Release Control button is pushed the setup steps will need to be restarted from the beginning.

7. Verify that the test lamp is OFF.

⇒ **If the test lamp is ON**

7.1. Vehicle OFF, turn OFF the park lamps. Remove the test lamp. Disconnect the X1 harness connector at the K114B Hybrid Powertrain Control Module 2. Vehicle in Service Mode.

7.2. Test for less than 1 V between the control circuit and ground.

⇒ If 1 V or greater, repair the short to voltage on the circuit.

⇒ If less than 1 V, replace the K114B Hybrid/EV Powertrain Control Module 2.

⇓ **If the test lamp is OFF**

8. Command the Hybrid/EV Battery Positive Contactor CLOSED and ALL OPEN with a scan tool.
9. Verify that the test lamp turns ON and OFF.

⇒ **If the test lamp does not turn ON and OFF**

9.1. Vehicle OFF, turn OFF the park lamps. Remove the test lamp. Disconnect the X1 harness connector at the K114B Hybrid/EV Powertrain Control Module 2.

9.2. Test for infinite resistance between control circuit and ground.

⇒ If less than infinite resistance, repair the short to ground on the circuit.

⇓ If infinite resistance

9.3. Test for less than 2 Ω in the control circuit end to end.

⇒ If 2 Ω or greater, repair the open/high resistance in the circuit.

⇒ If less than 2 Ω, replace the K114B Hybrid/EV Powertrain Control Module 2.

⇓ **If the test lamp does turn ON and OFF**

10. Replace the T24 Battery Charger - DC.

DC Charging System Isolation Fault

Danger: Always perform the High Voltage Disabling procedure prior to servicing any High Voltage component or connection. Personal Protection Equipment (PPE) and proper procedures must be followed.

The High Voltage Disabling procedure includes the following steps:

- ***Identify how to disable high voltage.***
- ***Identify how to test for the presence of high voltage.***
- ***Identify condition under which high voltage is always present and personal protection equipment (PPE) and proper procedures must be followed.***

Before working on any high voltage system, be sure to wear the following Personal Protection Equipment:

- ***Safety glasses with appropriate side shields when within 15 meters (50 feet) of the vehicle, either indoors or outdoors.***
- ***Certified and up-to-date Class "0" Insulation gloves rated at 1000V with leather protectors.***
  - ***Visually and functionally inspect the gloves before use.***
  - ***Wear the Insulation gloves with leather protectors at all times when working with the high voltage battery assembly, whether the system is energized or not.***

Failure to follow the procedures may result in serious injury or death.

1. Vehicle OFF, disable the high voltage. Refer to *High Voltage Disabling on page 9-363*.

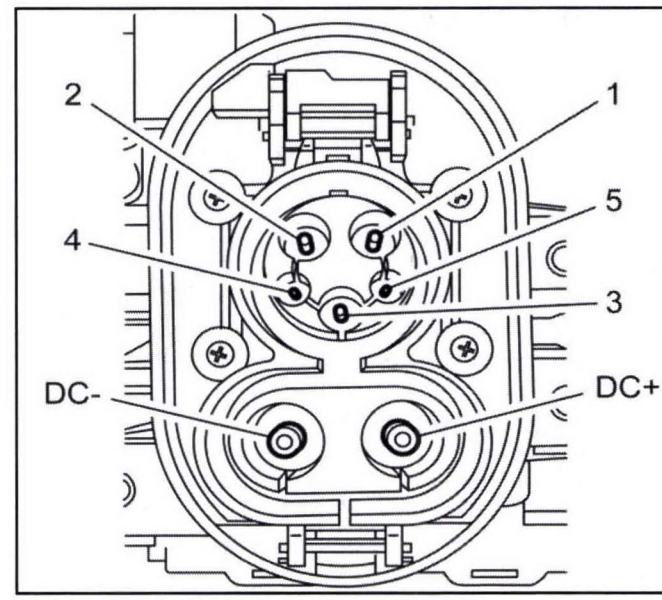

3702546

Note: The following continuity tests must be performed using an Insulation Multimeter. Select the Isolation test setting, then select the 500 V range.

2. With the *EL-50772* Insulation Multimeter, set on the Isolation test setting, test for greater than 750k Ω between the terminals listed below at the X98 Hybrid/EV Battery Charger Receptacle and chassis ground;
   - Terminal DC−
   - Terminal DC+

⇒ **If less than 750k Ω on either circuit**

2.1. Vehicle OFF, remove the High Voltage Disconnect Circuit Connector Cover. Refer to*High Voltage Disconnect Circuit Connector Cover Replacement on page 9-174*. Disconnect the X3 harness connector from T24 Battery Charger – DC.

Note:

- The following continuity tests must be performed using an Insulation Multimeter. Select the Isolation test setting, then select the 500 V range.
- The following tests are performed at the X98 Hybrid/EV Battery Charger Receptacle.

2.2. Test for greater than 750k Ω between the circuit terminals and chassis ground.

⇒ If greater than 750k Ω, replace the K1 14 V Power Module.

⇓ If less than 750k Ω

2.3. Disconnect the X4 harness connector from T24 Battery Charger – DC.

Note:

- The following continuity tests must be performed using an Insulation Multimeter. Select the Isolation test setting, then select the 500 V range.
- The following tests are performed at the X98 Hybrid/EV Battery Charger Receptacle.

2.4. Test for greater than 750k Ω between the circuit terminals and chassis ground.

⇒ If greater than 750k Ω, replace the K10 Coolant Heater Control Module.

⇓ If less than 750k Ω

2.5. Disconnect the X5 harness connector from T24 Battery Charger – DC.

Note:

- The following continuity tests must be performed using an Insulation Multimeter. Select the Isolation test setting, then select the 500 V range.
- The following tests are performed at the X98 Hybrid/EV Battery Charger Receptacle.

2.6. Test for greater than 750k Ω between the circuit terminals and chassis ground.

⇒ If greater than 750k Ω, replace the G1 AC Compressor.

⇓ If less than 750k Ω

2.7. Disconnect the X1 harness connector from T24 Battery Charger – DC.

Note:

- The following continuity tests must be performed using an Insulation Multimeter. Select the Isolation test setting, then select the 500 V range.
- The following tests are performed at the X98 Hybrid/EV Battery Charger Receptacle.

2.8. Test for greater than 750k Ω between the circuit terminals and chassis ground.

⇒ If greater than 750k Ω, replace the T6 Power Inverter Module.

⇓ If less than 750k Ω

2.9. Disconnect the X2 harness connector from T24 Battery Charger – DC.

Note:

- The following continuity tests must be performed using an Insulation Multimeter. Select the Isolation test setting, then select the 500 V range.
- The following tests are performed at the X98 Hybrid/EV Battery Charger Receptacle.

2.10. Test for greater than 750k Ω between the circuit terminals and chassis ground.

⇒ If less than 750k Ω, replace the 300 V DC cables.

⇒ If greater than 750k Ω, replace the T24 Battery Charger – DC.

⇓ **If greater than 750k Ω on both circuits**

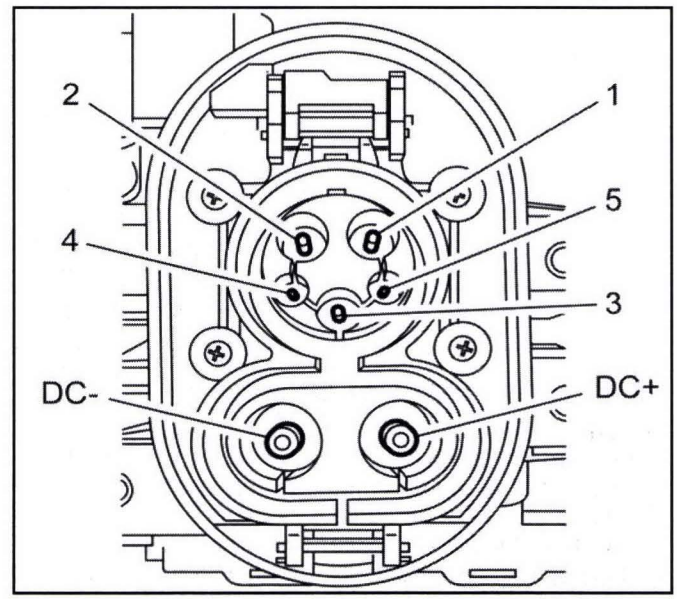

3702546

Note: The following continuity tests must be performed using an Insulation Multimeter. Select the Isolation test setting, then select the 500 V range.

3. With the *EL-50772* Insulation Multimeter, set on the Isolation test setting, test for greater than 750k Ω between the terminals listed below at the X98 Hybrid/EV Battery Charger Receptacle;
   - Terminal DC+ and terminal DC−
   - Terminal DC+ and terminal 3
   - Terminal DC− and terminal 3

⇒ **If less than 750k Ω on either circuit**

Replace the 300 V DC cables.

⇓ **If greater than 750k Ω on both circuits**

4. Verify that DTC P302F does not set while operating the vehicle within the Conditions for Running the DTC.

⇒ **If DTC P302F is set**

Contact the GM Technical Assistance Center to report a DC Charge Station problem.

⇓ **If DTC P302F is not set**

5. All OK.

Repair Instructions

Perform the *Diagnostic Repair Verification on page 6-123* after completing the repair.

- *300-Volt Battery Positive and Negative Cable Replacement (Drive Motor Generator Power Inverter Module to Drive Motor Battery) on page 9-454* or *300-Volt Battery Positive and Negative Cable Replacement (Drive Motor Generator Power Inverter Module to High Voltage Battery Disconnect Module) on page 9-457*
- *Air Conditioning Compressor Replacement on page 10-26*
- *Heater Coolant Heater Replacement on page 10-74*
- *Accessory DC Power Control Module Replacement on page 9-189*
- *Control Module References on page 6-3* for the battery charger – DC, hybrid/EV powertrain control module 2, power inverter module replacement, programming and setup.

Plug-In Charging Malfunction (without CBT)

Diagnostic Instructions

- Perform the *Diagnostic System Check - Vehicle on page 6-91* prior to using this diagnostic procedure.
- Review *Strategy Based Diagnosis on page 6-83* for an overview of the diagnostic approach.
- *Diagnostic Procedure Instructions on page 6-84* provides an overview of each diagnostic category.

Diagnostic Fault Information

Circuit	Short to Ground	Open/High Resistance	Short to Voltage	Signal Performance
Control Pilot Signal	P0CF4, P0CF5, P0CF6, P0CF9, P0D01, 1	P0CF4, P0CF5, P0CF6, 1	P0CF4, P0CF5, P0CF6, P0CF9,1	P0CF4, P0CF5, P0CF6, 1
Proximity Signal	P0D58, 1	P0D59, 1	P0D59, 1	—
110/120 A/C Line 1	1	P0D3F, P1EE6	1	—
110/120 A/C Line 2	1	P1EE6	1	—
110/120 A/C Ground	—	P0D59, 1	1	—
1. Plug In Charging Malfunction				

Circuit/System Description

The drive motor battery charger cable allows the vehicle to be charged using a common household power outlet. The drive motor battery charger cable contains LEDs that indicate the status of the drive motor battery charger cable. The drive motor battery charger cable automatically prohibits voltage transfer to the hybrid/EV battery charger receptacle and illuminates the indicator LEDs red if it senses internal faults or inadequate household voltage. If the drive motor battery charger cable senses no faults, voltage transfer to the hybrid/EV battery charger receptacle occurs and the indicator LEDs are illuminated green. Charging continues until Hybrid/EV Battery Pack State of Charge reaches 86% at which point the green indicator will flash slowly, indicating charging is complete.

Diagnostic Aids

The drive motor battery charger cable that displays flashing red status LEDs before plugging into the vehicle will need to be diagnosed first. The vehicle will not cause charging malfunction with flashing red status LEDs and the drive motor battery charger cable disconnected.

Reference Information

Schematic Reference

Plug-In Charging Schematics on page 9-553

Connector End View Reference

Component Connector End Views on page 11-455

Description and Operation

Plug-In Charging System Description and Operation on page 9-657

Electrical Information Reference

- *Circuit Testing on page 11-871*
- *Connector Repairs on page 11-895*
- *Testing for Intermittent Conditions and Poor Connections on page 11-877*
- *Wiring Repairs on page 11-883*

DTC Type Reference

Powertrain Diagnostic Trouble Code (DTC) Type Definitions on page 6-92

Scan Tool Reference

Control Module References on page 6-3 for scan tool information

Special Tools

EL-48900 HEV Safety Kit

For equivalent regional tools, refer to *Special Tools on page 9-658*.

Circuit/System Verification

1. Vehicle in Service Mode, verify no additional DTCs are set in other control modules.

⇒ **If additional DTCs are set**

Refer to *Diagnostic Trouble Code (DTC) List - Vehicle on page 6-92*.

⇓ **If no additional DTCs are set**

2. Connect the drive motor battery charger cable to household power outlet, but not the battery charger receptacle.
3. After 25 seconds, verify drive motor battery charger cable LEDs illuminate solid green.

⇒ **If drive motor battery charger cable LEDs do not illuminate solid green**

3.1. Connect a known good drive motor battery charger cable to the same household power outlet.

⇒ If known good drive motor battery charger cable LEDs illuminate solid green, have the service provider check for high frequency noise on the dedicated home outlet. If no high frequency noise is found, replace drive motor battery charger cable.

⇒ If known good drive motor battery charger cable LEDs do not illuminate solid green, have the service provider inspect the household power outlet for insufficient voltage, high frequency noise, or open/high resistance.

⇓ **If drive motor battery charger cable LEDs do illuminate solid green**

4. Refer to Circuit/System Testing.

Circuit/System Testing

Danger: Always perform the High Voltage Disabling procedure prior to servicing any High Voltage component or connection. Personal Protection Equipment (PPE) and proper procedures must be followed.

The High Voltage Disabling procedure includes the following steps:

- ***Identify how to disable high voltage.***
- ***Identify how to test for the presence of high voltage.***
- ***Identify condition under which high voltage is always present and personal protection equipment (PPE) and proper procedures must be followed.***

Before working on any high voltage system, be sure to wear the following Personal Protection Equipment:

- ***Safety glasses with appropriate side shields when within 15 meters (50 feet) of the vehicle, either indoors or outdoors.***
- ***Certified and up-to-date Class "0" Insulation gloves rated at 1000V with leather protectors.***
  - ***Visually and functionally inspect the gloves before use.***
  - ***Wear the Insulation gloves with leather protectors at all times when working with the high voltage battery assembly, whether the system is energized or not.***

Failure to follow the procedures may result in serious injury or death.

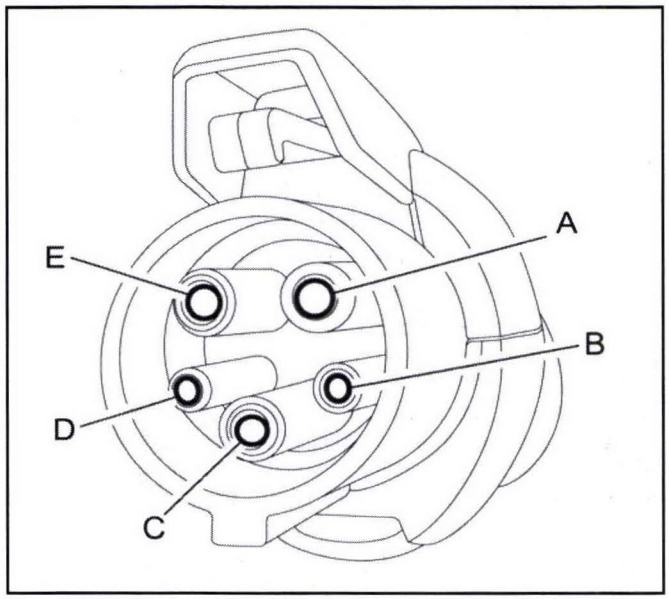

3631526

1. Test for B+ between the low voltage circuits listed below on drive motor battery charger cable.
   - Control pilot signal circuit terminal B
   - Proximity status signal circuit terminal D

⇒ **If not B+**

Replace drive motor battery charger cable.

⇓ **If B+**

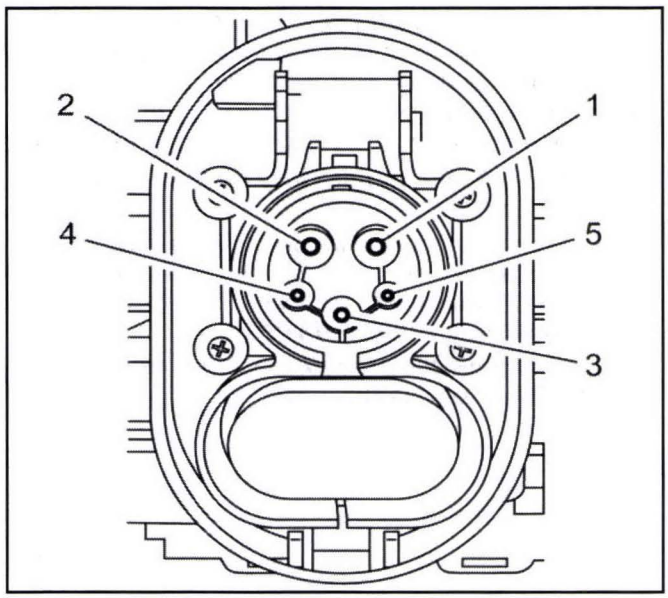

3702544

Note: The following tests are performed at the X98 Hybrid/EV Battery Charger Receptacle and not at the harness connector to the X98 Hybrid/EV Battery Charger Receptacle.

2. Vehicle OFF and all vehicle systems OFF. It may take up to 2 minutes for all vehicle systems to power down. Test for 100k Ω–4M Ω between the control pilot signal terminal 4 at the X98 Hybrid/EV Battery Charger Receptacle and ground.

⇒ **If 4M Ω greater**

2.1. Disconnect the X2 harness connector from K114B Hybrid/EV Powertrain Control Module 2

2.2. Test for 2 Ω in the control pilot signal circuit end to end.

⇒ If 2 Ω or greater, repair the open/high resistance in the circuit.

⇒ If less than 2 Ω, replace the K114B Hybrid/EV Powertrain Control Module 2.

⇒ **If less than 100k Ω**

2.1. Disconnect the X2 harness connector from K114B Hybrid/EV Powertrain Control Module 2

2.2. Test for infinite resistance between the control pilot signal circuit and ground.

⇒ If less than infinite resistance, repair the short to ground in the circuit.

⇒ If infinite resistance, replace the K114B Hybrid/EV Powertrain Control Module 2.

⇓ **If within the specified range**

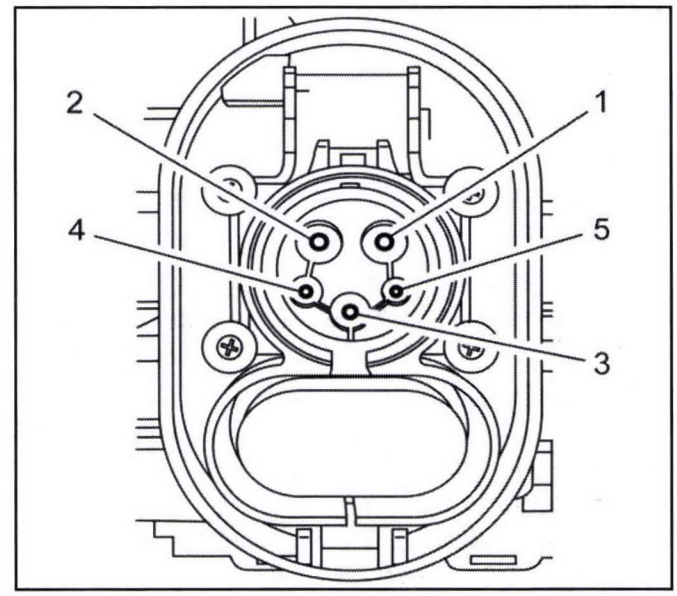

3702544

3. Test for less than 10 Ω between the 110/220 V A/C Ground terminal 3 at the X98 Hybrid/EV Battery Charger Receptacle and ground.

⇒ **If 10 Ω or greater**

Repair the open/high resistance in the circuit.

⇓ **If less than 10 Ω**

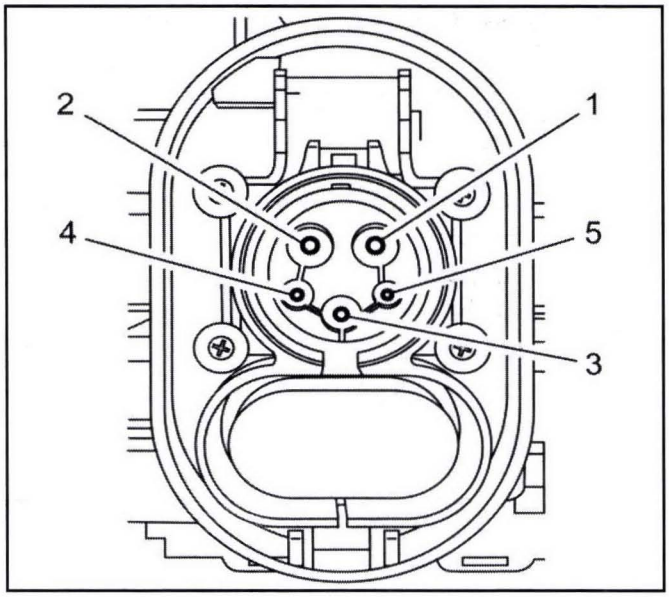

3702544

4. Vehicle in Service Mode.
5. Test for less than 1 V between the control pilot signal terminal 4 at the X98 Hybrid/EV Battery Charger Receptacle and ground.

⇒ **If 1 V or greater**

5.1. Vehicle OFF, disconnect the X2 harness connector from K114B Hybrid/EV Powertrain Control Module 2. Vehicle in Service Mode.

5.2. Test for less than 1 V between the control pilot signal circuit and ground.

⇒ If greater than 1 V, repair the short to voltage in the circuit.

⇒ If less than 1 V, replace the K114B Hybrid/EV Powertrain Control Module 2.

⇓ **If less than 1 V**

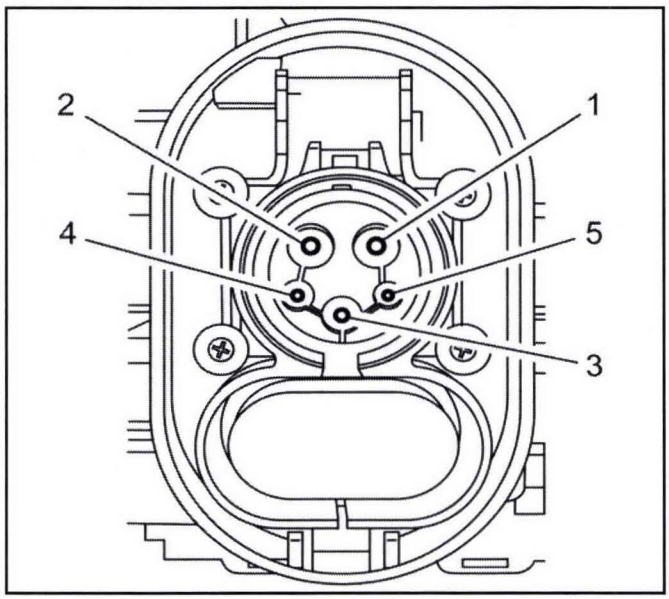

3702544

6. Test for 4.2–4.8 V between the proximity status signal terminal 5 at the X98 Hybrid/EV Battery Charger Receptacle and ground.

⇒ **If less than 4.2 V**

6.1. Vehicle OFF.

6.2. Test for infinite resistance between the proximity status signal circuit and ground.

⇒ If less than infinite resistance, repair the short to ground on the circuit.

⇓ If infinite resistance

6.3. Disconnect the X2 harness connector from K114B Hybrid/EV Powertrain Control Module 2.

6.4. Test for less than 2 Ω in the proximity status signal circuit end to end.

⇒ If 2 Ω or greater, repair the open/high resistance in the circuit.

⇒ If less than 2 Ω, replace the K114B Hybrid/EV Powertrain Control Module 2.

⇒ **If 4.8 V or greater**

6.1. Vehicle OFF, disconnect the X2 harness connector from K114B Hybrid/EV Powertrain Control Module 2. Vehicle in Service Mode.

6.2. Test for 0 V between the proximity status signal circuit and ground.

⇒ If greater than 0 V, repair the short to voltage in the circuit.

⇒ If 0 V, replace the K114B Hybrid/EV Powertrain Control Module 2.

⇓ **If within the specified range**

7. Vehicle OFF, disconnect the X3 harness connector from T18 Battery Charger.

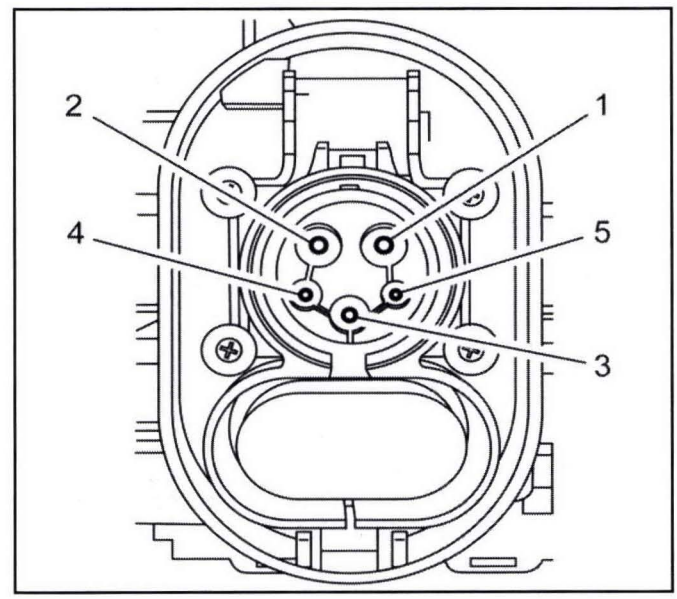

3702544

Note: The following tests are performed at the X98 Hybrid/EV Battery Charger Receptacle and not at the harness connector to the X98 Hybrid/EV Battery Charger Receptacle.

8. Test for infinite resistance between the terminals listed below at the X98 Hybrid/EV Battery Charger Receptacle;
   - 110/220 V A/C Line 1 terminal 1 and 110/220 V A/C Neutral Line 2 terminal 2
   - 110/220 V A/C Line 1 terminal 1 and 110/220 V A/C Ground terminal 3
   - 110/220 V A/C Line 1 terminal 1 and Control pilot signal circuit terminal 4
   - 110/220 V A/C Line 1 terminal 1 and Proximity status signal circuit terminal 5
   - 110/220 V A/C Neutral Line 2 terminal 2 and 110/220 V A/C Ground terminal 3
   - 110/220 V A/C Neutral Line 2 terminal 2 and Control pilot signal circuit terminal 4
   - 110/220 V A/C Neutral Line 2 terminal 2 and Proximity status signal circuit terminal 5
   - 110/220 V A/C Ground terminal 3 and Control pilot signal circuit terminal 4
   - 110/220 V A/C Ground terminal 3 and Proximity status signal circuit terminal 5
   - Control pilot signal circuit terminal 4 and Proximity status signal circuit terminal 5

⇒ **If less than infinite resistance**

Repair the short between the circuits.

⇓ **If infinite resistance**

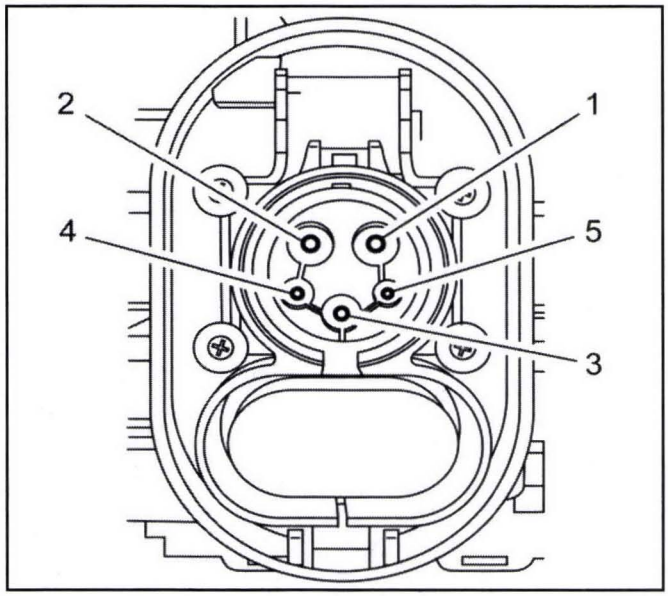

3702544

Note: The following tests are performed at the X98 Hybrid/EV Battery Charger Receptacle and not at the harness connector to the X98 Hybrid/EV Battery Charger Receptacle.

9. Test for less than 10 Ω between the terminals listed below;
   - 110/220 V A/C Line 1 terminal 1 at the X98 Hybrid/EV Battery Charger Receptacle and terminal 3 X3
   - 110/220 V A/C Neutral Line 2 terminal 2 at the X98 Hybrid/EV Battery Charger Receptacle and terminal 2 X3

⇒ **If 10 Ω or greater**

Repair the open/high resistance in the circuit.

⇓ **If less than 10 Ω**

⇓ **If infinite resistance**

10. Disconnect the harness connector from the X98 Hybrid/EV Battery Charger Receptacle.

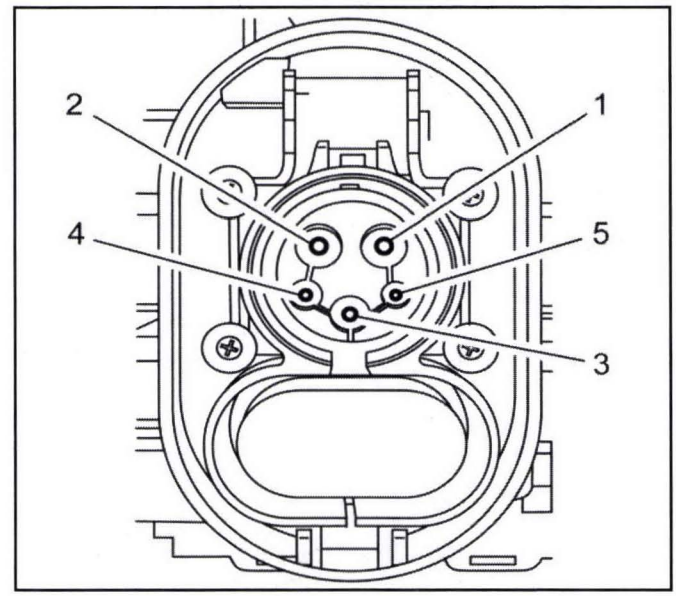

3702544

11. Test for 2.56–2.84k Ω between the 110/220 V A/C Ground terminal 3 and Proximity status signal circuit terminal 5 at the X98 Hybrid/EV Battery Charger Receptacle.

⇒ **If not within the specified range**

Replace the X98 Hybrid/EV Battery Charger Receptacle.

⇓ **If within the specified range**

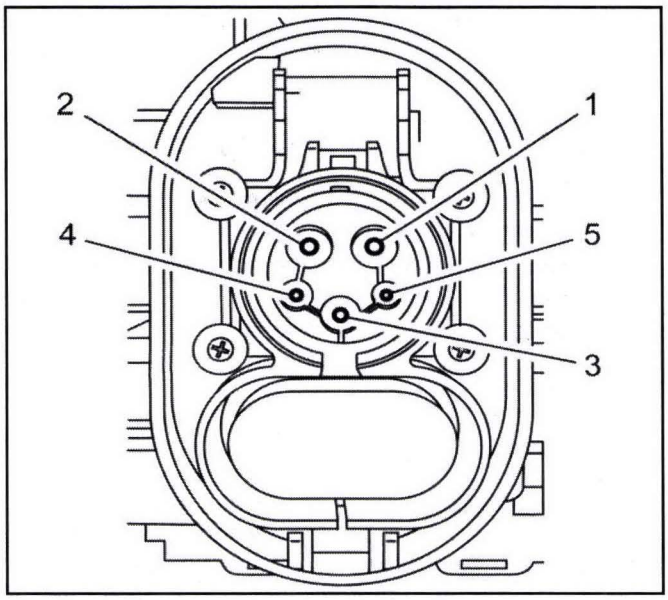

3702544

Note: This test is performed on the vehicle side of the harness connector.

12. Test for infinite resistance between the Proximity status signal circuit terminal 5 of the harness connector and ground.

⇒ **If less than infinite resistance**

Repair short to ground on the circuit.

⇓ **If infinite resistance**

13. Replace the T18 Battery Charger.

Repair Instructions

Perform the *Diagnostic Repair Verification on page 6-123* after completing the repair.

Control Module References on page 6-3 for battery charger, or hybrid/EV powertrain control module 2 replacement, programming and setup.

Plug-In Charging Malfunction (without CBT - GME Only)

Diagnostic Instructions

- Perform the *Diagnostic System Check - Vehicle on page 6-91* prior to using this diagnostic procedure.
- Review *Strategy Based Diagnosis on page 6-83* for an overview of the diagnostic approach.
- *Diagnostic Procedure Instructions on page 6-84* provides an overview of each diagnostic category.

Diagnostic Fault Information

Circuit	Short to Ground	Open/High Resistance	Short to Voltage	Signal Performance
Control Pilot Signal	P0CF4, P0CF5, P0CF6, P0CF9, P0D01, 1	P0CF4, P0CF5, P0CF6, 1	P0CF4, P0CF5, P0CF6, P0CF9,1	P0CF4, P0CF5, P0CF6, 1
Proximity Signal	P0D58, 1	P0D59, 1	P0D59, 1	—
110/120 A/C Line 1	1	P0D3F, P1EE6	1	—
110/120 A/C Line 2	1	P1EE6	1	—
110/120 A/C Ground	—	P0D59, 1	1	—
1. Plug In Charging Malfunction				

Circuit/System Description

The drive motor battery charger cable allows the vehicle to be charged using a common household power outlet. The drive motor battery charger cable contains LEDs that indicate the status of the drive motor battery charger cable. The drive motor battery charger cable automatically prohibits voltage transfer to the hybrid/EV battery charger receptacle and illuminates the indicator LEDs red if it senses internal faults or inadequate household voltage. If the drive motor battery charger cable senses no faults, voltage transfer to the hybrid/EV battery charger receptacle occurs and the indicator LEDs are illuminated green. Charging continues until Hybrid/EV Battery Pack State of Charge reaches 86% at which point the green indicator will flash slowly, indicating charging is complete.

Diagnostic Aids

The drive motor battery charger cable that displays flashing red status LEDs before plugging into the vehicle will need to be diagnosed first. The vehicle will not cause charging malfunction with flashing red status LEDs and the drive motor battery charger cable disconnected.

Reference Information

Schematic Reference

Plug-In Charging Schematics on page 9-553

Connector End View Reference

Component Connector End Views on page 11-455

Description and Operation

Plug-In Charging System Description and Operation on page 9-657

Electrical Information Reference

- *Circuit Testing on page 11-871*
- *Connector Repairs on page 11-895*
- *Testing for Intermittent Conditions and Poor Connections on page 11-877*
- *Wiring Repairs on page 11-883*

DTC Type Reference

Powertrain Diagnostic Trouble Code (DTC) Type Definitions on page 6-92

Scan Tool Reference

Control Module References on page 6-3 for scan tool information

Special Tools

- *EL-48900* HEV Safety Kit
- *EL-50794* High Voltage Disabling/Enabling Warning Signs

For equivalent regional tools, refer to *Special Tools on page 9-658*.

Circuit/System Verification

1. Vehicle in Service Mode, verify no additional DTCs are set in other control modules.

⇒ **If additional DTCs are set**

Refer to *Diagnostic Trouble Code (DTC) List - Vehicle on page 6-92*.

⇓ **If no additional DTCs are set**

2. Connect the drive motor battery charger cable to household power outlet, but not the battery charger receptacle.
3. After 25 seconds, verify drive motor battery charger cable LEDs illuminate solid green.

⇒ **If drive motor battery charger cable LEDs do not illuminate solid green**

3.1. Connect a known good drive motor battery charger cable to the same household power outlet.

⇒ If known good drive motor battery charger cable LEDs illuminate solid green, have the service provider check for high frequency noise on the dedicated home outlet. If no high frequency noise is found, replace drive motor battery charger cable.

⇒ If known good drive motor battery charger cable LEDs do not illuminate solid green, have the service provider inspect the household power outlet for insufficient voltage, high frequency noise, or open/high resistance.

⇓ **If drive motor battery charger cable LEDs do illuminate solid green**

4. Refer to Circuit/System Testing.

Circuit/System Testing

Danger: High voltage enabling and disabling shall be only performed by High Voltage Qualified Technicians. The procedures for high voltage enabling/disabling can be found in the service instructions and must be strictly followed at all times. The usage of the Protocol High Voltage Disabling / Enabling is mandatory. The High Voltage Qualified Technician is responsible for the adherence to the manufacturer's service instructions as well as current national legal regulations.

Failure to follow the procedures exactly as written may result in serious injury or death.

Questions regarding training can be answered by your national training centre.

Danger: Any hybrid/EV battery pack replacement shall be performed by High Voltage Qualified Technicians only. The replacement procedure can be found in the service instruction and must be strictly followed at all times. The High Voltage Qualified Technician is responsible for adherence to the manufacturer's service instructions as well as current national legal regulations. If the hybrid/EV battery pack needs to be replaced contact the Technical Assistance Centre for further instructions prior removal of the battery pack.

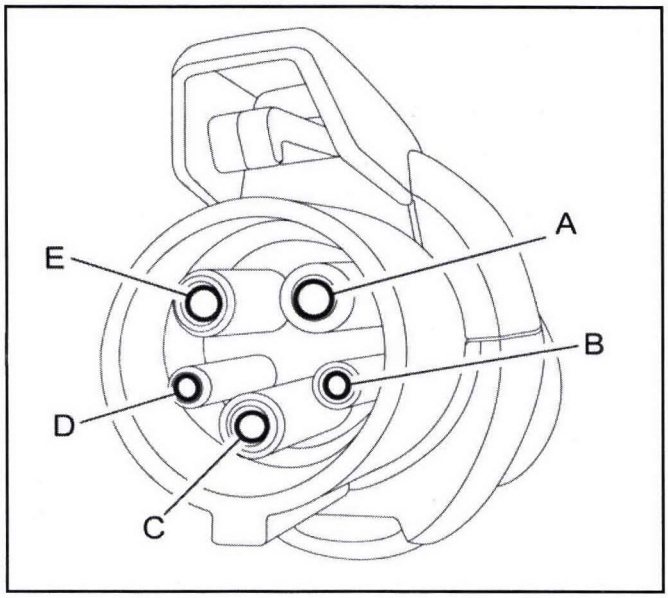

3631526

1. Test for B+ between the low voltage circuits listed below on drive motor battery charger cable.
   - Control pilot signal circuit terminal B
   - Proximity status signal circuit terminal D

⇒ **If not B+**

Replace drive motor battery charger cable.

⇓ **If B+**

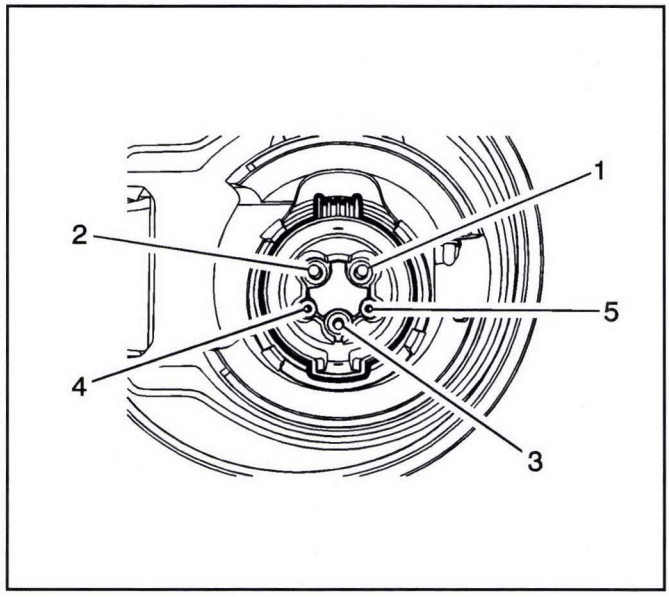

3549493

Note: The following tests are performed at the X98 Hybrid/EV Battery Charger Receptacle and not at the harness connector to the X98 Hybrid/EV Battery Charger Receptacle.

2. Vehicle OFF and all vehicle systems OFF. It may take up to 2 minutes for all vehicle systems to power down. Test for 100k Ω–4M Ω between the control pilot signal terminal 4 at the X98 Hybrid/EV Battery Charger Receptacle and ground.

⇒ **If 4M Ω greater**

2.1. Disconnect the X2 harness connector from K114B Hybrid/EV Powertrain Control Module 2

2.2. Test for 2 Ω in the control pilot signal circuit end to end.

⇒ If 2 Ω or greater, repair the open/high resistance in the circuit.

⇒ If less than 2 Ω, replace the K114B Hybrid/EV Powertrain Control Module 2.

⇒ **If less than 100k Ω**

2.1. Disconnect the X2 harness connector from K114B Hybrid/EV Powertrain Control Module 2

2.2. Test for infinite resistance between the control pilot signal circuit and ground.

⇒ If less than infinite resistance, repair the short to ground in the circuit.

⇒ If infinite resistance, replace the K114B Hybrid/EV Powertrain Control Module 2.

⇓ **If within the specified range**

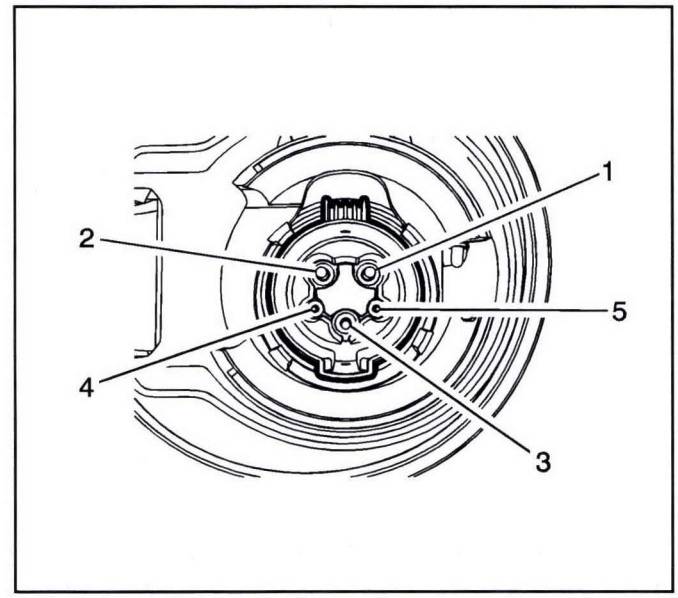

3549493

3. Test for less than 10 Ω between the 110/220 V A/C Ground terminal 3 at the X98 Hybrid/EV Battery Charger Receptacle and ground.

⇒ **If 10 Ω or greater**

Repair the open/high resistance in the circuit.

⇓ **If less than 10 Ω**

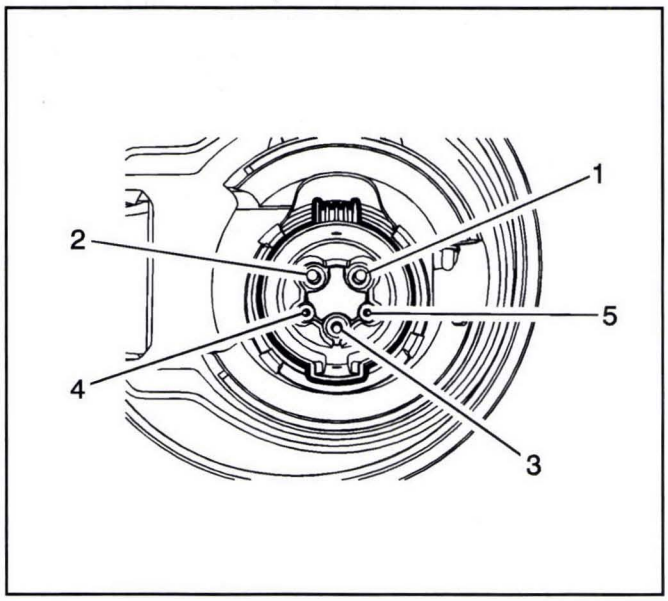

3549493

4. Vehicle in Service Mode.
5. Test for less than 1 V between the control pilot signal terminal 4 at the X98 Hybrid/EV Battery Charger Receptacle and ground.

⇒ **If 1 V or greater**

5.1. Vehicle OFF, disconnect the X2 harness connector from K114B Hybrid/EV Powertrain Control Module 2. Vehicle in Service Mode.

5.2. Test for less than 1 V between the control pilot signal circuit and ground.

⇒ If greater than 1 V, repair the short to voltage in the circuit.

⇒ If less than 1 V, replace the K114B Hybrid/EV Powertrain Control Module 2.

⇓ **If less than 1 V**

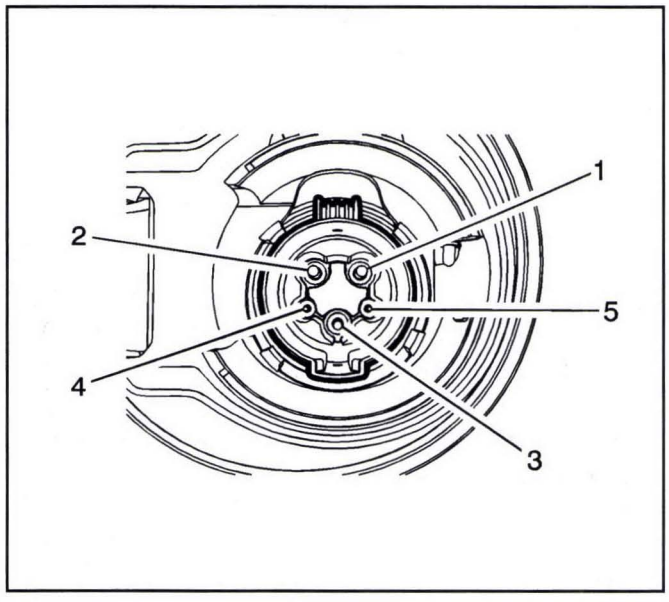

3549493

6. Test for 4.2–4.8 V between the proximity status signal terminal 5 at the X98 Hybrid/EV Battery Charger Receptacle and ground.

⇒ **If less than 4.2 V**

6.1. Vehicle OFF.

6.2. Test for infinite resistance between the proximity status signal circuit and ground.

⇒ If less than infinite resistance, repair the short to ground on the circuit.

⇓ If infinite resistance

6.3. Disconnect the X2 harness connector from K114B Hybrid/EV Powertrain Control Module 2.

6.4. Test for less than 2 Ω in the proximity status signal circuit end to end.

⇒ If 2 Ω or greater, repair the open/high resistance in the circuit.

⇒ If less than 2 Ω, replace the K114B Hybrid/EV Powertrain Control Module 2.

⇒ **If 4.8 V or greater**

6.1. Vehicle OFF, disconnect the X2 harness connector from K114B Hybrid/EV Powertrain Control Module 2. Vehicle in Service Mode.

6.2. Test for 0 V between the proximity status signal circuit and ground.

⇒ If greater than 0 V, repair the short to voltage in the circuit.

⇒ If 0 V, replace the K114B Hybrid/EV Powertrain Control Module 2.

⇓ **If within the specified range**

7. Vehicle OFF, disconnect the X3 harness connector from T18 Battery Charger.

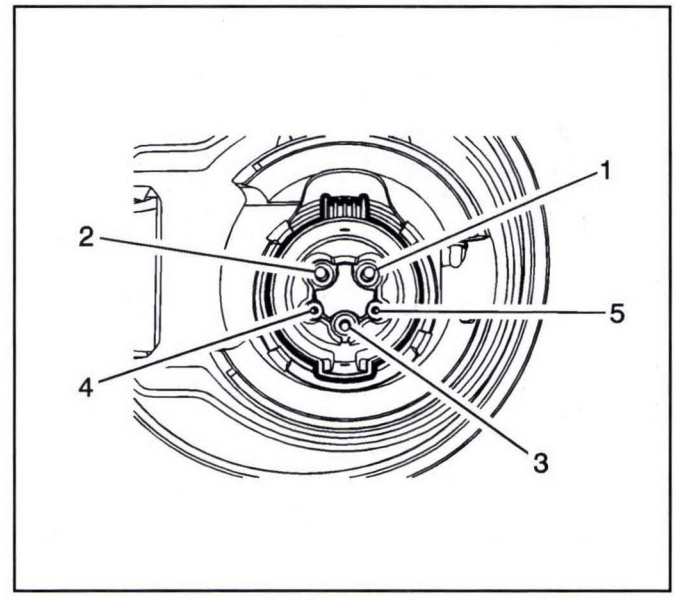

3549493

Note: The following tests are performed at the X98 Hybrid/EV Battery Charger Receptacle and not at the harness connector to the X98 Hybrid/EV Battery Charger Receptacle.

8. Test for infinite resistance between the terminals listed below at the X98 Hybrid/EV Battery Charger Receptacle;
   - 110/220 V A/C Line 1 terminal 1 and 110/220 V A/C Neutral Line 2 terminal 2
   - 110/220 V A/C Line 1 terminal 1 and 110/220 V A/C Ground terminal 3
   - 110/220 V A/C Line 1 terminal 1 and Control pilot signal circuit terminal 4
   - 110/220 V A/C Line 1 terminal 1 and Proximity status signal circuit terminal 5
   - 110/220 V A/C Neutral Line 2 terminal 2 and 110/220 V A/C Ground terminal 3
   - 110/220 V A/C Neutral Line 2 terminal 2 and Control pilot signal circuit terminal 4
   - 110/220 V A/C Neutral Line 2 terminal 2 and Proximity status signal circuit terminal 5
   - 110/220 V A/C Ground terminal 3 and Control pilot signal circuit terminal 4
   - 110/220 V A/C Ground terminal 3 and Proximity status signal circuit terminal 5
   - Control pilot signal circuit terminal 4 and Proximity status signal circuit terminal 5

⇒ **If less than infinite resistance**

Repair the short between the circuits.

⇓ **If infinite resistance**

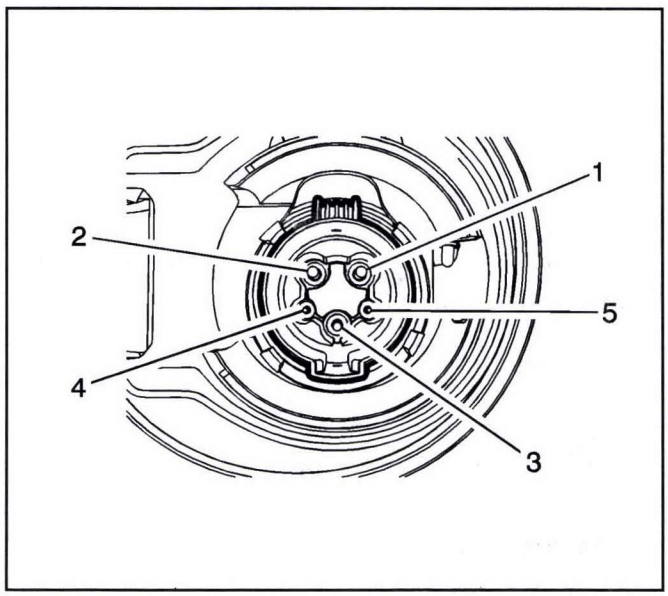

3549493

Note: The following tests are performed at the X98 Hybrid/EV Battery Charger Receptacle and not at the harness connector to the X98 Hybrid/EV Battery Charger Receptacle.

9. Test for less than 10 Ω between the terminals listed below;
   - 110/220 V A/C Line 1 terminal 1 at the X98 Hybrid/EV Battery Charger Receptacle and terminal 3 X3
   - 110/220 V A/C Neutral Line 2 terminal 2 at the X98 Hybrid/EV Battery Charger Receptacle and terminal 2 X3

⇒ **If 10 Ω or greater**

Repair the open/high resistance in the circuit.

⇓ **If less than 10 Ω**

⇓ **If infinite resistance**

10. Disconnect the harness connector from the X98 Hybrid/EV Battery Charger Receptacle.

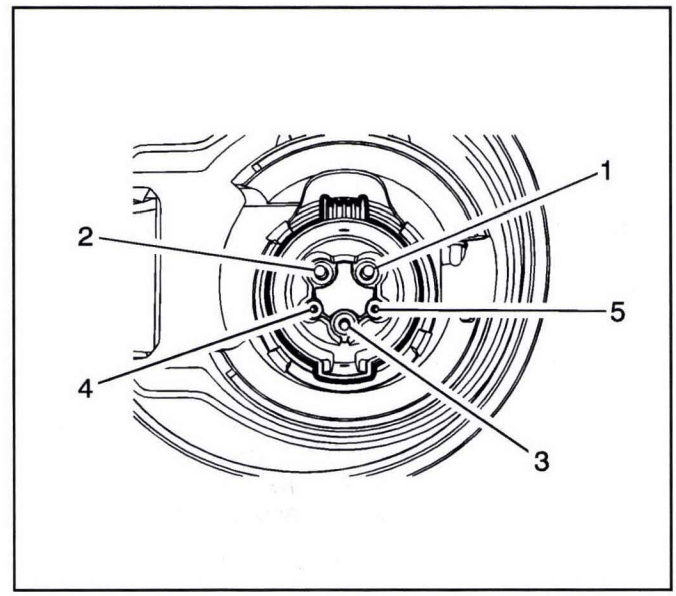

3549493

11. Test for 2.56–2.84k Ω between the 110/220 V A/C Ground terminal 3 and Proximity status signal circuit terminal 5 at the X98 Hybrid/EV Battery Charger Receptacle.

⇒ **If not within the specified range**

Replace the X98 Hybrid/EV Battery Charger Receptacle.

⇓ **If within the specified range**

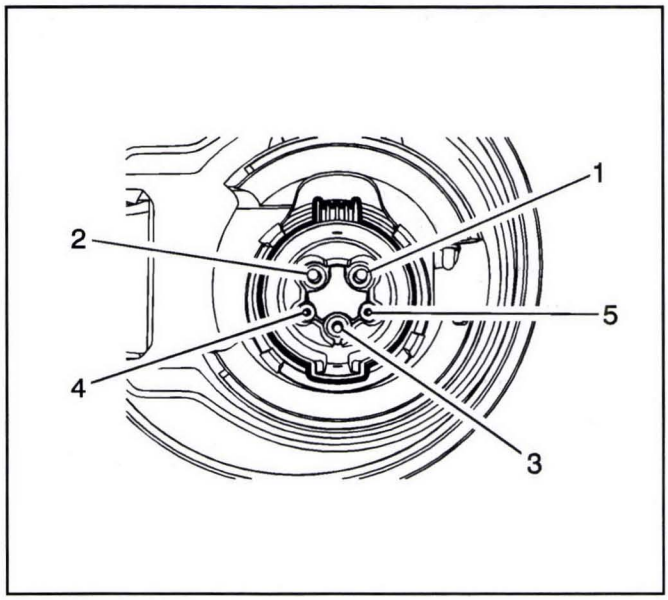

3549493

Note: This test is performed on the vehicle side of the harness connector.

12. Test for infinite resistance between the Proximity status signal circuit terminal 5 of the harness connector and ground.

⇒ **If less than infinite resistance**

Repair short to ground on the circuit.

⇓ **If infinite resistance**

13. Replace the T18 Battery Charger.

Repair Instructions

Perform the *Diagnostic Repair Verification on page 6-123* after completing the repair.

Control Module References on page 6-3 for battery charger, or hybrid/EV powertrain control module 2 replacement, programming and setup.

Plug-In Charging Indicator Malfunction

Diagnostic Instructions

- Perform the *Diagnostic System Check - Vehicle on page 6-91* prior to using this diagnostic procedure.
- Review *Strategy Based Diagnosis on page 6-83* for an overview of the diagnostic approach.
- *Diagnostic Procedure Instructions on page 6-84* provides an overview of each diagnostic category.

Diagnostic Fault Information

Circuit	Short to Ground	Open/High Resistance	Short to Voltage	Signal Performance
Charge Pilot Indicator Control	P0D2B	P0D2B	P0D2B	—
Charge Status Indicator Control	P0D2C	P0D2C, 1	P0D2C	—
Charge Complete Indicator Control	1	1	1	—
Low Reference	—	P0D2C, P0D2B	—	—
1. Plug In Charging Indicator Malfunction				

Circuit/System Description

The status of charging events (including delays) is communicated to the user through a charge status indicator and audio tones . The vehicle charge status indicator, located on the top middle of the instrument panel, contains a green LED (charge status indicator) and yellow LED (charge pilot indicator) controlled by the Hybrid Powertrain Control Module 2 and a second green LED (charge complete indicator) controlled by the BCM. The indicator will be illuminated solid green when the vehicle is charging under automatic control. It will have a fast flash green if the charging is delayed and will begin later. It will have a slow flash green when charging is complete. A solid lit yellow indicator means the vehicle is not able to accept a charge. And if there is no indicator lit it means the electronic vehicle supply equipment is not working properly or connected.

Reference Information

Schematic Reference

Plug-In Charging Schematics on page 9-553

Connector End View Reference

Component Connector End Views on page 11-455

Description and Operation

Plug-In Charging System Description and Operation on page 9-657

Electrical Information Reference

- *Circuit Testing on page 11-871*
- *Connector Repairs on page 11-895*

- *Testing for Intermittent Conditions and Poor Connections on page 11-877*
- *Wiring Repairs on page 11-883*

DTC Type Reference

Powertrain Diagnostic Trouble Code (DTC) Type Definitions on page 6-92

Scan Tool Reference

Control Module References on page 6-3 for scan tool information

Circuit/System Testing

1. Vehicle OFF and all vehicle systems OFF. It may take up to 2 minutes for all vehicle systems to power down. Disconnect the harness connector at the P36 battery state of charge indicator.
2. Test for less than 10 Ω between the low reference terminal C and ground.

⇒ **If 10 Ω or greater**

Repair the open/high resistance in the circuit.

2.1. Disconnect the X2 harness connector from K114B Hybrid/EV Powertrain Control Module 2

2.2. Test for 2 Ω in the low reference circuit end to end.

⇒ If 2 Ω or greater, repair the open/high resistance in the circuit.

⇒ If less than 2 Ω, replace the K114B Hybrid/EV Powertrain Control Module 2.

⇓ **If less than 10 Ω**

Note: If the drive motor battery charger cable is connected. The drive motor battery charger cable must be disconnected for more than 10 seconds before performing the next step.

3. Connect a test lamp between the signal terminal A and ground.
4. Verify the test lamp does not illuminate.

⇒ **If the test lamp does illuminate**

4.1. Disconnect the X2 harness connector at the K114B Hybrid/EV Powertrain Control Module 2.

4.2. Test for less than 1 V between the signal circuit terminal and ground.

⇒ If 1 V or greater, repair the short to voltage in the circuit.

⇒ If less than 1 V, replace the K114B Hybrid/EV Powertrain Control Module 2.

⇓ **If the test lamp does not illuminate**

5. Connect the drive motor battery charger cable.
6. Verify that the test lamp illuminates in the first 5 seconds of connecting the drive motor battery charger cable.

⇒ **If the test lamp does not illuminate**

6.1. Disconnect the X2 harness connector at the K114B Hybrid/EV Powertrain Control Module 2.

6.2. Test for infinite resistance between the signal circuit and ground

⇒ If less than infinite resistance, repair the short to ground on the circuit.

⇓ If infinite resistance

6.3. Test for less than 2 Ω the signal circuit end to end.

⇒ If 2 Ω or greater, repair the open/high resistance in the circuit.

⇒ If less than 2 Ω, replace the K114B Hybrid/EV Powertrain Control Module 2.

⇓ **If the test lamp does illuminate**

7. Disconnect the drive motor battery charger cable for at least 10 seconds. Connect a test lamp between the signal terminal B and ground.
8. Verify the test lamp does not illuminate.

⇒ **If the test lamp does illuminate**

8.1. Disconnect the X2 harness connector at the K114B Hybrid/EV Powertrain Control Module 2.

8.2. Test for less than 1 V between the signal circuit terminal and ground.

⇒ If 1 V or greater, repair the short to voltage in the circuit.

⇒ If less than 1 V, replace the K114B Hybrid/EV Powertrain Control Module 2.

⇓ **If the test lamp does not illuminate**

9. Connect the drive motor battery charger cable.
10. Verify that the test lamp illuminates within 25 seconds of connecting the drive motor battery charger cable.

⇒ **If the test lamp does not illuminate**

10.1. Disconnect the X2 harness connector at the K114B Hybrid/EV Powertrain Control Module 2.

10.2. Test for infinite resistance between the signal circuit and ground

⇒ If less than infinite resistance, repair the short to ground on the circuit.

⇓ If infinite resistance

10.3. Test for less than 2 Ω the signal circuit end to end.

⇒ If 2 Ω or greater, repair the open/high resistance in the circuit.

⇒ If less than 2 Ω, replace the K114B Hybrid/EV Powertrain Control Module 2.

⇓ **If the test lamp does illuminate**

11. Connect a test lamp between the signal terminal D and ground. Vehicle in Service Mode.

12. Command the BCM Charge Complete Indicator ON and OFF with a scan tool. The test lamp should turn ON and OFF when changing between the commanded states.

⇒ **If the test lamp is always ON**

12.1. Vehicle OFF, disconnect the X1 harness connector at the K9 Body Control Module.

12.2. Test for less than 1 V between the control circuit terminal and ground.

⇒ If 1 V or greater, repair the short to voltage in the circuit.

⇒ If less than 1 V, replace the K9 Body Control Module.

⇒ **If the test lamp is always OFF**

12.1. Vehicle OFF, disconnect the X1 harness connector at the K9 Body Control Module.

12.2. Test for infinite resistance between the control circuit and ground.

⇒ If less than infinite resistance, repair the short to ground on the circuit.

⇓ If infinite resistance

12.3. Test for less than 2 Ω the control circuit end to end.

⇒ If 2 Ω or greater, repair the open/high resistance in the circuit.

⇒ If less than 2 Ω, replace the K9 Body Control Module.

⇓ **The test lamp turns ON and OFF**

13. Replace the P36 Battery State Of Charge Indicator.

Repair Instructions

Perform the *Diagnostic Repair Verification on page 6-123* after completing the repair.

- *Battery Charge Indicator Replacement on page 8-97*
- *Control Module References on page 6-3* for body control module, hybrid/EV powertrain control module 2 replacement, programming and setup.

Repair Instructions

Charge Port Door Replacement

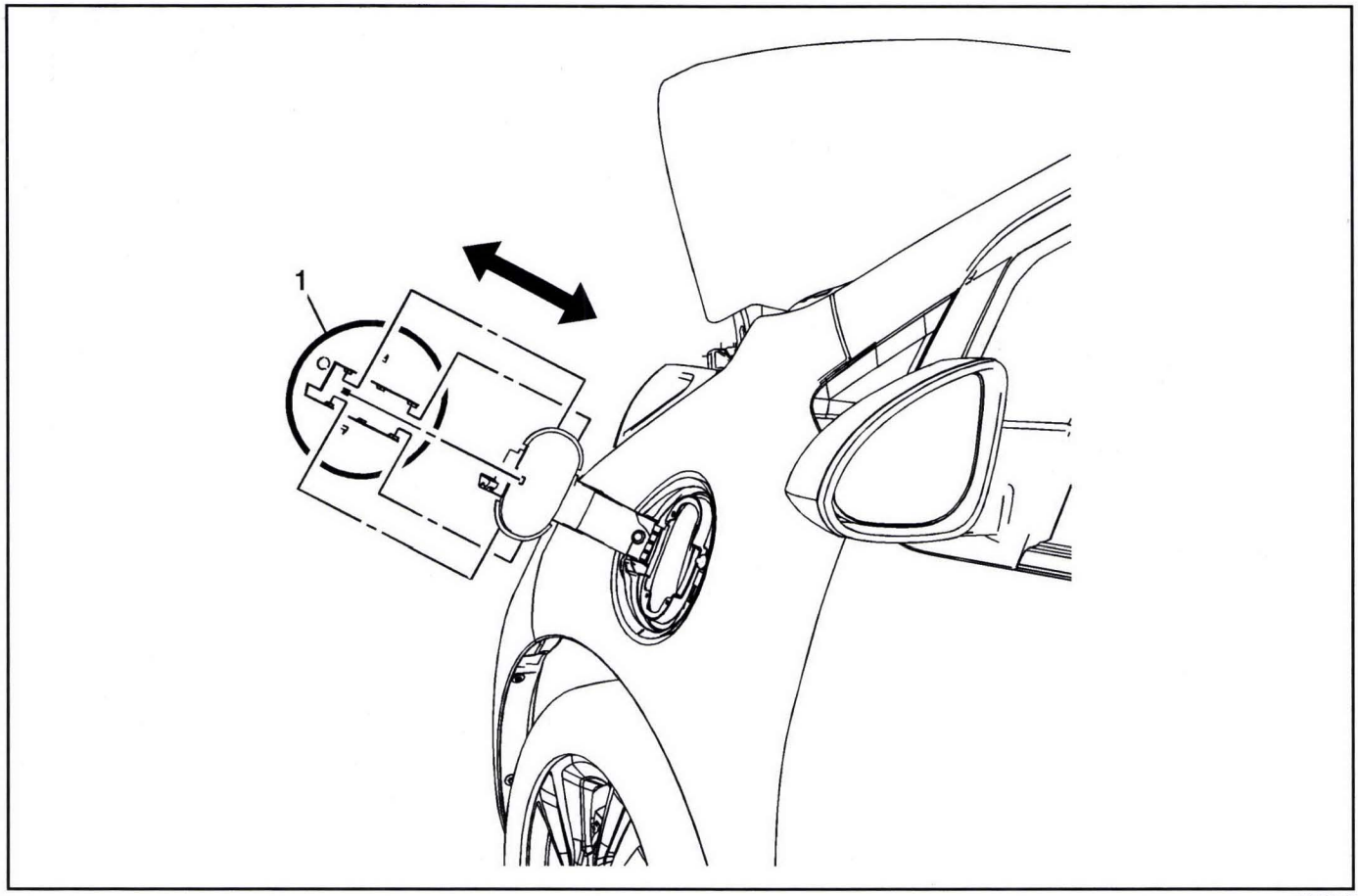

2916680

Charge Port Door Replacement

Callout	Component Name
Preliminary Procedures 1. Electrically release (if equiped) and open the charge port door . 2. Disable the high voltage system. Refer to *High Voltage Disabling on page 9-363*.	
1	Charge Port Door **Procedure** 1. Using a flat-bladed driver, lift slightly upward on the tab at the center of the hinge in order to release the door from the hinge assembly. 2. Slide the door outward, away from the hinge and remove. 3. Enable the high voltage system. Refer to *High Voltage Enabling on page 9-367*.

Charge Port Housing Replacement

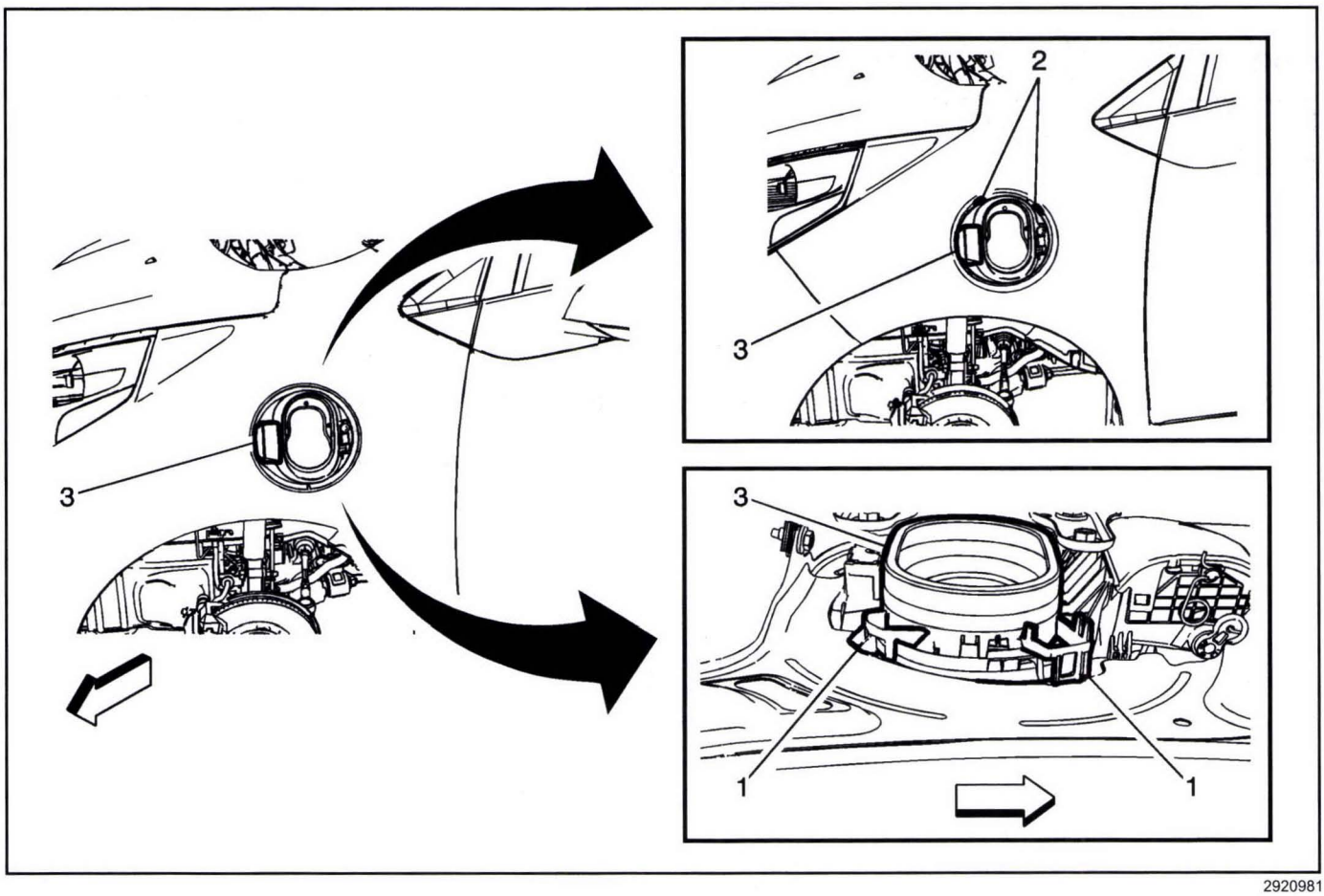

2920981

Charge Port Housing Replacement

Callout	Component Name
Danger: Always perform the High Voltage Disabling procedure prior to servicing any High Voltage component or connection. Personal Protection Equipment (PPE) and proper procedures must be followed. ***The High Voltage Disabling procedure includes the following steps:*** • ***Identify how to disable high voltage.*** • ***Identify how to test for the presence of high voltage.*** • ***Identify condition under which high voltage is always present and personal protection equipment (PPE) and proper procedures must be followed.*** ***Before working on any high voltage system, be sure to wear the following Personal Protection Equipment:*** • ***Safety glasses with appropriate side shields when within 15 meters (50 feet) of the vehicle, either indoors or outdoors.*** • ***Certified and up-to-date Class "0" Insulation gloves rated at 1000V with leather protectors.*** – ***Visually and functionally inspect the gloves before use.*** – ***Wear the Insulation gloves with leather protectors at all times when working with the high voltage battery assembly, whether the system is energized or not.*** ***Failure to follow the procedures may result in serious injury or death.*** **Preliminary Procedures** 1. Disable the high voltage system. Refer to *High Voltage Disabling on page 9-363*. 2. Remove the left front wheelhouse liner. Refer to *Front Wheelhouse Liner Replacement - Left Side on page 3-139*. 3. Disconnect the electrical connector for the charge port door ajar indicator switch assembly. 4. Remove the charge port door. Refer to *Charge Port Door Replacement on page 9-647*.	
1	Charge Port Lower Housing Retainer **Procedure** From inside the fender, release the lower retainer of the charge port housing.

Charge Port Housing Replacement (cont'd)

Callout	Component Name
2	Charge Port Upper Housing Retainer **Procedure** Using a flat-bladed tool that fits into the 2 depressions, break through the 2 depressions with light pressure and then pry the retainer free to release the charge port housing from the fender.
3	Charge Port Housing Assembly **Procedure** 1. Push outward on the assembly housing. 2. Remove the charge port housing assembly along with the electrical harness for the charge port door ajar indicator switch assembly. 3. Enable the high voltage system. Refer to *High Voltage Enabling on page 9-367*.

Drive Motor Battery Charger Replacement

Removal Procedure

Danger: Always perform the High Voltage Disabling procedure prior to servicing any High Voltage component or connection. Personal Protection Equipment (PPE) and proper procedures must be followed.

The High Voltage Disabling procedure includes the following steps:

- ***Identify how to disable high voltage.***
- ***Identify how to test for the presence of high voltage.***
- ***Identify condition under which high voltage is always present and personal protection equipment (PPE) and proper procedures must be followed.***

Before working on any high voltage system, be sure to wear the following Personal Protection Equipment:

- ***Safety glasses with appropriate side shields when within 15 meters (50 feet) of the vehicle, either indoors or outdoors.***
- ***Certified and up-to-date Class "0" Insulation gloves rated at 1000V with leather protectors.***
  - ***Visually and functionally inspect the gloves before use.***
  - ***Wear the Insulation gloves with leather protectors at all times when working with the high voltage battery assembly, whether the system is energized or not.***

Failure to follow the procedures may result in serious injury or death.

1. Disable the high voltage system. Refer to *High Voltage Disabling on page 9-363*.
2. Remove the front compartment sight shield. Refer to *Front Compartment Front Sight Shield Replacement on page 3-39*.
3. Remove the engine control module (ECM) bracket. Refer to *Engine Control Module Bracket Replacement on page 9-172*.
4. Remove the battery tray. Refer to *Battery Tray Replacement on page 9-30*.
5. Remove the heater coolant heater. Refer to *Heater Coolant Heater Replacement on page 10-74*.

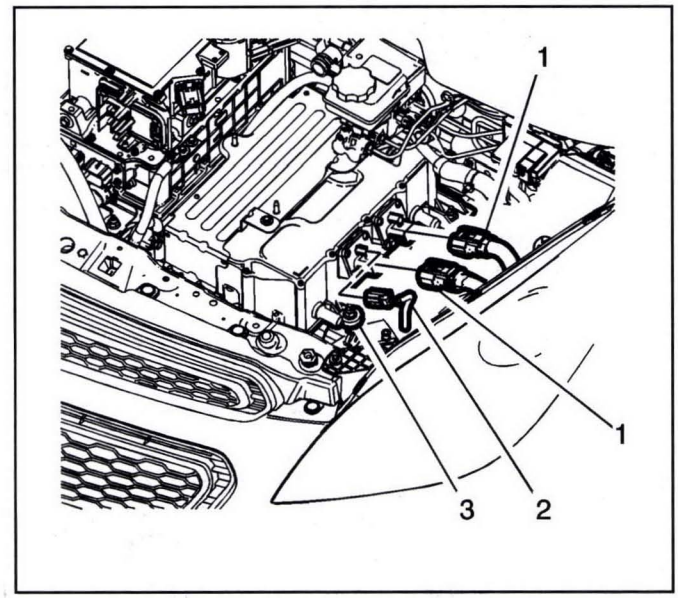

3232221

6. Disconnect the connectors (1), (2) from the left side of the drive motor battery charger.

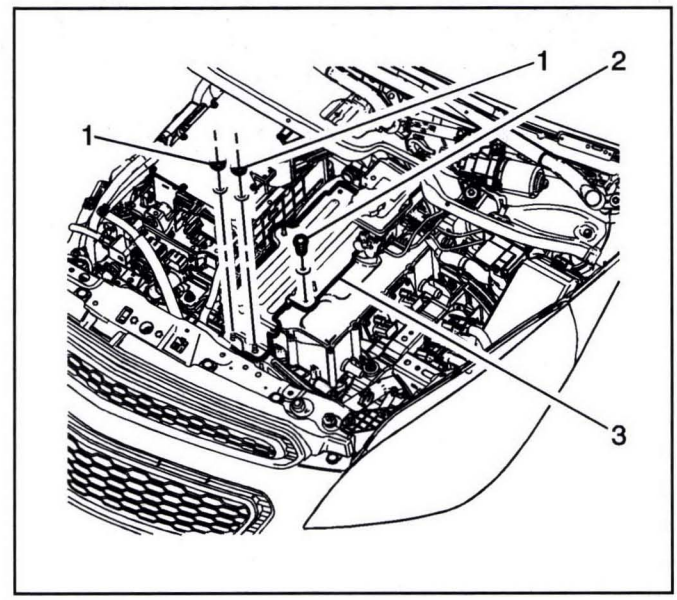

3232219

7. Remove the heater coolant heater bracket fasteners (1,2).

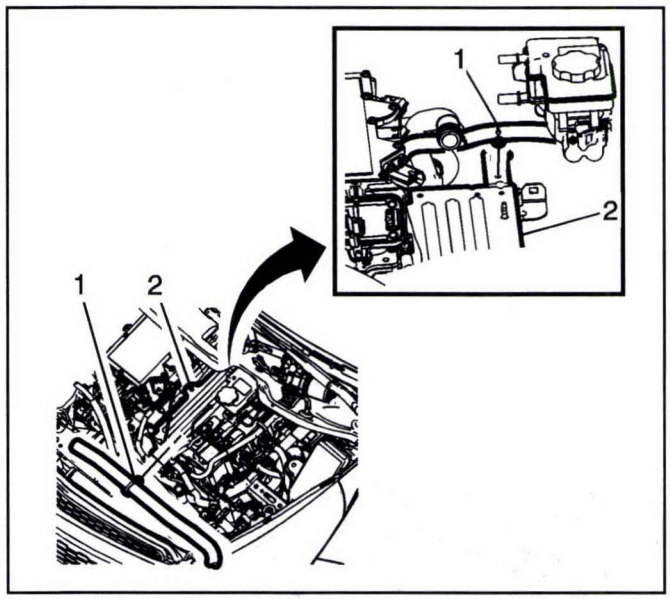

3232218

8. Remove the drive motor battery coolant inlet hose retainer (1) and the battery positive cable retainer (1), from the heater coolant heater bracket (2).
9. Remove the coolant heater coolant bracket (2) from the vehicle.

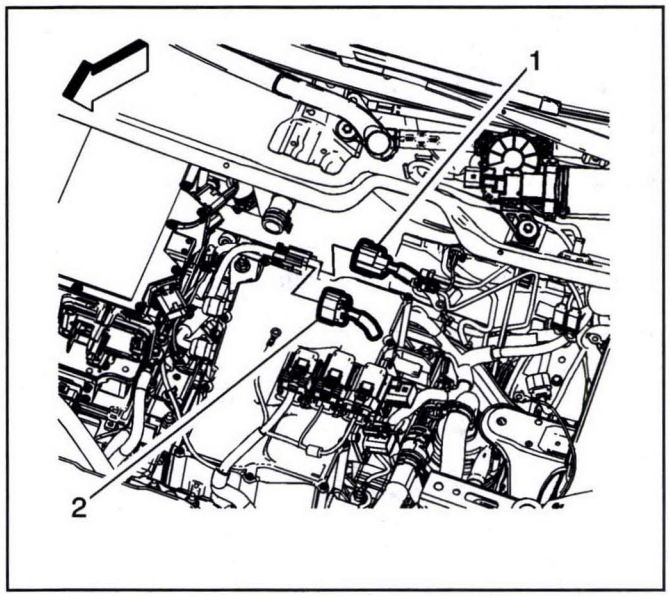

3232217

10. Disconnect the engine wiring harness upper connector (2) and the lower connector (1), from the pigtail connection off the right side of the drive motor battery charger.
11. Disconnect the drive motor generator control module cooling outlet hoses (Auxiliary Radiator to Drive Motor Battery Charger) to the drive motor battery charger. Refer to *Drive Motor Generator Control Module Cooling Outlet Hose Replacement (Auxiliary Radiator to Drive Motor Battery Charger) on page 9-292* or *Drive Motor Generator Control Module Cooling Outlet Hose Replacement (Long Hose) on page 9-293* or *Drive Motor Generator Control Module Cooling Outlet Hose Replacement (Two Bending) on page 9-294* or *Drive Motor Generator Control Module Cooling Outlet Hose Replacement (Straight Hose) on page 9-296*.
12. Disconnect the drive motor generator control module cooling outlet hoses (Two Bending) to the drive motor battery charger. Refer to *Drive Motor Generator Control Module Cooling Outlet Hose Replacement (Auxiliary Radiator to Drive Motor Battery Charger) on page 9-292* or *Drive Motor Generator Control Module Cooling Outlet Hose Replacement (Long Hose) on page 9-293* or *Drive Motor Generator Control Module Cooling Outlet Hose Replacement (Two Bending) on page 9-294* or *Drive Motor Generator Control Module Cooling Outlet Hose Replacement (Straight Hose) on page 9-296*.

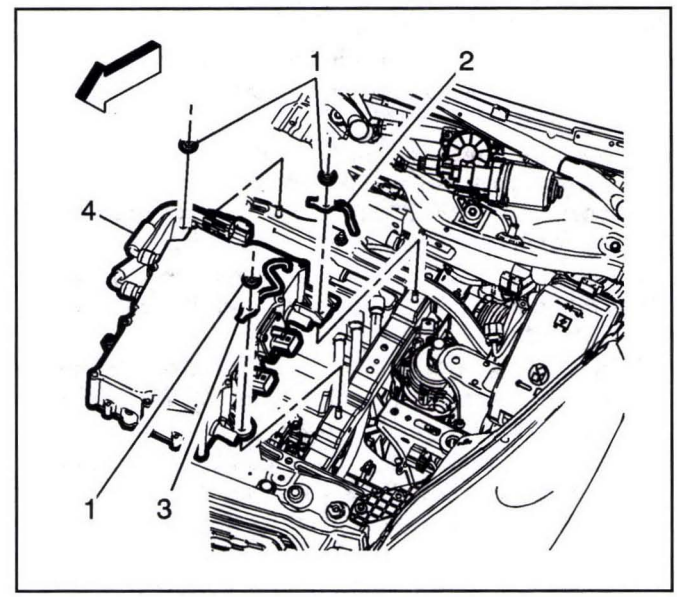

3232213

13. Remove the drive motor battery charger mounting fasteners (1) and remove the engine wiring harness terminals (2,3).
14. Remove the drive motor battery charger (4), from the vehicle.

Installation Procedure

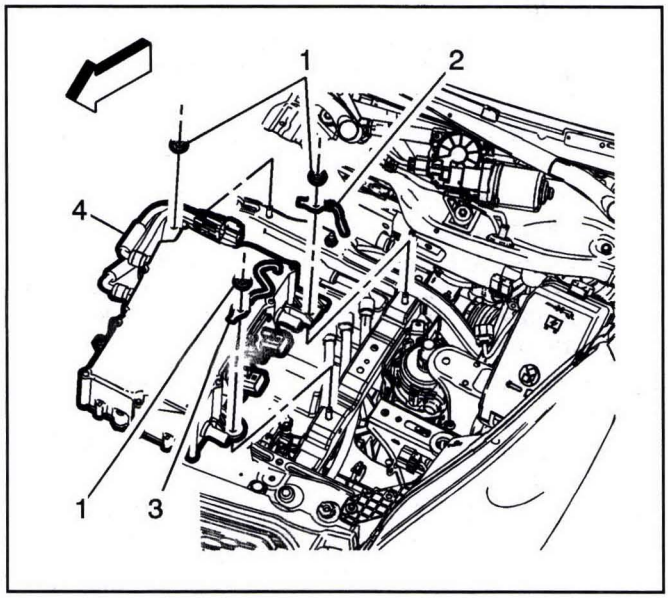

3232213

1. Install the drive motor battery charger (4) into position on the mounting studs.

Caution: Refer to *Fastener Caution on page 0-8*.

2. Install the engine wiring harness terminals (2,3) onto the mounting studs.
3. Install the drive motor battery charger mounting fasteners (1). Tighten to **22 N•m (16 lb ft)**.

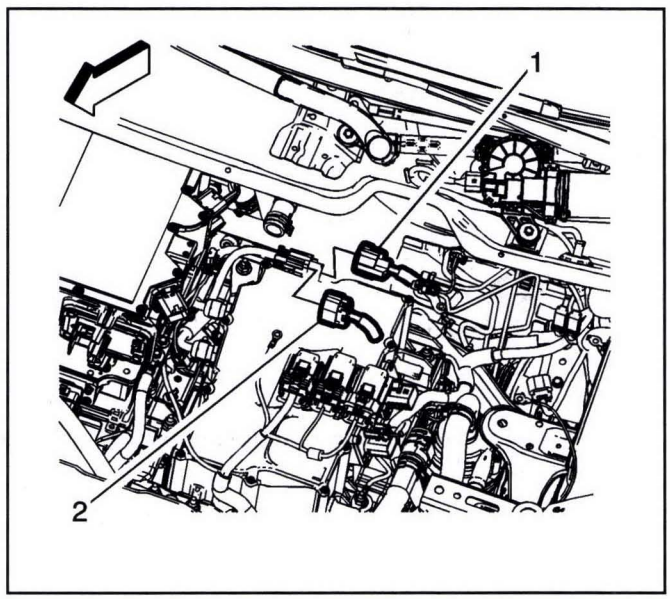

3232217

4. Connect the engine wiring harness lower connector (1) and upper connector (2), to the pigtail connection off the right side of the drive motor battery charger.
5. Install the drive motor generator control module cooling outlet hoses (Two Bending) to the drive motor battery charger. Refer to *Drive Motor Generator Control Module Cooling Outlet Hose Replacement (Auxiliary Radiator to Drive Motor Battery Charger) on page 9-292* or *Drive Motor Generator Control Module Cooling Outlet Hose Replacement (Long Hose) on page 9-293* or *Drive Motor Generator Control Module Cooling Outlet Hose Replacement (Two Bending) on page 9-294* or *Drive Motor Generator Control Module Cooling Outlet Hose Replacement (Straight Hose) on page 9-296*.
6. Install the drive motor generator control module cooling outlet hoses (Auxiliary Radiator to Drive Motor Battery Charger) to the drive motor battery charger. Refer to *Drive Motor Generator Control Module Cooling Outlet Hose Replacement (Auxiliary Radiator to Drive Motor Battery Charger) on page 9-292* or *Drive Motor Generator Control Module Cooling Outlet Hose Replacement (Long Hose) on page 9-293* or *Drive Motor Generator Control Module Cooling Outlet Hose Replacement (Two Bending) on page 9-294* or *Drive Motor Generator Control Module Cooling Outlet Hose Replacement (Straight Hose) on page 9-296*.

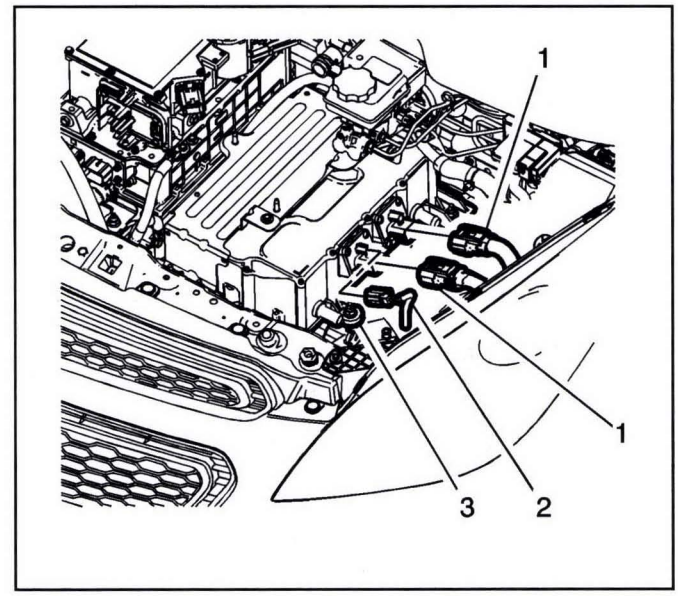

3232221

7. Connect the connectors (1), (2) to the left side of the drive motor battery charger.

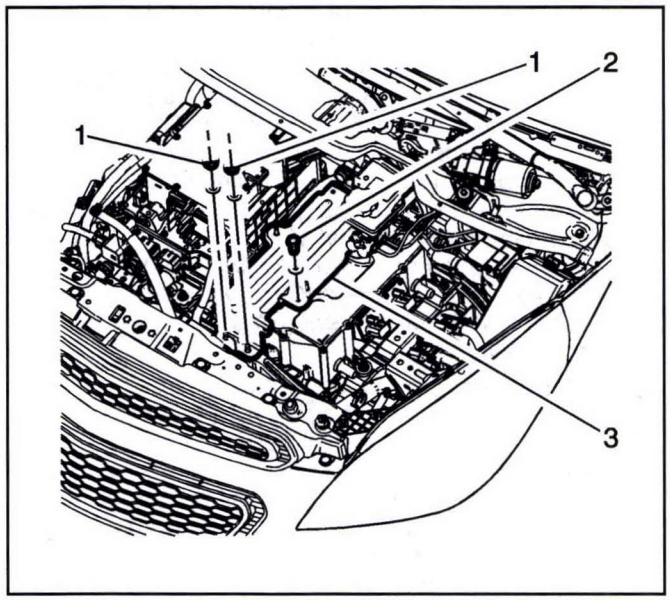

3232219

8. Install the heater coolant heater bracket (3) to the top of the drive motor battery charger with the fasteners (1,2). Tighten to **22 N•m (16 lb ft)**.
9. Install the heater coolant heater. Refer to *Heater Coolant Heater Replacement on page 10-74*.
10. Install the engine control module (ECM) and bracket. Refer to *Engine Control Module Bracket Replacement on page 9-172*.
11. Install the battery tray and battery. Refer to *Battery Tray Replacement on page 9-30*.
12. Install the high voltage disconnect circuit connector cover. Refer to *High Voltage Disconnect Circuit Connector Cover Replacement on page 9-174*.
13. Install the front compartment sight shield. Refer to *Front Compartment Front Sight Shield Replacement on page 3-39*.
14. Enable the high voltage system. Refer to *High Voltage Enabling on page 9-367*.
15. Program the drive motor battery charger. Refer to *Control Module References on page 6-3*.

Drive Motor Battery Charger Receptacle Replacement (Without quick charge)

Removal Procedure

Danger: Always perform the High Voltage Disabling procedure prior to servicing any High Voltage component or connection. Personal Protection Equipment (PPE) and proper procedures must be followed.

The High Voltage Disabling procedure includes the following steps:

- ***Identify how to disable high voltage.***
- ***Identify how to test for the presence of high voltage.***
- ***Identify condition under which high voltage is always present and personal protection equipment (PPE) and proper procedures must be followed.***

Before working on any high voltage system, be sure to wear the following Personal Protection Equipment:

- ***Safety glasses with appropriate side shields when within 15 meters (50 feet) of the vehicle, either indoors or outdoors.***
- ***Certified and up-to-date Class "0" Insulation gloves rated at 1000V with leather protectors.***
  - ***Visually and functionally inspect the gloves before use.***
  - ***Wear the Insulation gloves with leather protectors at all times when working with the high voltage battery assembly, whether the system is energized or not.***

Failure to follow the procedures may result in serious injury or death.

1. Disable the high voltage system. Refer to *High Voltage Disabling on page 9-363*.
2. Remove the high voltage disconnect circuit cover. Refer to *High Voltage Disconnect Circuit Connector Cover Replacement on page 9-174*.
3. Remove the charge port housing. Refer to *Charge Port Housing Replacement on page 9-648*.

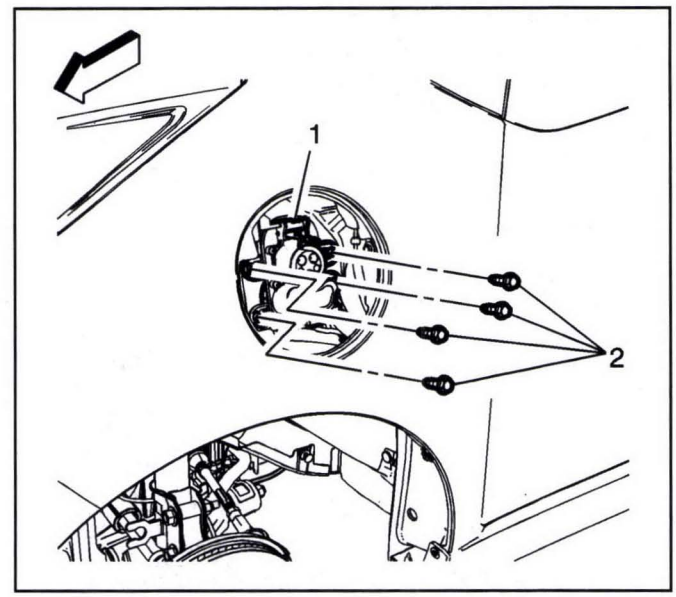

3242933

4. Remove the drive motor battery charger receptacle fasteners (1).

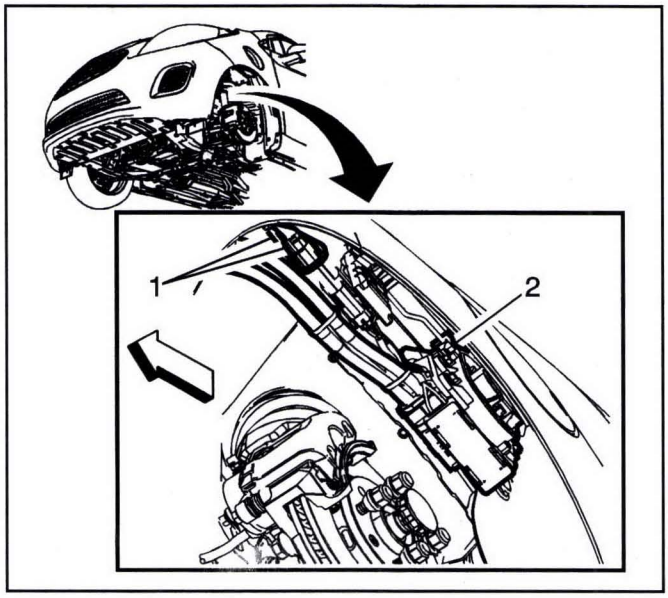

3242914

5. Disconnect the connectors (1) to the drive motor battery charger receptacle (2).

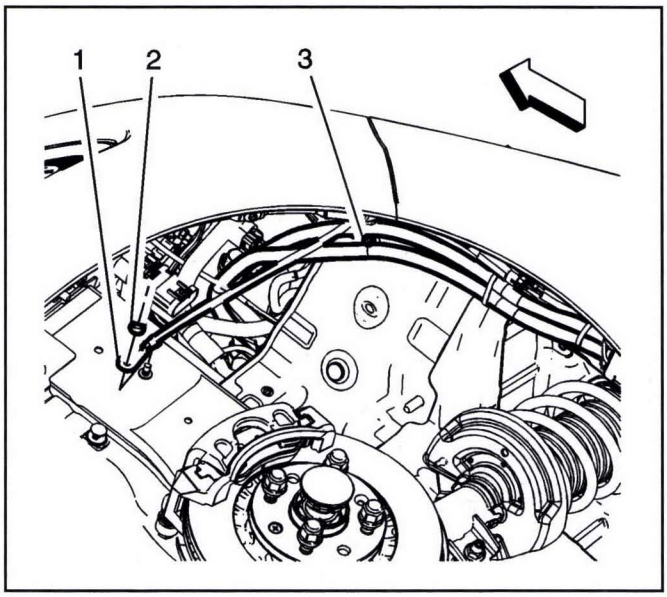

3242916

6. Remove the ground fastener (2) and detach the drive motor battery charger receptacle harness terminal (1), from the frame stud.
7. Detach the harness retainer (3) from the wheel well panel.
8. Remove the drive motor battery charger from the vehicle.

Installation Procedure

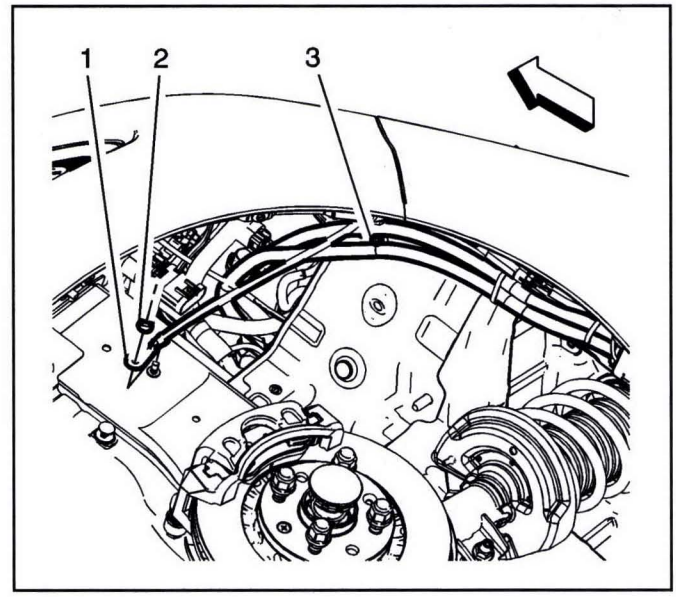

3242916

Caution: Refer to *Fastener Caution on page 0-8*.

1. Install the drive motor battery charger receptacle ground harness terminal (1), to the frame rail stud. Tighten the fastener (2) to **9 N•m (80 lb in)**.
2. Connect the drive motor battery charger receptacle harness retainer (3), to the wheel well panel.

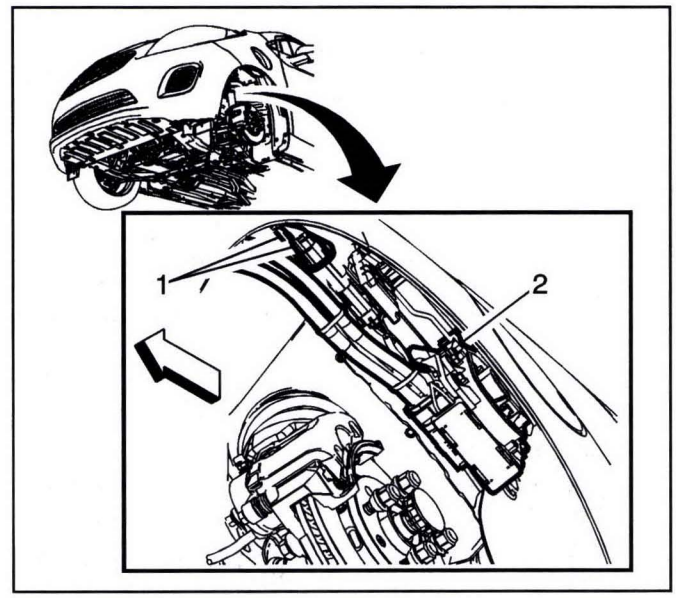

3242914

3. Slide the drive motor battery charger receptacle (2) into position and connect the harness connectors (1).

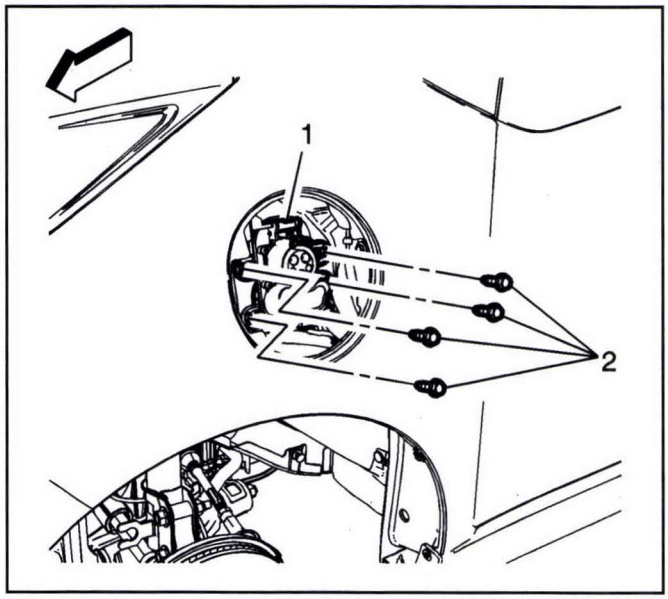

3242933

4. Install the drive motor battery charger receptacle retainer fasteners (2 and tighten to **9** N•m **(80 lb in)**.
5. Install the charge port housing. Refer to *Charge Port Housing Replacement on page 9-648*.
6. Install the high voltage disconnect circuit cover. Refer to *High Voltage Disconnect Circuit Connector Cover Replacement on page 9-174*.
7. Enable the high voltage system. Refer to *High Voltage Enabling on page 9-367*.

Drive Motor Battery Charger Receptacle Replacement (With quick charge)

Removal Procedure

Danger: Always perform the High Voltage Disabling procedure prior to servicing any High Voltage component or connection. Personal Protection Equipment (PPE) and proper procedures must be followed.

The High Voltage Disabling procedure includes the following steps:

- ***Identify how to disable high voltage.***
- ***Identify how to test for the presence of high voltage.***
- ***Identify condition under which high voltage is always present and personal protection equipment (PPE) and proper procedures must be followed.***

Before working on any high voltage system, be sure to wear the following Personal Protection Equipment:

- ***Safety glasses with appropriate side shields when within 15 meters (50 feet) of the vehicle, either indoors or outdoors.***
- ***Certified and up-to-date Class "0" Insulation gloves rated at 1000V with leather protectors.***
  - ***Visually and functionally inspect the gloves before use.***
  - ***Wear the Insulation gloves with leather protectors at all times when working with the high voltage battery assembly, whether the system is energized or not.***

Failure to follow the procedures may result in serious injury or death.

1. Disable the high voltage system. Refer to *High Voltage Disabling on page 9-363*.
2. Remove the high voltage disconnect circuit cover. Refer to *High Voltage Disconnect Circuit Connector Cover Replacement on page 9-174*.
3. Remove the charge port housing. Refer to *Charge Port Housing Replacement on page 9-648*.
4. Remove the front bumper fascia. Refer to *Front Bumper Fascia Replacement on page 3-57*.
5. Remove the right headlamp. Refer to *Headlamp Replacement on page 4-178*.

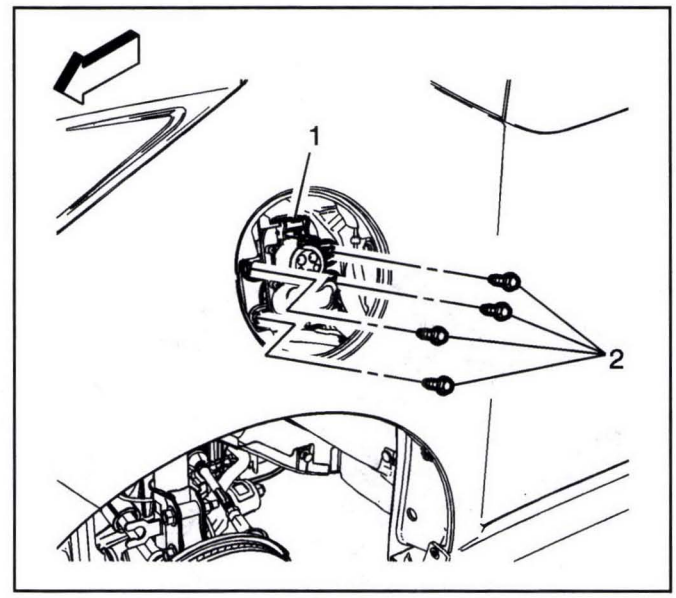

3242933

6. Remove the drive motor battery charger receptacle fasteners (2).

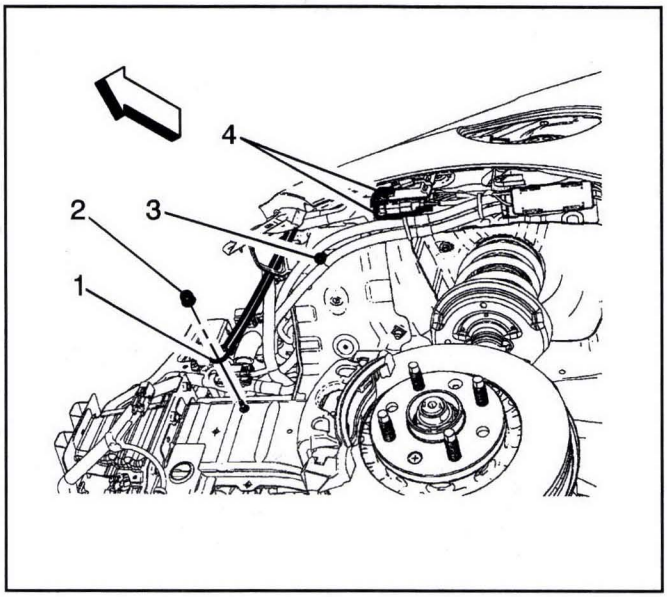

3461990

7. Remove the ground fastener (2) and detach the drive motor battery charger receptacle harness terminal (1), from the frame stud.
8. Detach the harness retainer (3) from the wheel well panel.
9. Disconnect the connectors (4) from the drive motor battery charger receptacle.

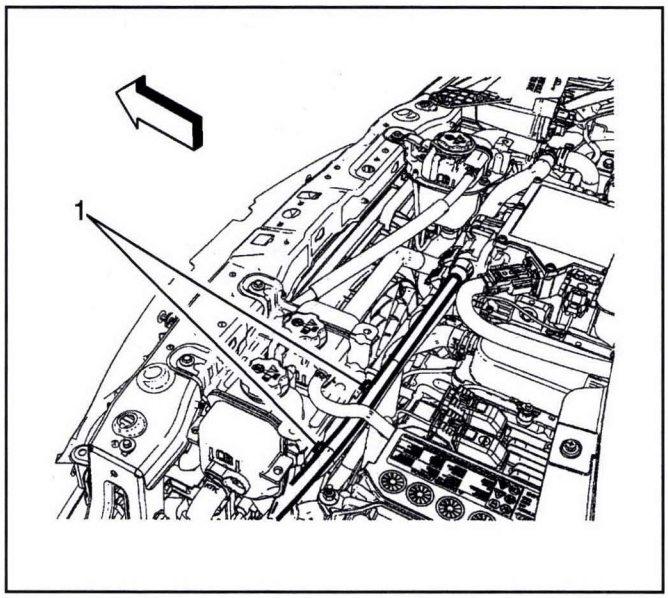

3461985

10. Detach the drive motor battery charger receptacle harness retainers (1), from the top of the hybrid energy storage compartment.

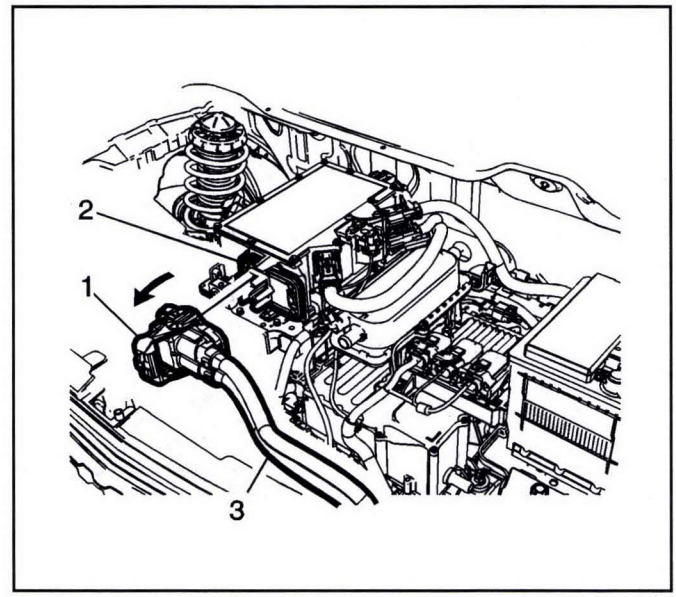

3232273

11. Release the drive motor battery charger receptacle connector (3), by sliding the connector handle (1) forward.
12. Remove the drive motor battery charger receptacle connector (3), from the high voltage disconnect control module (2).
13. Remove the drive motor battery charger receptacle (3) from the vehicle.

Installation Procedure

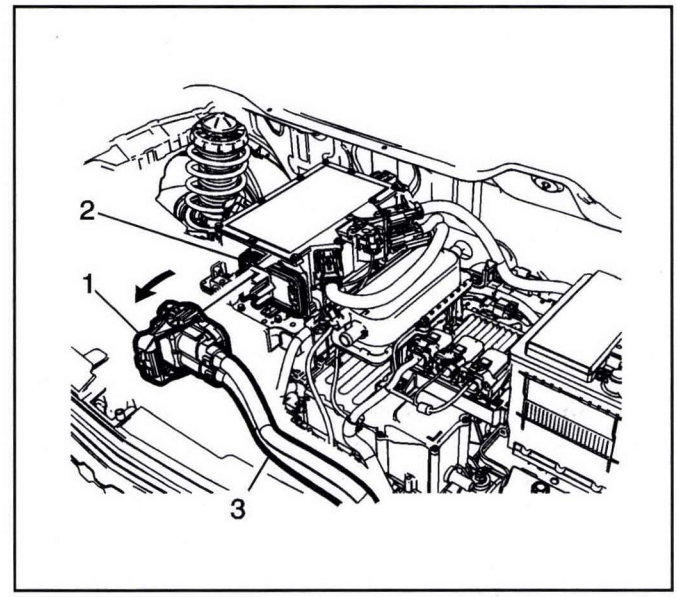

3232273

1. Install the drive motor battery charger receptacle connector (3), to the high voltage disconnect control module (2), and lock the handle (1) into the lock position.

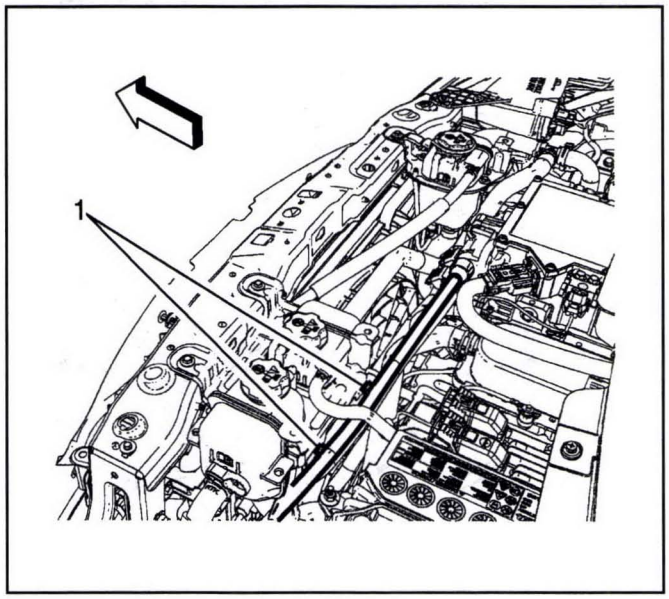

3461985

2. Install the drive motor battery charger receptacle harness retainers (1).

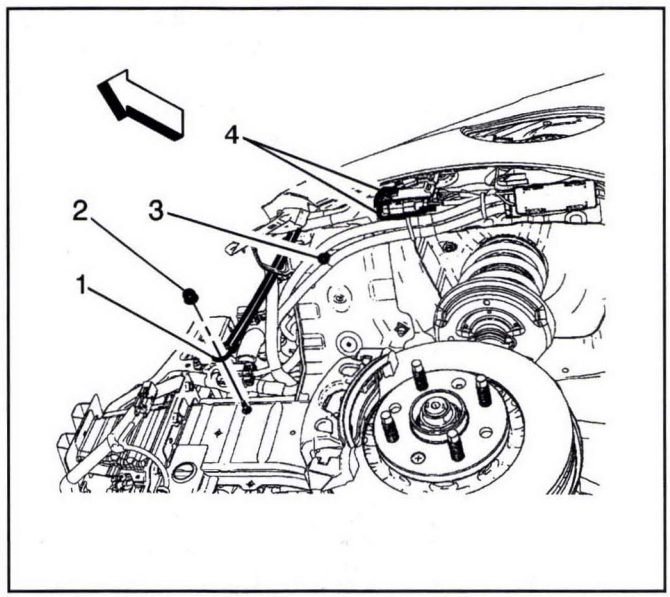

3461990

Caution: Refer to *Fastener Caution on page 0-8*.

3. Install the drive motor battery charger receptacle ground harness terminal (1), to the frame rail stud. Tighten the fastener (2) to **9 N•m (80 lb in)**.
4. Connect the drive motor battery charger receptacle harness retainer (3), to the wheel well panel.
5. Connect the connectors (4) from the drive motor battery charger receptacle.

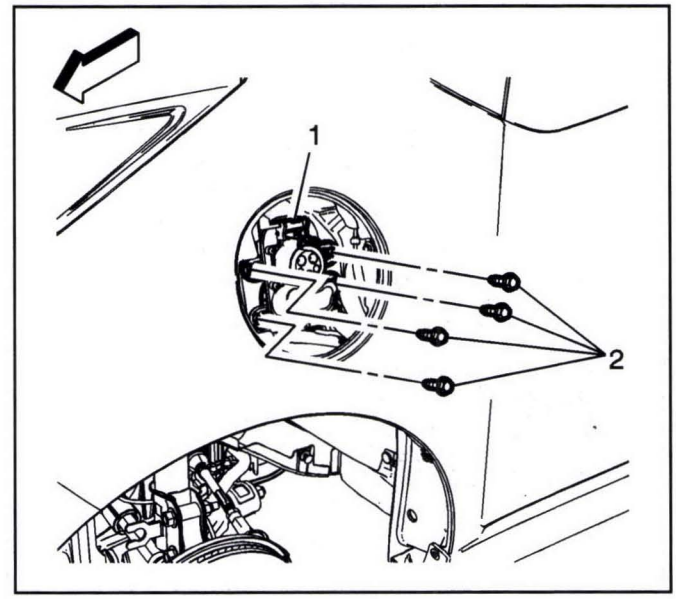

3242933

6. Install the drive motor battery charger receptacle retainer fasteners (2) and tighten to **9 N•m (80 lb in)**.
7. Install the right headlamp. Refer to *Headlamp Replacement on page 4-178*.
8. Install the front bumper fascia. Refer to *Front Bumper Fascia Replacement on page 3-57*.
9. Install the charge port housing. Refer to *Charge Port Housing Replacement on page 9-648*.
10. Install the high voltage disconnect circuit cover. Refer to *High Voltage Disconnect Circuit Connector Cover Replacement on page 9-174*.
11. Enable the high voltage system. Refer to *High Voltage Enabling on page 9-367*.

DC Charging Disabled Reset

The DC Charging Disabled Reset procedure must be completed after Isolation Faults have been repaired.

The DC Charging Disabled Reset procedure requires a scan tool sequence and can be completed using the following steps:

1. Vehicle in Service Mode.
2. With a scan tool, select DC Charging Disabled Reset in the Hybrid/EV Powertrain Control Module 2 Configuration/Reset Functions, Reset Functions list.
3. Follow the scan tool directions to complete the procedure.
4. With a scan tool, clear any DTCs that may be set.
5. Vehicle OFF.

Description and Operation

Plug-In Charging System Description and Operation

Plug-In Charging System Components

The high voltage battery charging system consists of four main components: The drive motor battery charger cable, the hybrid/EV battery charger receptacle, often referred to as the drive motor battery charger receptacle, the battery charger, often referred to as the drive motor battery charger, and the hybrid/EV battery pack. A variety of mechanical, visual and audio indicators/devices are used to communicate/interface with the customer or other user of the charging equipment.

Drive Motor Battery Charger Equipment

The drive motor battery charger cable provided with the vehicle features a standard household electrical plug on one end and a plug designed to interface with the hybrid/EV battery charger receptacle on the other end. The drive motor battery charger cable features a charge current interrupt device with AC power, fault and missing ground indicators, and it is stored beneath the vehicle's load floor. An optional charge station may be available to some customers who want to reduce the amount of time needed to recharge the high voltage battery. The optional charge station, if available, is hard-wired to a 230/240 V power supply and mounted to the wall in the customer's garage, and features the same plug on the vehicle end as the drive motor battery charger cable.

The Drive Motor Battery Charger Cable Indicators and the Vehicle Indicators

The drive motor battery charger cable has two indicators, the AC Present Indicator and the Fault Indicator. The AC Present Indicator becomes solid green when AC voltage is present at the wall plug. A flashing red AC Present Indicator means the AC voltage is out of range. Flashing red AC Present Indicator and Fault Indicator means the AC outlet does not have a proper safety ground and charging is not permitted for safety reasons. The Fault Indicator becomes solid red for a current trip or failed self check.

The battery charger is supervised and controlled by the hybrid/EV powertrain control module 2. The hybrid/EV powertrain control module 2 is the primary controller, and all diagnostic trouble codes will set in that module even though some of the diagnostics are actually run within the battery charger. Charging events can be delayed at customer request to take advantage of lower rates during non-peak hours. The status of charging events, including delays, is communicated to the user through visual indications, instrument panel mounted charge status indicator, and audio tones, charge status enunciator. The vehicle charge status indicator, located on the top middle of the instrument panel, will be solid green when the vehicle is charging under automatic control. It will have a fast flash green if the charging is delayed and will begin later. It will have a slow flash green when charging is complete. A solid yellow indicator means the vehicle is not able to accept a charge. If there is no indicator, the drive motor battery charger cable is not working properly or not connected.

Vehicle Receptacle

The vehicle receptacle, or hybrid/EV battery charger receptacle, is located behind the charging port door on the driver's side front fender. The receptacle is accessed by depressing a switch located on the inside of the driver's door.

Battery Charger

The battery charger is a serviceable assembly containing several micro-processors, two separate high voltage chargers and a single low voltage charger. It is located on top of the drive unit below the engine control module (ECM), is programmable, and communicates via serial data. Engine coolant is used to ensure that the charger does not exceed its maximum designed operating temperature. The battery charger and the power inverter module, often referred to as the drive motor generator power inverter module, are cooled by a power electronics cooling loop, which is separate from other cooling systems. The low voltage charger is used to ensure that the 12 V battery does not become depleted during a charge event. One of the high voltage chargers is used while charging with a 120 V charge source, and both are used with a 230/240 V charge source.

Battery Maintenance Mode

Battery Maintenance Mode is an automatic function that prevents deep discharge of the 12 V battery in specific circumstances. It is enabled when the drive motor battery charger cable is plugged into the hybrid/EV battery charger receptacle and the hybrid/EV battery pack is not being charged. Operation differs depending on whether the power mode is Vehicle Off or Vehicle in Service Mode.

While Vehicle Off, the 12 V battery is monitored at periodic intervals up to a maximum of 30 days. While Vehicle in Service Mode, the 12 V battery is monitored at periodic intervals up to a maximum of 60 hours. If voltage is low, the 12 V battery is charged by the battery charger using external power for up to four hours. This function is only intended to prevent a dead 12 V battery and does not provide a full charge. This is more efficient than continuously trickle charging, thus minimizing the usage of external power.

Under normal circumstances, with a battery that is charged when the vehicle is parked, Battery Maintenance Mode will simply monitor the voltage level, and no charging will be necessary. With Vehicle Off, Battery Maintenance Mode will maintain the 12 V battery for up to 30 days. For longer periods, refer to Owner Manual for instructions.

DC Fast Charging System

The DC high power fast charge system consists of the stationary DC high power charging unit, the SAE Combo Connector and the receptacle, High Power Charge Contactors (HPCC), and the hybrid/EV battery pack. The high voltage DC current is directly supplied to the hybrid/EV battery pack through the HPCC, bypassing the battery charger, often referred to as the drive motor battery charger. The receptacle has a

locking mechanism that locks the SAE Combo Connector while power is being transferred to the hybrid/EV battery pack. The mechanical lock is a safety system that is controlled by hybrid/EV powertrain control module 2. This locking mechanism will disengage once the charging process has been terminated and high voltage DC is reduced to a safe voltage level at the SAE Combo Connector.

The hybrid/EV powertrain control module 2 monitors and verifies the following conditions before the charging process can begin:

- The stationary charging unit is capable of providing high voltage DC power to the hybrid/EV battery pack.
- The hybrid/EV battery pack temperature can be maintained within the normal operating range.
- No high voltage electrical safety faults are present.
- High voltage DC connector locking mechanism is operating properly.
- Vehicle immobilization is successful, if equipped.

If any of these conditions fail during the charging process, then the charging process will be terminated.

Special Tools and Equipment

Illustration	Tool Number/Description
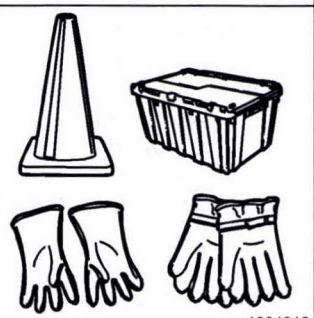 1984818	EL-48900 HEV Safety Kit or equivalent Dealer Equipment

Illustration	Tool Number/Description
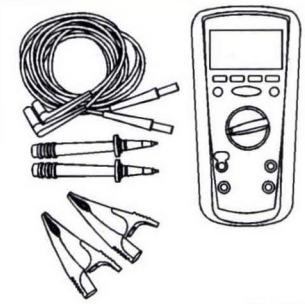 2630648	EL-50772 Insulation Multimeter
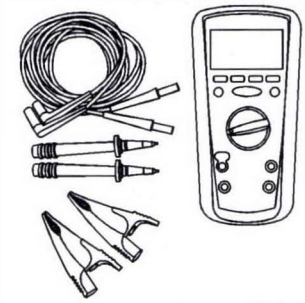 2630648	EL-50774 Low/High Resistance Meter
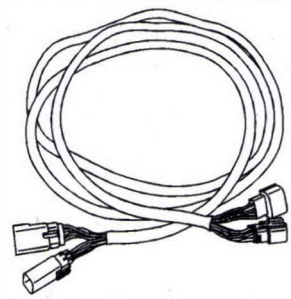 2570155	EL-51099 Low Voltage Jumper Harness Extension

Section 10

HVAC

Heating, Ventilation, and Air Conditioning 10-3
Specifications 10-3
Fastener Tightening Specifications 10-3
Approximate Fluid Capacities 10-3
Adhesives, Fluids, Lubricants, and Sealers 10-4
Diagnostic Information and Procedures 10-4
Handling of Refrigerant Lines and Fittings (R-1234yf) 10-4
Leak Testing (R-1234yf) 10-4
Air Conditioning (A/C) System Performance Test 10-5
A/C Diagnostics Chart 10-8
Heating Performance Diagnostic 10-8
Defrosting Insufficient 10-10
Noise Diagnosis - Blower Motor 10-10
Air Conditioning Compressor Oil Diagnosis ... 10-11
Noise Diagnosis - HVAC Module 10-12
Odor Diagnosis 10-13
Cabin Heater Coolant Heater System Loss of Coolant 10-14
Cabin Heater Coolant Heater System Pressure Cap Testing 10-15
Cabin Heater Coolant Heater System Leak Testing 10-16
Repair Instructions 10-17
Odor Correction 10-17
Refrigerant Recovery and Recharging 10-17
Flushing (R-1234yf) 10-19
Heater Coolant Heater Draining and Filling ... 10-21
Air Conditioning Compressor Replacement ... 10-26
Air Conditioning Compressor Bracket Replacement 10-27
Air Conditioning System Seal Replacement ... 10-29
Air Conditioning O-Ring Seal Replacement ... 10-30
Air Conditioning Compressor Hose Replacement 10-31
Air Conditioning Compressor and Condenser Hose Replacement 10-32
Air Conditioning Evaporator Hose Assembly Replacement 10-34
Air Conditioning Evaporator Thermal Expansion Valve Tube Replacement 10-37
Air Conditioning Refrigerant Service Valve Core Replacement 10-38
Receiver and Dehydrator Replacement 10-39
Air Conditioning Evaporator Thermal Expansion Valve Replacement 10-40
Air Conditioning Refrigerant Pressure Sensor Replacement - Low Pressure 10-41
Air Conditioning Refrigerant Pressure Sensor Replacement - High Pressure 10-42
Air Conditioning Condenser Replacement 10-43
Heater and Air Conditioning Evaporator and Blower Module Removal and Installation 10-43
Heater and Air Conditioning Evaporator and Blower Upper Case Replacement 10-46
Heater and Air Conditioning Evaporator and Blower Lower Case Replacement 10-47
Air Conditioning Evaporator Core Replacement (R-1234yf) 10-47
Air Conditioning Evaporator Module Drain Hose Replacement 10-49
Heater Inlet Hose Replacement 10-50
Auxiliary Heater Inlet Hose Replacement 10-51
Auxiliary Heater Outlet Hose Replacement 10-52
Heater Inlet And Outlet Pipe Replacement 10-53
Heater Outlet Hose Replacement 10-54
Heater Coolant Pump Replacement 10-56
Passenger Compartment Air Filter Replacement 10-57
Air Inlet Assembly Replacement 10-58
Air Inlet Housing Replacement 10-59
Blower Motor Control Replacement 10-60
Blower Motor Replacement 10-61
Air Distributor Case Replacement 10-62
Instrument Panel Outer Air Outlet Replacement - Left Side 10-63
Instrument Panel Center Air Outlet Replacement 10-64
Instrument Panel Outer Air Outlet Replacement - Right Side 10-65
Instrument Panel Center Air Outlet Duct Replacement 10-66
Windshield Defroster Outlet Duct Replacement 10-67
Windshield Defroster Nozzle Grille Replacement 10-68
Side Window Defogger Outlet Duct Replacement - Left Side 10-69
Side Window Defogger Outlet Duct Replacement - Right Side 10-70

Floor Air Outlet Duct Replacement - Left Side 10-71
Floor Air Outlet Duct Replacement - Right Side 10-72
Heater Core Replacement 10-73
Heater Coolant Heater Replacement 10-74
Heater Coolant Heater Bracket Replacement 10-75
Engine Coolant Temperature Sensor Replacement - Heater Coolant Heater 10-76
Description and Operation 10-77
Heating and Air Conditioning System Description and Operation 10-77
Special Tools and Equipment 10-77

HVAC - Automatic 10-80
Schematic and Routing Diagrams 10-80
HVAC Schematics 10-81
Diagnostic Information and Procedures 10-87
HVAC Component Replacement Reference 10-87
DTC B0163 10-88
DTC B0173, B0178, or B3933 10-90
DTC B018A, B048C, B048F, or B1395 10-93
DTC B0183 10-96
DTC B0193 10-98
DTC B0223, B0233, B023A, or B0408 10-101
DTC B0468, B046B, or B046C 10-104
DTC B046A 10-107
DTC P0071-P0073 10-109
DTC P0532 or P0533 10-112
DTC P0534 10-114
DTC P0D69-P0D7F 10-117
DTC P0AF8 10-121
DTC P151C or P2516-P2518 10-123
DTC P1ECA or P1EC9 10-126
DTC P1F0A-P1F0D 10-128
Symptoms - HVAC Systems - Automatic 10-129
HVAC System Malfunction 10-130
Air Conditioning Compressor Malfunction 10-131
Afterblow Enabling 10-132
Actuator Recalibration 10-133
Repair Instructions 10-134
Heater and Air Conditioning Remote Control Replacement 10-134
Auxiliary Heater and Air Conditioning Control Replacement 10-135
Air Inlet Valve Actuator Replacement 10-136
Mode Valve Link Replacement 10-137
Mode Control Cam Actuator Replacement 10-138
Temperature Valve Actuator Replacement 10-139
Evaporator Air Temperature Sensor Replacement 10-140
Inside Air Temperature Sensor Replacement - Left Side Lower 10-141
Inside Air Temperature Sensor Replacement - Right Side Upper 10-142
Inside Air Moisture and Windshield Temperature Sensor Replacement 10-143
Sun Load Temperature Sensor Replacement 10-144
Description and Operation 10-144
Automatic HVAC Description and Operation 10-144

Heating, Ventilation, and Air Conditioning

Specifications

Fastener Tightening Specifications

Application	Specification	
	Metric	English
Air Conditioning Compressor Bolt	23 N•m	17 lb ft
Air Conditioning Compressor Bracket Bolt	22 N•m	16 lb ft
Air Conditioning Compressor Bracket Stud	10 N•m	89 lb in
Air Conditioning Compressor Hose Bolt	22 N•m	16 lb ft
Air Conditioning Compressor Hose Nut	22 N•m	16 lb ft
Air Conditioning Compressor Nut	23 N•m	17 lb ft
Air Conditioning Compressor and Condenser Hose Bolt	22 N•m	16 lb ft
Air Conditioning Compressor and Condenser Hose Nut	22 N•m	16 lb ft
Air Conditioning Evaporator Hose Bolt to the Front Compartment Front Inner Side Rail	9 N•m	80 lb in
Air Conditioning Evaporator Hose Nut	22 N•m	16 lb ft
Air Conditioning Evaporator Hose Nut to the Front Wheelhouse Rear Panel Stud	9 N•m	80 lb in
Air Conditioning Thermal Expansion Valve Bolt	7 N•m	62 lb in
HVAC Module Assembly Bolt	9 N•m	80 lb in
Heater Coolant Heater Bracket Nut	9 N•m	80 lb in
Heater Coolant Heater Nut	9 N•m	80 lb in
Heater Coolant Pump Nut	9 N•m	80 lb in
Instrument Panel Center Air Outlet Bolt	1.5 N•m	13.3 lb in

Approximate Fluid Capacities

Application	Specification	
	Metric	English
Refrigerant Charge, R-1234yf	LHD: 575 g	1.3 lb
	RHD: 600 g	1.32 lb
Total System POE Oil Capacity	120 ml	4.1 oz
Compressor[2]	50 ml[1]	1.7 oz[1]
Condenser	20 ml[1]	0.7 oz[1]
Desiccant Cartridge	10 ml[1]	0.3 oz[1]
Evaporator	10 ml[1]	0.3 oz[1]
Drive Motor Battery Cooler	10 ml[1]	0.3 oz[1]
Abrupt Refrigerant Loss	40 ml[3]	1.4 oz[3]

[1]If more than the specified amount of POE oil was drained from a component, add the equal amount of oil drained.

[2]The service compressor contains 50 ml (1.7 oz) of POE oil.

[3]Abrupt refrigerant loss due to large leak, hose rupture, collision, or pressure relief valve opening. Conditions that allow the refrigerant to seep or bleed off over time do not cause this oil loss. Upon replacement of a component that caused a large refrigerant loss, also add the required amount of oil for the particular component.

Adhesives, Fluids, Lubricants, and Sealers

Application	Type of Material	GM Part Number		
		United States	Canada	Europe
POG Oil (R-1234yf)	Lubricant	88862657	88862658	Refer to Electronic Parts Catalog.

Diagnostic Information and Procedures

Handling of Refrigerant Lines and Fittings (R-1234yf)

Caution: To avoid system damage use only R-1234yf and R-134a dedicated tools when servicing the A/C system.

- Keep all metal tubing lines free of dents or kinks. Any line restrictions will cause the loss of system capacity.
- Never bend a flexible hose line to a radius of less than four times the diameter of the hose.
- Never allow a flexible hose line to come within 65 mm (2–1/2 in) of the exhaust manifold.
- Inspect flexible hose lines regularly for leaks or brittleness.
- Replace flexible hose lines with new lines if you find signs of deterioration or leaking.
- Discharge the refrigeration system of all refrigerant before disconnecting any fitting in the refrigeration system.
- Proceed very cautiously regardless of the gauge readings.

Warning: For personal protection, goggles and lint-free gloves should be worn and a clean cloth wrapped around fittings, valves, and connections when doing work that includes opening the refrigerant system. If refrigerant comes in contact with any part of the body severe frostbite and personal injury can result. The exposed area should be flushed immediately with cold water and prompt medical help should be obtained.

- Open the fittings very slowly.
- If you notice pressure when you loosen a fitting, allow the pressure to bleed off as described Discharging, Adding Oil, Evacuating, and Charging Procedures for A/C System .
- Cap or tape any refrigerant line immediately after it is opened. This will prevent the entrance of moisture and dirt, which can cause internal compressor wear or plugged lines in the condenser, the evaporator core, the expansion valve, or the compressor inlet screens.

  Note: Use two proper wrenches to connect the fittings.
- Back up the opposing fitting to prevent distortion of the connecting lines or the components.
- Keep the sealing surfaces in perfect condition. A burr or a piece of dirt may cause a refrigerant leak.
- When seal washers are used, always install the seal washer without lubrication.
- When O-rings are used, always lightly coat the new O-ring seal with mineral base 525 viscosity refrigerant oil prior to installation.

Leak Testing (R-1234yf)

Special Tools

- *GE-41447* A/C Tracer Dye-Box of 24
- *GE-42220* Universal 12V Leak Detection Lamp
- *GE-43872* Fluorescent Dye Cleaner
- *GE-50078* Electronic Leak Detector

For equivalent regional tools, refer to *Special Tools on page 10-77*.

Refrigerant Leak Testing

Technicians repairing or servicing motor vehicle air conditioning (MVAC) systems must be trained and certified by an EPA approved organization. Certification is obtained by passing an EPA approved examination. (http://www.epa.gov/ozone/title6/609/technicians/609certs.html)

Warning: Technicians shall only use a SAE J2913 certified electronic leak detector when checking for leaks with an R-1234yf vehicles A/C refrigerant system. Certain leak detection devices (heated diode or corona discharge) could serve as ignition sources in the presence of hydrocarbons or other flammable refrigerants. Failure to follow these precautions may cause personal injury and/or damage to the vehicle or its components.

Warning: Refer to R-1234yf Proper Service Procedures Warning on page 0-5.

Warning: R1234-yf is considered a mildly flammable refrigerant and proper refrigerant leak testing should be completed to ensure safe and proper operation. Failure to follow these precautions may cause personal injury and/or damage to the vehicle or its components.

Caution: Leak detection shall only be done with the refrigerant that is specified for the system. Do not attempt to increase pressure of the A/C refrigerant system with shop air or another type of refrigerant. Failure to follow the above guidelines could result in damage to the vehicle or its components.

Note: General Motors vehicles are manufactured with fluorescent dye installed in the A/C refrigerant system.

The fluorescent dye mixes and flows with the A/C compressor oil throughout the refrigerant system.

Note: The only time adding additional fluorescent dye is required is after flushing the A/C system.

Verifying some passive leaks may require using *GE-50078* Electronic Leak Detector or a SAE J2913 certified electronic leak detector, even though the refrigerant system contains fluorescent dye.

Fluorescent Leak Detection

Fluorescent dye will assist in locating any leaks in the A/C system.

- Condensation on the evaporator core or the refrigerant lines may wash the PAG oil and fluorescent dye away from the actual leak. Condensation may also carry dye through the HVAC module drain.
- Leaks in the A/C system will be indicated in a light green or yellow color when using the leak detection lamp.

  Use the leak detection lamp in the following areas:
  - All fittings or connections that use seal washers or O-rings
  - All of the A/C components
  - The A/C compressor shaft seal
  - The A/C hoses and pressure switches
  - The HVAC module drain tube, if the evaporator core is suspected of leaking
  - The service port sealing caps
  - The sealing cap is the primary seal for the service ports.
- Follow the instructions supplied with *GE-42220* Universal 12V Leak Detection Lamp.
- To prevent false diagnosis in the future, thoroughly clean the residual dye from any area where leaks were found. Use a rag and the approved *GE-43872* Fluorescent Dye Cleaner.

Fluorescent Dye Injection

Note: Use only fluorescent dye approved by General Motors.

- Not all of the fluorescent dyes are compatible with PAG oil. Some types of dye decrease the oil viscosity or may chemically react with the oil.
- *GE-41447* A/C Tracer Dye-Box of 24 can be poured directly into a removed A/C component.

Note: Do NOT overcharge the A/C system with dye.

- Leak detection dye requires time to work. Depending upon the leak rate, a leak may not become visible for between 15 minutes and 7 days.
- To prevent false diagnosis, thoroughly clean any residual dye from the service port with a rag and the approved *GE-43872* Fluorescent Dye Cleaner.

Electronic Leak Detector – SAE J2913 Certified

Ensure that the vehicle has at least 15 percent of the specified refrigerant charge in the A/C refrigeration system in order to perform a leak test. Refer to *Refrigerant Recovery and Recharging on page 10-17*.

Note: Follow a continuous path in order to ensure that you will not miss any possible leaks. Test all areas of the system for leaks.

Follow the manufacturer instructions supplied with *GE-50078* Electronic Leak Detector or a SAE J2913 certified electronic leak detector.

Air Conditioning (A/C) System Performance Test

This test measures the operating efficiency of the A/C system under the following conditions:

- The current ambient air temperature
- The current relative humidity
- The high side pressure of the A/C system
- The low side pressure of the A/C system
- The temperature of the air being discharged into the passenger compartment

Test Description

The numbers below refer to the step numbers on the diagnostic table.

1. This step determines if the A/C system has at least the minimum refrigerant charge required to operate the system without damage.
2. This step measures the performance of the A/C system.
3. This step is to allow for vehicle variations as well as high ambient temperatures.

Air Conditioning (A/C) System Performance Test

Step	Action	Values	Yes	No
Note: • The ambient air temperature must be at least 16°C (60°F) . • Do not induce additional air flow across the front of the vehicle during the test. • If you were sent here from a DTC diagnostic table, clear the DTC upon completion of this test.				
1	1. Park the vehicle inside or in the shade. 2. Open the windows in order to ventilate the interior of the vehicle. 3. If the A/C system was operating, allow the A/C system to equalize for about 2 minutes. 4. Turn OFF the ignition. 5. Install the *J-43600* ACR 2000 Air Conditioning Service Center or *GE-48800* CoolTech A/C Recharge Machine. 6. Record the ambient air temperature and humidity. 7. Record the low and high side STATIC pressure readings. Are both the low side and high side pressures within the specified value?	More than 16°C (60°F) – 345 kPa (50 psi) More than 24°C (75°F) – 483 kPa (70 psi) More than 33°C (90°F) – 690 kPa (100 psi)	Go to *Step 2*	Go to *Leak Testing (R-1234yf) on page 10-4*
2	**Note:** Record the relative humidity and the ambient air temperature at the time of the test. 1. Close the vehicle doors and windows. 2. Open the drivers door window 12.7–15.2 cm (5–6 in). 3. Select the following HVAC control settings: • The A/C is ON. • The coldest temperature setting • The maximum blower speed • Recirculation mode • The instrument panel (I/P) outlet mode • All I/P outlets are OPEN. 4. Install thermometers in the left and right center panel air outlets. 5. Apply the parking brake. 6. Place the transaxle/transmission in one of the following positions: • PARK (Automatic) • NEUTRAL (Manual) 7. Start the engine and warm to operating temperature. 8. Operate the A/C system for 5 minutes. 9. Inspect A/C components for the following conditions: • Abnormal frost areas • Unusual noises 10. Record the following information: • The panel outlet air temperatures • The low-side pressure • The high-side pressure 11. Compare the low and high side pressures and the panel output temperatures to the A/C Performance Table below. Does all the data recorded fall within the specified ranges of the A/C Performance Table below?	—	Go to *Step 5*	Go to *Step 3*

Air Conditioning (A/C) System Performance Test (cont'd)

Step	Action	Values	Yes	No
3	If the pressures and temperatures recorded do not fall within the specified ranges: 1. Continue to operate the A/C system for an additional 5 minutes. 2. Record the pressures and temperatures again. 3. Compare the low and high side pressures and the panel output temperature to the A/C Performance Table below. Does all the data recorded fall within the specified ranges of the A/C Performance Table below?	—	Go to *Step 5*	Go to *Step 4*
4	Perform the necessary repairs. Refer to *A/C Diagnostics Chart on page 10-8*. Is the action complete?	—	Go to *Step 5*	—
5	Operate the system in order to verify the test results. Did you find the same results?	—	System OK	Go to *Symptoms - HVAC Systems - Automatic on page 10-129*

A/C Performance Table

Ambient Temperature	Relative Humidity	Low Side Service Port Pressure	High Side Service Port Pressure	Maximum Left Center Discharge Air Temperature
13–18°C (55–65°F)	0–100%	296–268 kPa (43–39 psi)	826–1198 kPa (120–174 psi)	9°C (48°F)
19–24°C (66–75°F)	Less than 40%	310–310 kPa (45–45 psi)	950–1329 kPa (138–193 psi)	12°C (52°F)
	Greater than 40%	282–289 kPa (41–42 psi)	1019–1446 kPa (148–210 psi)	12°C (52°F)
25–29°C (76–85°F)	Less than 35%	275–296 kPa (40–43 psi)	1178–1502 kPa (145–190 psi)	12°C (52°F)
	35–50%	268–296 kPa (39–43 psi)	1240–1557 kPa (180–226 psi)	12°C (52°F)
	Greater than 50%	261–296 kPa (38–43 psi)	1281–1660 kPa (186–241 psi)	12°C (54°F)
30–35°C (86–95°F)	Less than 30%	254–275 kPa (37–40 psi)	1357–1708 kPa (197–248 psi)	12°C (52°F)
	30–50%	254–289 kPa (37–42 psi)	1412–1791 kPa (205–260 psi)	13°C (54°F)
	Greater than 50%	254–303 kPa (37–44 psi)	1481-1908 kPa (215–277 psi)	13°C (55°F)
36–41°C (96–105°F)	Less than 20%	227–248 kPa (33–36 psi)	1550–1887 kPa (225–274 psi)	10°C (50°F)
	20–40%	234–268 kPa (34–39 psi)	1591–1977 kPa (231–287 psi)	13°C (54°F)
	Greater than 40%	241–289 kPa (35–42 psi)	1667–2067 kPa (242–300 psi)	13°C (55°F)
42–46°C (106–115°F)	Less than 20%	199–227 kPa (29–33 psi)	1756–2067 kPa (255–300 psi)	10°C (50°F)
	Greater than 20%	206–254 kPa (30–37 psi)	1812–2170 kPa (263–315 psi)	13°C (54°F)
47–49°C (116–120°F)	Below 30%	186–227 kPa (27–33 psi)	1991–2308 kPa (289–335 psi)	12°C (52°F)

A/C Diagnostics Chart

A/C System Concern		Potential Causes
Compressor Inoperative		Electrical Wiring Issue
		No or Low Refrigerant Charge
		Compressor Internal Malfunction
		Compressor Clutch Malfunction
		A/C Pressure Sensor Malfunction
		Evaporator Air Temperature (EAT) Malfunction
		HVAC Controls Malfunction
Low Side Gauge Reading	**High Side Gauge Reading**	**Potential Causes**
Same as High Side	Same as Low Side	No or Low Refrigerant Charge
		Compressor Malfunction
		A/C Pressure Sensor Malfunction
		EAT Malfunction
		HVAC Controls Malfunction
Normal	Normal	Temperature Actuator Malfunction
		Temperature Door Malfunction
Low	Low	Low Refrigerant Charge
		Restriction between the Compressor Outlet and Low Side Port
	Low/Normal	Evaporator Freezing/EAT Malfunction
	High	Compressor Stuck at Maximum Displacement/EAT Malfunction
Normal/High	Normal/High	PAG or POE Oil Overcharge
High	Low	Restriction between the Low Side Port and Compressor Inlet
		Expansion Device Stuck Open
		Compressor has Low Displacement or Internal Malfunction
	High	Malfunctioning Cooling Fans
		Refrigerant Overcharge
		Restricted Condenser Air Flow
		Air in A/C System
Note: Restrictions can occur in any part of an A/C system and may result in various gauge pressure values, depending on the system design and service port locations. The use of a non-contact, infrared thermometer can help diagnose a restricted A/C system with the ability to quickly observe significant, unexpected temperature changes in components and plumbing due to debris, contamination, pinched/damaged hoses, etc.		

Heating Performance Diagnostic

Step	Action	Yes	No
DEFINITION: Heating system performance.			
1	Were you sent here from Symptoms or another diagnostic table?	Go to *Step 2*	Go to *Symptoms - HVAC Systems - Automatic on page 10-129*

Heating Performance Diagnostic (cont'd)

Step	Action	Yes	No
2	***Warning: Refer to Moving Parts and Hot Surfaces Warning on page 0-5.*** 1. Turn ignition to on. 2. Select vent mode. 3. Select the warmest temperature setting. 4. Select Maximum blower speed. 5. Feel the temperature of the heater core inlet hose. Does the heater core inlet hose feel warm to hot?	Go to *Step 3*	Go to *Step 9*
3	1. Select the minimum blower speed. 2. Feel the temperature of the heater core inlet and outlet hoses. Does the heater core inlet hose feel warmer than the heater core outlet hose?	Go to *Step 7*	Go to *Step 4*
4	1. Install a thermometer into the center I/P panel air outlet. 2. Secure a thermometer to the heater core outlet hose. 3. Select the maximum blower speed. 4. Record the temperature at the following location. 5. Record the temperature at the following locations: • The center I/P panel air outlet • The heater core outlet hose 6. Compare the recorded temperatures. Are the two temperature readings about equal?	Go to *Step 5*	Go to *Step 6*
5	1. Inspect and repair the following areas of the vehicle for cold air leaks: • The cowl • The recirculation door • The HVAC module case 2. Perform the necessary repairs. Are the repairs complete?	Go to *Step 11*	—
6	1. Inspect the temperature door operation. Refer to *Heating and Air Conditioning System Description and Operation on page 10-77*. 2. Perform any necessary repairs. Are the repairs complete?	Go to *Step 11*	—
7	1. Turn the ignition to off. 2. Backflush the heater core. 3. Turn the ignition to on. 4. Select the vent mode. 5. Select the minimum blower speed. 6. Select the warmest temperature setting. 7. Feel the temperature of the heater core inlet and outlet hoses. Does the heater core inlet hose feel warmer than the heater core outlet hose?	Go to *Step 8*	Go to *Step 11*
8	Replace the heater core. Refer to *Heater Core Replacement on page 10-73*. Is the repair complete?	Go to *Step 11*	—
9	Inspect and repair the following areas: • Kinked hose • Heater valve inlet filter • Air in the coolant circuit • Inoperable heater valve Did you find and correct the condition?	Go to *Step 11*	Go to *Step 10*
10	Inspect the coolant heater control module. Refer to *Heating Performance Diagnostic on page 10-8*. Is the repair complete?	Go to *Step 11*	—

Heating Performance Diagnostic (cont'd)

Step	Action	Yes	No
11	Operate the system in order to verify the repair. Did you find and correct the condition?	System OK	Go to *Step 2*

Defrosting Insufficient

Step	Action	Yes	No
DEFINITION: Time required to defrost the windshield is longer than normal.			
1	Were you sent here from Symptoms or another diagnostic table?	Go to *Step 2*	Go to *Symptoms - HVAC Systems - Automatic on page 10-129*
2	1. Turn ignition to ON.. 2. Select the DEFROST mode. 3. Select the maximum blower speed. Does sufficient air flow from the defroster outlets?	Go to *Step 3*	Go to *Step 6*
3	***Warning: Refer to Moving Parts and Hot Surfaces Warning on page 0-5.*** 1. Select the minimum blower speed. 2. Select the maximum temperature setting. 3. Feel the temperature of the inlet and outlet hoses at the heater core. Does the inlet hose feel warmer than the outlet hose?	Go to *Step 7*	Go to *Step 4*
4	Perform the A/C system performance test. Refer to *Air Conditioning (A/C) System Performance Test on page 10-5*. Is the A/C system operating within the specifications?	Go to *Step 5*	Go to *Step 8*
5	Inspect for correct operation of the air inlet door. Is the air inlet door operating correctly?	Go to *Step 10*	Go to *Step 9*
6	Repair the air delivery concern. Refer to *Diagnostic Starting Point - Vehicle on page 6-90*. Is the repair complete?	Go to *Step 10*	—
7	Repair the heating concern. Refer to *Heating Performance Diagnostic on page 10-8*. Is the repair complete?	Go to *Step 10*	—
8	Repair the A/C performance concern. Refer to *Air Conditioning (A/C) System Performance Test on page 10-5*. Is the repair complete?	Go to *Step 10*	—
9	Repair the air inlet door concern. Refer to *Air Inlet Assembly Replacement on page 10-58*. Is the repair complete?	Go to *Step 10*	—
10	Operate the system in order to verify the repair. Did you find and correct the problem?	System OK	Go to *Step 2*

Noise Diagnosis - Blower Motor

Step	Action	Yes	No
DEFINITION: Noise originating from the blower motor.			
1	Were you sent here from Symptoms or another diagnostic table?	Go to *Step 2*	Go to *Symptoms - HVAC Systems - Automatic on page 10-129*
2	Inspect the air inlet grille for debris. Is debris present?	Go to *Step 8*	Go to *Step 3*

Noise Diagnosis - Blower Motor (cont'd)

Step	Action	Yes	No
3	1. Sit inside the vehicle. 2. Close the vehicle doors and windows. 3. Turn the ignition to the accessory position. 4. Cycle the blower motor through all of the speeds and modes in order to determine where and when the noise occurs. Is a noise evident during the blower operation?	Go to *Step 4*	Go to *Step 11*
4	Inspect for excessive vibration at each blower motor speed by feeling the blower case. Is excess vibration present?	Go to *Step 6*	Go to *Step 5*
5	Listen to the blower motor at each speed. Is the blower motor making a squeaking or chirping noise?	Go to *Step 9*	Go to *Step 11*
6	1. Remove the blower motor. Refer to *Blower Motor Replacement on page 10-61*. 2. Inspect the blower motor impeller for deposits of foreign material. 3. Inspect the blower motor for deposits of foreign material. Did you find any foreign material on the blower motor or blower motor impeller?	Go to *Step 8*	Go to *Step 7*
7	Inspect the blower motor for the following conditions: • Cracked blades • A loose impeller retainer • Improper impeller alignment Did you find any of these conditions?	Go to *Step 9*	Go to *Step 10*
8	Remove the foreign material. Is the action complete?	Go to *Step 10*	—
9	Replace the blower motor. Refer to *Blower Motor Replacement on page 10-61*. Is the repair complete?	Go to *Step 11*	—
10	Install the blower motor. Refer to *Blower Motor Replacement on page 10-61*. Is the action complete?	Go to *Step 11*	—
11	Operate the system in order to verify the repair. Did you find and correct the condition?	System OK	Go to *Step 2*

Air Conditioning Compressor Oil Diagnosis

Note: To avoid repeat compressor failure, always inspect the condition of the refrigerant oil and take the appropriate corrective action before installing the replacement compressor.

Air Conditioning Compressor Oil Diagnosis

Condition	Corrective Action
Clean Oil no debris present	No corrective action necessary.

Air Conditioning Compressor Oil Diagnosis (cont'd)

Condition	Corrective Action
Clean Oil with debris present	• Inspect the suction port of the replacement compressor for presence of a suction screen. If the replacement compressor does NOT contain a suction screen, install suction screen in the line. • Replace desiccant or component containing the desiccant. • Replace desiccant filter if applicable. • Remove and inspect high pressure side filter (if applicable). • Remove, inspect, clean, or replace orifice tube. • If the system has a front orifice tube and is equipped with a filter in the rear auxiliary line, remove, inspect, clean, or replace the filter. • If the system has a front orifice tube and is not equipped with a filter in the rear auxiliary line, remove the filter in the auxiliary TXV and Install a universal inline A/C Filter P/N 89016656 (AC Delco P/N 15-10413) as close to the rear TXV as possible.
Dark brown/black and/or pungent/ unusual odor with no debris present	• Replace desiccant or component containing the desiccant. • Replace desiccant filter if applicable. • Flush refrigerant system. Refer to *Flushing (R-1234yf) on page 10-19*.
Dark brown/black and/or pungent/ unusual odor with debris present	• Replace desiccant or component containing the desiccant. • Replace desiccant filter if applicable. • Flush refrigerant system. Refer to *Flushing (R-1234yf) on page 10-19*. • Inspect the suction port of the replacement compressor for presence of a suction screen. If the replacement compressor does NOT contain a suction screen, install suction screen. • Remove and inspect high pressure side filter (if applicable). • Remove, inspect, clean, or replace orifice tube. • If the system has a front orifice tube and is equipped with a filter in the rear auxiliary line, remove, inspect, clean, or replace the filter. • If the system has a front orifice tube and is not equipped with a filter in the rear auxiliary line, remove the filter in the auxiliary TXV and install a universal inline A/C Filter P/N 89016656 (AC Delco P/N 15-10413) as close to the rear TXV as possible.
Oil Overcharge	Flush refrigerant system. Refer to *Flushing (R-1234yf) on page 10-19*.
Refrigerant Contamination	Flush refrigerant system. Refer to *Flushing (R-1234yf) on page 10-19*.
Hybrid Polyolester Refrigerant Oil (POE) Contamination	• Flush refrigerant system. Refer to *Flushing (R-1234yf) on page 10-19*. • Replace desiccant or component containing the desiccant. • Replace desiccant filter if applicable.

Noise Diagnosis - HVAC Module

Step	Action	Yes	No
DEFINITION: Noise originating from the HVAC module.			
1	Were you sent here from Symptoms or another diagnostic table?	Go to *Step 2*	Go to *Symptoms - HVAC Systems - Automatic on page 10-129*
2	1. Start the engine. 2. Cycle through all of the following: • Blower motor speeds • HVAC modes • Temperature control settings 3. Determine the location of noise: • Recirculation door • Temperature door • Mode valve Is noise evident when selecting recirculation?	Go to *Step 6*	Go to *Step 3*
3	Is noise evident when selecting temperature?	Go to *Step 6*	Go to *Step 4*
4	Is noise evident when selecting mode ?	Go to *Step 5*	Go to *Step 2*

Noise Diagnosis - HVAC Module (cont'd)

Step	Action	Yes	No
5	1. Remove the HVAC module. Refer to *Heater and Air Conditioning Evaporator and Blower Module Removal and Installation on page 10-43.* 2. Inspect the mode valve for dust, dirt or debris. Is dust, dirt or debris present?	Go to *Step 11*	Go to *Step 12*
6	Remove the HVAC module. Refer to *Heater and Air Conditioning Evaporator and Blower Module Removal and Installation on page 10-43.* Is action complete?	Go to *Step 7*	—
7	1. Inspect the air flow door for proper operation. 2. Inspect the ducts for obstructions or foreign materials. Were any of these conditions found?	Go to *Step 10*	Go to *Step 8*
8	Inspect air flow door for warping or cracking. Is air flow door in normal condition?	Go to *Step 13*	Go to *Step 9*
9	Replace air flow door. Is repair complete?	Go to *Step 13*	—
10	Remove any obstructions or foreign material found. Is action complete?	Go to *Step 13*	—
11	Vacuum and remove dust, dirt and debris. Is action complete?	Go to *Step 14*	—
12	Replace the upper evaporator case. Refer to *Air Conditioning Evaporator Core Replacement (R-1234yf) on page 10-47.* Is action complete?	Go to *Step 14*	—
13	Install the HVAC Module. Refer to *Heater and Air Conditioning Evaporator and Blower Module Removal and Installation on page 10-43.* Is action complete?	Go to *Step 14*	—
14	Operate the system to verify the repair. Did you find and correct the condition?	System OK	Go to *Step 2*

Odor Diagnosis

Step	Action	Yes	No
DEFINITION: Odor originating or noticed through the HVAC system.			
1	Were you sent here from Symptoms or another diagnostic table?	Go to *Step 2*	Go to *Symptoms - HVAC Systems - Automatic on page 10-129*
2	1. Sit inside the vehicle. 2. Close all of the doors and windows. 3. Start Turn ignition to on. 4. Select the maximum blower speed. 5. Select the PANEL air outlet mode. 6. Select the coldest temperature setting. 7. Cycle through all of the blower speeds, modes and temperatures to define what type of odor is present. • Musty smell • Coolant smell • Oil smell Does the odor have a musty smell?	Go to *Step 3*	Go to *Step 8*
3	Inspect the HVAC filter and the air inlet grille for debris. Is debris present?	Go to *Step 4*	Go to *Step 5*
4	Remove any debris. Is the action complete?	Go to *Step 15*	—

Odor Diagnosis (cont'd)

Step	Action	Yes	No
5	Inspect for wet carpeting. Is the carpet wet?	Go to *Step 6*	Go to *Step 8*
6	Inspect for the following conditions: 1. Water leaks around the windshield 2. Blockage of the HVAC module drain 3. Leaks around the door seals Is a leak present?	Go to *Step 7*	Go to *Step 15*
7	Repair the leak as necessary. Is the repair complete?	Go to *Step 15*	—
8	Does the odor have a coolant smell?	Go to *Step 9*	Go to *Step 12*
9	Inspect the cooling system for leaks. Refer to *Hybrid Cooling System Leak Test on page 9-256* or *Cabin Heater Coolant Heater System Loss of Coolant on page 10-14*. Is a leak present?	Go to *Step 10*	Go to *Step 12*
10	Inspect for coolant leaking inside the vehicle or for a film build-up on the windshield. Is the condition present?	Go to *Step 11*	Go to *Step 15*
11	Replace the heater core. Refer to *Heater Core Replacement on page 10-73*. Is the repair complete?	Go to *Step 15*	—
12	Does the odor have an oily smell?	Go to *Step 13*	Go to *Step 15*
13	1. Inspect the engine compartment for any leaks. Refer to the following procedures: • Oil Leak Diagnosis • Fluid Leak Diagnosis 2. Repair any oil leaks. Is the repair complete?	Go to *Step 15*	—
14	A musty odor can be caused by mold or mildew build-up on the evaporator or the heater core or inside of the HVAC module. Refer to *Odor Correction on page 10-17*. Is the action complete?	Go to *Step 15*	—
15	Operate the system in order to verify the repair. Did you find and correct the condition?	System OK	Go to *Step 2*

Cabin Heater Coolant Heater System Loss of Coolant

Step	Action	Yes	No
DEFINITION: The heater coolant heater cooling system is losing coolant either internally or externally.			
1	Inspect the coolant level. Is the coolant at the proper level?	Go to *Step 13*	Go to *Step 2*
2	Fill the cooling system to the proper level. Refer to *Heater Coolant Heater Draining and Filling on page 10-21*. Is the action complete?	Go to *Step 3*	—
3	Overheating can cause a loss of coolant. Is the Heater Coolant Heater Cooling system overheating?	Go to *Step 11*	Go to *Step 4*
4	Visually inspect the hoses, pipes and hose clamps. Are any of the hoses, clamps or pipes leaking?	Go to *Step 12*	Go to *Step 5*

Cabin Heater Coolant Heater System Loss of Coolant (cont'd)

Step	Action	Yes	No
5	Visually inspect the following components: • Coolant surge tank • Coolant pressure cap • Air separator • Radiators • Coolant pumps • Coolant valves • Heater Coolant Heater Are any of the listed components leaking?	Go to *Step 12*	Go to *Step 6*
6	1. Pressure test the heater coolant heater cooling system. Refer to *Cabin Heater Coolant Heater System Leak Testing on page 10-16*. 2. With the heater coolant heater cooling system pressurized, visually inspect the components listed in step 5. Are any leaks present?	Go to *Step 12*	Go to *Step 7*
7	Pressure test the coolant pressure cap. Refer to *Cabin Heater Coolant Heater System Pressure Cap Testing on page 10-15*. Does the coolant pressure cap hold pressure?	Go to *Step 9*	Go to *Step 8*
8	Replace the coolant pressure cap. Is the repair complete?	Go to *Step 13*	—
9	1. Pressure test the heater coolant heater cooling system. Refer to *Cabin Heater Coolant Heater System Leak Testing on page 10-16*. 2. With the cooling system pressurized, remove the heater coolant heater cooling system pressure cap. Does the heater coolant heater cooling system hold pressure?	—	Go to *Step 10*
10	Replace the surge tank. Refer to *Radiator Surge Tank Replacement (Reserve Energy Supply System Reservoir) on page 9-276* or *Radiator Surge Tank Replacement (Power Energy Reservoir) on page 9-277* or *Radiator Surge Tank Replacement (Heater Reservoir) on page 9-278*. Is the repair complete?	Go to *Step 13*	—
11	Repair the heater coolant heater cooling system overheating condition. Is the repair complete?	Go to *Step 13*	—
12	Repair or replace the leaking component. Refer to the appropriate repair. Is the repair complete?	Go to *Step 13*	—
13	Operate the system in order to verify the repair. **Note:** Do not use stop leak or any other chemicals. Only use premix Dexcool (50/50 mixture of Dexcool and deionized) Did you find and correct the condition?	System OK	Go to *Step 2*

Cabin Heater Coolant Heater System Pressure Cap Testing

Special Tools

- *GE-46143-2* Radiator Cap and Surge Tank Test Adapter
- *EN-24460-A* Cooling System Pressure Tester

For equivalent regional tools, Refer to *Fastener Tightening Specifications on page 9-199*.

Pressure Cap Testing

Warning: To avoid being burned, do not remove the radiator cap or surge tank cap while the engine is hot. The cooling system will release scalding fluid and steam under pressure if radiator cap or surge tank cap is removed while the engine and radiator are still hot.

1. Remove the pressure cap.
2. Wash the pressure cap sealing surface with water.

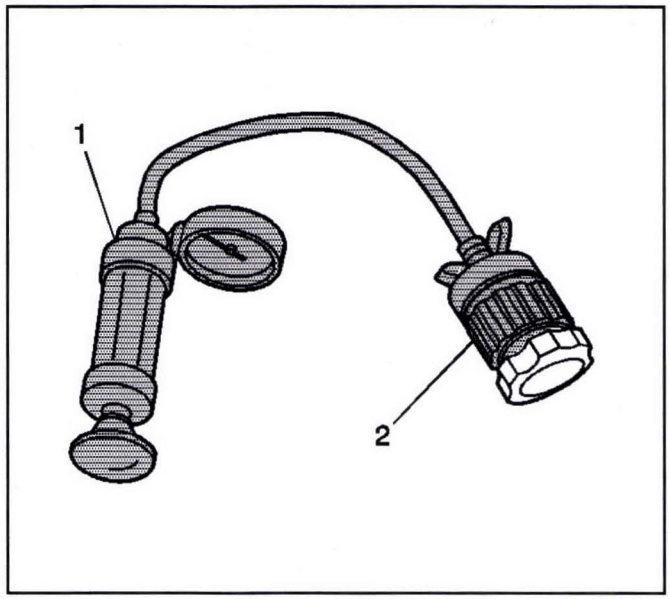

850101

Note: Lubricate *GE-46143-2* Radiator Cap and Surge Tank Test Adapter and pressure cap O-rings with coolant and press cap to seat O-ring on *GE-46143-2* Radiator Cap and Surge Tank Test Adapter before turning to engage threads.

3. Use the *EN-24460-A* Cooling System Pressure Tester (1) with *GE-46143-2* Radiator Cap and Surge Tank Test Adapter (2) in order to test the pressure cap.
4. Test the pressure cap for the following conditions:
   - Pressure release when the *EN-24460-A* Cooling System Pressure Tester exceeds the pressure rating of the pressure cap.
   - Maintain the rated pressure for at least 10 seconds.

   Note the rate of pressure loss.
5. Replace the pressure cap under the following conditions:
   - The pressure cap does not release pressure which exceeds the rated pressure of the cap.
   - The pressure cap does not hold the rated pressure.

Cabin Heater Coolant Heater System Leak Testing

Special Tools

- *EN-24460-A* Cooling System Pressure Tester
- *GE-46143-2* Radiator Cap and Surge Tank Test Adapter

For equivalent regional tools, Refer to *Fastener Tightening Specifications on page 9-199*.

Warning: Under pressure, the temperature of the solution in the radiator can be considerably higher, without boiling. Removing the radiator cap while the engine is hot (pressure is high), will cause the solution to boil instantaneously, with explosive force. The solution will spew out over the engine, fenders, and the person removing the cap. Serious bodily injury may result. Flammable antifreeze, such as alcohol, is not recommended for use at any time. Flammable antifreeze could cause a serious fire.

Warning: In order to help avoid being burned, do not remove the radiator cap while the engine and the radiator are hot. Scalding fluid and steam can be blown out under pressure if the cap is removed too soon.

1. Remove the pressure cap.
2. Test the operation of the pressure cap. Refer to *Cabin Heater Coolant Heater System Pressure Cap Testing on page 10-15*.
3. Wash the pressure cap mating surface with water.

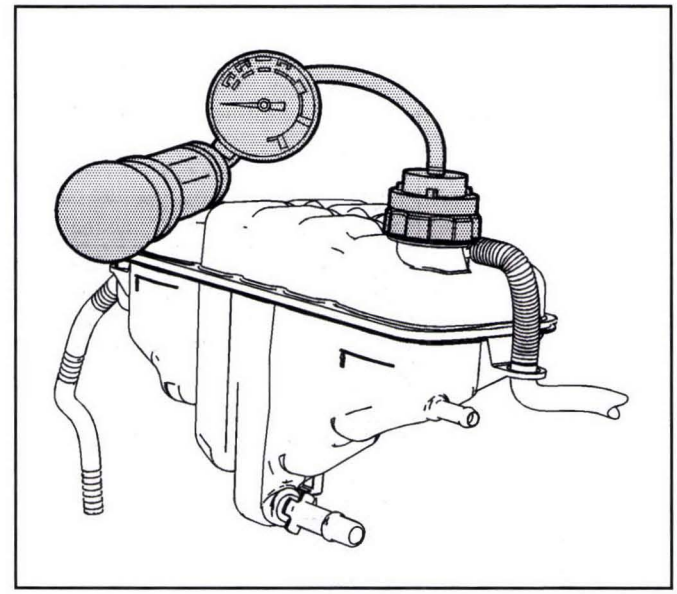

1992535

4. Use the *EN-24460-A* Cooling System Pressure Tester with the *GE-46143-2* Radiator Cap and Surge Tank Test Adapter in order to apply pressure to the cooling system.

   Do not exceed the pressure cap rating.
5. The cooling system should hold the rated pressure for at least 2 minutes.

   Observe the gauge for any pressure loss.

   Note: Do not use stop leak or any other chemicals. Only use premix Dexcool (50/50 mixture of Dexcool and deionized)
6. Repair any leaks as required.

Repair Instructions

Odor Correction

Eliminating Air Conditioning (A/C) Odor

Odors may be emitted from the air conditioning system primarily at start up in hot, humid climates. The following conditions may cause the odor:

- Debris is present in the HVAC module
- Microbial growth on the evaporator core

When the blower motor fan is turned on, the microbial growth may release an unpleasant musty odor into the passenger compartment. To remove odors of this type, the microbial growth must be eliminated. Perform the following procedure:

Deodorize the evaporator core using Deodorizing Aerosol Kit.

Perform the following steps in order to deodorize the A/C system:

1. Ensure that the plenum which draws outside air into the HVAC module is clear of debris.
2. Disable the air conditioning (A/C) compressor clutch operation by disconnecting the clutch coil electrical connector.
3. Dry the evaporator core by performing the following steps:
   3.1. Start the engine.
   3.2. Select the warmest temperature setting.
   3.3. Select the recirculation mode.
   3.4. Run the blower motor on high for 10 minutes.
4. Locate an area in the air conditioning duct between the blower motor and the evaporator core downstream of the blower motor.
5. Drill a 3.175 mm (0.125 in) hole where the hole will not interfere with or damage the following components:
   - The blower motor
   - The evaporator core
   - Any other operating part the of system
6. Wear safety goggles and latex gloves in order to perform the following actions:
   6.1. Select the maximum blower speed.
   6.2. Insert the deodorizer extension tube into the hole to the mark on the extension tube.
   6.3. Use short spray bursts and vary the direction of spray for a 2–3 minute period of time.
7. Shut the engine OFF. Allow the vehicle to sit for 3–5 minutes.
8. Seal the 3.175 mm (0.125 in) hole with body sealer or RTV gasket compound.
9. Start the engine.
10. Operate the blower motor on high for 15–20 minutes to dry.
11. Reconnect the A/C compressor clutch coil electrical connector.
12. Verify proper A/C clutch operation.

Refrigerant Recovery and Recharging

Special Tools

- *GE-45037* A/C Oil Injector
- *GE-50078* Electronic Leak Detector
- *GE-50300* R-1234yf Air Conditioning Refrigerant Recovery/Recharge Cart
- *GE-50957* Machine R-1234yf Contaminated Refrigerant
- *GE-50745* R-1234yf A/C POE Oil Injection Hose

For equivalent regional tools, *Special Tools on page 10-77*.

General Information

R-1234yf (HFO-1234yf) - 2,3,3,3 - Tetrafluoroprop-1-ene (CF3CFCH2), is an olefin containing hydrogen, fluorine and carbon with thermodynamic properties similar to R-134a. This refrigerant is a mildly flammable gas. It has a boiling point of −29.2°C, a vapor pressure of 583 kPa absolute at 20°C, no ozone depletion potential, and a global warming potential (GWP) of 4.

R-1234yf supply tank is white with red band to denote flammability.

Technicians repairing or servicing MVAC (motor vehicle air conditioning) must be trained and certified by an EPA approved organization. Certification is obtained by passing an EPA approved examination. (http://www.epa.gov/ozone/title6/609/technicians/609certs.html)

MVAC service shops must certify to the EPA that they have acquired and are properly using approved refrigerant recovery equipment. Service shops must also verify (with on site documentation) that each person using the equipment has been properly trained and certified. MVAC service shops must maintain records of the names and addresses of facilities to which the refrigerant they recover is sent. (http://www.epa.gov/ozone/title6/609/technicians/appequip.html)

Warning: Refer to R-1234yf Proper Service Procedures Warning on page 0-5.

Vehicles equipped with R-1234yf refrigerant systems have unique low and high side service fittings.

The proper handling procedures should be followed for all refrigerants as designated by the refrigerant manufacturer's Material Safety Data Sheet (MSDS).

Refrigerant Recovery and Recharging

To remove, recycle and install R-1234yf from/to a vehicles refrigerant system only use *GE-50300* R-1234yf Air Conditioning Refrigerant Recovery/Recharge Cart or refrigerant recovery recharge equipment certified to meet the requirements of SAE J2843 and approved by the EPA. (http://www.epa.gov/ozone/title6/609/technicians/appequip.html)

To remove contaminated refrigerant from a vehicles refrigerant system use *GE-50957* Machine R-1234yf Contaminated Refrigerant or only service equipment designed for contaminated refrigerant removal and certified to meet the requirements of SAE J2851.

Refrigerant recovered by this equipment cannot be reused or recycled on site and must be sent to an EPA approved reclamation facility for reprocessing or disposal. (http://www.epa.gov/ozone/title6/608/reclamation/reclist.html)

To prevent accidental release of refrigerant and minimize safety concerns, the installation of any refrigerant service equipment to the vehicle shall only be done with the engine off and after the refrigerant high side pressure has been reduced (approximately 2–3 minutes).

Open the windows and/or doors before charging the vehicle to prevent an accumulation of refrigerant in case of a major refrigerant leak.

Warning: R-1234yf is heavier than air and may accumulate in low or pit areas – make sure these areas are properly ventilated. Failure to follow this precaution may cause personal injury.

Refrigerant service equipment is required to ensure adequate refrigerant recovery to reduce emissions and provide for accurate recharging of mobile air conditioning systems. Venting refrigerant to the atmosphere is illegal per US Environmental Protection Agency (EPA) Clean Air Act Section 608.

Warning: To prevent personal injury, avoid breathing any refrigerant vapor and lubricant mist. Servicing of R-1234yf systems shall only be done in well ventilated work areas. To remove R-1234yf refrigerant from the A/C refrigerant system, recover using SAE J2843 certified equipment. Un-controlled release of R-1234yf refrigerant in the work area may result in high concentrations of R-1234yf that can be flammable. If an accidental system discharge occurs, ventilate the work area before continuing service. Failure to follow these precautions may cause personal injury and/or damage to the vehicle or its components.

Warning: For personal protection, goggles and lint-free gloves should be worn and a clean cloth wrapped around fittings, valves, and connections when doing work that includes opening the refrigerant system. If refrigerant comes in contact with any part of the body severe frostbite and personal injury can result. The exposed area should be flushed immediately with cold water and prompt medical help should be obtained.

Caution: Use only the refrigerant and the charge amount specified in "Refrigerant System Specifications" found in HVAC Service Manual or the vehicles under hood refrigerant label. Use of incorrect refrigerant or charge amounts may result in poor system performance and premature system failure.

Caution: Use only the lubricant specified for this vehicles refrigerant system. Do not mix refrigerant oils which may result in system contamination and unknown reaction by-products which may cause HVAC System failure.

To protect the refrigerant supply *GE-50300* R-1234yf Air Conditioning Refrigerant Recovery/Recharge Cart or SAE J2843 equipment requires the refrigerant to be analyzed for purity prior to its recovery or transfer. The equipment is required to receive an acceptable reading from the integrated refrigerant identifier prior to recovery or transfer. An acceptable reading is ≥ 98% -1/+2 R-1234yf.

If an unacceptable reading is received (and the presence of foreign gases detected) the refrigerant is considered contaminated and the equipment will not allow its recovery or transfer to an onboard storage vessel. If refrigerant is contaminated use *GE-50957* Machine R-1234yf Contaminated Refrigerant or SAE J2851 compliant equipment to recover for reclamation and/or disposal at an EPA approved facility (http://www.epa.gov/ozone/title6/608/reclamation/reclist.html).

As a safety precaution *GE-50300* R-1234yf Air Conditioning Refrigerant Recovery/Recharge Cart or SAE J2843 compliant equipment requires the MAC system to pass a pre-charge leak test (to detect the possibility of a gross system leak prior to charging, >0.3 g/s) prior to allowing the MAC system to be charged. The pressurized portion of this test will require the technician set the vehicles HVAC blower motor on high, A/C switch off and air distribution mode set to floor. The technician shall insert a *GE-50078* Electronic Leak Detector or J2913-compliant electronic leak detector, set to low sensitivity (14 grams/year leak rate) into the center of a floor duct outlet, as far as possible. When the technician confirms that the vehicle is set up for the pressurized leak check the *GE-50300* R-1234yf Air Conditioning Refrigerant Recovery/Recharge Cart will install 15% of the programmed charge into the vehicles refrigerant system. The technician monitors the electronic leak detector for 5 minutes or until the detector alarms.

The equipments display will then ask the following:

1. Was this test performed? If the technician replies Yes, the display next shall ask,
2. Was a leak found? If technician replies Yes, the machine shall only allow recovery and evacuation to allow repair. If the technician replies No, the display shall continue with,
3. Is there an auxiliary evaporator? If the technician replies No the machine shall permit completion of the recharge process. If the technician replies Yes, the display shall instruct the technician to perform a leak check with *GE-50078* Electronic Leak Detector or a J2913-compliant detector at a rear evaporator outlet, then ask,
4. Was an auxiliary evaporator leak check performed? If the technician replies Yes, the display will continue with Was a leak found? and if the answer is Yes, the machine shall only allow recovery and evacuation to allow repair. If the technician replies No, the machine shall permit completion of the recharge process.

A/C Refrigerant System Oil Charge Replenishing

If oil was removed from the A/C system during the recovery process or due to component replacement, the oil must be replenished. Oil can be injected into a charged system using *GE-45037* injector with *GE-50745* R-1234yf A/C POE Oil Injection Hose . For the proper quantities of oil to add to the A/C refrigerant system, *Approximate Fluid Capacities on page 10-3*.

Flushing (R-1234yf)

Special Tools

- *GE-45268* A/C Flushing Adapter Kit
- *GE-45268-130* 1234yf Refrigerant Adapters
- *GE-50078* Enhanced Leak Detector
- *GE-50300* Air Conditioning Service Center for HFO1234yf

For equivalent regional tools, refer to *Special Tools on page 10-77*.

General Information

R-1234yf (HFO-1234yf) - 2,3,3,3 - Tetrafluoroprop-1-ene (CF3CFCH2), is an olefin containing hydrogen, fluorine and carbon with thermodynamic properties similar to R-134a. This refrigerant is a mildly flammable gas. It has a boiling point of −29.2°C, a vapor pressure of 583 kPa absolute at 20°C, no ozone depletion potential, and a global warming potential (GWP) of 4.

Technicians repairing or servicing motor vehicle air conditioning (MVAC) must be trained and certified by an EPA approved organization. Certification is obtained by passing an EPA approved examination. (http://www.epa.gov/ozone/title6/609/technicians/609certs.html)

Warning: Refer to R-1234yf Proper Service Procedures Warning on page 0-5.

Note: Flushing is not intended to remove metal from the A/C system.

Flushing is intended to remove the following:

- Contaminated A/C Compressor oil
- Desiccant, following a desiccant bag failure
- Overcharge of A/C Compressor oil
- Refrigerant contamination

Note: Warmer engine or ambient temperatures decreases the refrigerant recovery time during the A/C flush procedure.

Forward Flushing Setup

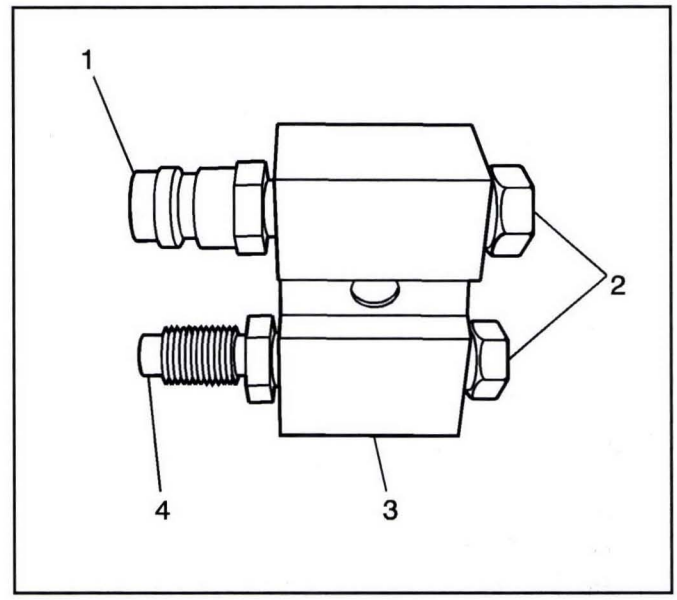

1162447

Note: Forward flow refrigerant flushing is recommended for contaminated refrigerant or PAG oil.

Note: Inspect and lubricate the *GE-45268* A/C Flushing Adapter Kit fitting O-rings. Refer to *Air Conditioning O-Ring Seal Replacement on page 10-30*.

1. Install both GE-45268-9 (2) onto the GE-45268-10 (3).
2. Install the GE-45268-7 (4) onto the suction side of the GE-45268-10 (3).
3. Install the GE-45268-129 (1) onto the discharge side of the GE-45268-10 (3).

Reverse Flushing Setup

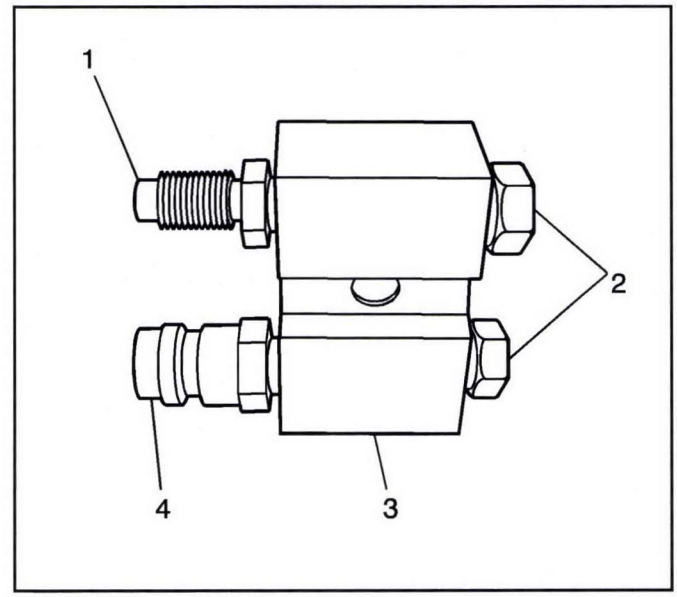

1211671

Note: Reverse flow refrigerant flush is recommended for desiccant bag failure. Replace the condenser/receiver dehydrator assembly when the A/C flush is complete and perform the following procedure:

Note: Inspect and lubricate the *GE-45268* A/C Flushing Adapter Kit fitting O-rings. Refer to *Air Conditioning O-Ring Seal Replacement on page 10-30*.

1. Install both GE-45268-9 (2) onto the GE-45268-10 (3).
2. Install the GE-45268-129 (4) onto the suction side of the GE-45268-10 (3).
3. Install the GE-45268-7 (1) onto the discharge side of the GE-45268-10 (3).

Flush Procedure

Note: Warmer engine or ambient temperatures decreases the refrigerant recovery time during the A/C flush procedure.

1. Recover the refrigerant. Refer to *Refrigerant Recovery and Recharging on page 10-17*.
2. Remove the thermal expansion valve (TXV). Refer to *Air Conditioning Evaporator Thermal Expansion Valve Replacement on page 10-40*.
3. Install the TXV stud onto the GE-45268-115 adapter.
4. Install new sealing washers onto the evaporator core. Refer to *Air Conditioning System Seal Replacement on page 10-29*.
5. Install GE-45268-115 in place of the TXV.

Caution: Refer to *Fastener Caution on page 0-8*.

6. Install TXV mounting bolts and tighten to **5 N•m (44 lb in)**.
7. Install new washers onto the liquid line and suction hose. Refer to *Air Conditioning System Seal Replacement on page 10-29*.
8. Connect the liquid line and suction hose to the GE-45268-115.
9. Install the TXV block fitting nut and tighten to **22 N•m (16 lb ft)**.
10. Remove the A/C compressor. Refer to *Air Conditioning Compressor Replacement on page 10-26*.

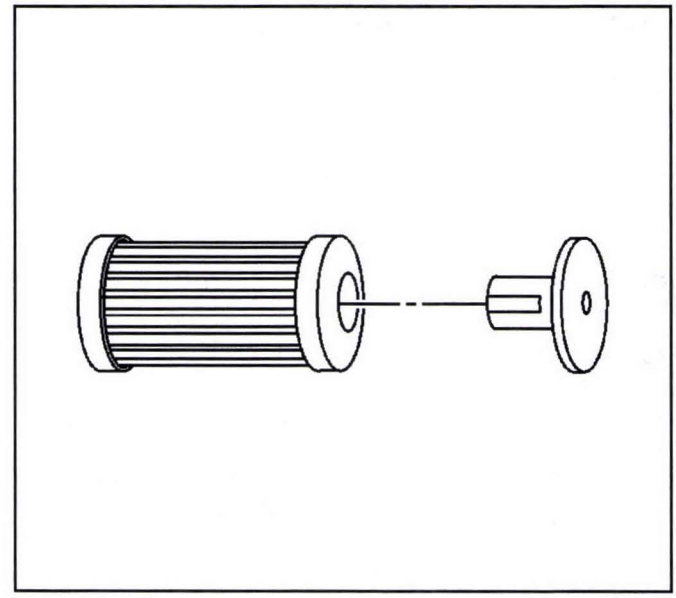

787687

Note: The filter inside GE-45268-1 is serviceable. Remove and discard the check valve from the filter.

11. Service the filter before each flush.

    Note: Install new sealing washers onto the compressor hose assembly. Refer to *Air Conditioning System Seal Replacement on page 10-29*.

Assure that the suction and discharge ports on the GE-45268-10 correspond to the suction and discharge ports on the compressor hose assembly.

12. Install the GE-45268-10 to the A/C compressor to condenser hose assembly.
13. Install fitting GE-45268-128 to the filter cylinder end of GE-45268-1.
14. Connect GE-45268-1 filter to GE-45268-7 adapter.

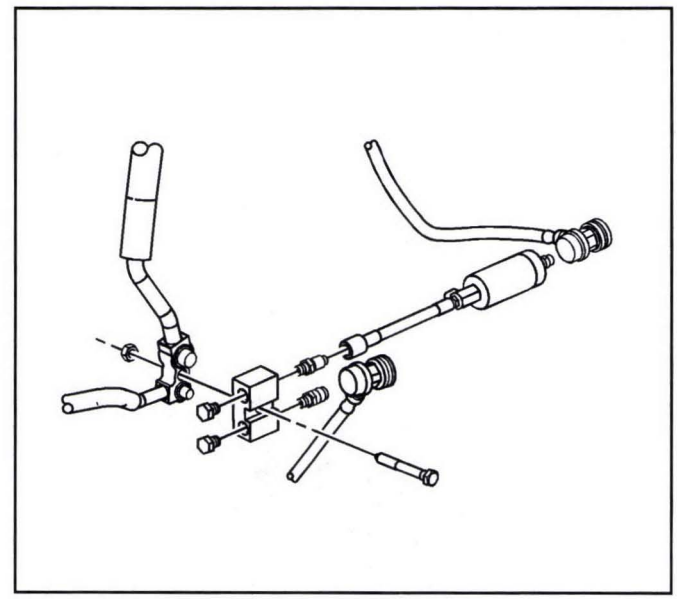

1348182

15. Connect the blue hose from the *GE-50300* Air Conditioning Service Center to GE-45268-1 flush filter adapter.

16. Connect the red hose from the *GE-50300* Air Conditioning Service Center to fitting GE-45268-129.

    Note: Close the valve on the external refrigerant tank, before starting the flush process.

17. Flush the A/C system. Follow the instructions supplied with the *GE-50300* Air Conditioning Service Center.
18. Disconnect the red hose from the *GE-50300* Air Conditioning Service Center from fitting GE-45268-129.
19. Disconnect the blue hose from the *GE-50300* Air Conditioning Service Center to GE-45268-1 flush filter adapter.
20. Disconnect the GE-45268-1 flush filter from the GE-45268-10 flush adapter.
21. Remove the GE-45268-10 from the A/C compressor hose assembly.

    Note: Flushing will remove all the PAG oil from the A/C system.

The A/C system must be replenished with the correct amount of PAG oil.

22. If you will reinstall the removed A/C compressor, perform the following procedure:
    22.1. Remove the A/C compressor drain plug.
    22.2. Drain the PAG oil from the A/C compressor. Rotate the compressor input shaft to assist in draining the PAG oil from the compressor.
    22.3. Install the A/C compressor drain plug and tighten to **30 N•m (22 lb ft)**.
    22.4. Add the total system capacity of PAG oil to the A/C compressor. Refer to *Approximate Fluid Capacities on page 10-3*.
23. If you will replace the A/C compressor after flushing the system, perform the following procedure:
    23.1. Deduct 41 ml (1.4 oz), which is the amount of PAG oil shipped with the service compressor, from the amount of PAG oil listed in the capacities table. Refer to *Approximate Fluid Capacities on page 10-3*.
    23.2. Add the calculated amount to the compressor, as needed.

    Note: Flushing will remove fluorescent leak detection dye from A/C system.

24. Add one bottle of A/C Tracer Dye directly to the A/C Compressor.
25. Install the A/C compressor. Refer to *Air Conditioning Compressor Replacement on page 10-26*.
26. Remove the TXV block fitting nut.
27. Disconnect the liquid line and suction hose from the GE-45268-115.
28. Remove the TXV bolts retaining the GE-45268-115.
29. Remove the GE-45268-115.
30. Inspect the TXV for debris. Clean or replace as needed.
31. Install the TXV. Refer to *Air Conditioning Evaporator Thermal Expansion Valve Replacement on page 10-40*.
32. Evacuate and recharge the A/C system. Refer to *Refrigerant Recovery and Recharging on page 10-17*.
33. Leak test the fittings using *GE-50078* Enhanced Leak Detector.

Heater Coolant Heater Draining and Filling

Special Tools

- *GE-26568* Coolant and Battery Tester
- *GE-46143–2* Cooling System Adapter
- *GE-47716* Vac-N-Fill Coolant Refill Tool

For equivalent regional tools, refer to *Special Tools on page 9-344*.

Danger: Before conducting any repair to this high voltage cooling system, it is necessary to determine/verify whether no high-voltage system faults exist. If high-voltage faults exist, follow published DTC diagnostics/repair procedures prior to performing any cooling system repairs. Failure to correct High Voltage Faults before working on the high voltage cooling system could result in personal injury or death.

Danger: Do not use a service jack in locations other than those specified to lift this vehicle. Lifting the vehicle with a jack in those other locations could cause the vehicle to slip off the jack and roll; this could cause injury or death.

Warning: To avoid being burned, do not remove the radiator cap or surge tank cap while the engine is hot. The cooling system will release scalding fluid and steam under pressure if radiator cap or surge tank cap is removed while the engine and radiator are still hot.

Draining Procedure

Note: Draining of the cooling system or replacement of any cabin heater coolant heater system parts requires the actuation of the Hybrid/EV Battery Pack Coolant Pump Bleed Procedure in the GDS tool.

1. Turn vehicle power OFF and remove all keyless entry transmitters from the vehicle and secure in a place outside the vehicle.
2. Remove the radiator surge tank cap.
3. Raise and support the vehicle. Refer to *Lifting and Jacking the Vehicle on page 1-27*.
4. Place a drain pan under the vehicle.
5. Remove the front compartment air deflector. Refer to *Front Compartment Air Deflector Replacement on page 3-125*.
6. Remove the right front wheelhouse liner. Refer to *Front Wheelhouse Liner Replacement - Right Side on page 3-138*.
7. Remove the auxiliary heater inlet hose from the heater coolant pump. Refer to *Auxiliary Heater Inlet Hose Replacement on page 10-51*.

Vac-N-Fill Procedure

1. Install the auxiliary heater inlet hose to the heater coolant pump. Refer to *Auxiliary Heater Inlet Hose Replacement on page 10-51*.
2. Install the right front wheelhouse liner . Refer to *Front Wheelhouse Liner Replacement - Right Side on page 3-138*.
3. Install the front compartment air deflector. Refer to *Front Compartment Air Deflector Replacement on page 3-125*.
4. Turn vehicle power OFF and remove all keyless entry transmitters from the vehicle and secure in a place outside the vehicle.

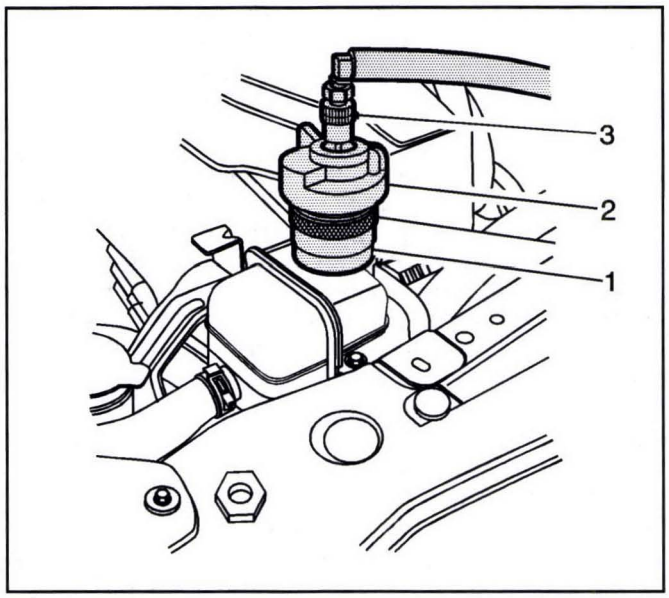

3242381

Note: To prevent boiling of the coolant/water mixture in the vehicles cooling system, do not apply vacuum to a cooling system above 49°C (120°F). The tool will not operate properly when the coolant is boiling.

5. Install *GE-46143-2* adapter (1).
6. Attach the Van-N-Fill cap (2) to *GE-46143-2* adapter (1).
7. Attach the vacuum gauge assembly (3) to the Vac-N-Fill cap (2).

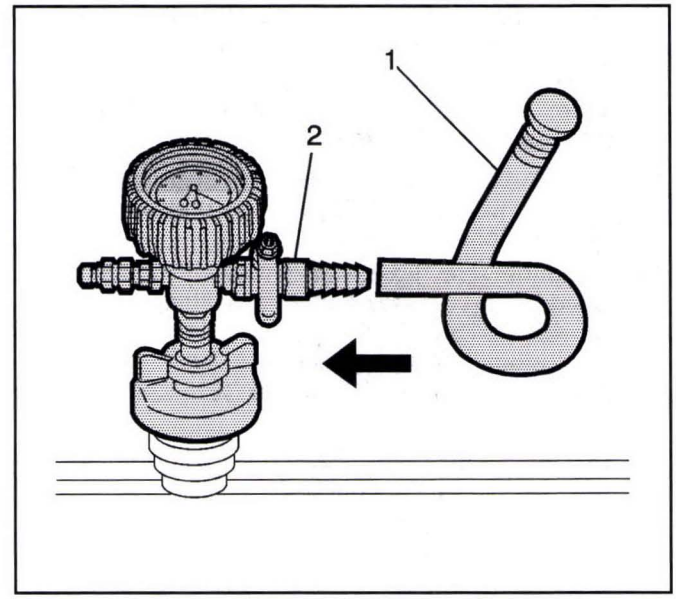

2846166

8. Attach the fill hose (1) to the barb fitting on the vacuum gauge assembly.
   Ensure that the valve is closed.

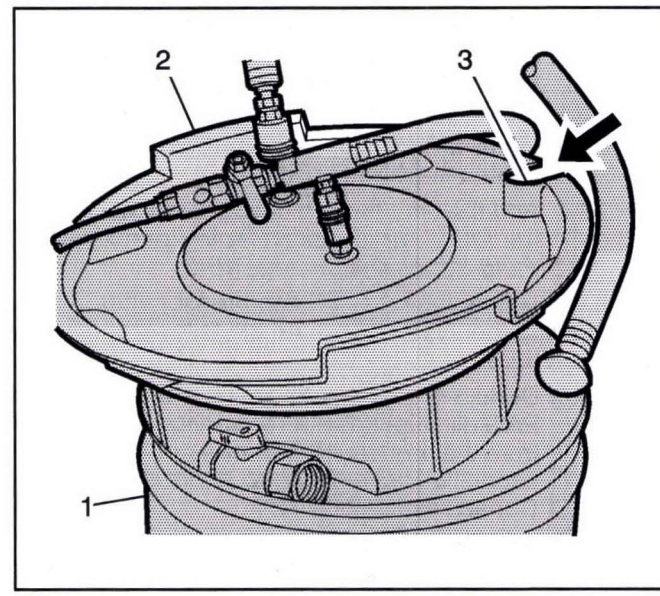

2846170

Note: Use a Pre-mixed DEXCOOL® (50/50 mixture of DEXCOOL® and deionized water). Always use more coolant than necessary. This will eliminate air from being drawn into the cooling system.

9. Pour the coolant mixture into the graduated reservoir (1).
10. Place the fill hose in the graduated reservoir (1).
    Note: Prior to installing the vacuum tank onto the graduated reservoir, ensure that the drain valve located on the bottom of the tank is closed.
11. Install the vacuum tank (2) on the graduated reservoir with the fill hose routed through the cut-out area (3) in the vacuum tank.

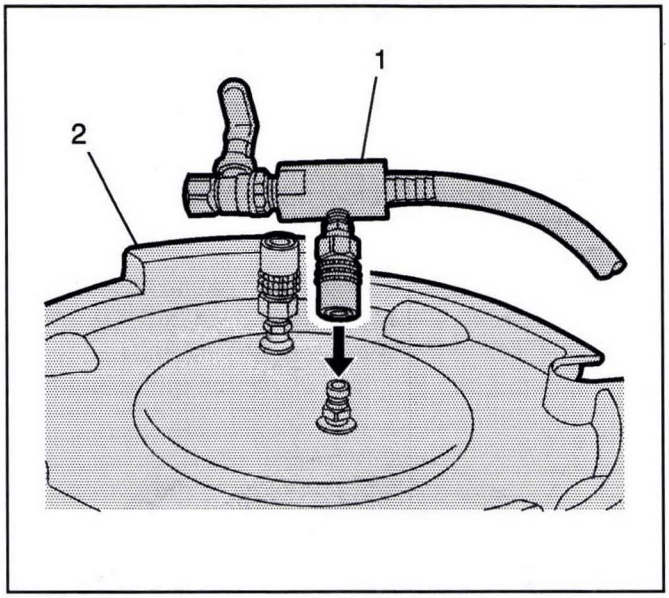

2846171

12. Attach the venturi assembly (1) to the vacuum tank (2).

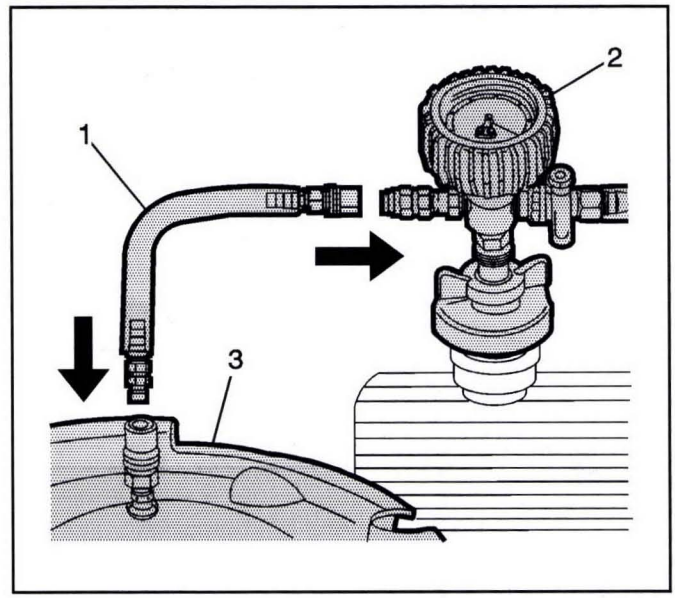

2846173

14. Attach the vacuum hose (1) to the vacuum gauge assembly (2) and the vacuum tank (3).

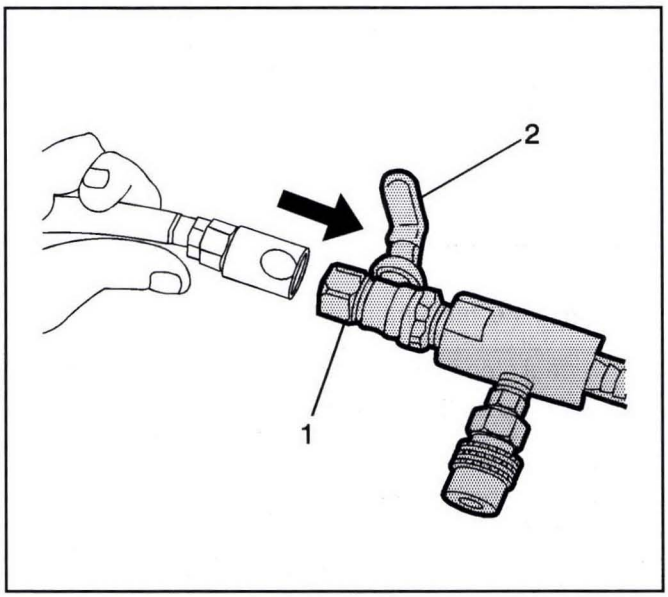

2846172

13. Attach a shop air hose to the venturi assembly (1). Ensure the valve (2) on the venturi assembly is closed.

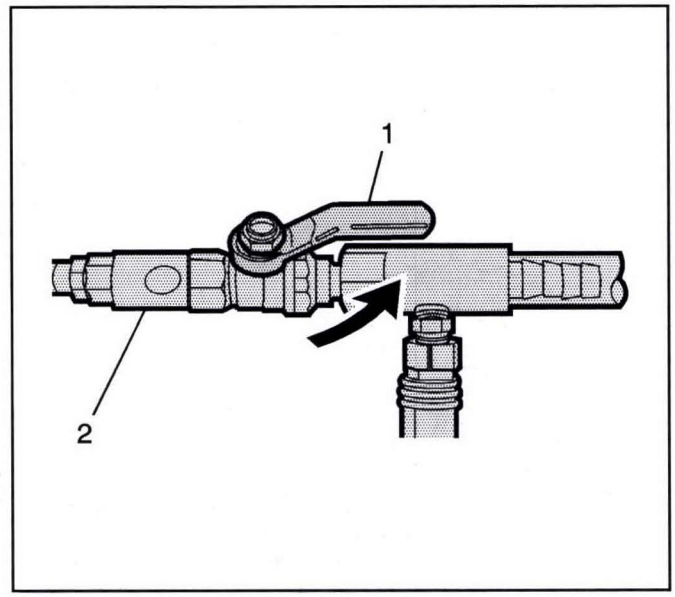

2846175

15. Open the valve (1) on the venturi assembly (2). The vacuum gauge will begin to rise and a hissing noise will be present.

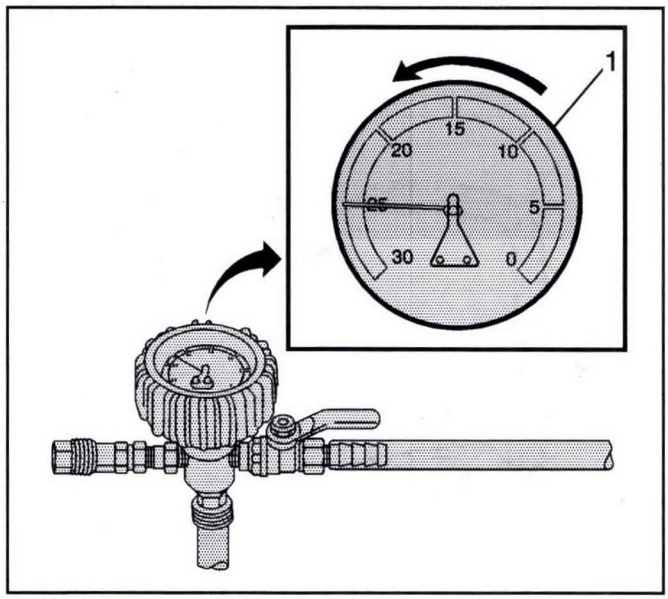

2846177

16. Continue to draw vacuum until the needle stops rising (1). This should be 610–660 mm Hg (24–26 in Hg).

    Cooling hoses may start to collapse. This is normal due to vacuum draw.
17. To aid in the fill process, position the graduated reservoir above the coolant fill port.

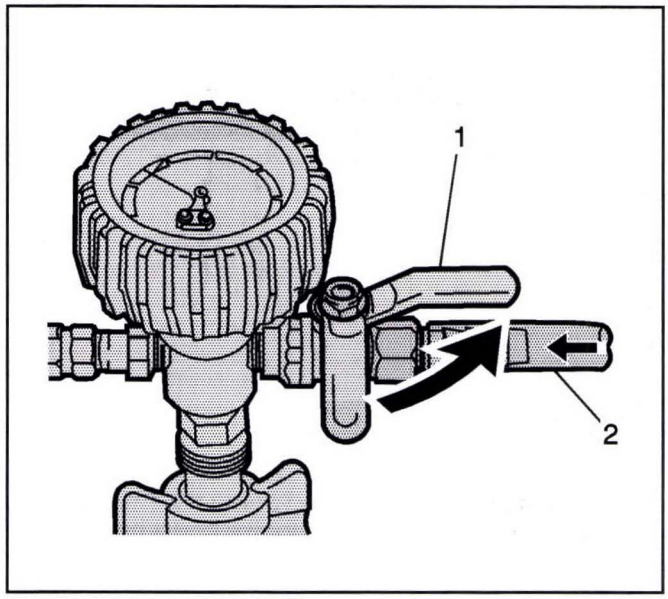

2846183

18. Slowly open the valve (1) on the vacuum gauge assembly (2). When the coolant reaches the top of the fill hose, close the valve. This will eliminate air from the fill hose.
19. Close the valve on the venturi assembly.
20. If there is a suspected leak in the cooling system, allow the system to stabilize under vacuum and monitor for vacuum loss.

    If vacuum loss is observed, refer to *Hybrid Cooling System Loss of Coolant (Drive Motor Battery Cooling System) on page 9-253* or *Hybrid Cooling System Loss of Coolant (Drive Motor Generator Power Inverter Module Cooling System) on page 9-254*.
21. Open the valve on the vacuum gauge assembly. The vacuum gauge will drop as coolant is drawn into the system.

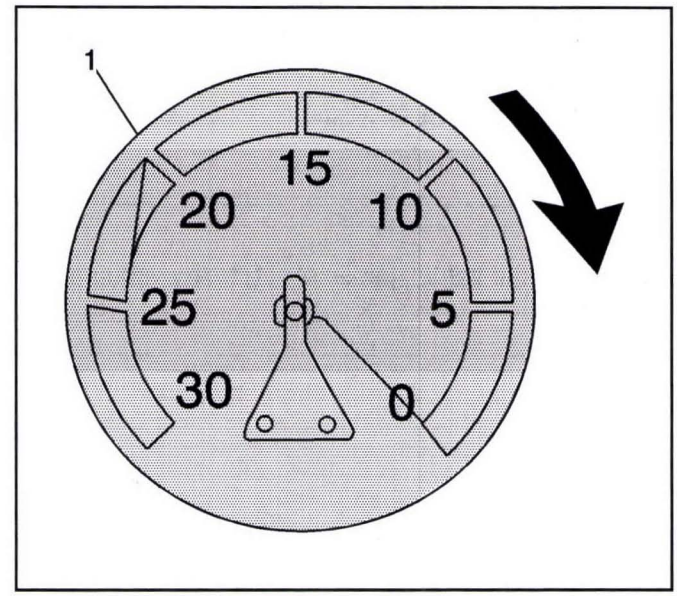

3242386

22. Once the vacuum gauge (1) reaches zero, close the valve on the vacuum gauge assembly and repeat steps 15–21.
23. Ensure that the vehicle is in service mode. Refer to *Power Mode Description and Operation on page 11-958*.
24. Detach the Vac-N-Fill cap from the *GE-46143-2* adapter.
25. Remove *GE-46143-2* adapter from the surge tank fill neck.

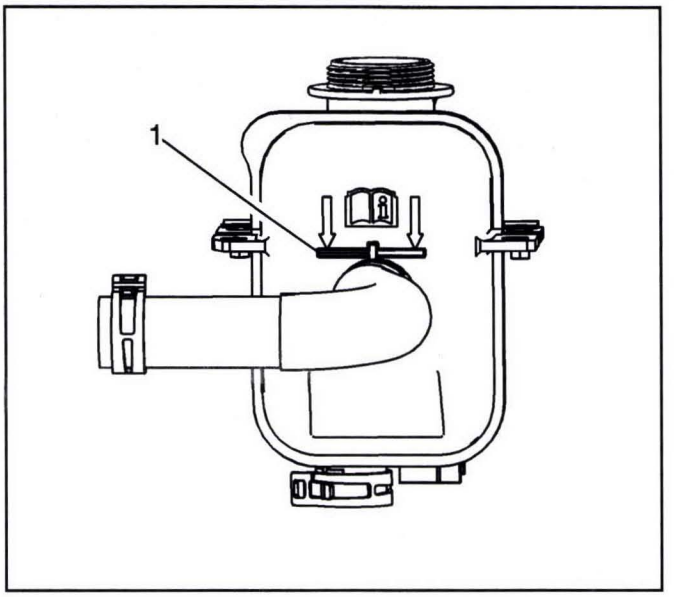

3242379

26. Upon completion of the hybrid/EV battery pack coolant pump bleed procedure, adjust the surge tank coolant level to a position just above the seam (1).
27. Inspect the concentration of the coolant mixture using *GE-26568* tester.

REMOVING EXCESS COOLANT FROM SYSTEM

Note: After filling the cooling system, the extraction hose can be used to remove excess coolant to achieve the proper coolant level.

1. Detach the vacuum hose from the vacuum gauge assembly.

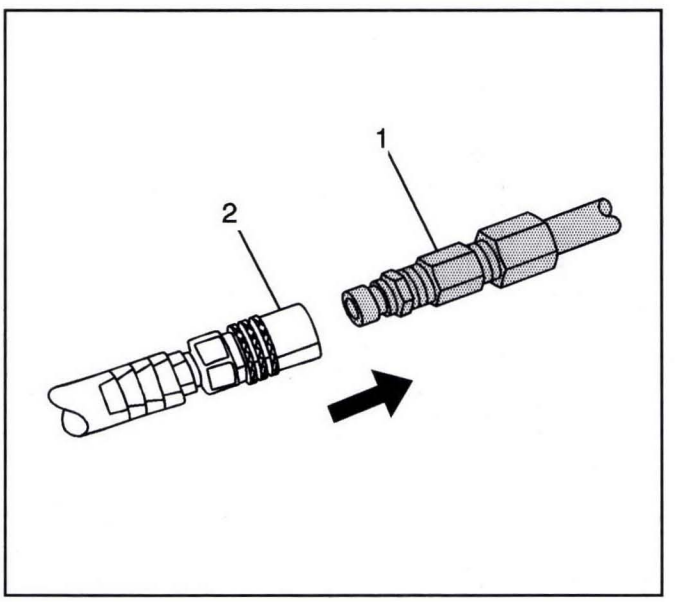

2857825

2. Attach the extraction hose (1) to the vacuum hose (2).

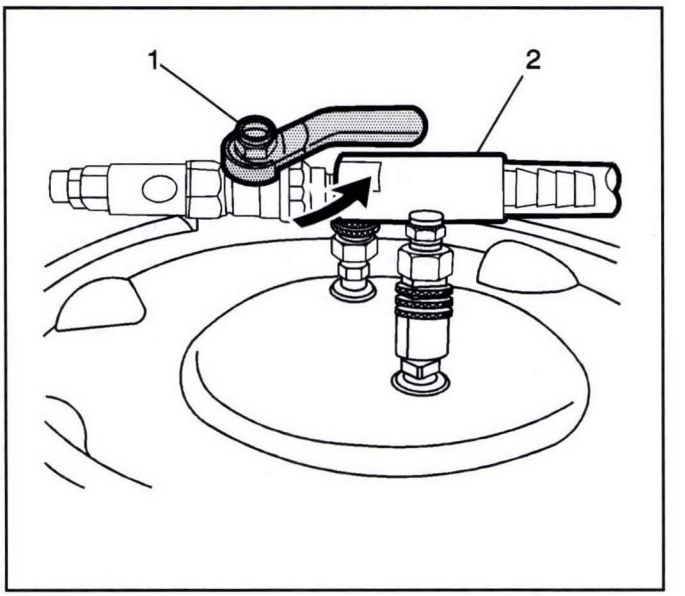

2857827

3. Open the valve (1) on the venturi assembly (2) to start a vacuum draw.

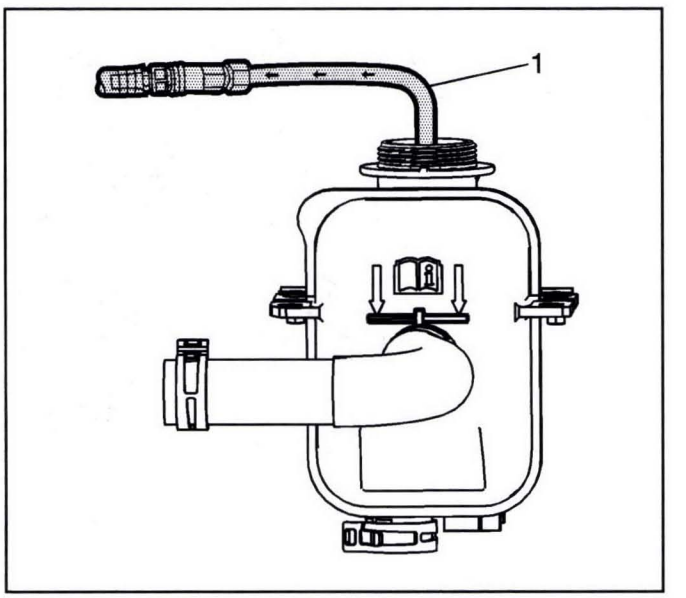

3242387

4. Assemble the extraction hose (1) and insert into the surge tank.

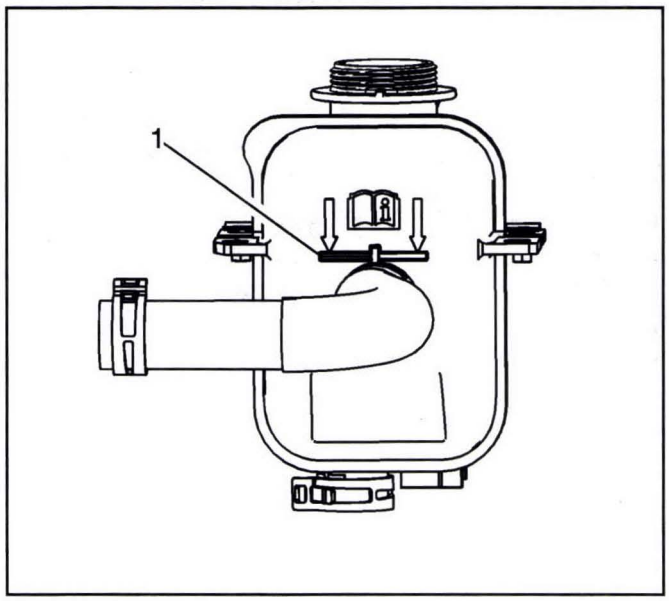

3242379

5. Adjust the surge tank coolant level to a position just above the seam (1).
6. The vacuum tank has a drain valve on the bottom of the tank. Open the valve to drain coolant from the vacuum tank into a suitable container for disposal.

Air Conditioning Compressor Replacement

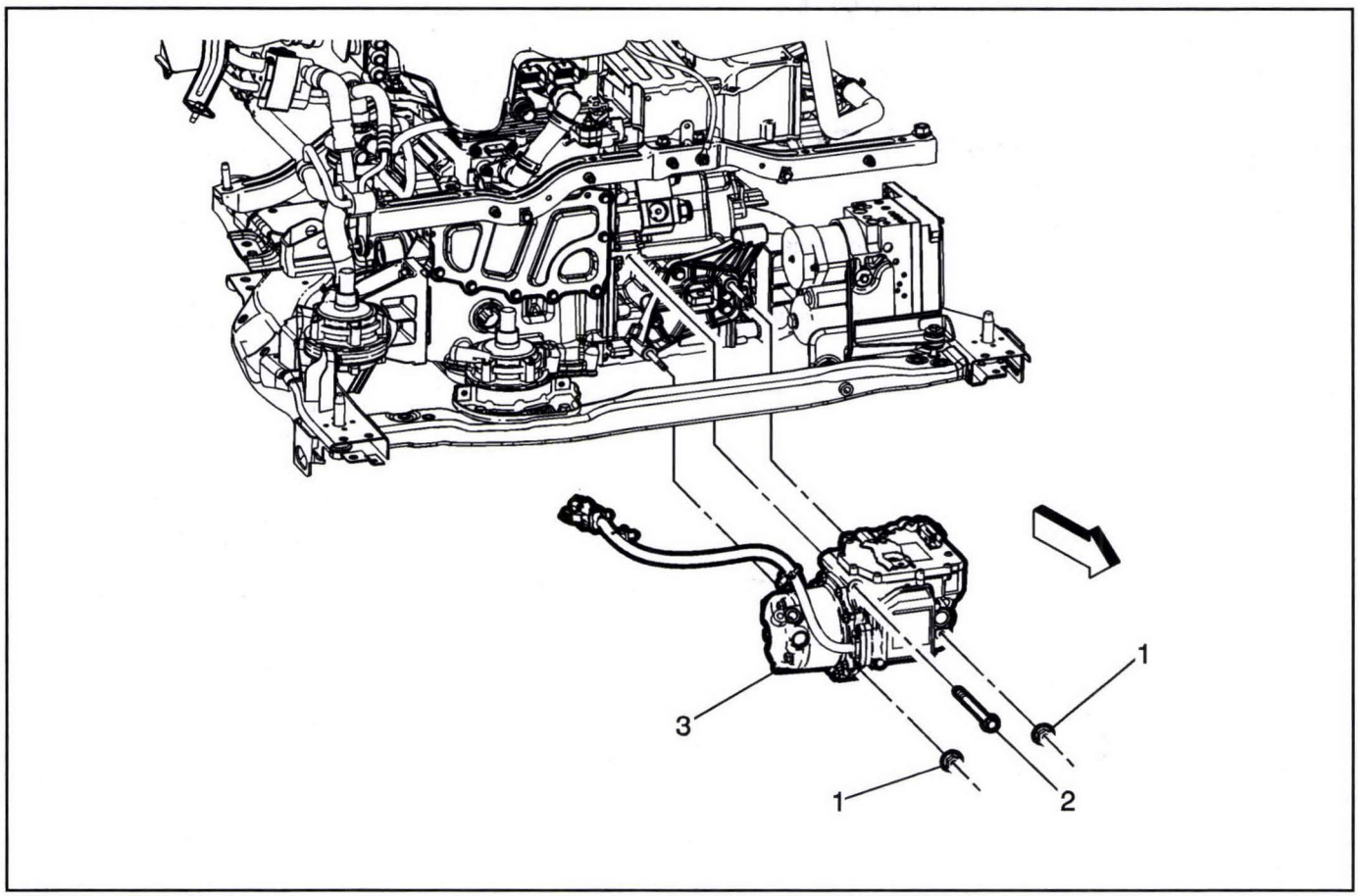

3229897

Air Conditioning Compressor Replacement

Callout	Component Name
Danger: Always perform the High Voltage Disabling procedure prior to servicing any High Voltage component or connection. Personal Protection Equipment (PPE) and proper procedures must be followed. ***The High Voltage Disabling procedure will perform the following tasks:*** • ***Identify how to disable high voltage.*** • ***Identify how to test for the presence of high voltage.*** • ***Identify condition under which high voltage is always present and personal protection equipment (PPE) and proper procedures must be followed.*** ***Failure to follow the procedures exactly as written may result in serious injury or death.*** **Caution:** This A/C system's high voltage A/C Compressor uses Polyolester (POE) refrigerant oil instead of Polyalkylene Glycol (PAG) refrigerant oil. Use only approved GM POE oil no more than two hours after removal from its sealed moisture proof packaging (reference GM POE label for proper usage) in refrigerant systems equipped with a High Voltage A/C compressor. GM POE oil is intended to be used with the GE-45037-A A/C oil injector and the GE-48997 A/C POE oil injector hose. Use of any refrigerant oil other than the approved GM POE, handled and installed per GM's requirements may result in compressor failure and/or loss of HV isolation with associated DTC's set. **Preliminary Procedure** 1. Disable the hybrid high voltage system. *High Voltage Disabling on page 9-363* and *High Voltage Enabling on page 9-367* 2. Recover the refrigerant. *Refrigerant Recovery and Recharging on page 10-17* 3. Remove the air conditioning compressor and condenser hose from the air conditioning compressor. *Air Conditioning Compressor and Condenser Hose Replacement on page 10-32* 4. Remove the air conditioning compressor hose from the air conditioning compressor. *Air Conditioning Compressor Hose Replacement on page 10-31* 5. Remove the drive motor generator control module coolant pump and reposition out of the way. *Drive Motor Generator Control Module Coolant Pump Replacement on page 9-291* 6. Disconnect the air conditioning compressor electrical connector.	
1	Air Conditioning Compressor Nut (Qty: 2) **Caution:** *Fastener Caution on page 0-8* **Tighten** 23 N•m (17 lb ft)
2	Air Conditioning Compressor Bolt **Tighten** 23 N•m (17 lb ft)
3	Air Conditioning Compressor **Procedure** **Note:** Remove the air conditioning compressor through the space made by repositioning the drive motor generator control module coolant pump out of the way. 1. A/C compressor oil balancing is not required. The service A/C compressor contains enough oil; however, add any oil that was removed during the A/C system recovery process. *Approximate Fluid Capacities on page 10-3* 2. If replacing the A/C compressor, it is necessary to program the replacement A/C compressor. *Air Conditioning Compressor Control Module Programming and Setup on page 6-5*

Air Conditioning Compressor Bracket Replacement

Removal Procedure

Danger: Before conducting any repair to this high voltage cooling system, it is necessary to determine/verify whether no high-voltage system faults exist. If high-voltage faults exist, follow published DTC diagnostics/repair procedures prior to performing any cooling system repairs. Failure to correct High Voltage Faults before working on the high voltage cooling system could result in personal injury or death.

1. Remove the front compartment air deflector. Refer to *Front Compartment Air Deflector Replacement on page 3-125*.

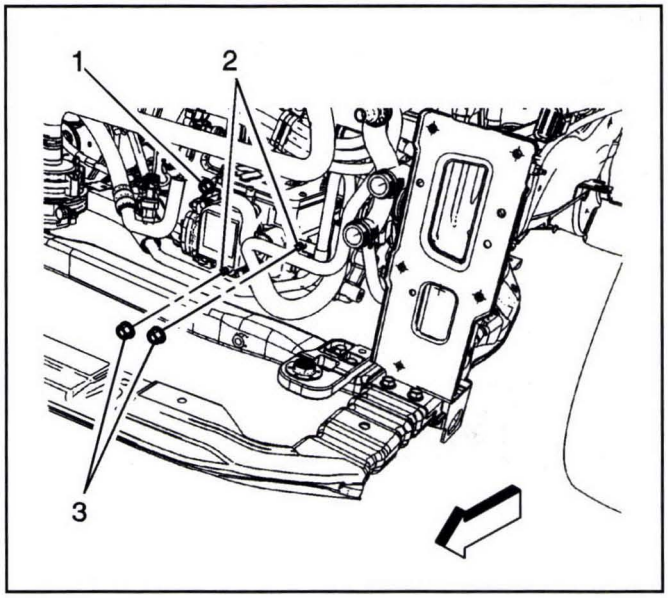

3357003

2. Remove the air conditioning compressor bolt (1) from the drive unit.
3. Remove the air conditioning compressor nuts (2) from the air conditioning compressor bracket studs (3).
4. Remove the air conditioning compressor bracket studs (3) from the drive unit.

Caution: Ensure the air conditioning compressor is supported by a table or work area sturdy enough to handle the weight. Do not use the hoses to support the compressor. Using the compressor hoses to bear the weight of the compressor may damage the air conditioning compressor/hoses and in turn may cause a refrigerant leak. The hoses are not designed to support the weight of the air conditioning compressor.

5. Reposition the air conditioning compressor out of the way to gain access to the air conditioning compressor bracket.

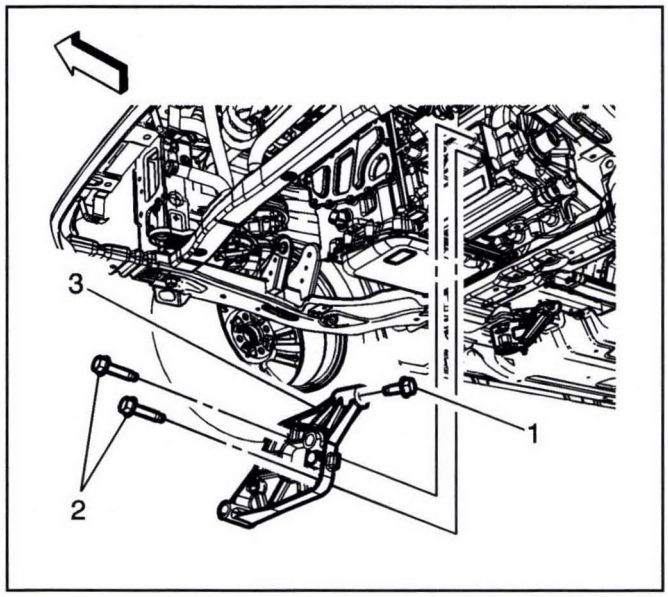

3357011

6. Remove the transmission fluid cooler inlet pipe bolt (1) from the air conditioning compressor bracket. Refer to *Transmission Fluid Cooler Inlet Pipe Replacement on page 16-119*.
7. Remove the air conditioning compressor bracket bolts (2) from the drive unit.
8. Remove the air conditioning compressor bracket (3) from the vehicle.

Installation Procedure

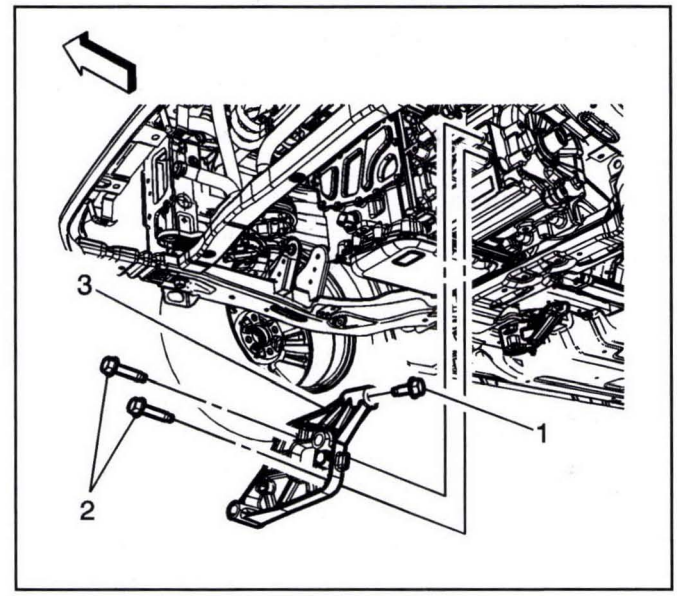

3357011

1. Install the air conditioning compressor bracket (3) to the vehicle.

Caution: Refer to *Fastener Caution on page 0-8*.

2. Install the air conditioning compressor bracket bolts (2) to the drive unit and tighten to **22 N•m (16 lb ft)**
3. Install the transmission fluid cooler inlet pipe bolt (1) to the air conditioning compressor bracket (3). Refer to *Transmission Fluid Cooler Inlet Pipe Replacement on page 16-119*.

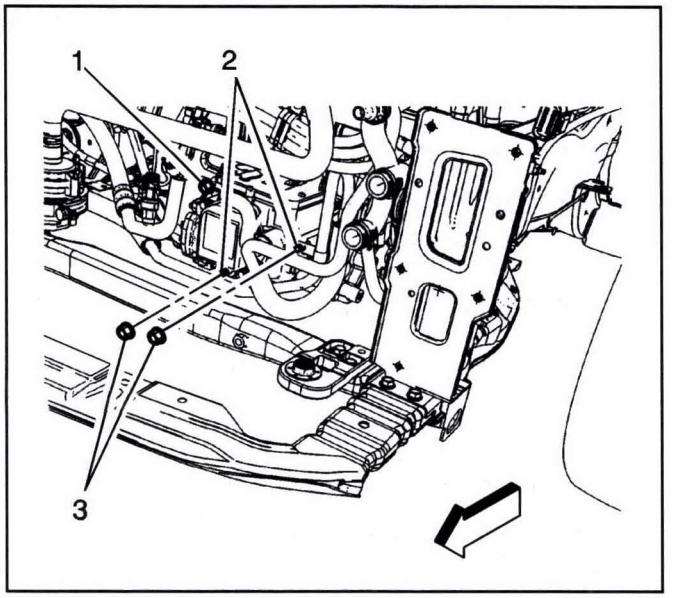

3357003

4. Position the air conditioning compressor on the air conditioning compressor bracket.
5. Install the air conditioning compressor bracket studs (3) to the drive unit and tighten to **10** N•m **(89 lb in)**.
6. Install the air conditioning compressor nuts (2) to the air conditioning compressor bracket studs (3) and tighten to **23** N•m **(17 lb ft)**
7. Install the air conditioning compressor stud (1) to the drive unit and tighten to **23** N•m **(17 lb ft)**
8. Install the front compartment air deflector. Refer to *Front Compartment Air Deflector Replacement on page 3-125*.

Air Conditioning System Seal Replacement

Removal Procedure

1. Disassemble the A/C refrigerant components. Refer to the appropriate repair procedure.

   Note: Cap or tape the open A/C refrigerant components immediately to prevent system contamination.

2. Cap or tape the A/C refrigerant components.

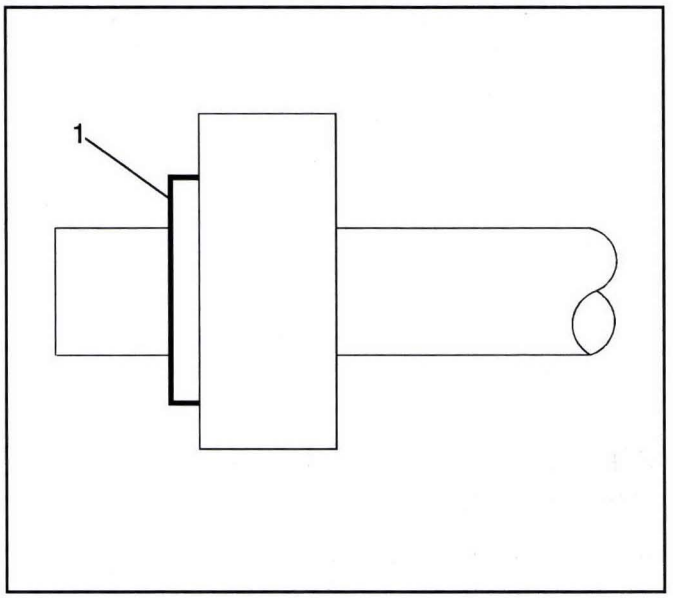

2611419

3. Remove the sealing washer (1) from the A/C refrigerant component.
4. Inspect the seal washer for signs of damage to help determine the root cause of the failure.
5. Inspect the A/C refrigerant components for damage or burrs. Repair if necessary.

   Note: DO NOT reuse sealing washer.

6. DISCARD the sealing washer.

Installation Procedure

Note: Flat washer type seals do not require lubrication.

1. Inspect the new sealing washer for any signs of cracks, cuts, or damage.

   Do not use a damaged sealing washer.

2. Remove the cap or tape from the A/C refrigerant components.

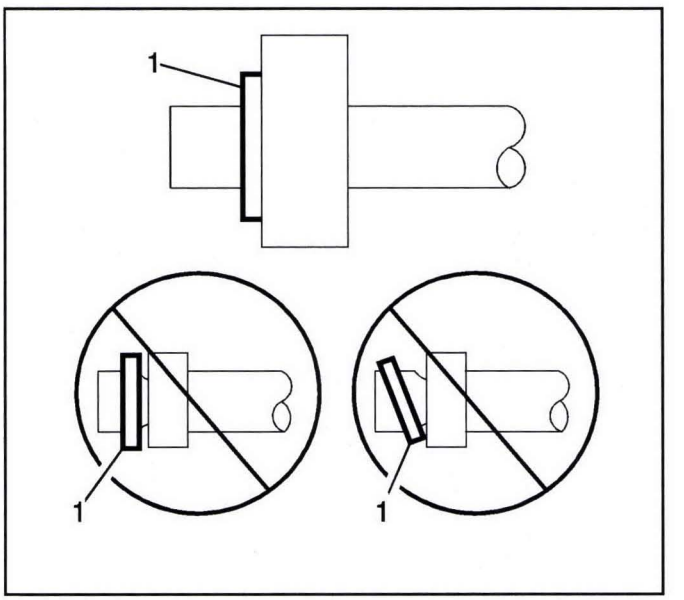

662315

3. Using a lint-free clean, dry cloth, clean the sealing surfaces of the A/C refrigerant components.
4. Carefully install the NEW sealing washer (1) onto the A/C refrigerant component.

   The sealing washer (1) must completely bottom against the surface of the fitting.

   Note: After tightening the A/C components, there should be a slight sealing gap of approximately 1.2 mm (3/64 in) between the A/C line and the A/C component.
5. Assemble the remaining A/C refrigerant components. Refer to the appropriate repair procedure.

Air Conditioning O-Ring Seal Replacement

Removal Procedure

1. Disassemble the A/C refrigerant components. Refer to the appropriate repair procedure

   Note: Cap or tape the open A/C refrigerant components immediately to prevent system contamination.
2. Cap or tape the A/C refrigerant components.

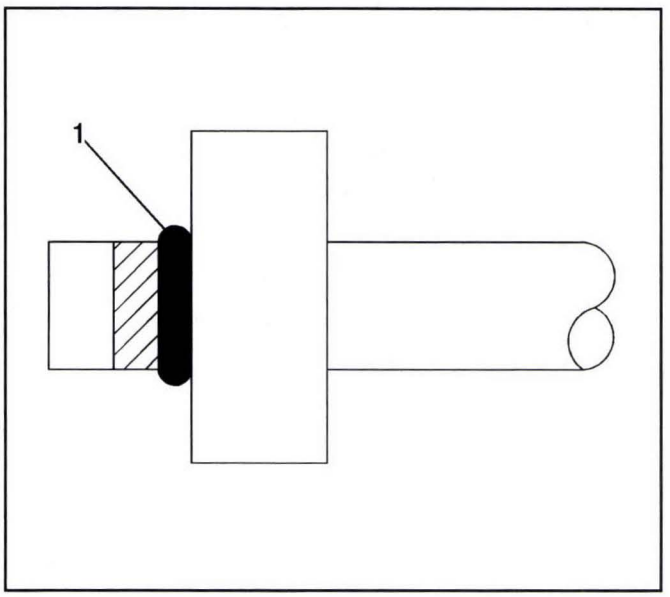

2611417

3. Remove the O-ring seal (1) from the A/C refrigerant component.
4. Inspect the O-ring seal for signs of damage to help determine the root cause of the failure.
5. Inspect the A/C refrigerant components for damage or burrs. Repair if necessary.
6. DISCARD the O-ring seal.

Installation Procedure

1. Inspect the new O-ring seal for any sign of cracks, cuts, or damage.
2. Remove the cap or tape from the A/C refrigerant components.
3. Using a lint-free clean, dry cloth, carefully clean the sealing surfaces of the A/C refrigerant components.

   Note: Use only the recommended refrigerant oil or damage to the A/C system could occur.
4. Lightly coat the new O-ring seal with the recommended refrigerant oil. *Adhesives, Fluids, Lubricants, and Sealers on page 10-4*

   Note: DO NOT reuse O-ring seals.
5. Carefully slide the NEW O-ring seal (1) onto the A/C refrigerant component.

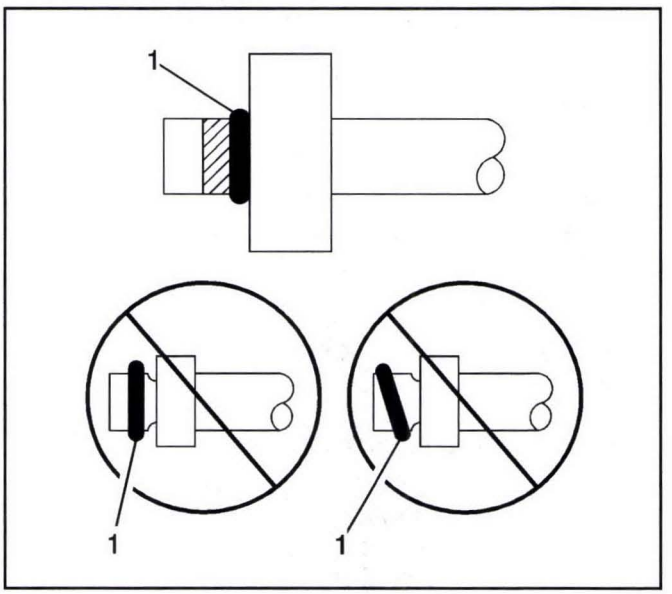

818438

6. The O-ring seal (1) must be fully seated.
7. Assemble the A/C components.

   Refer to the appropriate repair procedure.

Air Conditioning Compressor Hose Replacement

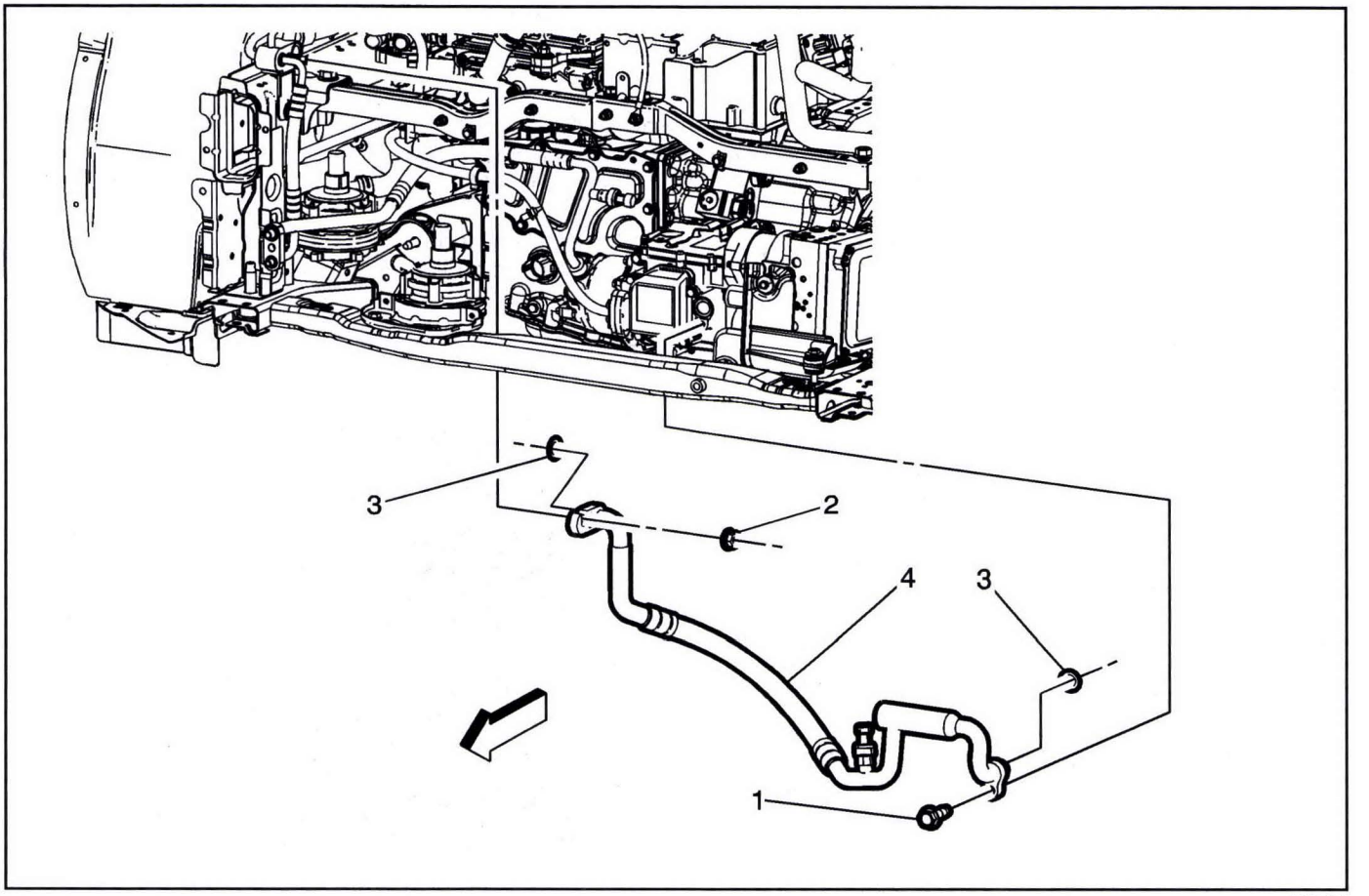

3229970

Air Conditioning Compressor Hose Replacement

Callout	Component Name
Danger: Before conducting any repair to this high voltage cooling system, it is necessary to determine/verify whether no high-voltage system faults exist. If high-voltage faults exist, follow published DTC diagnostics/repair procedures prior to performing any cooling system repairs. Failure to correct High Voltage Faults before working on the high voltage cooling system could result in personal injury or death.	
	Preliminary Procedure 1. Turn vehicle power OFF and remove all keyless entry transmitters from the vehicle and secure in a place outside the vehicle. 2. Recover the refrigerant. Refer to *Refrigerant Recovery and Recharging on page 10-17*. 3. Remove the front compartment air deflector. Refer to *Front Compartment Air Deflector Replacement on page 3-125*. 4. Remove the Radiator Surge Tank Clamp Bracket Replacement (Right Side). Refer to *Radiator Surge Tank Clamp Bracket Replacement (Right Side) on page 9-279* or *Radiator Surge Tank Clamp Bracket Replacement (Left Side) on page 9-280*. 5. Disconnect the electrical connector from the air conditioning (A/C) refrigerant pressure sensor.
1	Air Conditioning Compressor Hose Bolt **Caution:** Refer to *Fastener Caution on page 0-8*. **Tighten** 22 N•m (16 lb ft)
2	Air Conditioning Compressor Hose Nut **Tighten** 22 N•m (16 lb ft)
3	Air Conditioning Sealing Washer (Qty: 2) **Procedure** Remove and discard the old sealing washers and replace with NEW sealing washers.

Air Conditioning Compressor Hose Replacement (cont'd)

Callout	Component Name
4	Air Conditioning Compressor Hose **Procedure** 1. Remove the wiring harness connected to the air conditioning compressor hose. 2. If replacing the air conditioning compressor hose transfer the low side air conditioning refrigerant pressure sensor. Refer to *Air Conditioning Refrigerant Pressure Sensor Replacement - Low Pressure on page 10-41*.

Air Conditioning Compressor and Condenser Hose Replacement

Removal Procedure

Danger: Before conducting any repair to this high voltage cooling system, it is necessary to determine/verify whether no high-voltage system faults exist. If high-voltage faults exist, follow published DTC diagnostics/repair procedures prior to performing any cooling system repairs. Failure to correct High Voltage Faults before working on the high voltage cooling system could result in personal injury or death.

1. Turn vehicle power OFF and remove all keyless entry transmitters from the vehicle and secure in a place outside the vehicle.
2. Recover the refrigerant. Refer to *Refrigerant Recovery and Recharging on page 10-17*.
3. Remove the front compartment air deflector. Refer to *Front Compartment Air Deflector Replacement on page 3-125*.
4. Disconnect the electrical connector from the air conditioning (A/C) refrigerant pressure sensor.

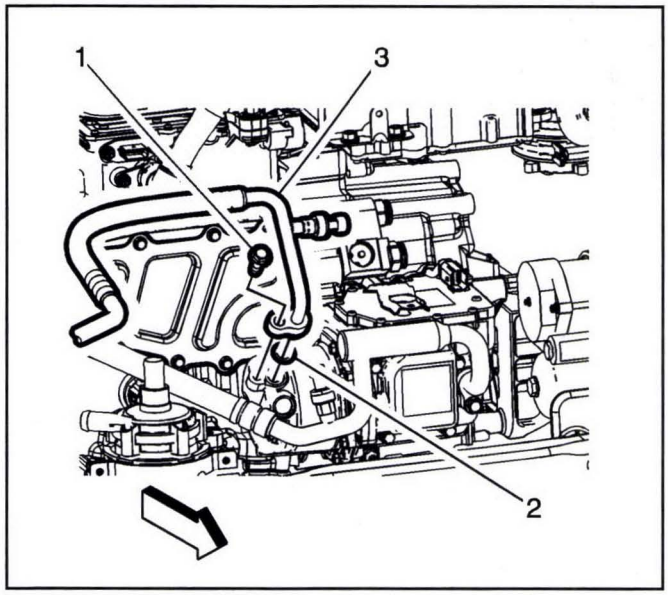

3229982

5. Remove the air conditioning compressor and condenser hose bolt (1) from the air conditioning compressor.
6. Remove the air conditioning compressor and condenser hose (3) from the air conditioning compressor.
7. Remove and discard the old sealing washer (2) from the air conditioning compressor and condenser hose.

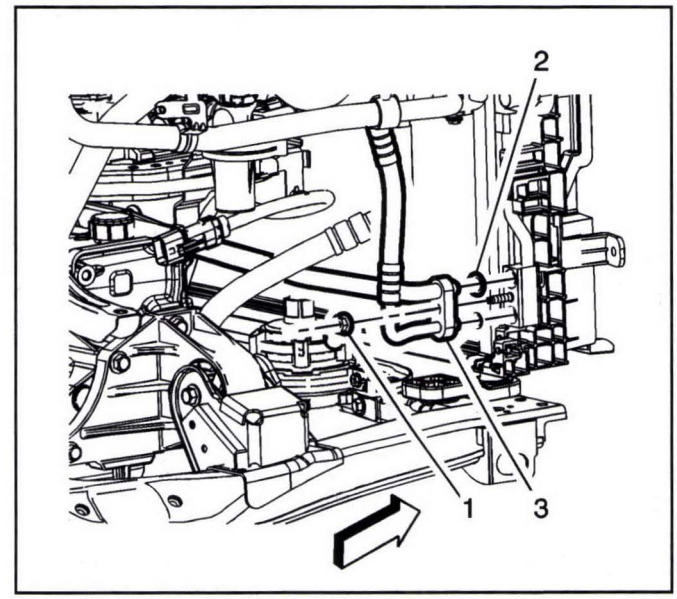

3229984

8. Remove the air conditioning compressor and condenser hose nut (1) from the air conditioning condenser.
9. Remove the air conditioning compressor and condenser hose (3) from the air conditioning condenser.
10. Remove and discard the old sealing washers (2) from the air conditioning compressor and condenser hose.

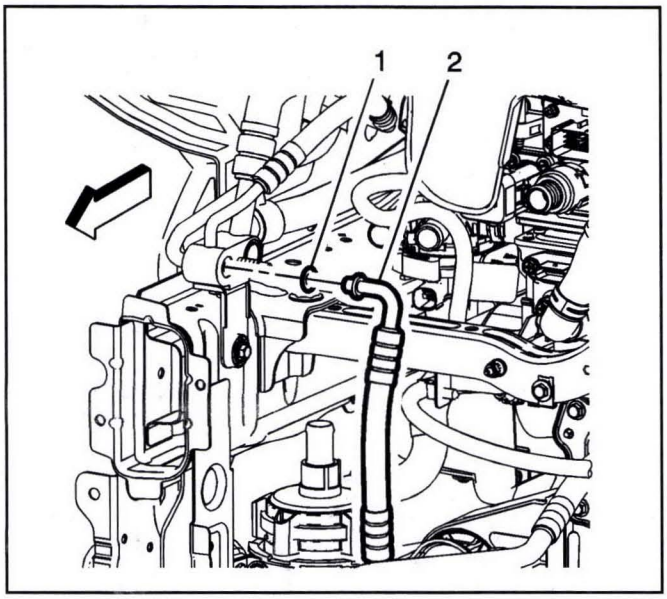

3229985

11. Remove the air conditioning compressor hose from the air conditioning evaporator hose assembly. Refer to *Air Conditioning Compressor Hose Replacement on page 10-31*.
12. Remove the air conditioning compressor and condenser hose (2) from the air conditioning evaporator hose assembly.
13. Remove and discard the old sealing washers (1) from the air conditioning compressor and condenser hose.
14. Remove the drive motor battery coolant pump. Refer to *Drive Motor Battery Coolant Pump Replacement on page 9-315*.
15. Remove air conditioning compressor and condenser hose from the retainers.

Installation Procedure

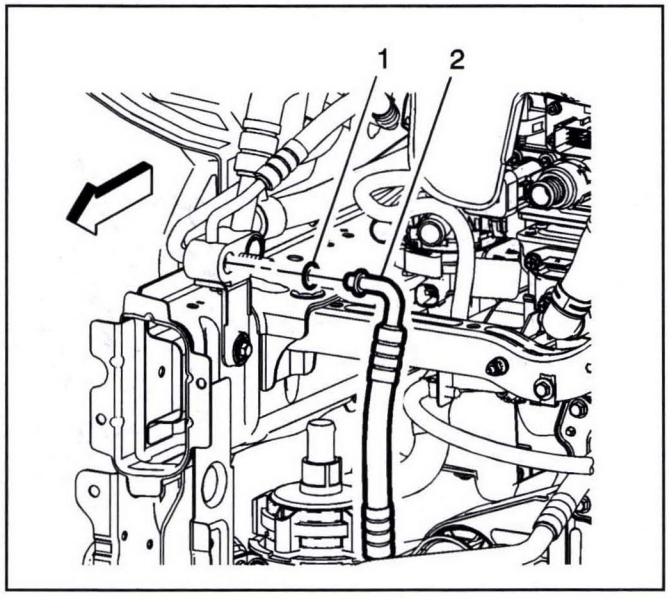

3229985

1. Install NEW sealing washers (1) to the air conditioning compressor and condenser hose. Refer to *Air Conditioning System Seal Replacement on page 10-29*.
2. Install the air conditioning compressor and condenser hose (2) to the vehicle.
3. Install the drive motor battery coolant pump. Refer to *Drive Motor Battery Coolant Pump Replacement on page 9-315*.
4. Install the air conditioning compressor and condenser hose (2) to the air conditioning evaporator hose assembly.
5. Install the air conditioning compressor hose to the air conditioning evaporator hose assembly. Refer to *Air Conditioning Compressor Hose Replacement on page 10-31*.
6. Install the air conditioning compressor hose to the retainers.

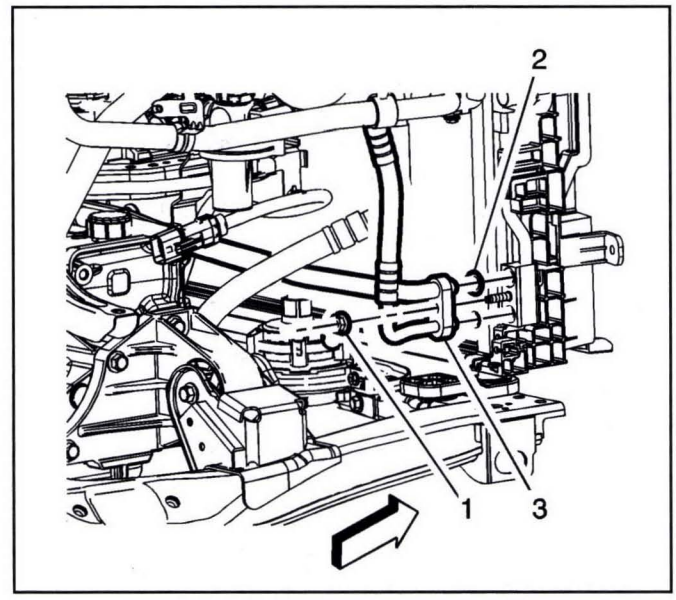

3229984

7. Install NEW sealing washers (2) to the air conditioning compressor and condenser hose. Refer to *Air Conditioning System Seal Replacement on page 10-29*.
8. Install the air conditioning compressor and condenser hose (3) to the air conditioning condenser.

Caution: Refer to *Fastener Caution on page 0-8*.

9. Install the air conditioning compressor and condenser hose nut (1) to the air conditioning condenser and tighten to **22** N•m **(16 lb ft)**.

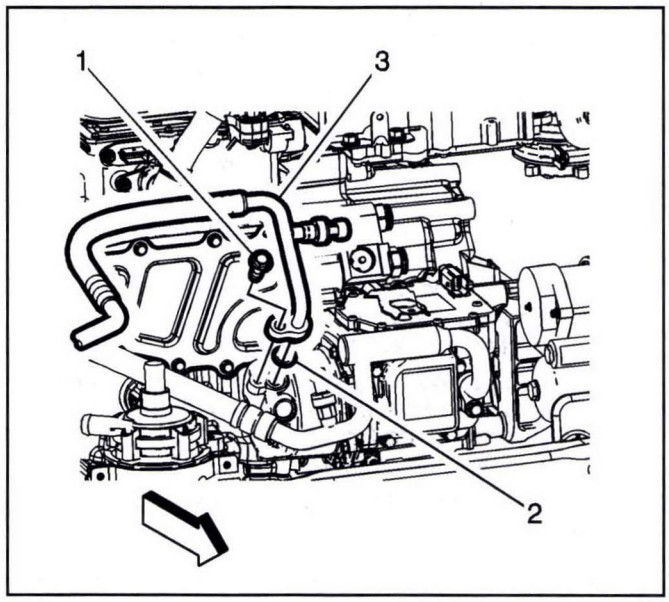

3229982

10. Install NEW sealing washer (2) to the air conditioning compressor and condenser hose. Refer to *Air Conditioning System Seal Replacement on page 10-29*.
11. Install the air conditioning compressor and condenser hose (3) to the air conditioning compressor.
12. Install the air conditioning compressor and condenser hose bolt (1) to the air conditioning compressor and tighten to **22** N•m **(16 lb ft)**.
13. Connect the electrical connector to the air conditioning (A/C) refrigerant pressure sensor.
14. Install the front compartment air deflector. Refer to *Front Compartment Air Deflector Replacement on page 3-125*.
15. Evacuate and charge the refrigerant system. Refer to *Refrigerant Recovery and Recharging on page 10-17*.

Air Conditioning Evaporator Hose Assembly Replacement

Removal Procedure

Danger: Before conducting any repair to this high voltage cooling system, it is necessary to determine/verify whether no high-voltage system faults exist. If high-voltage faults exist, follow published DTC diagnostics/repair procedures prior to performing any cooling system repairs. Failure to correct High Voltage Faults before working on the high voltage cooling system could result in personal injury or death.

1. Turn vehicle power OFF and remove all keyless entry transmitters from the vehicle and secure in a place outside the vehicle.
2. Remove the front compartment sight shield. Refer to *Front Compartment Front Sight Shield Replacement on page 3-39*.
3. Remove the high voltage disconnect circuit connector cover. Refer to *High Voltage Disconnect Circuit Connector Cover Replacement on page 9-174*.
4. Recover the refrigerant. Refer to *Refrigerant Recovery and Recharging on page 10-17*.

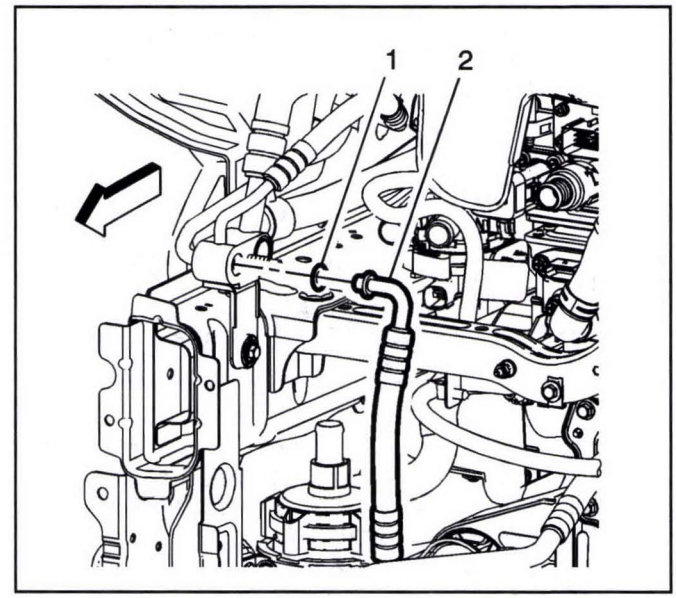

3229985

5. Remove the radiator surge tank clamp bracket replacement (right side). Refer to *Radiator Surge Tank Clamp Bracket Replacement (Right Side) on page 9-279* or *Radiator Surge Tank Clamp Bracket Replacement (Left Side) on page 9-280*.
6. Disconnect the air conditioning compressor hose and the air conditioning compressor and condenser hose (2) from the air conditioning evaporator hose. Refer to *Air Conditioning Compressor and Condenser Hose Replacement on page 10-32*.
7. Remove the electrical connector from the air conditioning evaporator hose.

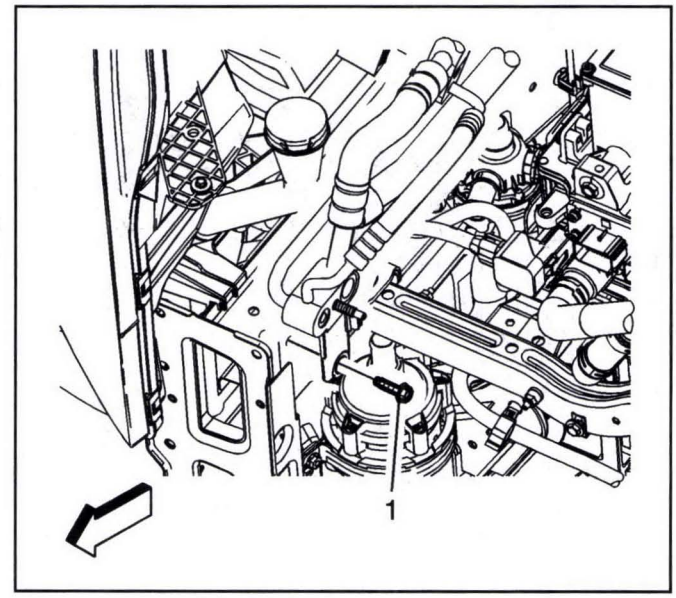

3232561

8. Remove the air conditioning evaporator hose bolt (1) from the front compartment front inner side rail.

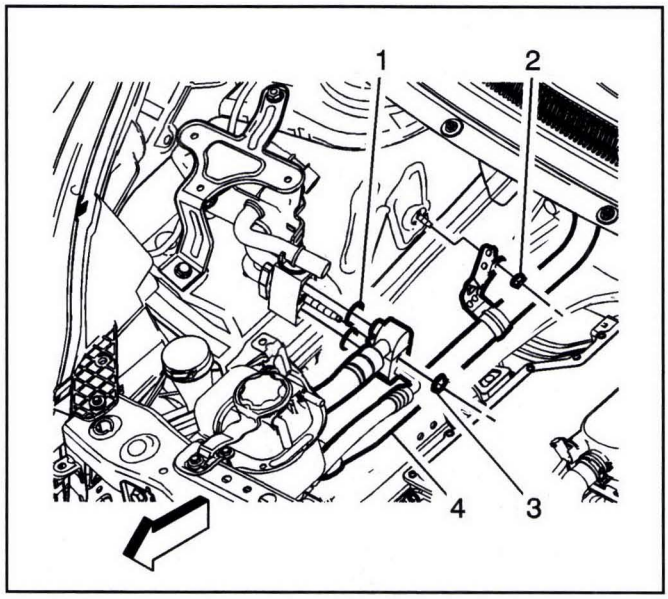

3232563

9. Remove the drive motor battery coolant cooler bolt and drive motor battery coolant cooler nut from the drive motor battery coolant cooler bracket to provide room to remove the air conditioning evaporator hose. Refer to *Drive Motor Battery Coolant Cooler Replacement on page 9-308*.
10. Remove the air conditioning evaporator hose nut (3) from the drive motor battery coolant cooler.
11. Remove and discard the old sealing washers (1) from the air conditioning evaporator hose (4).
12. Remove the air conditioning evaporator hose nut (2) from the front wheelhouse rear panel stud.

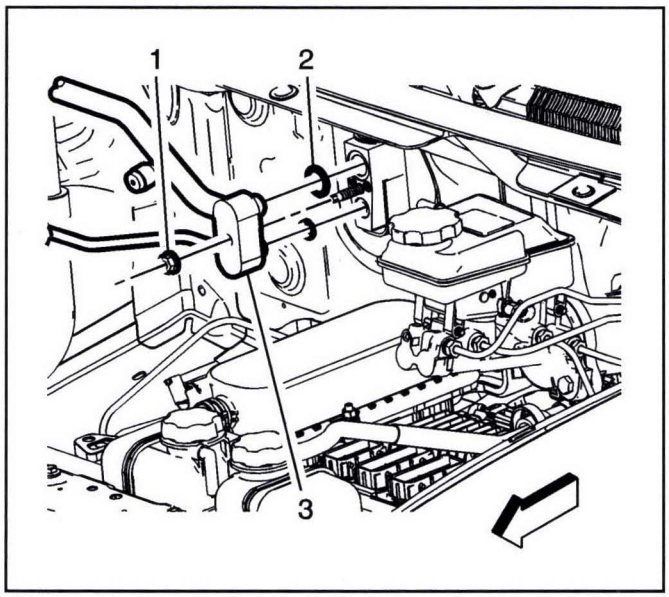

3232565

13. Remove the plenum front panel. Refer to *Plenum Front Panel Replacement on page 3-38*.
14. Remove the air conditioning evaporator hose nut (1) from the air conditioning evaporator thermal expansion valve tube.
15. Remove the air conditioning evaporator hose (3) from the vehicle.
16. Remove and discard the old sealing washers (2) from the air conditioning evaporator hose.

Installation Procedure

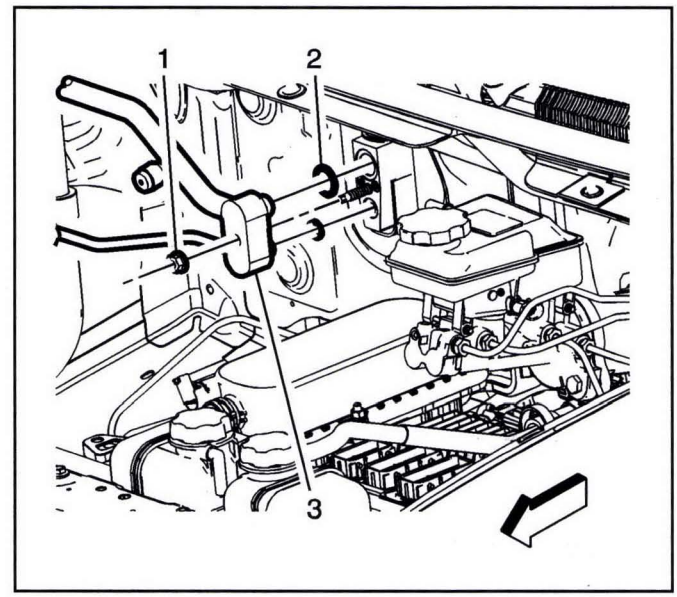

3232565

1. Install NEW sealing washers (2) to the air conditioning evaporator hose (3).
2. Install the air conditioning evaporator hose (3) to the vehicle.
3. Install the air conditioning evaporator hose (3) to the air conditioning evaporator thermal expansion valve tube.

Caution: Refer to *Fastener Caution on page 0-8*.

4. Install the air conditioning evaporator hose nut (1) to the air conditioning evaporator thermal expansion valve tube and tighten to **22** N•m **(16 lb ft)**.
5. Install the plenum front panel. Refer to *Plenum Front Panel Replacement on page 3-38*.

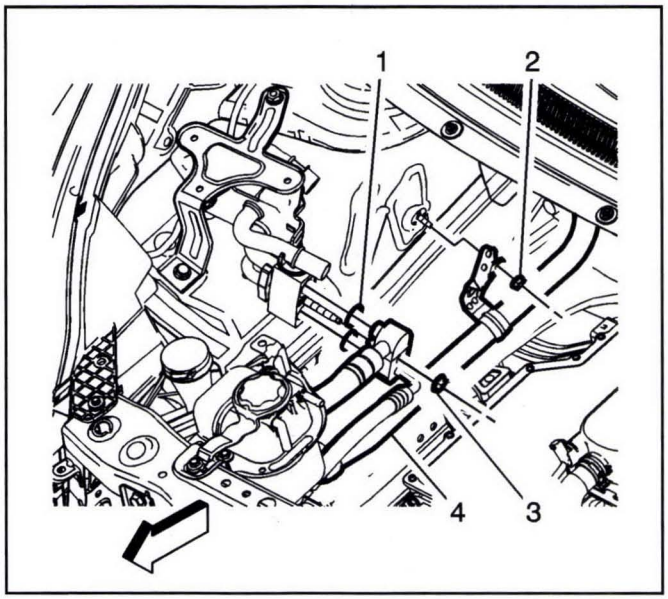

3232563

6. Install NEW sealing washers (1) to the air conditioning evaporator hose (4).
7. Install the air conditioning evaporator hose (4) to the front wheelhouse rear panel stud.
8. Install the air conditioning evaporator hose nut (2) to the front wheelhouse rear panel stud and tighten to **9** N•m **(80 lb in)**.
9. Install the air conditioning evaporator hose (4) to the drive motor battery coolant cooler.
10. Install the air conditioning evaporator hose nut (3) to the drive motor battery coolant cooler and tighten to **22** N•m **(16 lb ft)**.
11. Install the drive motor battery coolant cooler bolt and drive motor battery coolant cooler nut. Refer to *Drive Motor Battery Coolant Cooler Replacement on page 9-308*.

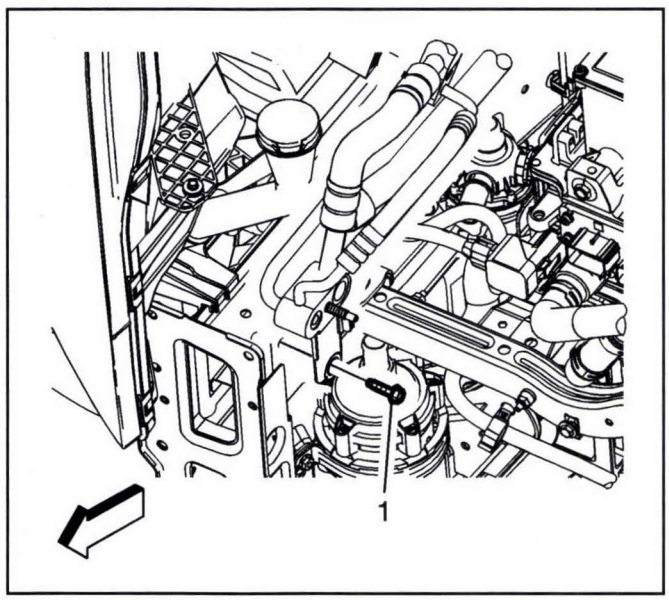

3232561

12. Install the air conditioning evaporator hose bolt (1) to the front compartment front inner side rail and tighten to **9** N•m **(80 lb in)**.
13. Install the electrical connector to the air conditioning evaporator hose.

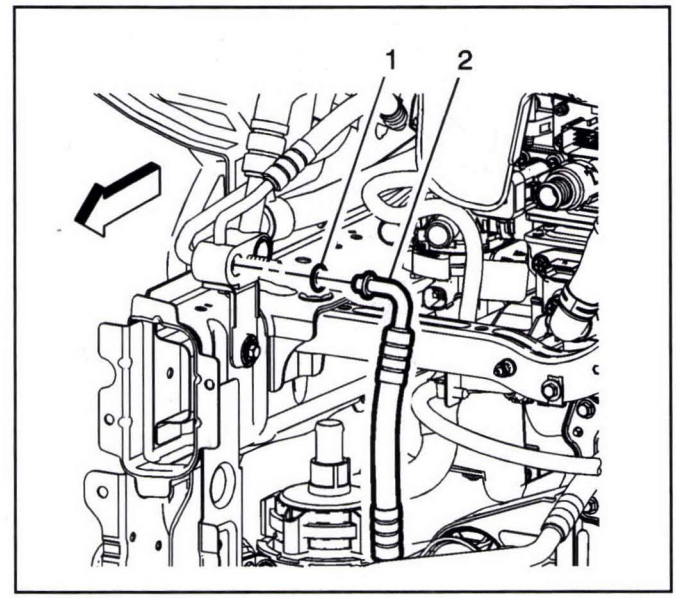

3229985

14. Install NEW sealing washers (1) to the air conditioning compressor and condenser hose (2).
15. Install the air conditioning compressor hose and the air conditioning compressor and condenser hose to the air conditioning evaporator hose (2). Refer to *Air Conditioning Compressor and Condenser Hose Replacement on page 10-32*.
16. Install the radiator surge tank clamp bracket replacement (right side). Refer to *Radiator Surge Tank Clamp Bracket Replacement (Right Side) on page 9-279* or *Radiator Surge Tank Clamp Bracket Replacement (Left Side) on page 9-280*.
17. Install the high voltage disconnect circuit connector cover. Refer to *High Voltage Disconnect Circuit Connector Cover Replacement on page 9-174*.
18. Install the front compartment sight shield. Refer to *Front Compartment Front Sight Shield Replacement on page 3-39*.
19. Evacuate and charge the refrigerant system. Refer to *Refrigerant Recovery and Recharging on page 10-17*.

Air Conditioning Evaporator Thermal Expansion Valve Tube Replacement

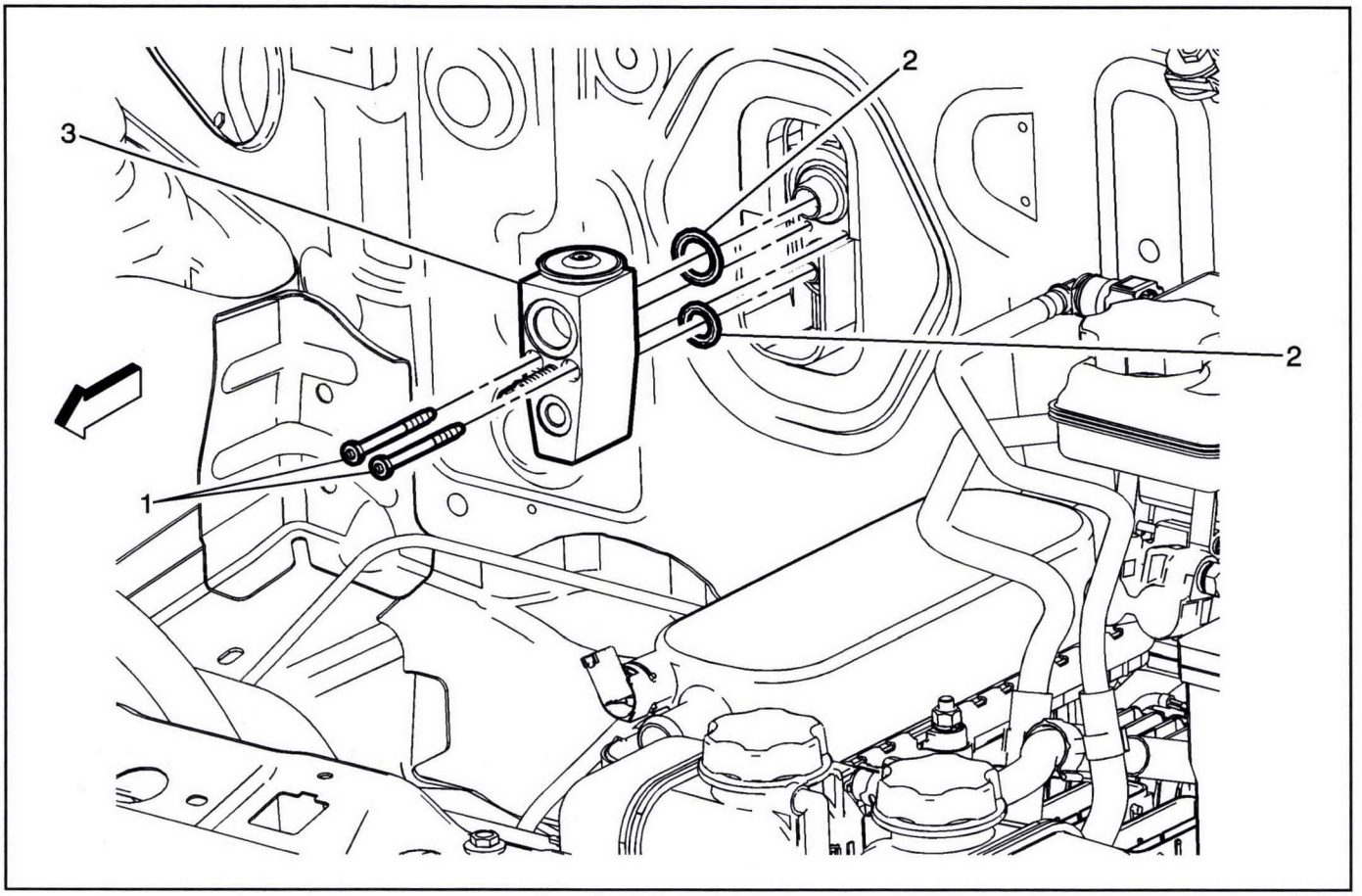

3232567

Air Conditioning Evaporator Thermal Expansion Valve Tube Replacement

Callout	Component Name
Danger: Before conducting any repair to this high voltage cooling system, it is necessary to determine/verify whether no high-voltage system faults exist. If high-voltage faults exist, follow published DTC diagnostics/repair procedures prior to performing any cooling system repairs. Failure to correct High Voltage Faults before working on the high voltage cooling system could result in personal injury or death.	
	Preliminary Procedure 1. Turn vehicle power OFF and remove all keyless entry transmitters from the vehicle and secure in a place outside the vehicle. 2. Remove the high voltage disconnect circuit connector cover. Refer to *High Voltage Disconnect Circuit Connector Cover Replacement on page 9-174*. 3. Recover the refrigerant. Refer to *Refrigerant Recovery and Recharging on page 10-17*. 4. Disconnect the air conditioning evaporator hose from the air conditioning evaporator thermal expansion valve tube. Refer to *Air Conditioning Evaporator Hose Assembly Replacement on page 10-34*.
1	Air Conditioning Thermal Expansion Valve Bolt (Qty: 2). **Caution:** Refer to *Fastener Caution on page 0-8*. **Tighten** 7 N•m (62 lb in)
2	Air Conditioning Sealing Washer (Qty: 2) **Procedure** Remove and discard the old sealing washers and replace with NEW sealing washers.
3	Air Conditioning Thermal Expansion Valve Tube

Air Conditioning Refrigerant Service Valve Core Replacement

Special Tools

- *GE 50078* Electronic Leak Detector
- *GE 46246* Valve Core Tool

For equivalent regional tools. Refer to *Special Tools on page 10-77*.

Removal Procedure

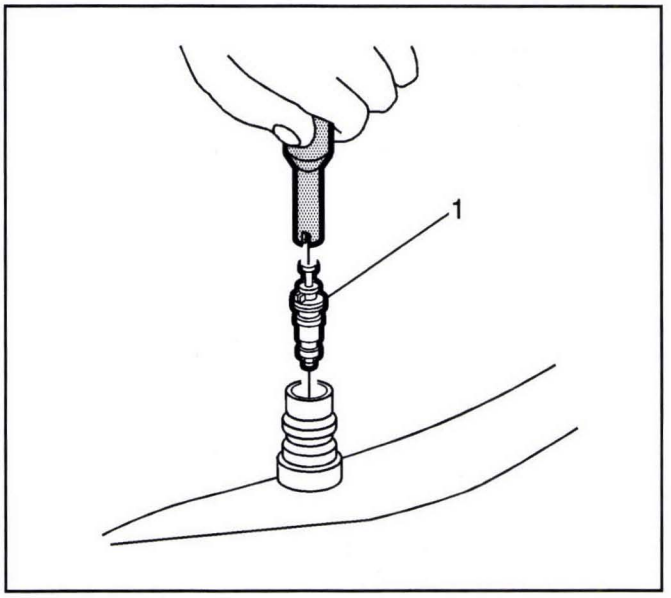

2774721

1. Recover the refrigerant from the A/C system. Refer to *Refrigerant Recovery and Recharging on page 10-17*.
2. Using the *GE 46246* Valve Core Tool, remove the valve core (1) from the service port.

Installation Procedure

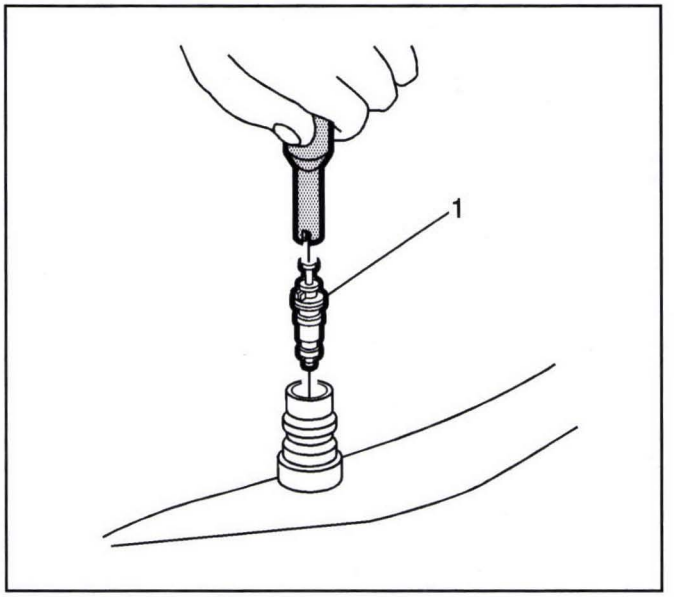

2774721

Caution: Refer to *Fastener Caution on page 0-8*.

1. Install the valve core (1) to the service port.
2. Using the *GE 46246* Valve Core Tool, tighten the valve core.
3. Evacuate and recharge the A/C system. Refer to *Refrigerant Recovery and Recharging on page 10-17*.
4. Leak test the fittings of the component using *GE 50078* Electronic Leak Detector.

Receiver and Dehydrator Replacement

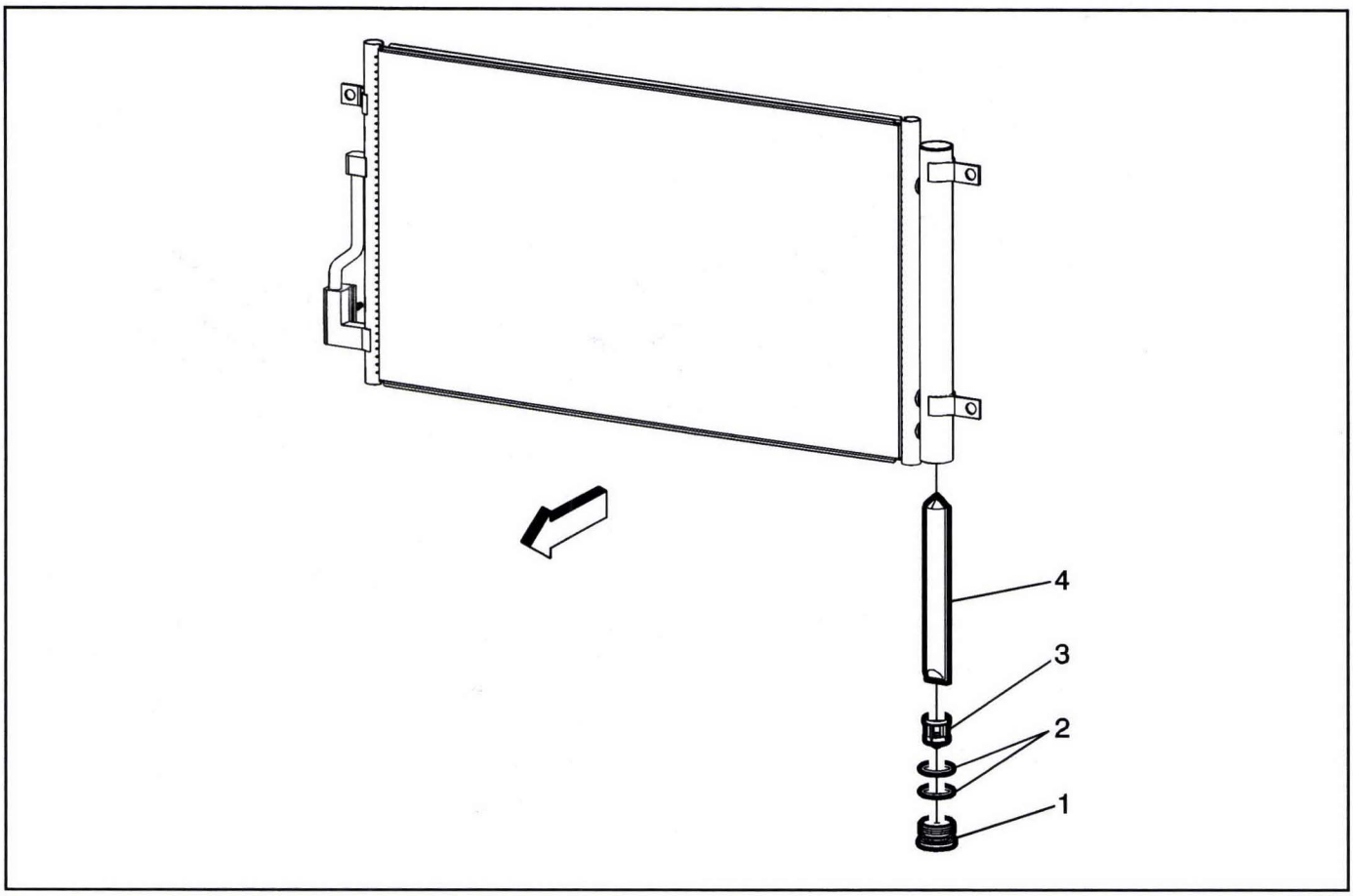

3243393

Receiver and Dehydrator Replacement

Callout	Component Name
Preliminary Procedure 1. Recover the refrigerant. Refer to *Refrigerant Recovery and Recharging on page 10-17*. 2. Remove the front bumper fascia air deflector. Refer to *Front Bumper Fascia Air Deflector Replacement on page 3-62*.	
1	Air Conditioning Receiver and Dehydrator Plug **Caution:** Refer to *Fastener Caution on page 0-8*. **Note:** Cap all A/C components immediately to prevent system contamination.
2	Receiver and Dehydrator O-ring (Qty: 2) **Note:** Remove and discard the O-ring and replace with NEW only. Refer to *Air Conditioning O-Ring Seal Replacement on page 10-30*.
3	Air Conditioning Refrigerant Filter
4	Air Conditioning Refrigerant Desiccant

Air Conditioning Evaporator Thermal Expansion Valve Replacement

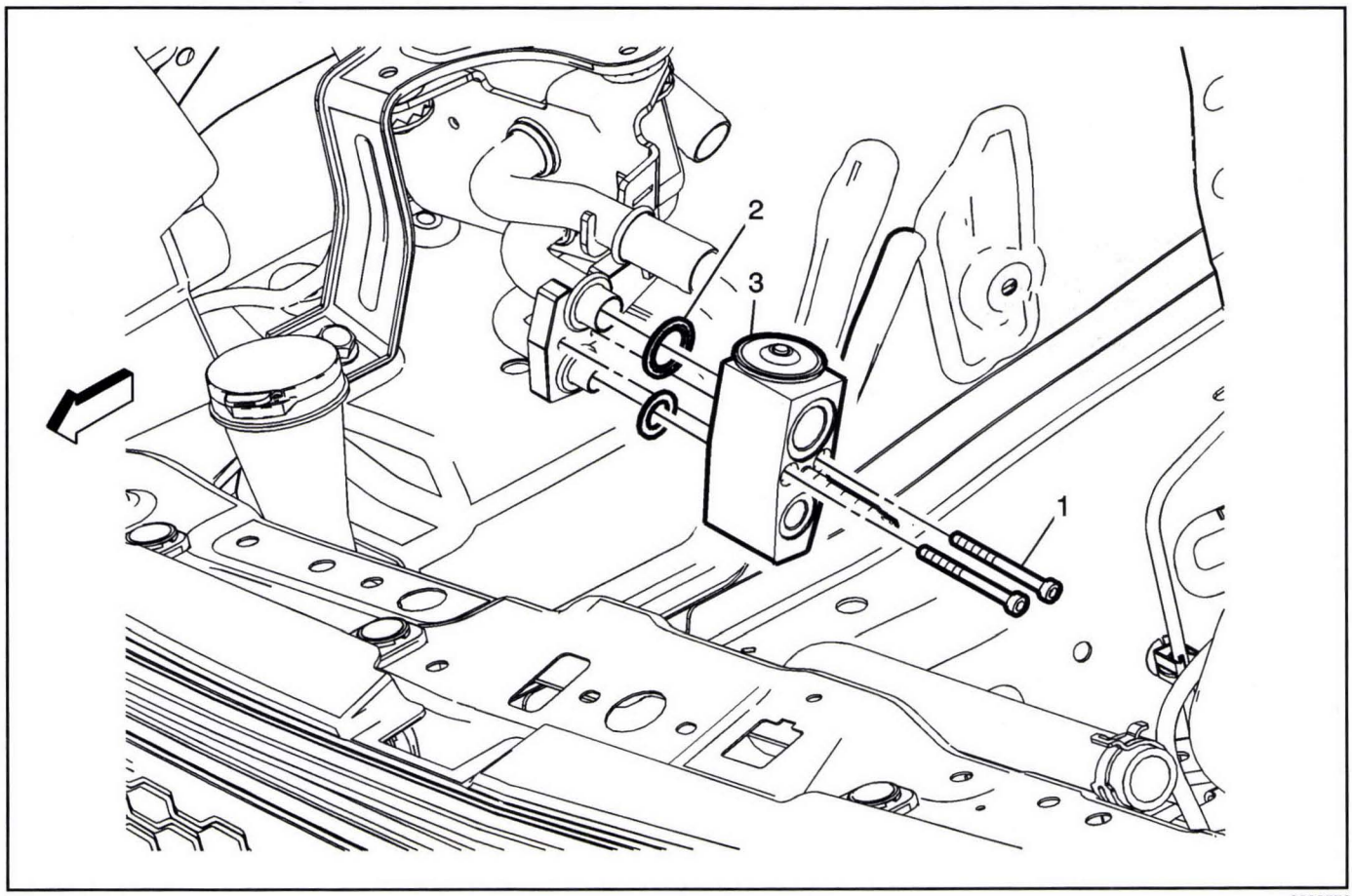

3232570

Air Conditioning Evaporator Thermal Expansion Valve Replacement

Callout	Component Name
Danger: Before conducting any repair to this high voltage cooling system, it is necessary to determine/verify whether no high-voltage system faults exist. If high-voltage faults exist, follow published DTC diagnostics/repair procedures prior to performing any cooling system repairs. Failure to correct High Voltage Faults before working on the high voltage cooling system could result in personal injury or death. **Preliminary Procedure** 1. Turn vehicle power OFF and remove all keyless entry transmitters from the vehicle and secure in a place outside the vehicle. 2. Recover the refrigerant. Refer to *Refrigerant Recovery and Recharging on page 10-17*. 3. Disconnect the air conditioning evaporator hose from the air conditioning evaporator thermal expansion valve. Refer to *Air Conditioning Evaporator Hose Assembly Replacement on page 10-34*.	
1	Air Conditioning Thermal Expansion Valve Bolts (Qty: 2). **Caution:** Refer to *Fastener Caution on page 0-8*. **Tighten** 7 N•m (62 lb in)
2	Air Conditioning Sealing Washer (Qty: 2) **Procedure** Remove and discard the old sealing washers and replace with NEW sealing washers.
3	Air Conditioning Thermal Expansion Valve

Air Conditioning Refrigerant Pressure Sensor Replacement - Low Pressure

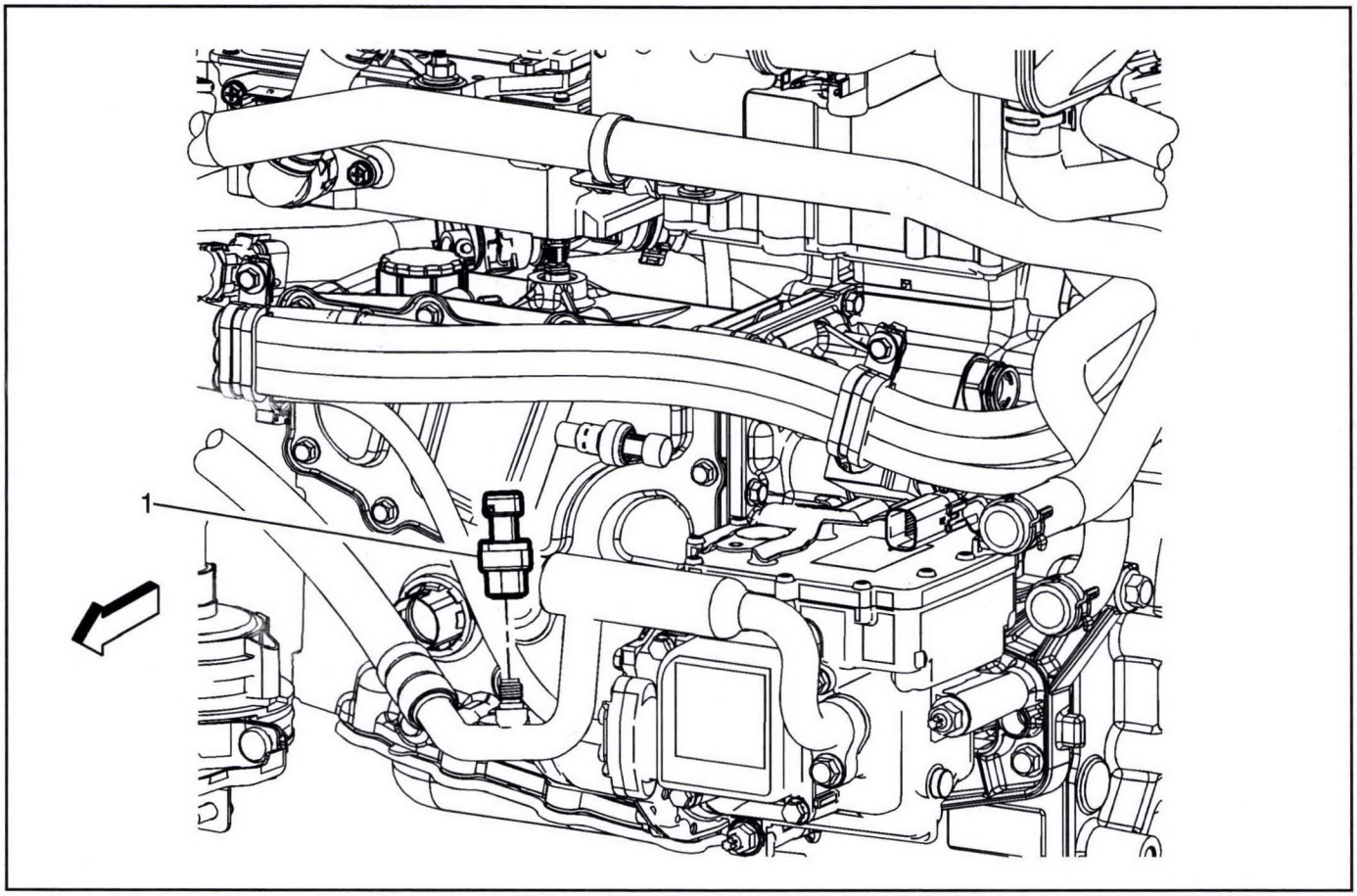

3243408

Air Conditioning Refrigerant Pressure Sensor Replacement - Low Pressure

Callout	Component Name
Danger: Before conducting any repair to this high voltage cooling system, it is necessary to determine/verify whether no high-voltage system faults exist. If high-voltage faults exist, follow published DTC diagnostics/repair procedures prior to performing any cooling system repairs. Failure to correct High Voltage Faults before working on the high voltage cooling system could result in personal injury or death. **Preliminary Procedure** 1. Turn vehicle power OFF and remove all keyless entry transmitters from the vehicle and secure in a place outside the vehicle. 2. Remove the front compartment air deflector. Refer to *Front Compartment Air Deflector Replacement on page 3-125*. 3. Disconnect the electrical connector from the air conditioning (A/C) refrigerant pressure sensor.	
1	Air Conditioning Refrigerant Pressure Sensor **Caution:** Refer to *Fastener Caution on page 0-8*.

Air Conditioning Refrigerant Pressure Sensor Replacement - High Pressure

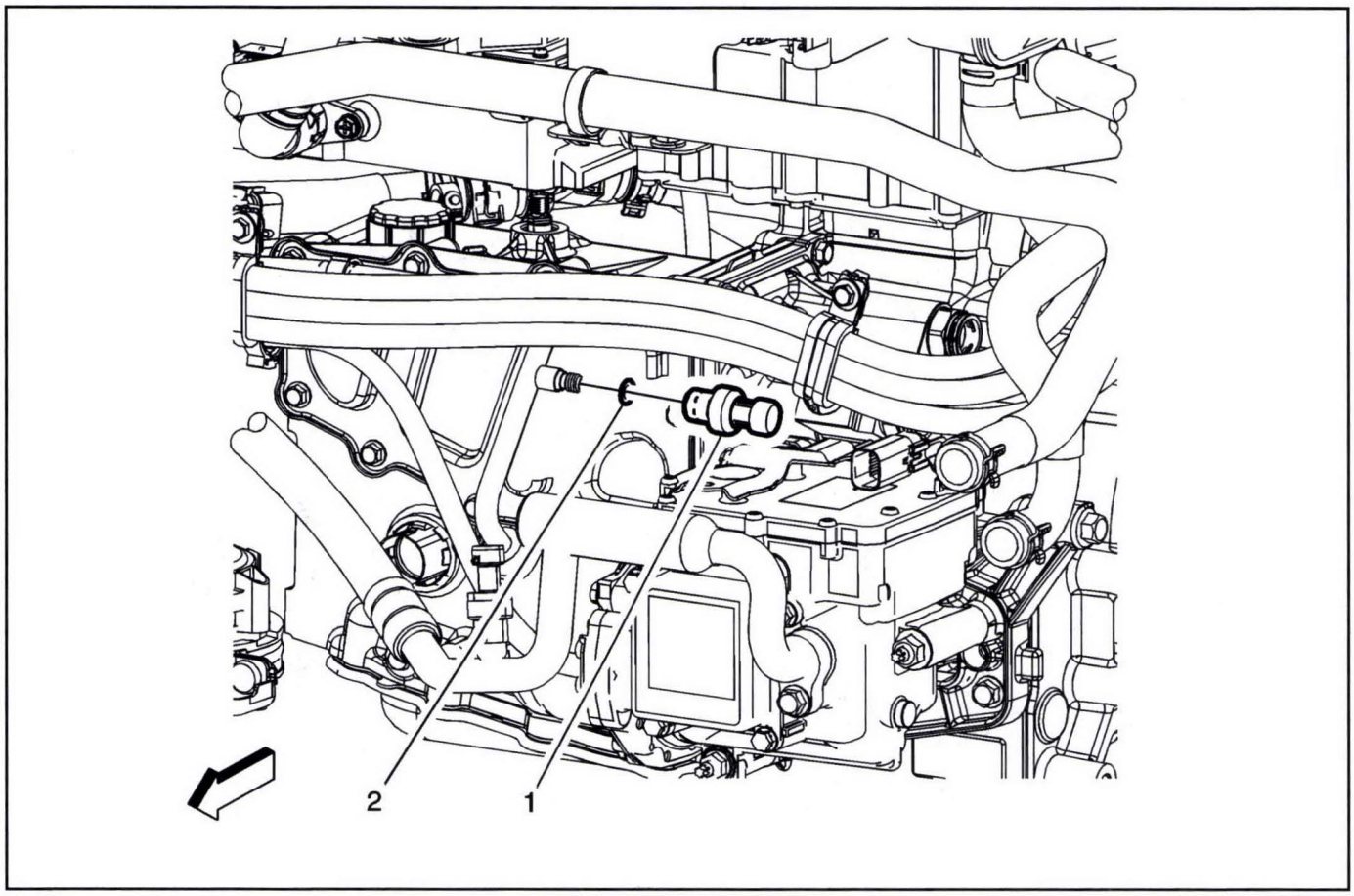

3243396

Air Conditioning Refrigerant Pressure Sensor Replacement - High Pressure

Callout	Component Name
Danger: Before conducting any repair to this high voltage cooling system, it is necessary to determine/verify whether no high-voltage system faults exist. If high-voltage faults exist, follow published DTC diagnostics/repair procedures prior to performing any cooling system repairs. Failure to correct High Voltage Faults before working on the high voltage cooling system could result in personal injury or death. **Preliminary Procedure** 1. Turn vehicle power OFF and remove all keyless entry transmitters from the vehicle and secure in a place outside the vehicle. 2. Remove the front compartment air deflector. Refer to *Front Compartment Air Deflector Replacement on page 3-125*. 3. Disconnect the electrical connector from the air conditioning (A/C) refrigerant pressure sensor.	
1	Air Conditioning Refrigerant Pressure Sensor **Caution:** Refer to *Fastener Caution on page 0-8*.
2	Air Conditioning Refrigerant Pressure Sensor O-ring **Note:** Remove and discard the O-ring and replace with NEW only. Refer to *Air Conditioning O-Ring Seal Replacement on page 10-30*.

Air Conditioning Condenser Replacement

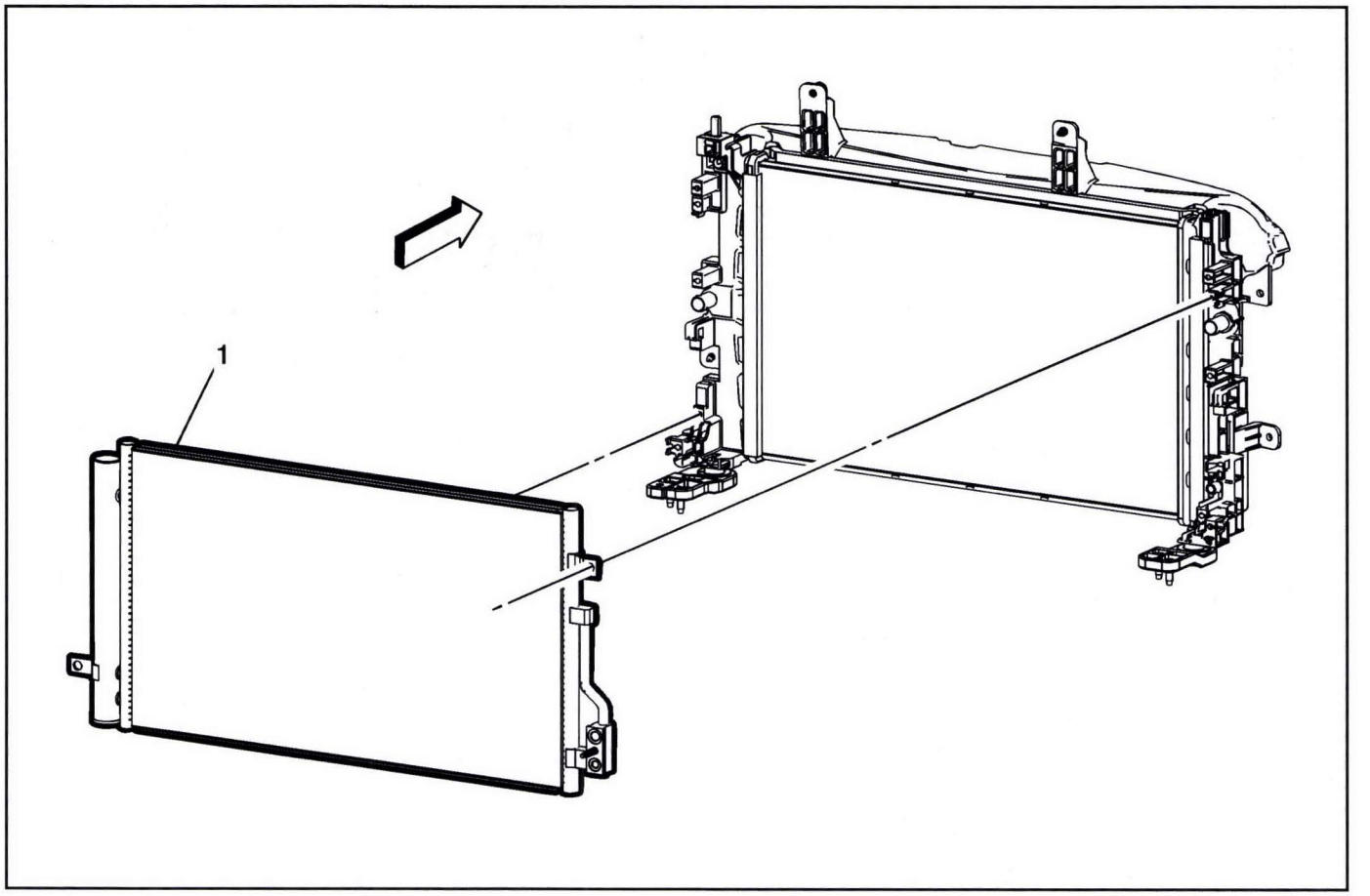

3227489

Air Conditioning Condenser Replacement

Callout	Component Name
Preliminary Procedure 1. Recover the refrigerant. Refer to *Refrigerant Recovery and Recharging on page 10-17*. 2. Remove the driver motor battery coolant radiator. Refer to *Drive Motor Battery Coolant Radiator Replacement on page 9-312*. 3. Remove the air conditioning compressor and condenser hose from condenser. Refer to *Air Conditioning Compressor and Condenser Hose Replacement on page 10-32*.	
1	Air Conditioning Condenser **Procedure** Transfer components as necessary.

Heater and Air Conditioning Evaporator and Blower Module Removal and Installation

Removal Procedure

1. Disconnect the negative battery cable. *Battery Negative Cable Disconnection and Connection on page 9-20*
2. Recover the refrigerant system. *Refrigerant Recovery and Recharging on page 10-17*
3. Drain the heater coolant heater system. *Heater Coolant Heater Draining and Filling on page 10-21*
4. Remove the auxiliary heater outlet hose from the heater core tube. *Auxiliary Heater Outlet Hose Replacement on page 10-52*
5. Remove the heater outlet hose from the heater core tube. *Heater Outlet Hose Replacement on page 10-54*
6. Remove the evaporator hose assembly from the thermal expansion valve. *Air Conditioning Evaporator Hose Assembly Replacement on page 10-34*
7. Remove the instrument panel tie bar assembly. *Instrument Panel Tie Bar Replacement on page 2-40*

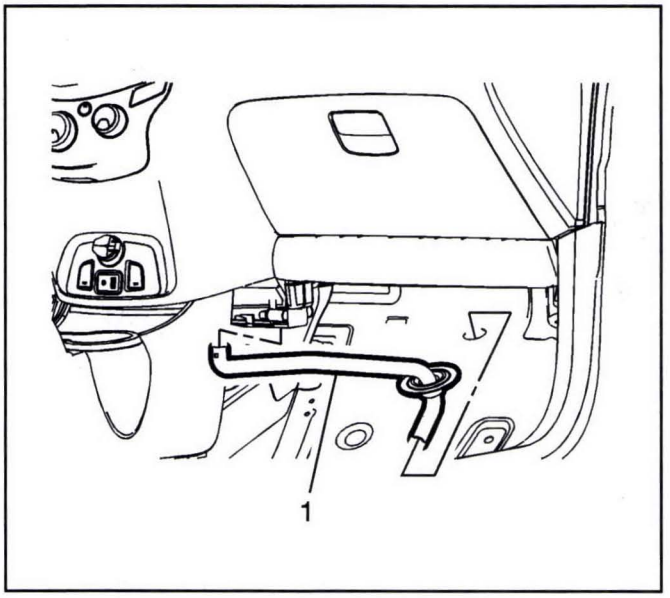

3220393

8. Remove the Heating Ventilation and Air Conditioning (HVAC) module assembly drain tube (1) from the HVAC module assembly.

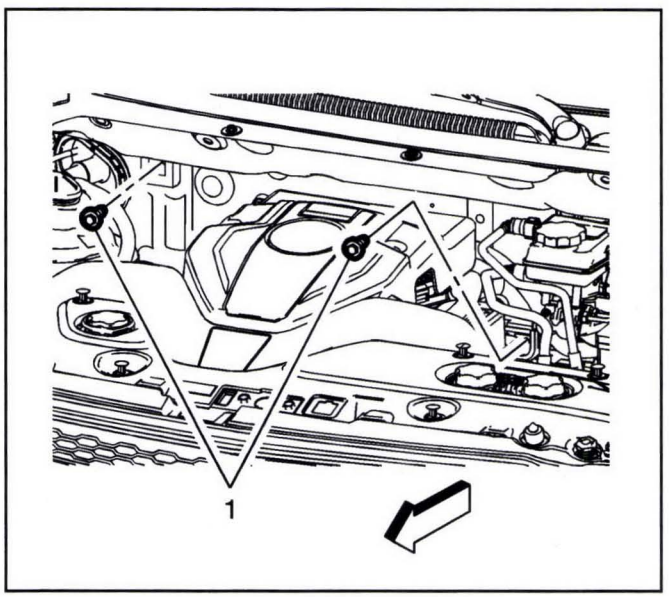

3220397

9. From within the engine compartment, remove the HVAC module assembly bolts, (1) securing the HVAC module assembly to the cowl panel.

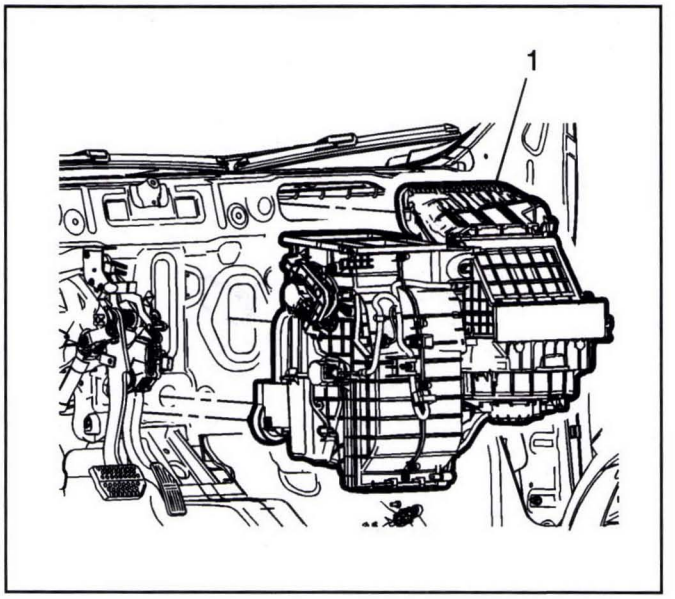

3220130

Caution: Refer to *HVAC Module Drain Tube Caution on page 0-9*.

10. Remove the HVAC module assembly (1) from the vehicle.
11. Transfer all necessary components

Installation Procedure

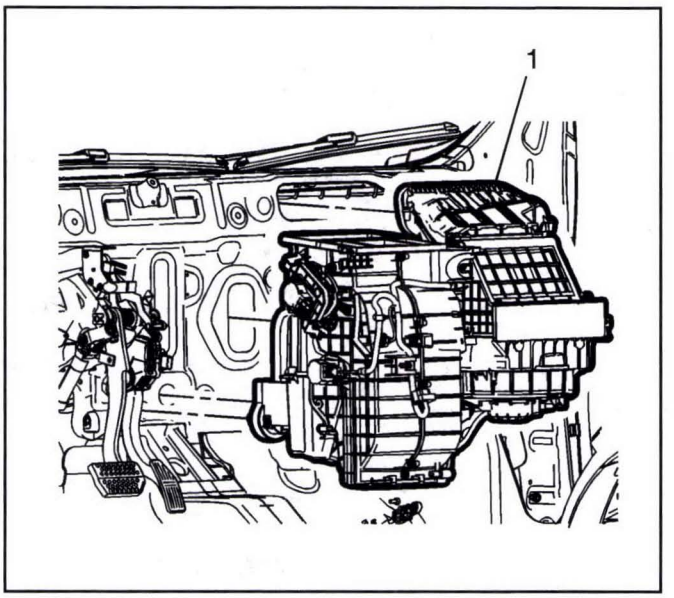

3220130

1. Position the HVAC module assembly (1) into the vehicle and temporarily support it.

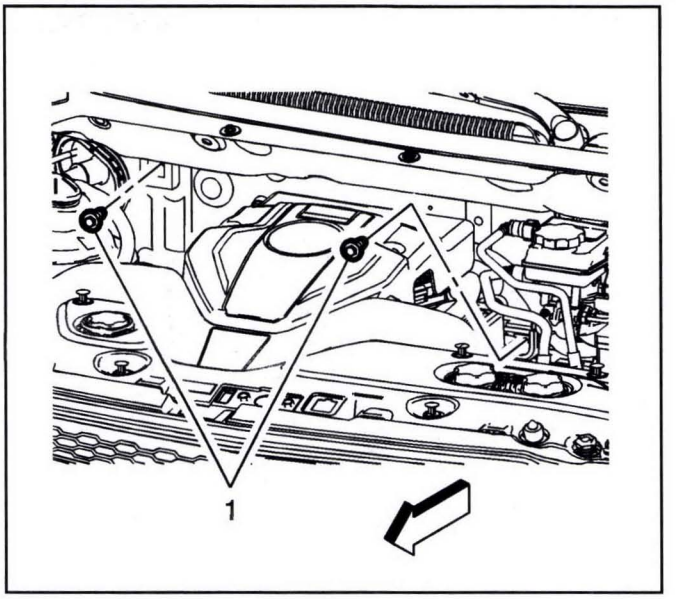

3220397

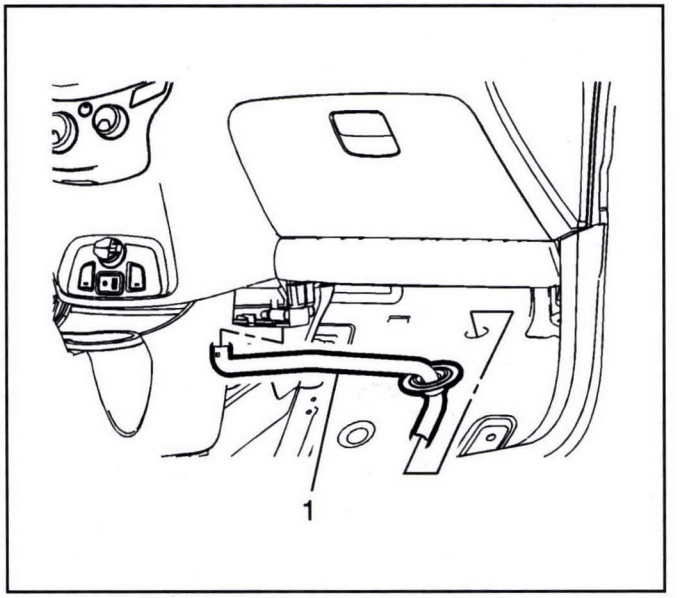

3220393

Caution: Refer to *Fastener Caution on page 0-8*.

2. From within the engine compartment, install the HVAC module assembly bolts (1) securing the HVAC module assembly to the cowl panel, and tighten to **9** N•m **(80 lb in)** .
3. Install the HVAC module assembly drain tube (1) to the HVAC module assembly.
4. Install the instrument panel tie bar assembly. *Instrument Panel Tie Bar Replacement on page 2-40*
5. Install the evaporator hose assembly to the thermal expansion valve. *Air Conditioning Evaporator Hose Assembly Replacement on page 10-34*
6. Install the heater outlet hose to the heater core tube. *Heater Outlet Hose Replacement on page 10-54*
7. Install the auxiliary heater outlet hose to the heater core tube. *Auxiliary Heater Outlet Hose Replacement on page 10-52*
8. Fill the heater coolant heater system. *Heater Coolant Heater Draining and Filling on page 10-21*
9. Recharge the refrigerant system. *Refrigerant Recovery and Recharging on page 10-17*
10. Connect the negative battery cable. *Battery Negative Cable Disconnection and Connection on page 9-20*
11. Visually inspect for coolant leaks.
12. Visually inspect for refrigerant leaks.

Heater and Air Conditioning Evaporator and Blower Upper Case Replacement

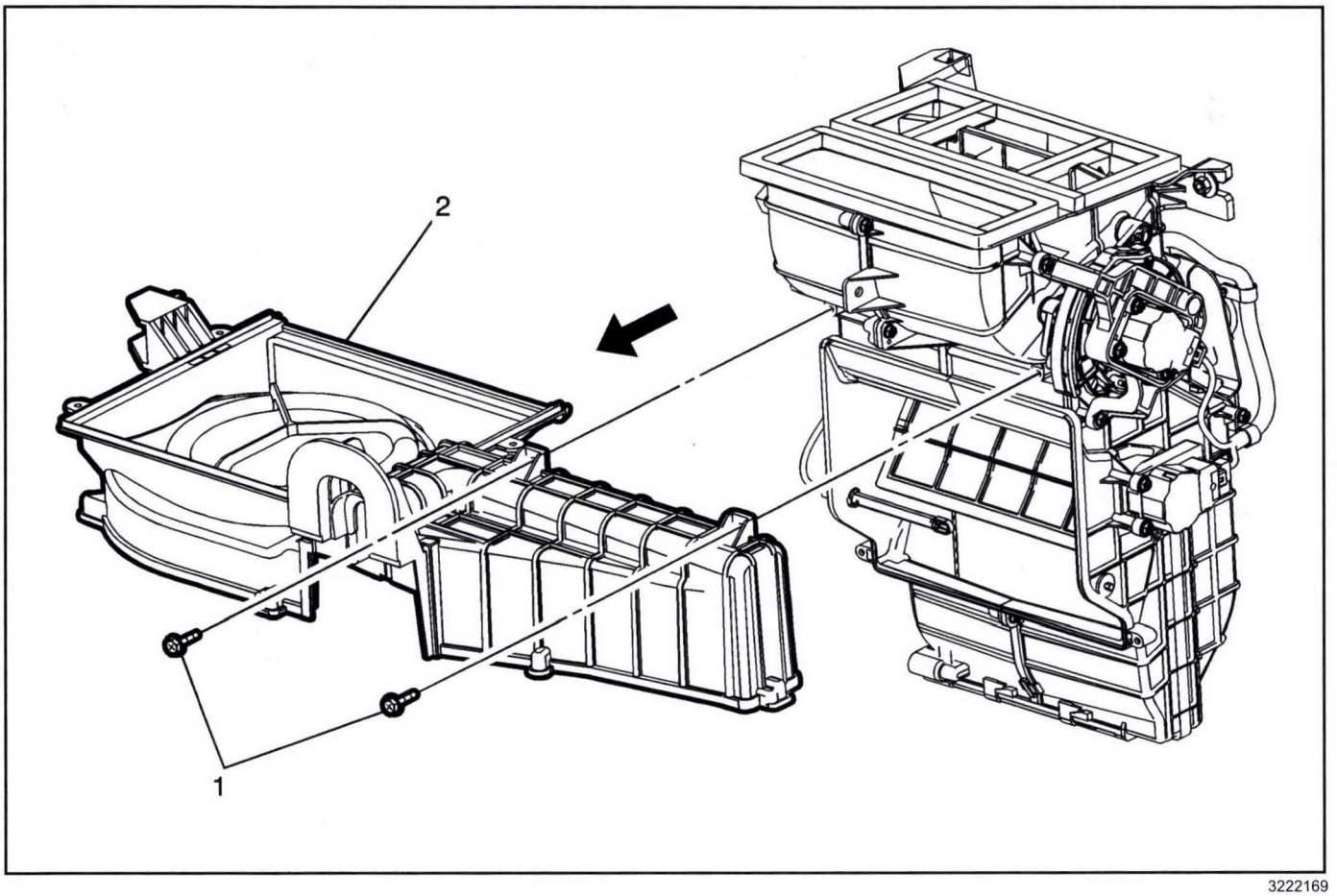

3222169

Heater and Air Conditioning Evaporator and Blower Upper Case Replacement

Callout	Component Name
Preliminary Procedures 1. Remove the air conditioning evaporator core. Refer to *Air Conditioning Evaporator Core Replacement (R-1234yf) on page 10-47*. 2. Remove the air inlet assembly. Refer to *Air Inlet Assembly Replacement on page 10-58*.	
1	Air Conditioning Evaporator and Blower Upper Case Bolt (Qty: 2) **Caution:** Refer to *Fastener Caution on page 0-8*.
2	Air Conditioning Evaporator and Blower Upper Case **Procedure** Transfer the components as necessary.

Heater and Air Conditioning Evaporator and Blower Lower Case Replacement

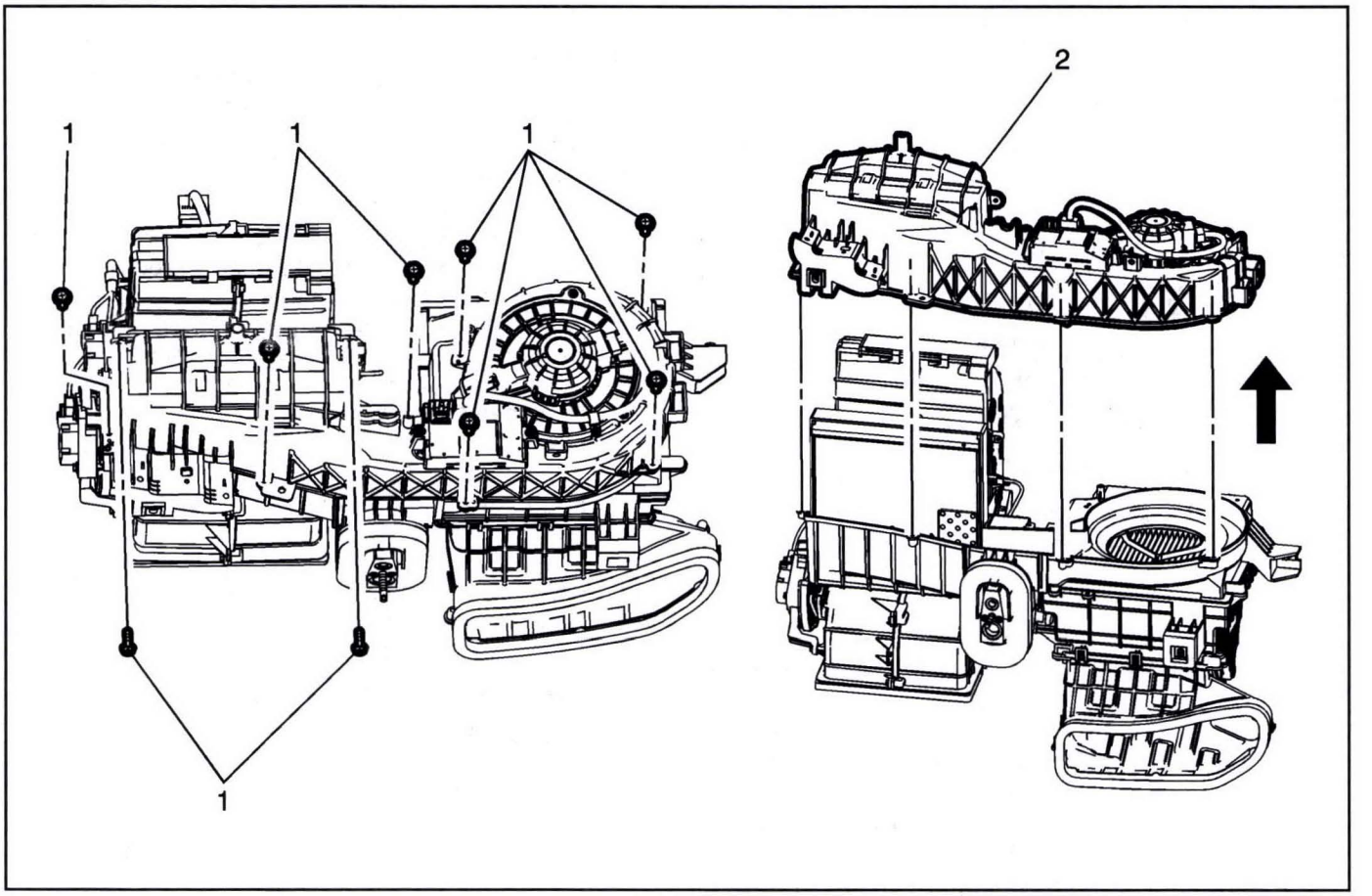

3222168

Heater and Air Conditioning Evaporator and Blower Lower Case Replacement

Callout	Component Name
Preliminary Procedures 1. Remove the heater and air conditioning evaporator and blower module assembly. Refer to *Heater and Air Conditioning Evaporator and Blower Module Removal and Installation on page 10-43*. 2. Remove the heater core inlet and outlet pipes. Refer to *Heater Inlet And Outlet Pipe Replacement on page 10-53*.	
1	Air Conditioning Evaporator and Blower Lower Case Bolt (Qty: 9) **Caution:** Refer to *Fastener Caution on page 0-8*.
2	Air Conditioning Evaporator and Blower Lower Case **Procedure** Transfer the components as necessary.

Air Conditioning Evaporator Core Replacement (R-1234yf)

Warning: Refer to R-1234yf Proper Service Procedures Warning on page 0-5.

Caution: Evaporators in vehicles equipped with R-1234yf refrigerant systems, shall never be repaired or replaced with one removed from another or salvage. Only new, SAE J2842 certified and labeled evaporator(s) shall be used as replacement parts. Failure to follow the above guidelines could result in EPA Penalties and/or fines.

Note: Technicians repairing or servicing motor vehicle air conditioning (MVAC) systems must be trained and certified by an EPA approved organization. Certification is obtained by passing an EPA approved examination. (http://www.epa.gov/ozone/title6/609/technicians/609certs.html)

Removal Procedures

1. Remove the heater and air conditioning evaporator and blower module assembly. Refer to *Heater and Air Conditioning Evaporator and Blower Module Removal and Installation on page 10-43*.
2. Remove the air conditioning evaporator and blower lower case. Refer to *Heater and Air Conditioning Evaporator and Blower Lower Case Replacement on page 10-47*.

3. Remove the air conditioning evaporator thermal expansion valve. Refer to *Air Conditioning Evaporator Thermal Expansion Valve Replacement on page 10-40*.

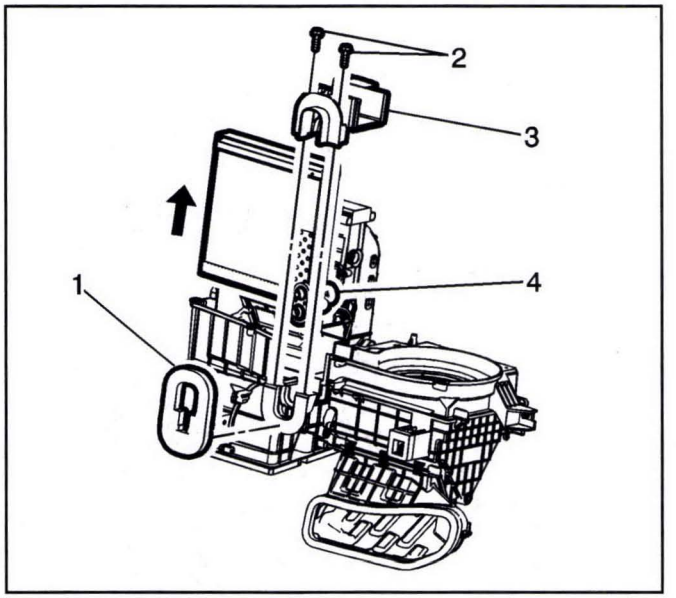

3242937

4. Remove the evaporator thermal expansion valve seal (1) from the air conditioning evaporator and blower upper case assembly.
5. Remove the evaporator thermal expansion valve support bracket bolts (2).
6. Remove the evaporator thermal expansion valve support bracket (3) from the air conditioning evaporator and blower upper case assembly.
7. Lift the air conditioning evaporator core (4) out of the heater and air conditioning evaporator and blower upper case assembly.

Installation Procedures

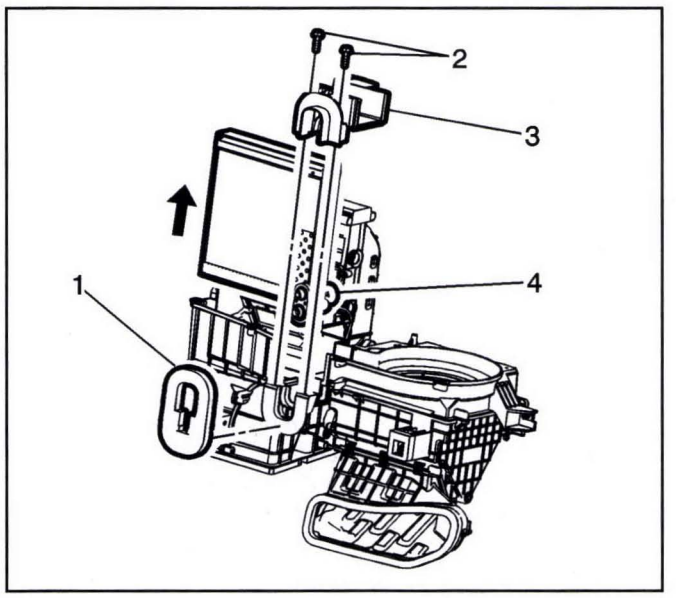

3242937

1. Position the air conditioning evaporator core (4) in to the heater and air conditioning evaporator and blower upper case assembly.
2. Install the evaporator thermal expansion valve support bracket (3) on to the air conditioning evaporator and blower upper case assembly.

Caution: Refer to *Fastener Caution on page 0-8*.

3. Install the evaporator thermal expansion valve support bracket bolts (2).
4. Install the evaporator thermal expansion valve seal (1) on to the air conditioning evaporator and blower upper case assembly.
5. Install the air conditioning evaporator thermal expansion valve. Refer to *Air Conditioning Evaporator Thermal Expansion Valve Replacement on page 10-40*.
6. Install the air conditioning evaporator and blower lower case. Refer to *Heater and Air Conditioning Evaporator and Blower Lower Case Replacement on page 10-47*.
7. Install the heater and air conditioning evaporator and blower module assembly. Refer to *Heater and Air Conditioning Evaporator and Blower Module Removal and Installation on page 10-43*.

Replacement Evaporator Label Requirements

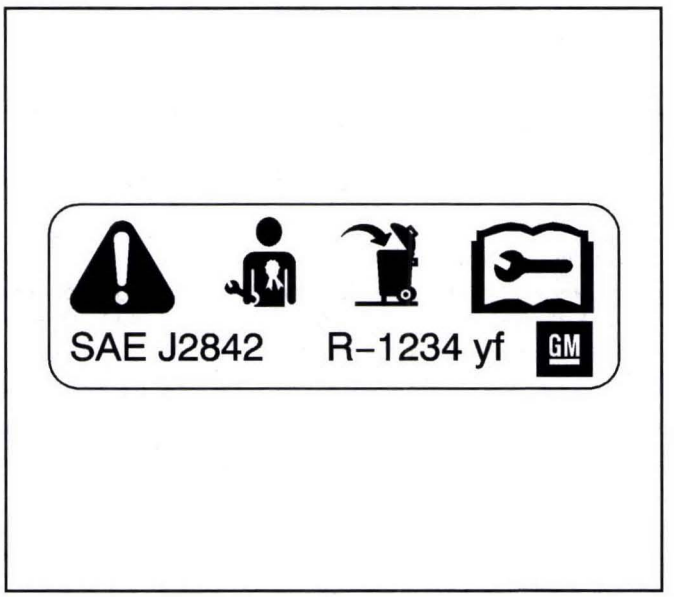

2777206

Replacement evaporators shall have a permanent marking (label, stamp, or etching) that indicates that this evaporator design meets SAE J2842 and shall include the wording below or optionally the symbols as shown:

Text Only- Label Wording- “Conforms to SAE J2842 (Evaporator Manufacturer’s Name or Trademark) Replace only with new evaporator certified to meet SAE J2842.

Leak Free Joints Inside the Passenger Compartment

If a refrigerant joint/connection is made or disturbed inside the passenger cabin the following steps shall be followed by the technician to ensure the joint/ connection is leak free.

1. Shall clean all dirt, grease and debris from and around connection joints before disassembly/ assembly of refrigerant connections.
2. Shall be advised to carefully inspect the joint/ connection seal surfaces for signs of deformation, contamination or damage after disassembly.
3. Shall be advised that Seals/O-rings shall never be reused, but replaced with all new parts.
4. Shall be advised to ensure proper alignment of male/female portions and seal so there is no misalignment and stress on the fitting connection.
5. Shall tighten the joint using the proper torque.
6. With full refrigerant charge installed and the vehicles HVAC blower motor set on its lowest speed, A/C switch off and air distribution set to floor. The technician shall insert a SAE J2913 compliant electronic leak detector set to high sensitivity (4 grams/year leak rate) into the center of a floor duct outlet, as far as possible. The technician shall monitor the electronic leak detector for 5 minutes or until the detector alarms.
   - If electronic leak detector alarms, recover the refrigerant and repair the leak.
   - If after 5 minutes there is no alarm, there is no indication of a leak in the passenger compartment and the repair can be completed.
7. If vehicle is equipped with an auxiliary evaporator, monitor the air downstream from the evaporator at the outlet duct closest to the auxiliary unit under the same conditions and set up as step 6.

Proper Disposal of the Replaced Evaporator

The replaced evaporator shall be disabled to ensure that it never be repaired or reused.

Disable the replaced evaporator by completing one of the following steps:

- Using tin snips sever a minimum of 3 of the evaporators tubes.
- Drill or Punch a minimum of two 25 mm (.25 inch) holes in each end tank.

Air Conditioning Evaporator Module Drain Hose Replacement

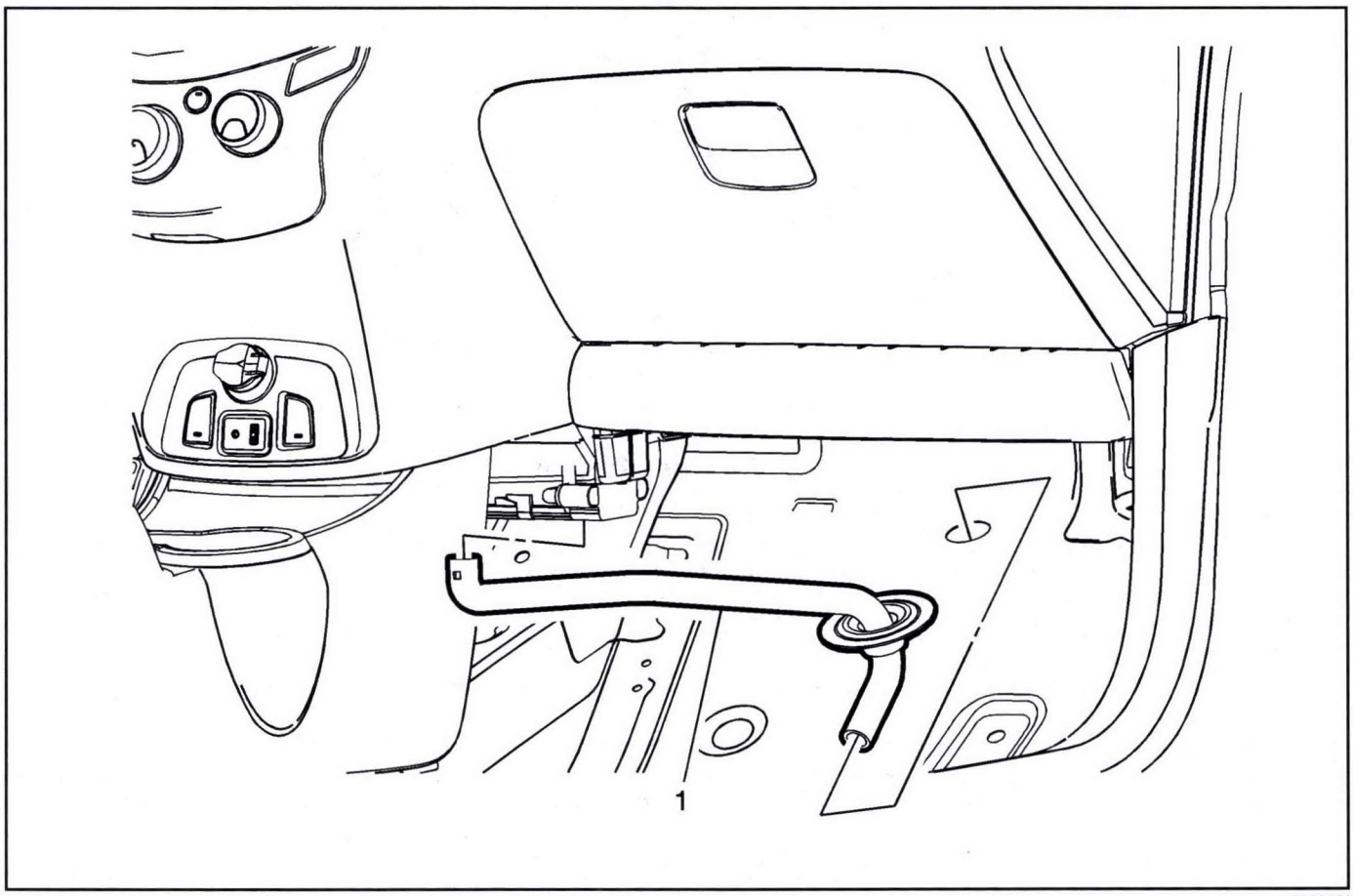

3220399

Air Conditioning Evaporator Module Drain Hose Replacement

Callout	Component Name
1	Air Conditioning Evaporator Module Drain Hose **Procedure** Pull back the passenger side carpet to gain access to the air conditioning evaporator module drain hose. **Caution:** Refer to *HVAC Module Drain Tube Caution on page 0-9*.

Heater Inlet Hose Replacement

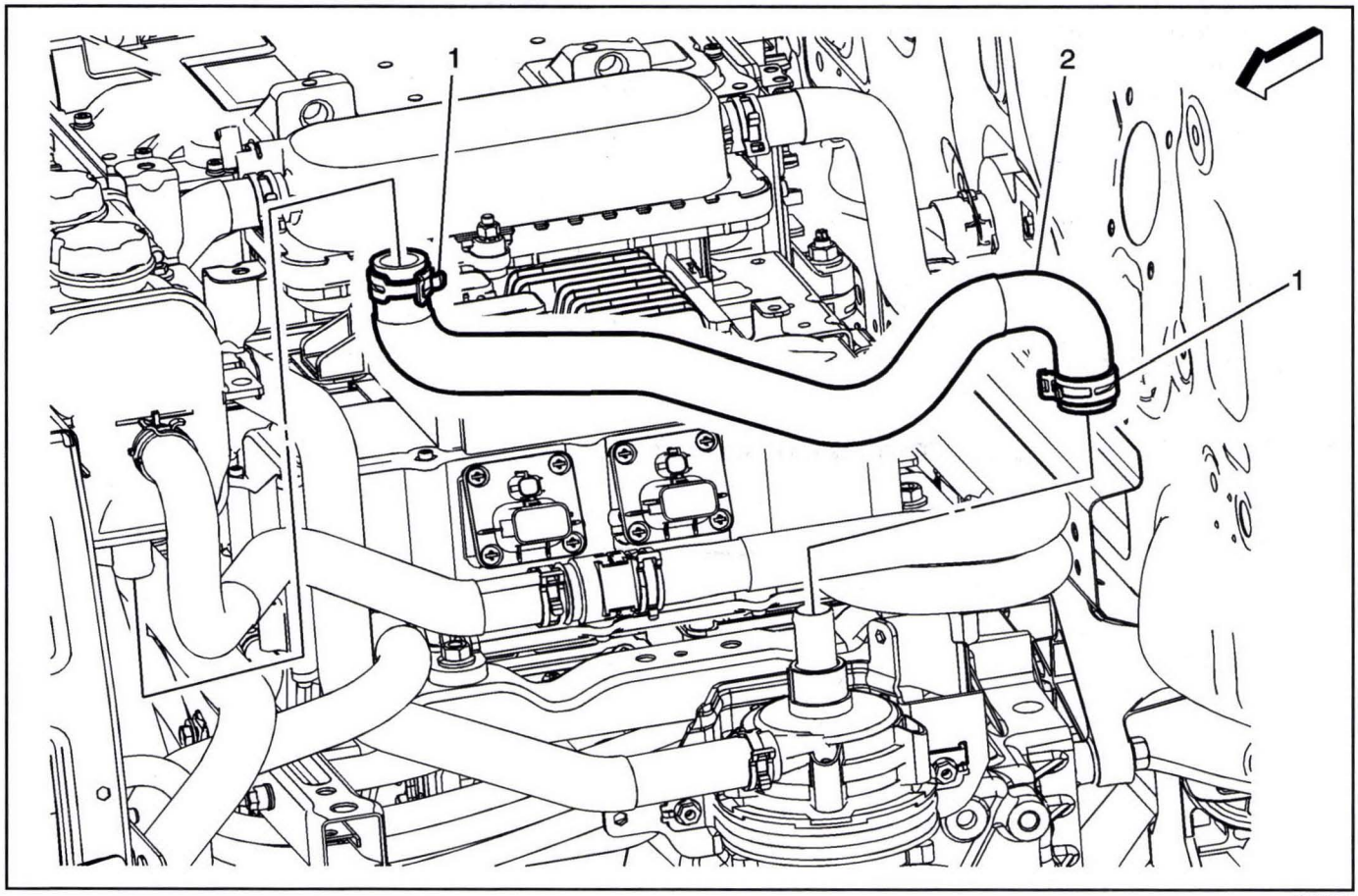

3239870

Heater Inlet Hose Replacement

Callout	Component Name
	Danger: Before conducting any repair to this high voltage cooling system, it is necessary to determine/verify whether no high-voltage system faults exist. If high-voltage faults exist, follow published DTC diagnostics/repair procedures prior to performing any cooling system repairs. Failure to correct High Voltage Faults before working on the high voltage cooling system could result in personal injury or death.

Preliminary Procedure

1. Turn vehicle power OFF and remove all keyless entry transmitters from the vehicle and secure in a place outside the vehicle.
2. Remove the front compartment sight shield. Refer to *Front Compartment Front Sight Shield Replacement on page 3-39*.
3. Remove the radiator surge tank clamp bracket for access to the heater inlet hose clamp at the surge tank. Refer to *Radiator Surge Tank Clamp Bracket Replacement (Right Side) on page 9-279* or *Radiator Surge Tank Clamp Bracket Replacement (Left Side) on page 9-280*.
4. Drain the cabin heater coolant heater system. Refer to *Heater Coolant Heater Draining and Filling on page 10-21*.

Heater Inlet Hose Replacement (cont'd)

Callout	Component Name
1	Heater Inlet Hose Clamp (Qty: 2) **Procedure** Reposition the heater inlet hose clamp using *BO-38185* Hose Clamp Pliers. **Special Tools** *BO-38185* Hose Clamp Pliers **Note:** Replace corroded hose clamps and brackets.
2	Heater Inlet Hose **Procedure** 1. Remove the retaining clip from the heater inlet hose. 2. After installation, fill the radiator surge tank to the fill level. 3. Inspect cooling system for leaks.

Auxiliary Heater Inlet Hose Replacement

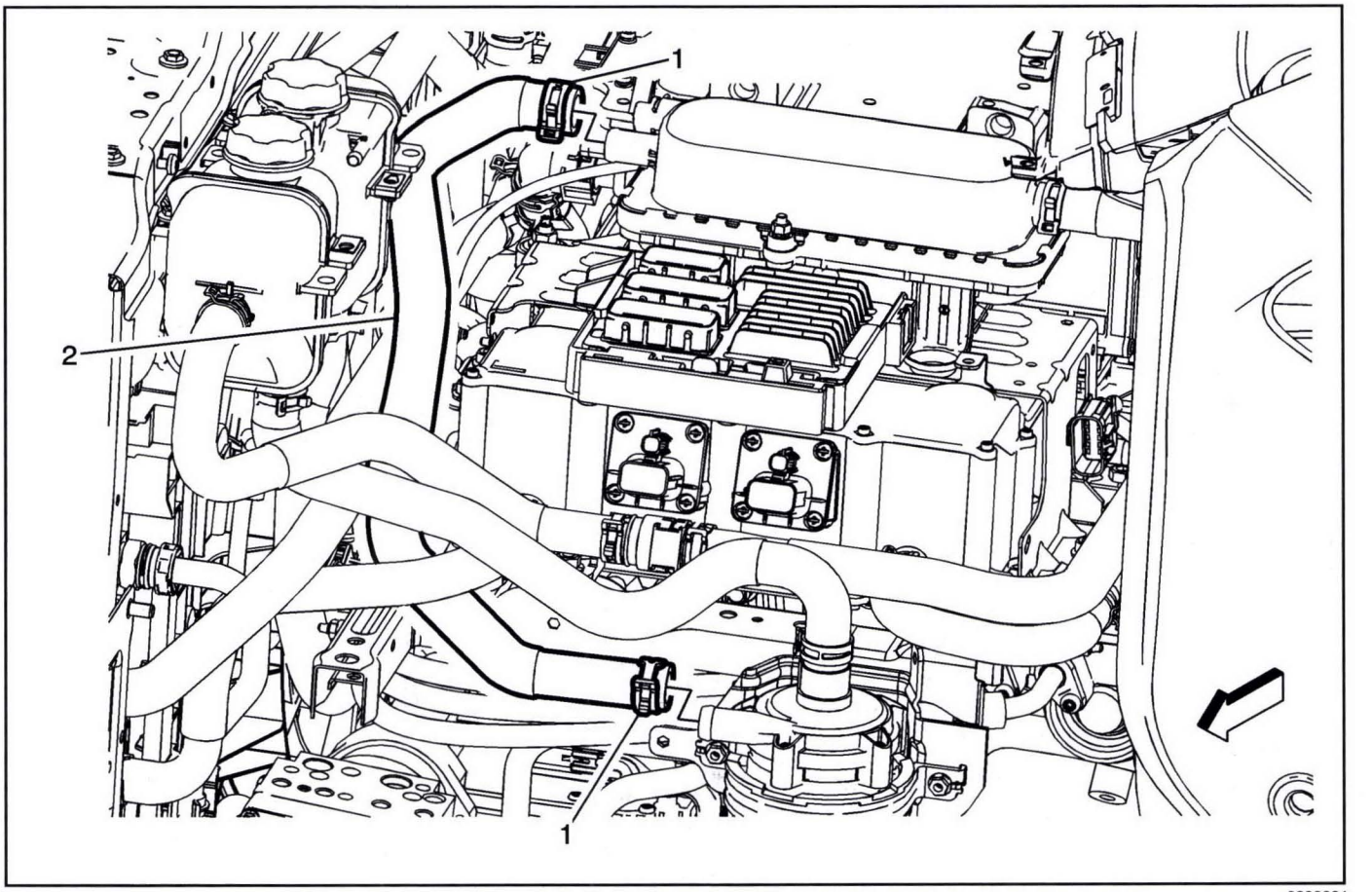

3239881

Auxiliary Heater Inlet Hose Replacement

Callout	Component Name
Danger: Before conducting any repair to this high voltage cooling system, it is necessary to determine/verify whether no high-voltage system faults exist. If high-voltage faults exist, follow published DTC diagnostics/repair procedures prior to performing any cooling system repairs. Failure to correct High Voltage Faults before working on the high voltage cooling system could result in personal injury or death. **Preliminary Procedure** 1. Turn vehicle power OFF and remove all keyless entry transmitters from the vehicle and secure in a place outside the vehicle. 2. Remove the high voltage disconnect circuit connector cover. Refer to *High Voltage Disconnect Circuit Connector Cover Replacement on page 9-174*. 3. Remove the left side front wheelhouse liner. Refer to *Front Wheelhouse Liner Replacement - Left Side on page 3-139*. 4. Drain the cabin heater coolant heater system. Refer to *Heater Coolant Heater Draining and Filling on page 10-21*.	
1	Auxiliary Heater Inlet Hose Clamp (Qty: 2) **Procedure** Reposition the auxiliary heater inlet hose clamps using *GE-47622* hose clamp pliers. **Special Tools** *GE-47622* Hose Clamp Pliers **Note:** Replace corroded hose clamps and brackets.
2	Auxiliary Heater Inlet Hose **Procedure** 1. After installation, fill the radiator surge tank to the fill level. Refer to *Heater Coolant Heater Draining and Filling on page 10-21*. 2. Inspect cooling system for leaks.

Auxiliary Heater Outlet Hose Replacement

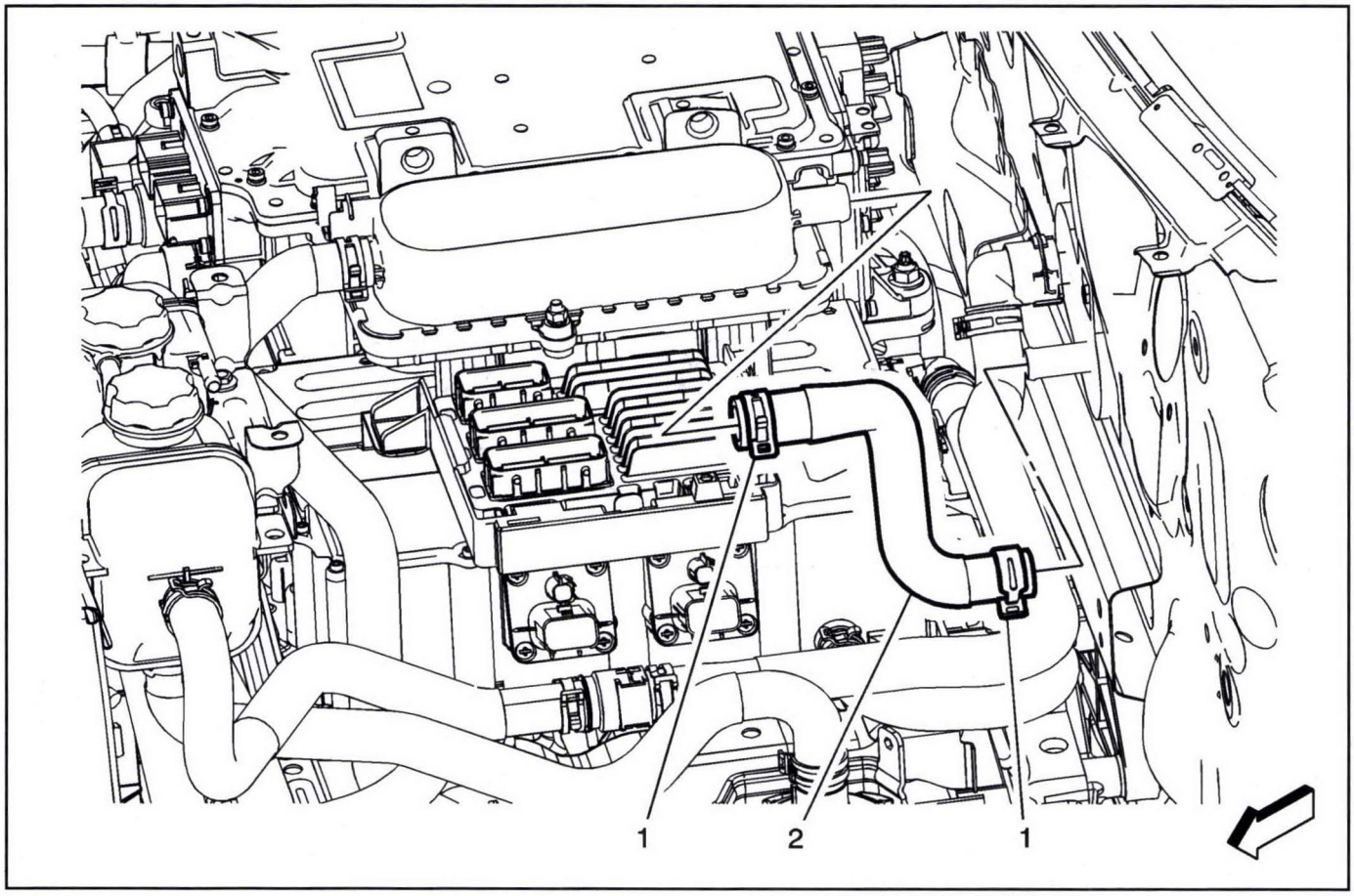

3239874

Auxiliary Heater Outlet Hose Replacement

Callout	Component Name
Danger: Before conducting any repair to this high voltage cooling system, it is necessary to determine/verify whether no high-voltage system faults exist. If high-voltage faults exist, follow published DTC diagnostics/repair procedures prior to performing any cooling system repairs. Failure to correct High Voltage Faults before working on the high voltage cooling system could result in personal injury or death. **Preliminary Procedure** 1. Turn vehicle power OFF and remove all keyless entry transmitters from the vehicle and secure in a place outside the vehicle. 2. Remove the high voltage disconnect circuit connector cover. Refer to *High Voltage Disconnect Circuit Connector Cover Replacement on page 9-174*. 3. Remove the driver motor battery charger to access the auxiliary heater outlet hose clamp at the HVAC module. Refer to *Drive Motor Battery Charger Replacement on page 9-649*. 4. Drain the cabin heater coolant heater system. Refer to *Heater Coolant Heater Draining and Filling on page 10-21*.	
1	Auxiliary Heater Outlet Hose Clamp (Qty: 2) **Procedure** Reposition the auxiliary heater outlet hose clamps using *BO-38185* Hose Clamp Pliers. **Special Tools** *BO-38185* Hose Clamp Pliers. **Note:** Replace corroded hose clamps and brackets.
2	Auxiliary Heater Outlet Hose **Procedure** 1. After installation, fill the radiator surge tank to the fill level. 2. Inspect cooling system for leaks.

Heater Inlet And Outlet Pipe Replacement

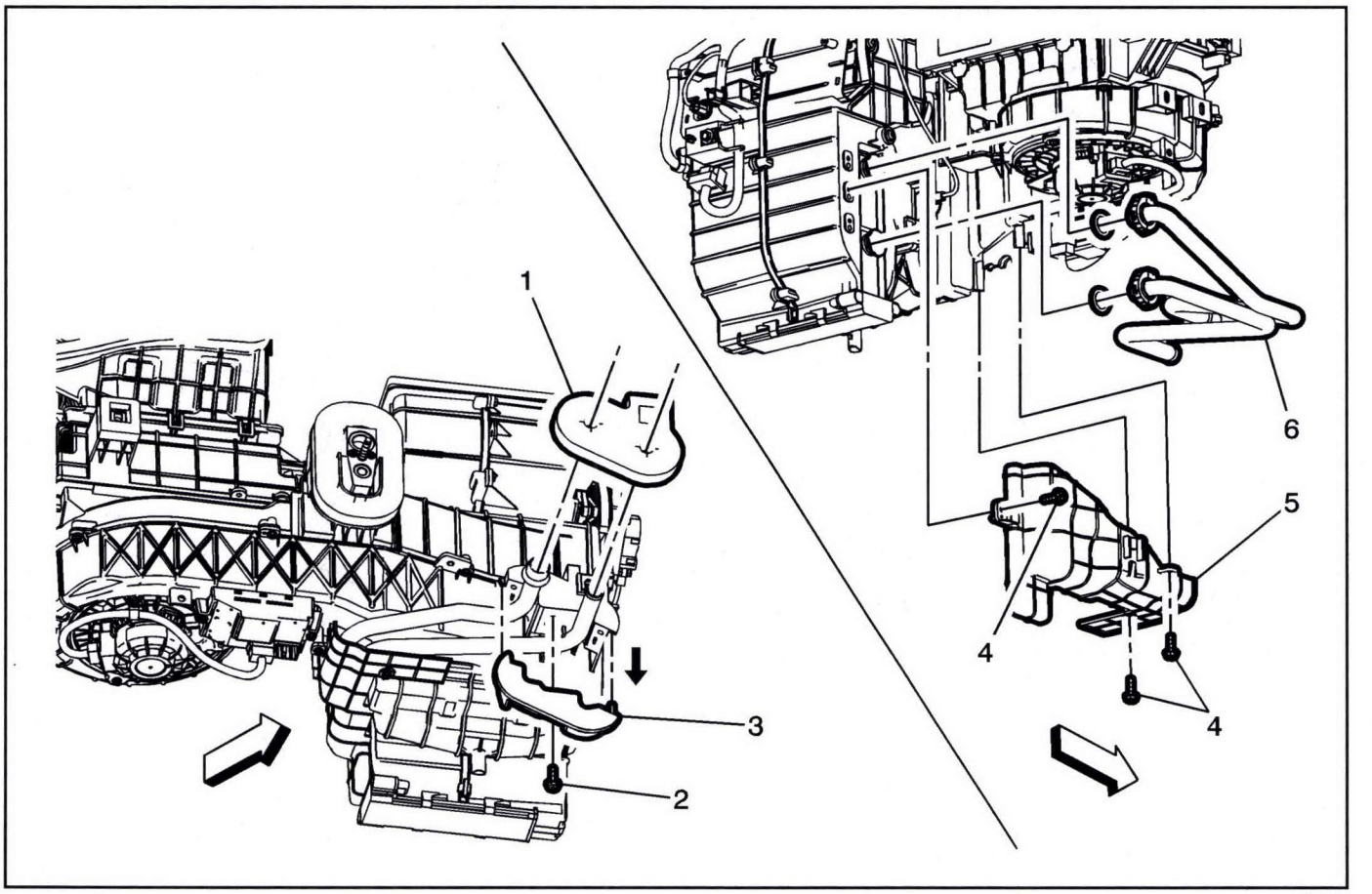

3220806

Heater Inlet And Outlet Pipe Replacement

Callout	Component Name
Preliminary Procedure Remove the heater and air conditioning evaporator and blower module assembly. Refer to *Heater and Air Conditioning Evaporator and Blower Module Removal and Installation on page 10-43*.	
1	Heater Core Inlet and Outlet Pipe Seal
2	Heater Core Inlet and Outlet Pipe Bracket Bolt **Caution:** Refer to *Fastener Caution on page 0-8*.
3	Heater Core Inlet and Outlet Pipe Bracket
4	Heater Core Pipe Side Cover Bolt (Qty: 3)
5	Heater Core Pipe Side Cover
6	Heater Core Inlet and Outlet Pipes **Procedure** 1. Remove the heater core inlet and outlet pipes for the heater core. 2. Remove and discard the old O-rings and replace with NEW O-rings.

Heater Outlet Hose Replacement

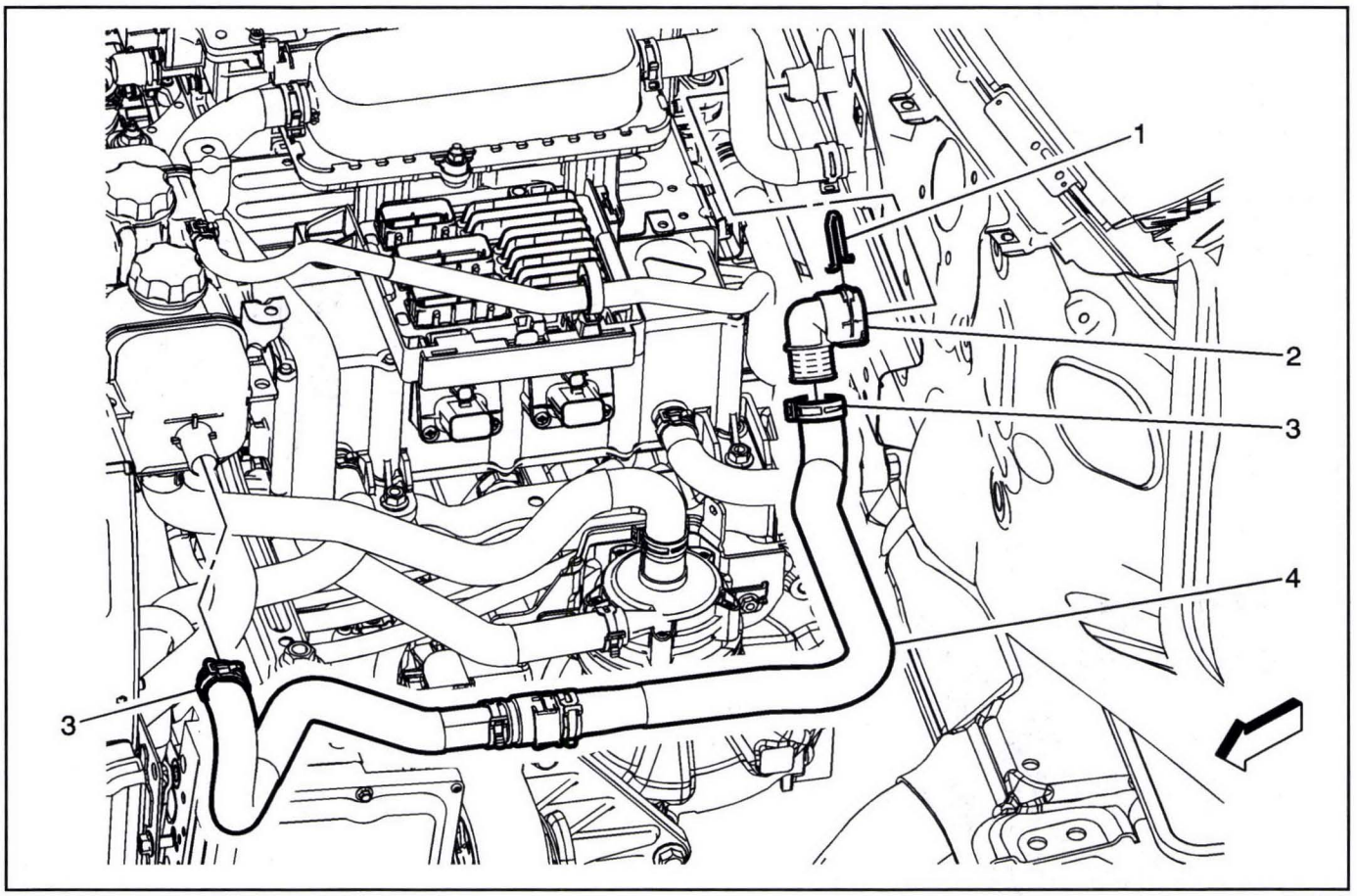

3239867

Heater Outlet Hose Replacement

Callout	Component Name
Danger: Before conducting any repair to this high voltage cooling system, it is necessary to determine/verify whether no high-voltage system faults exist. If high-voltage faults exist, follow published DTC diagnostics/repair procedures prior to performing any cooling system repairs. Failure to correct High Voltage Faults before working on the high voltage cooling system could result in personal injury or death. **Preliminary Procedure** 1. Turn vehicle power OFF and remove all keyless entry transmitters from the vehicle and secure in a place outside the vehicle. 2. Disable the high voltage system. Refer to *High Voltage Disabling on page 9-363*. 3. Remove the high voltage disconnect circuit connector cover. Refer to *High Voltage Disconnect Circuit Connector Cover Replacement on page 9-174*. 4. Disconnect the heater coolant heater electrical connector and accessory DC power control module electrical connector from the voltage battery disconnect control module module. Refer to *High Voltage Battery Disconnect Control Module Module Replacement (with quick charge) on page 9-175* or *High Voltage Battery Disconnect Control Module Module Replacement (without quick charge) on page 9-179*. 5. Drain the cabin heater coolant heater system. Refer to *Heater Coolant Heater Draining and Filling on page 10-21*.	
1	Heater Outlet Hose Connector Retainer **Procedure** Remove the heater outlet hose retainer.
2	Heater Outlet Hose Connector
3	Heater Outlet Hose Clamp (Qty: 2) **Procedure** Reposition the heater outlet hose clamp using *BO-38185* hose clamp pliers. **Special Tools** *BO-38185* Hose Clamp Pliers **Note:** Replace corroded hose clamps and brackets.
4	Heater Outlet Hose **Procedure** 1. Remove the retaining clip from the heater inlet hose. 2. After installation, fill the radiator surge tank to the fill level. 3. Inspect cooling system for leaks. 4. Enable the high voltage system. Refer to *High Voltage Enabling on page 9-367*.

Heater Coolant Pump Replacement

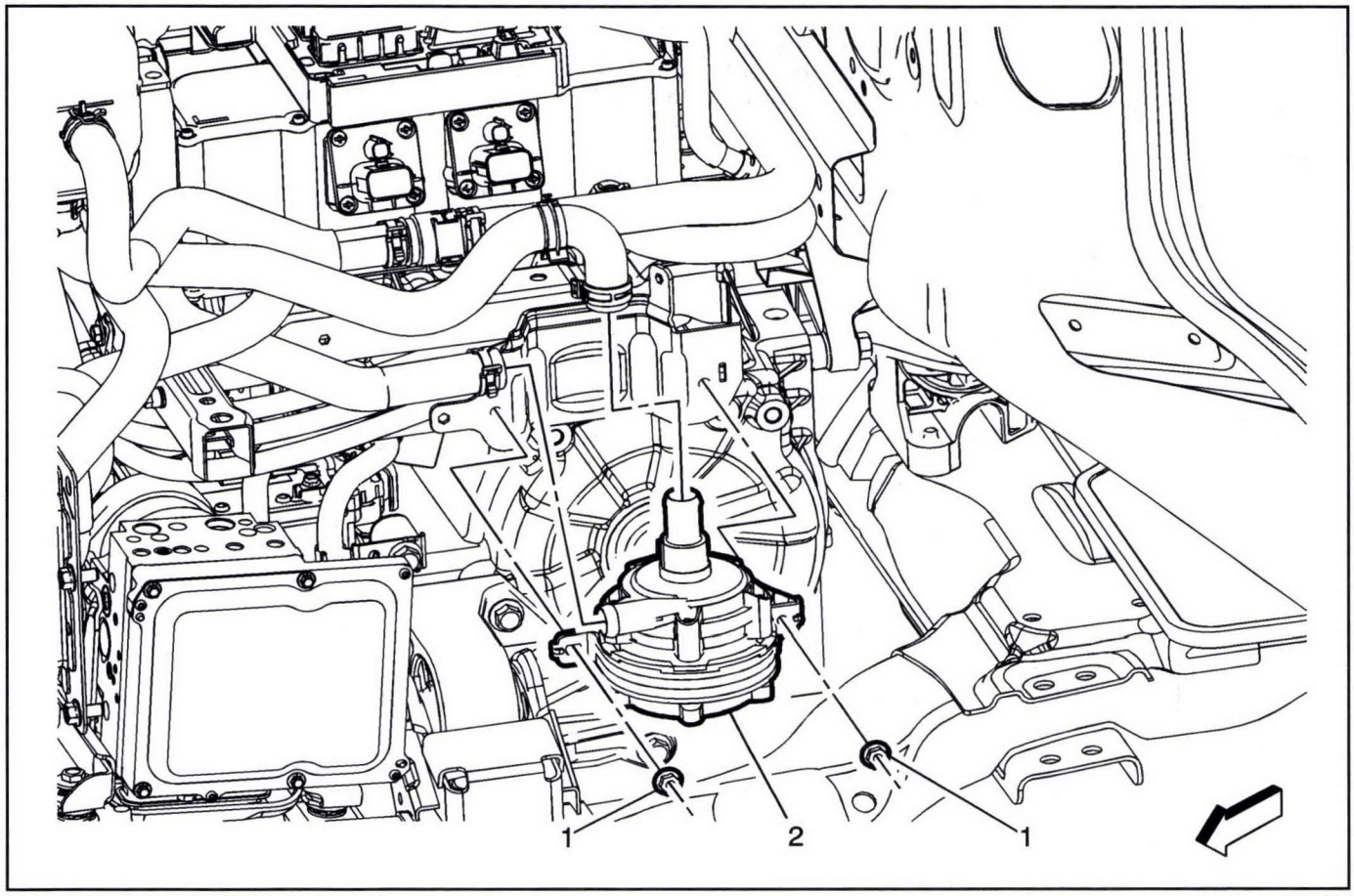

3239863

Heater Coolant Pump Replacement

Callout	Component Name
Danger: Before conducting any repair to this high voltage cooling system, it is necessary to determine/verify whether no high-voltage system faults exist. If high-voltage faults exist, follow published DTC diagnostics/repair procedures prior to performing any cooling system repairs. Failure to correct High Voltage Faults before working on the high voltage cooling system could result in personal injury or death.	
	Preliminary Procedure 1. Turn vehicle power OFF and remove all keyless entry transmitters from the vehicle and secure in a place outside the vehicle. 2. Drain the cabin heater coolant heater system. Refer to *Heater Coolant Heater Draining and Filling on page 10-21*. 3. Remove the auxiliary heater inlet hose from the heater coolant pump. Refer to *Auxiliary Heater Inlet Hose Replacement on page 10-51*. 4. Remove the heater inlet hose from the heater coolant pump. Refer to *Heater Inlet Hose Replacement on page 10-50*. 5. Remove the electrical connector from the heater coolant pump.
1	Heater Coolant Pump Nut (Qty: 2) **Caution:** Refer to *Fastener Caution on page 0-8*. **Tighten** 9 N•m (80 lb in)
2	Heater Coolant Pump **Procedure** 1. After installation, fill the radiator surge tank to the fill level. Refer to *Drive Motor Generator Power Inverter Module Cooling System Draining and Filling on page 9-264*. 2. Inspect cooling system for leaks.

Passenger Compartment Air Filter Replacement

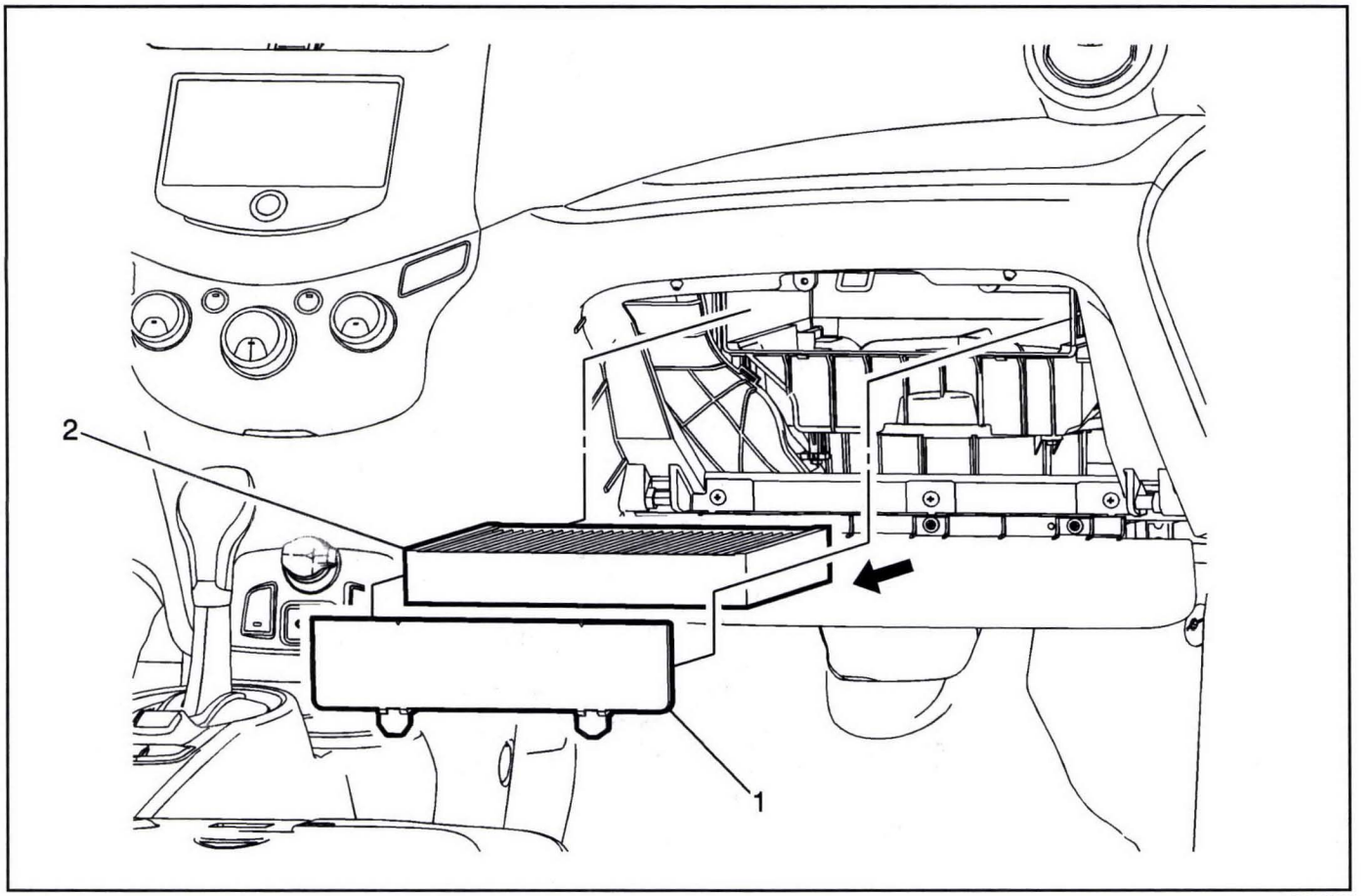

3136578

Passenger Compartment Air Filter Replacement

Callout	Component Name
Preliminary Procedure Remove instrument panel compartment. Refer to *Instrument Panel Compartment Replacement on page 2-29*.	
1	Passenger Compartment Air Filter Cover
2	Passenger Compartment Air Filter

Air Inlet Assembly Replacement

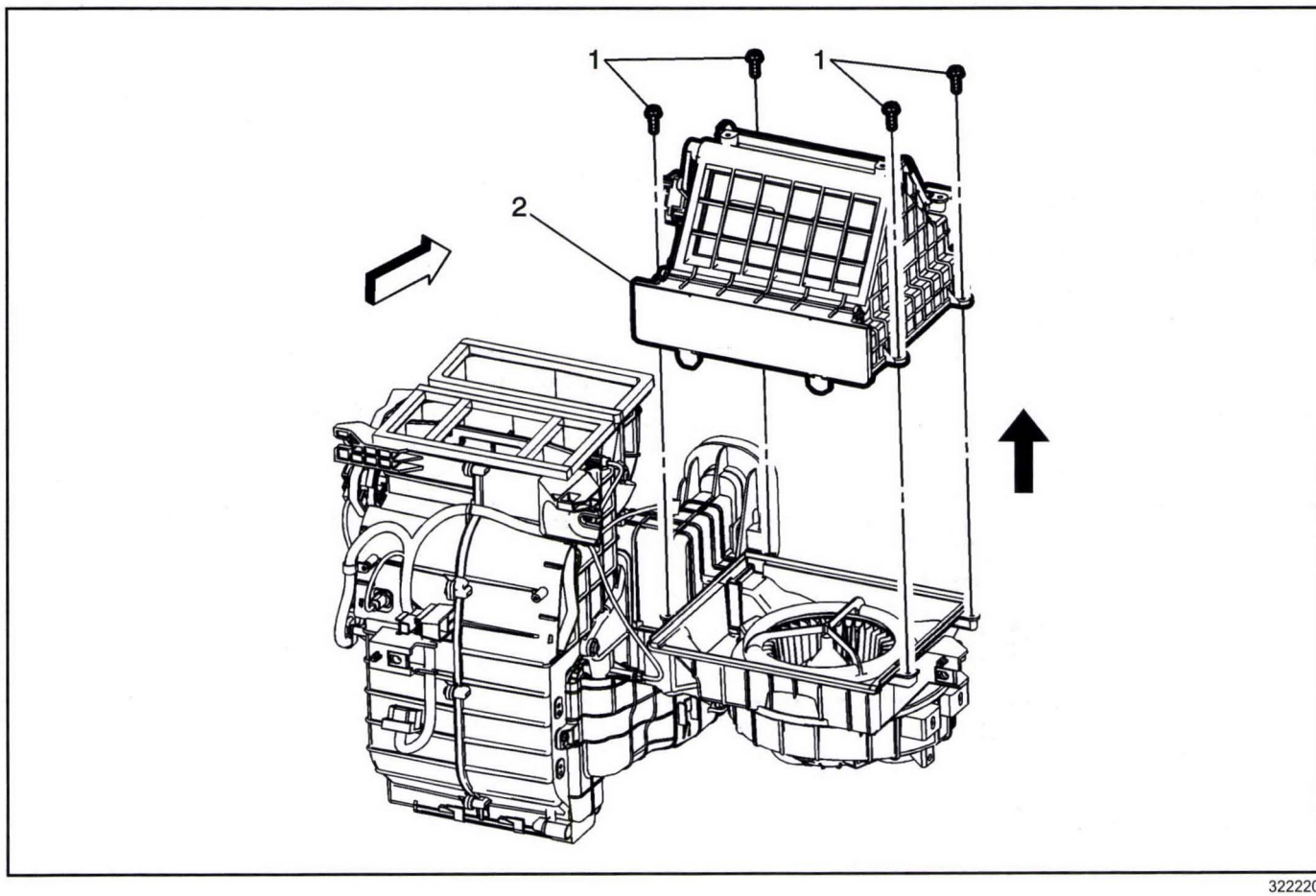

3222202

Air Inlet Assembly Replacement

Callout	Component Name
Preliminary Procedures 1. Remove the instrument panel trim pad. Refer to *Instrument Panel Trim Pad Replacement on page 2-31*. 2. Remove the air inlet housing. Refer to *Air Inlet Housing Replacement on page 10-59*. 3. From within the engine compartment, remove the right side bolt securing the HVAC module assembly to the cowl panel. Refer to *Heater and Air Conditioning Evaporator and Blower Module Removal and Installation on page 10-43*.	
1	Air Inlet Assembly Bolt (Qty: 4) **Caution:** Refer to *Fastener Caution on page 0-8*.
2	Air Inlet Assembly **Procedure** Transfer the components as necessary.

Air Inlet Housing Replacement

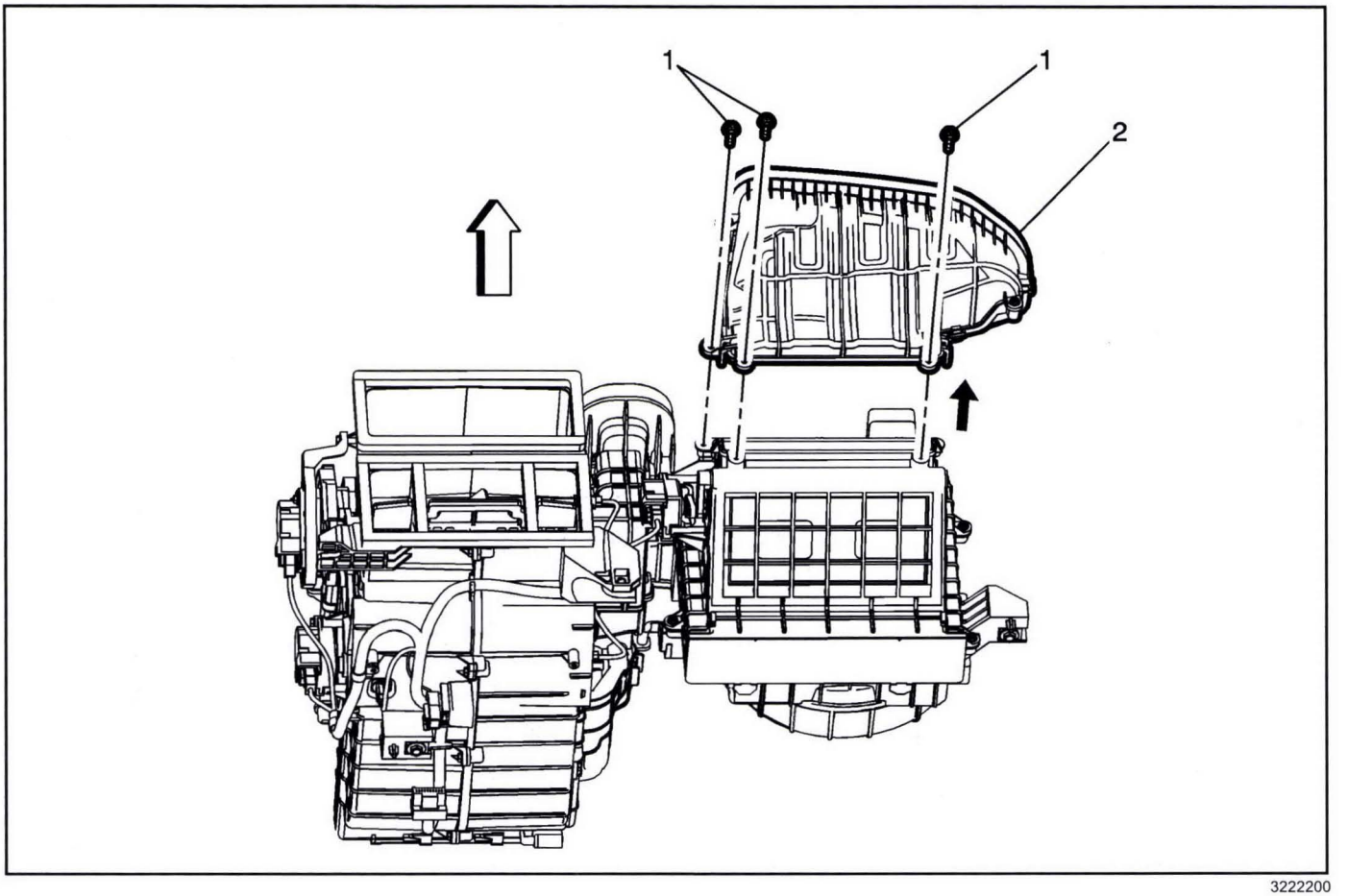

3222200

Air Inlet Housing Replacement

Callout	Component Name
Preliminary Procedure Remove the instrument panel trim pad. Refer to *Instrument Panel Trim Pad Replacement on page 2-31*.	
1	Air Inlet Housing Bolt (Qty: 3) **Caution:** Refer to *Fastener Caution on page 0-8*.
2	Air Inlet Housing

Blower Motor Control Replacement

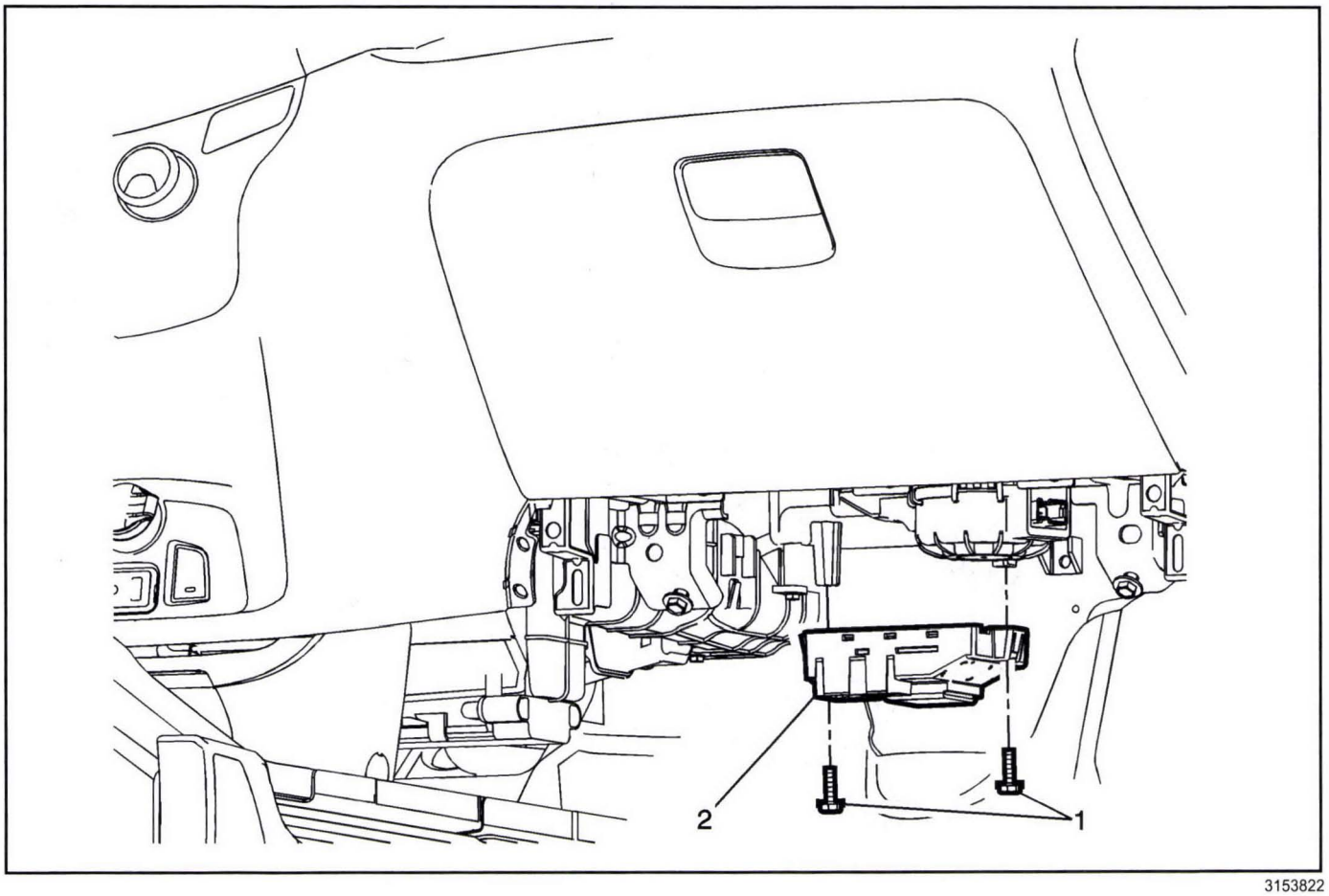

3153822

Blower Motor Control Replacement

Callout	Component Name
Preliminary Procedure Disconnect the battery negative cable. Refer to *Battery Negative Cable Disconnection and Connection on page 9-20*.	
1	Blower Motor Control Bolt (Qty: 2) **Caution:** Refer to *Fastener Caution on page 0-8*.
2	Blower Motor Control **Procedure** Disconnect the blower motor control electrical connector.

Blower Motor Replacement

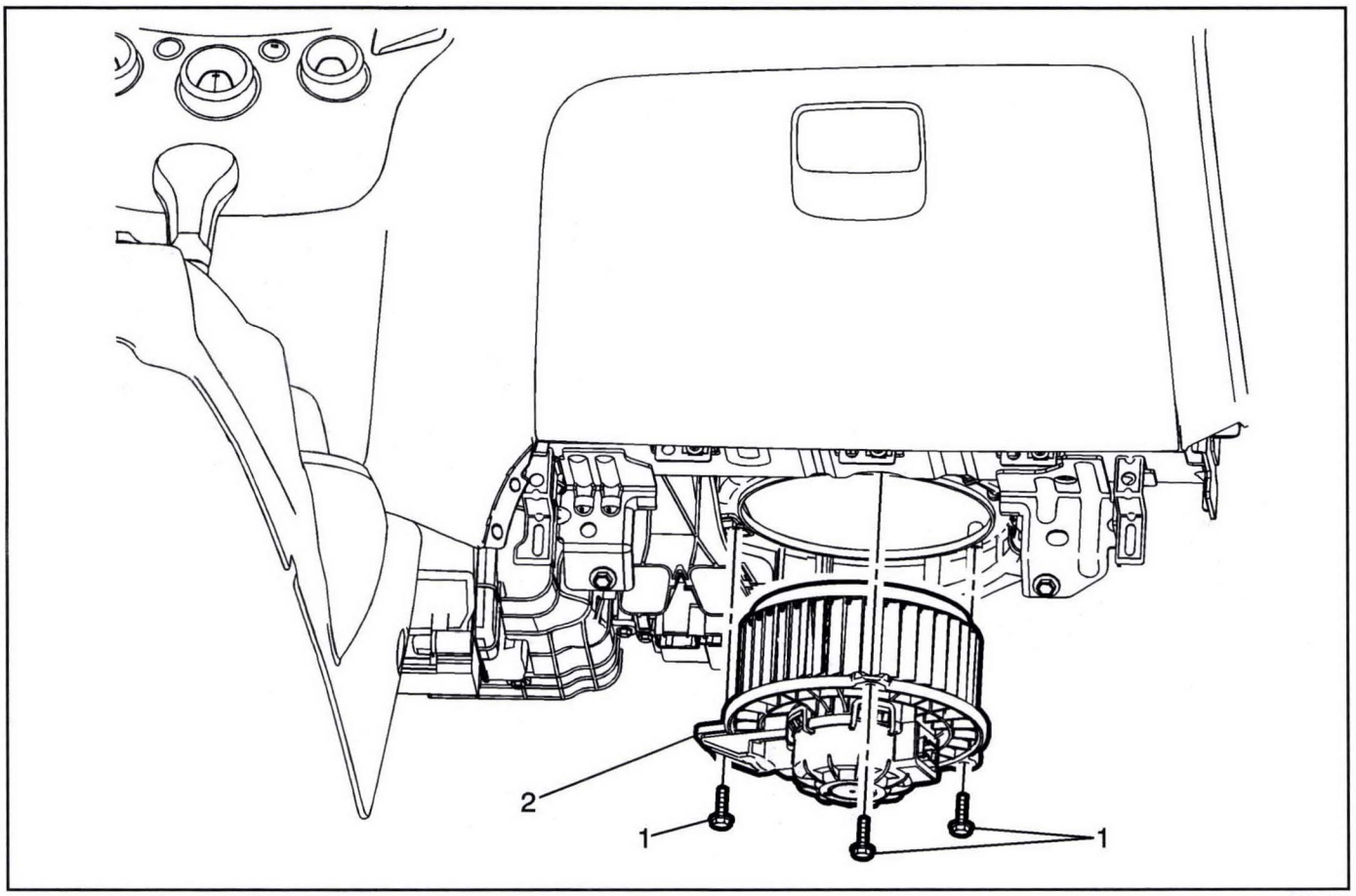

3166200

Blower Motor Replacement

Callout	Component Name
Preliminary Procedures 1. Disconnect the battery negative cable. Refer to *Battery Negative Cable Disconnection and Connection on page 9-20*. 2. Remove the inflatable restraint instrument panel lower module. Refer to *Instrument Panel Lower Airbag Replacement - Passenger Side on page 12-161*.	
1	Blower Motor Bolt (Qty: 3) **Caution:** Refer to *Fastener Caution on page 0-8*.
2	Blower Motor **Procedure** Disconnect the blower motor electrical connector.

Air Distributor Case Replacement

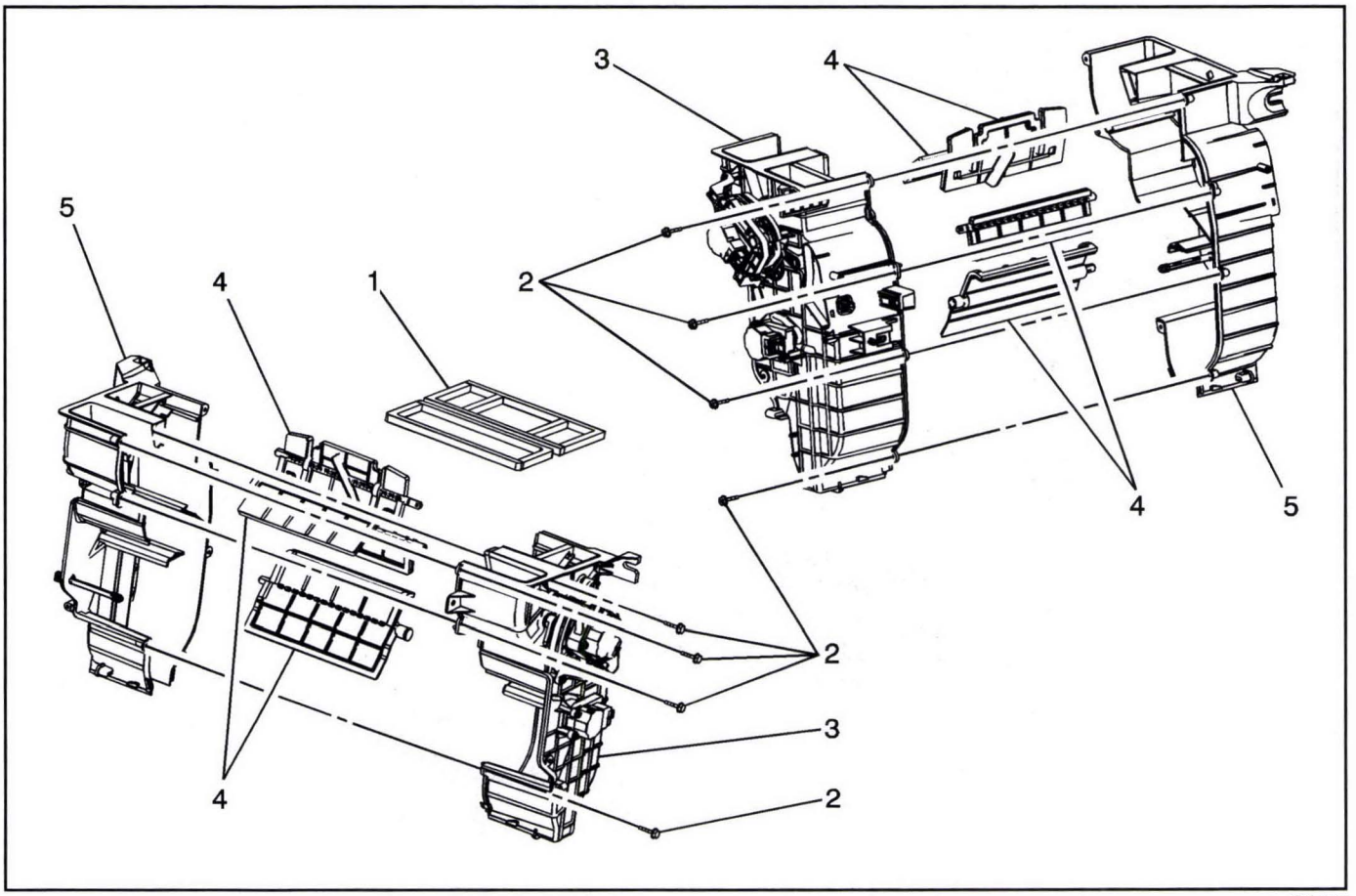

3224142

Air Distributor Case Replacement

Callout	Component Name
Preliminary Procedures 1. Remove the heater and air conditioning evaporator and blower upper case. Refer to *Heater and Air Conditioning Evaporator and Blower Upper Case Replacement on page 10-46*. 2. Remove the heater core assembly. Refer to *Heater Core Replacement on page 10-73*.	
1	Air Distributor Seal
2	Air Distributor Case Bolt (Qty: 8) **Caution:** Refer to *Fastener Caution on page 0-8*.
3	Air Distributor Case — Left Side **Procedures** 1. Separate the left side from the right side air distributor case. 2. Transfer the components as necessary.
4	Mode Valve (Qty: 4) **Procedure** Inspect the mode valves and replace the needed mode valve as necessary.
5	Air Distributor Case — Right Side **Procedure** Transfer the components as necessary.

Instrument Panel Outer Air Outlet Replacement - Left Side

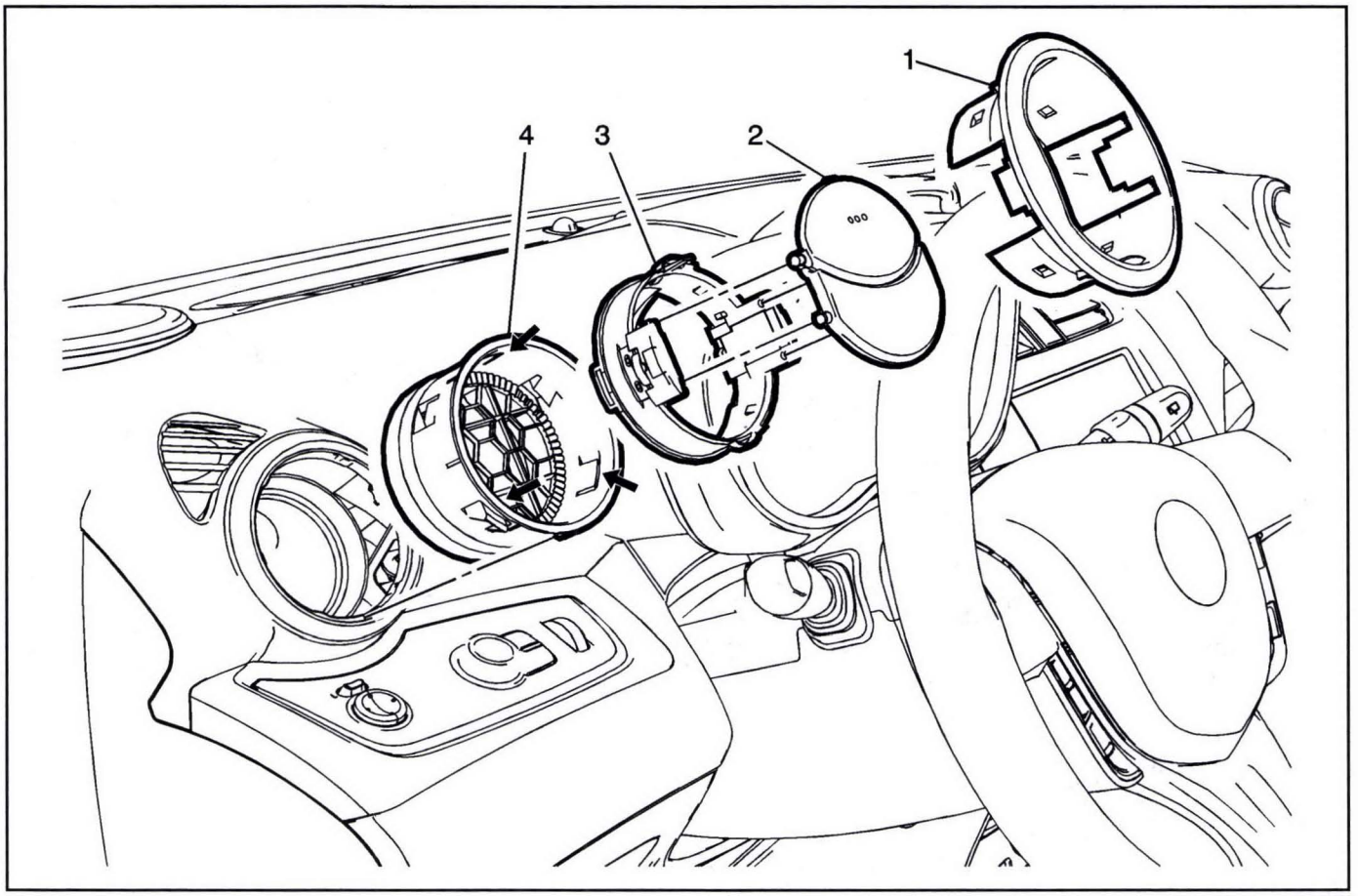

2941336

Instrument Panel Outer Air Outlet Replacement - Left Side

Callout	Component Name
1	Inner Air Outlet Nozzle **Procedure** Use a flat bladed plastic trim tool in order to release the inner air outlet nozzle from the instrument panel outer air outlet assembly.
2	Air Outlet Cover
3	Outer Air Outlet Nozzle
4	Air Outlet Nozzle Housing **Procedure** Use a suitable tool to release the tabs that secure the air outlet nozzle housing to the instrument panel assembly.

Instrument Panel Center Air Outlet Replacement

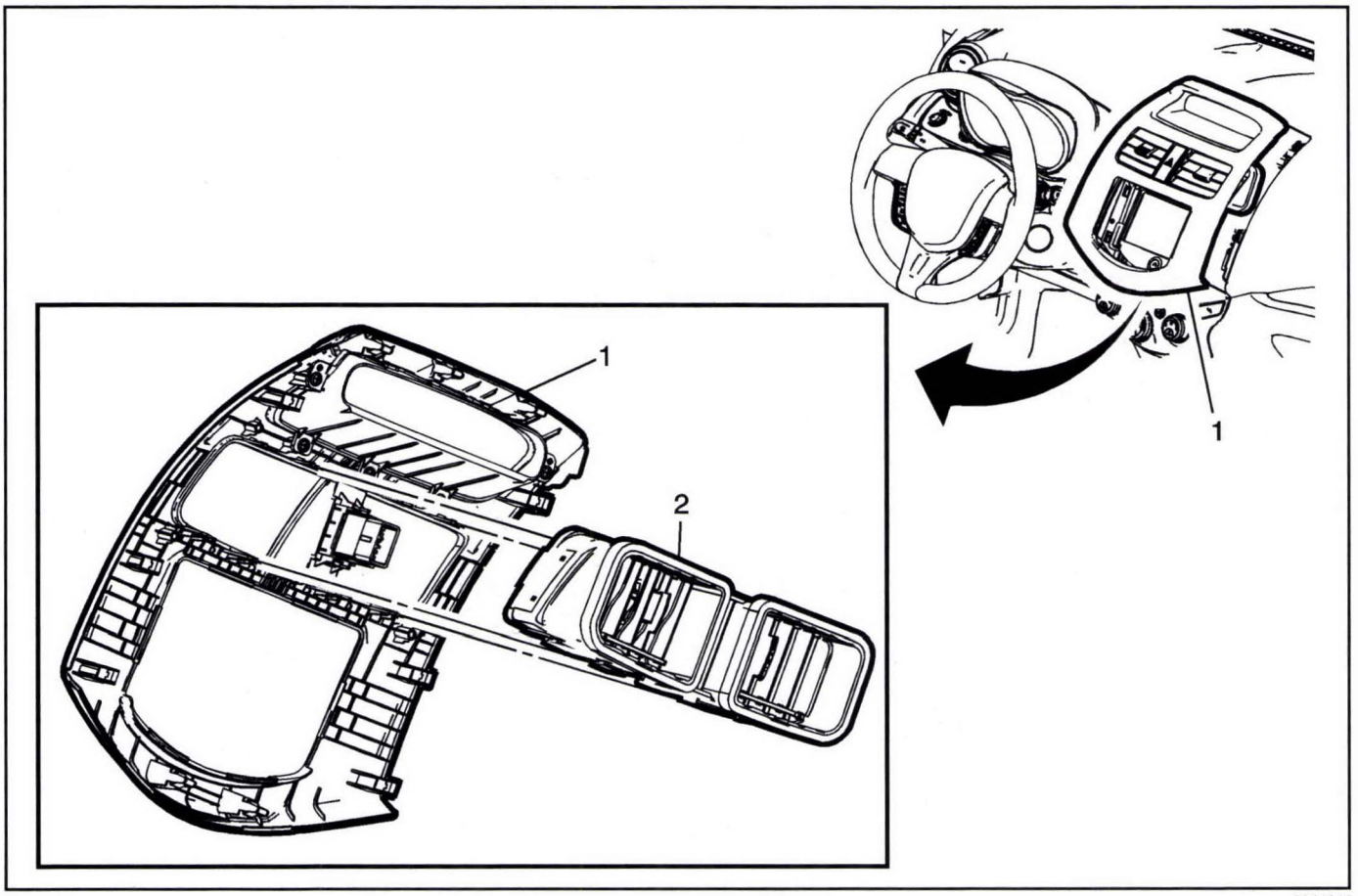

2941812

Instrument Panel Center Air Outlet Replacement

Callout	Component Name
1	Instrument Panel Center Trim Plate Applique Refer to *Instrument Panel Center Trim Plate Applique Replacement on page 2-25.*
2	Instrument Panel Center Air Outlet **Procedure** Unsnap the instrument panel center air outlet from the instrument panel center trim plate applique.

Instrument Panel Outer Air Outlet Replacement - Right Side

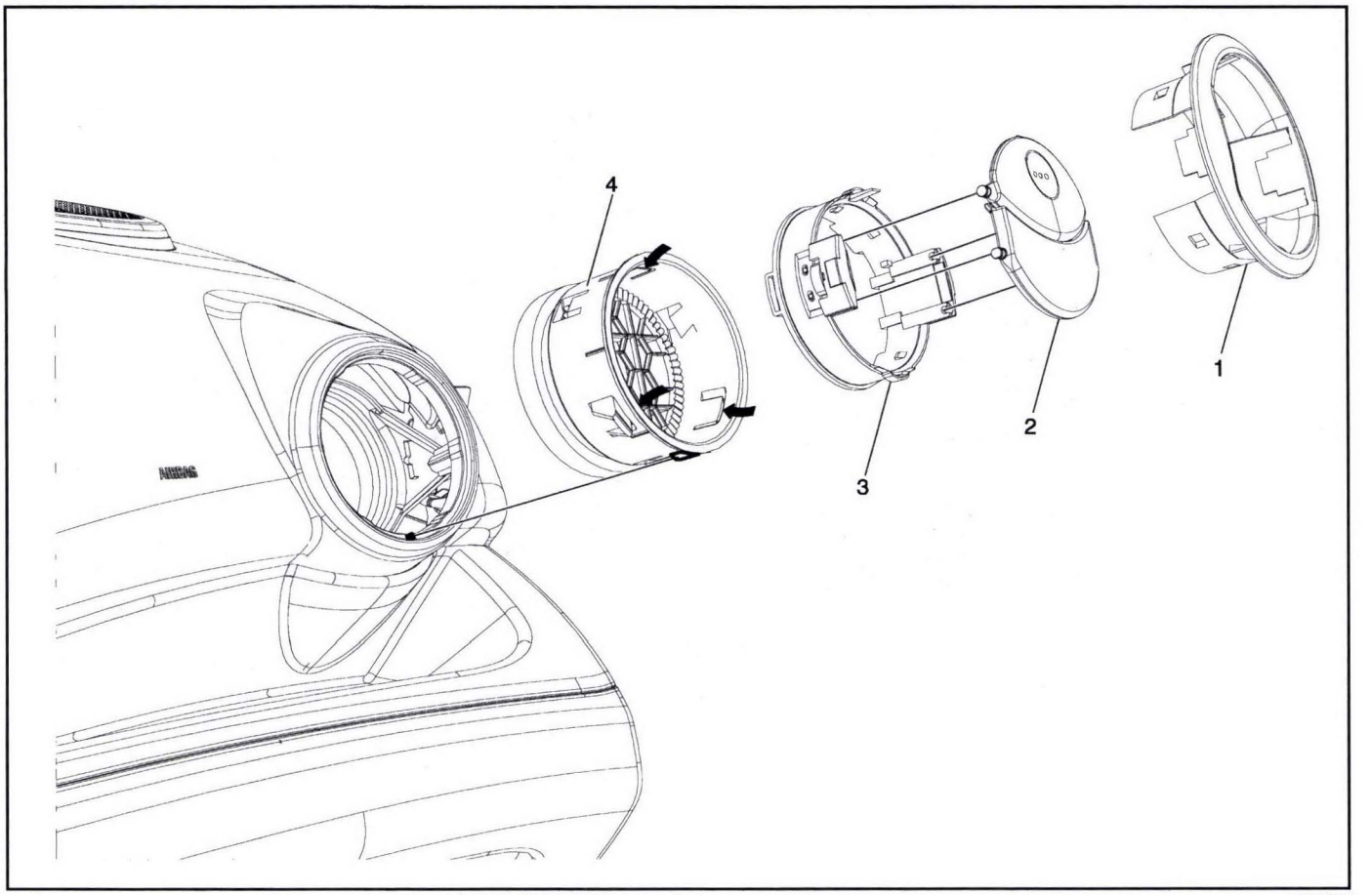

2327767

Instrument Panel Outer Air Outlet Replacement - Right Side

Callout	Component Name
1	Inner Air Outlet Nozzle **Procedure** Use a flat bladed plastic trim tool in order to release the inner air outlet nozzle from the instrument panel outer air outlet assembly.
2	Air Outlet Cover
3	Outer Air Outlet Nozzle
4	Air Outlet Nozzle Housing **Procedure** Use a suitable tool to release the tabs that secure the air outlet nozzle housing to the instrument panel assembly.

Instrument Panel Center Air Outlet Duct Replacement

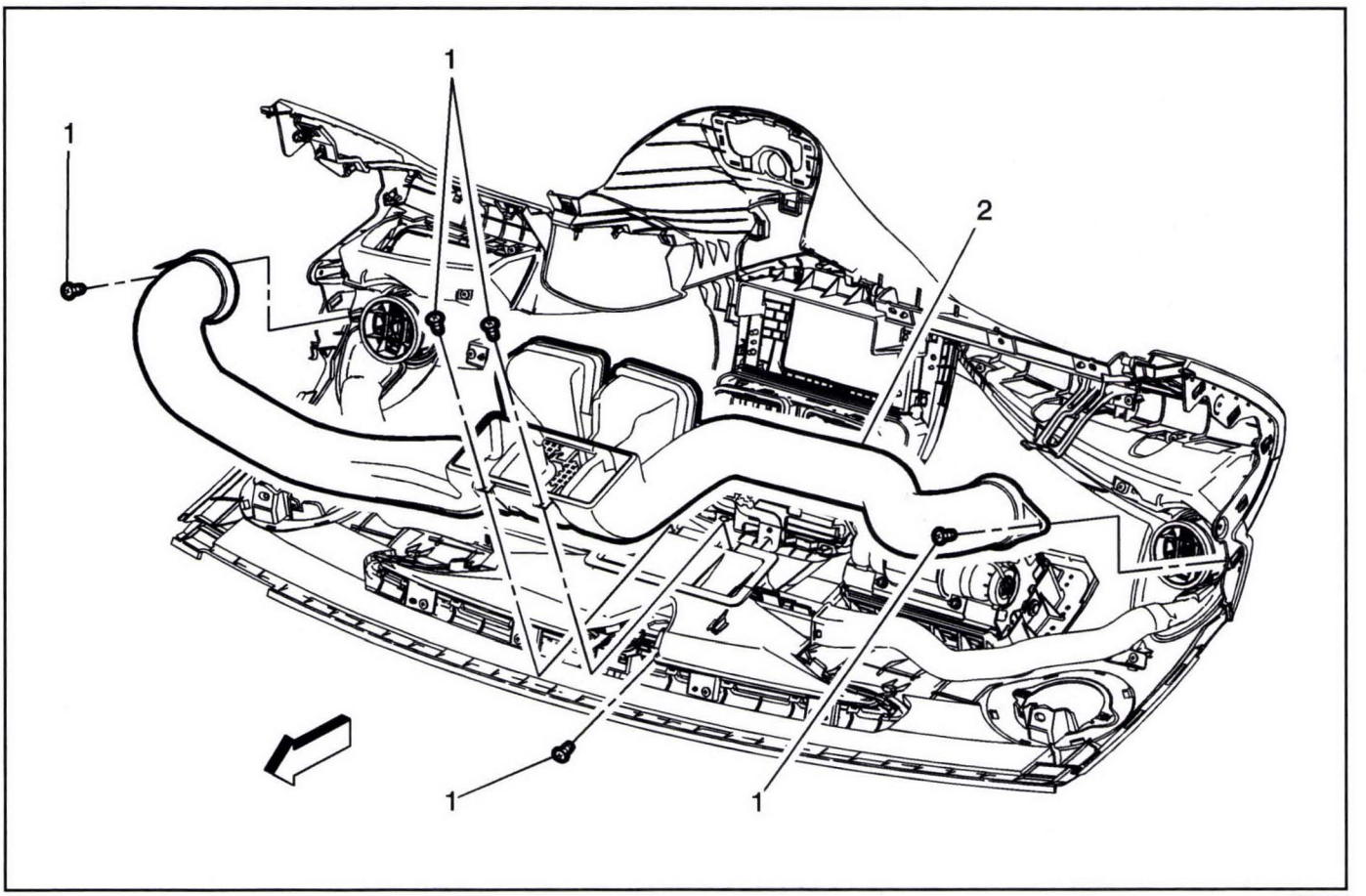

3217409

Instrument Panel Center Air Outlet Duct Replacement

Callout	Component Name
Preliminary Procedure Remove the instrument panel trim pad. Refer to *Instrument Panel Trim Pad Replacement on page 2-31*.	
1	Instrument Panel Center Air Outlet Duct Fastener (Qty: 5) **Caution:** Refer to *Fastener Caution on page 0-8*.
2	Instrument Panel Center Air Outlet Duct

Windshield Defroster Outlet Duct Replacement

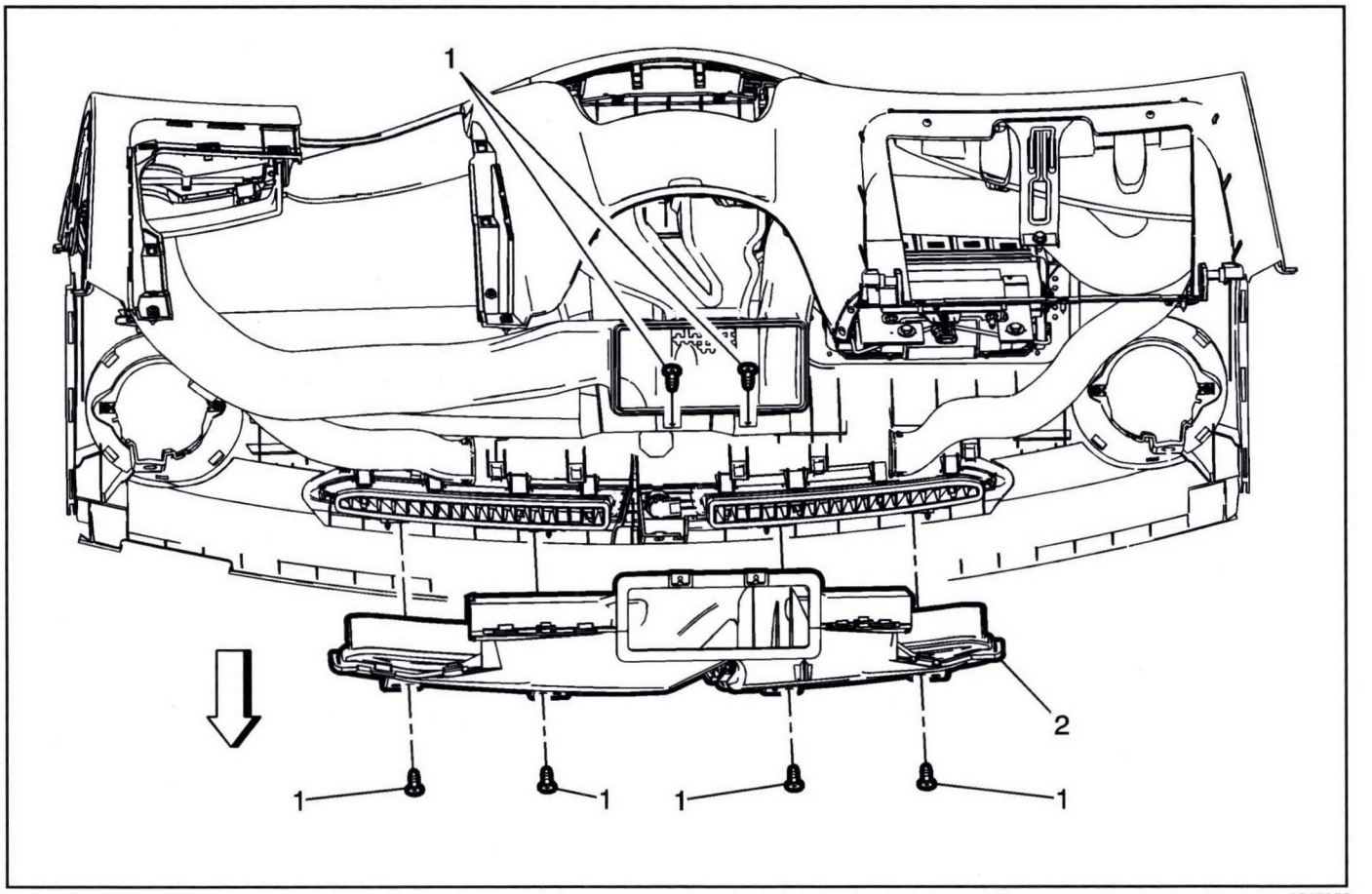

3217056

Windshield Defroster Outlet Duct Replacement

Callout	Component Name
Preliminary Procedure Remove the instrument panel trim pad. Refer to *Instrument Panel Trim Pad Replacement on page 2-31*.	
1	Windshield Defroster Outlet Duct Fastener (Qty: 6) **Caution:** Refer to *Fastener Caution on page 0-8*.
2	Windshield Defroster Outlet Duct **Procedure** Un-snap the left and right side window defogger outlet ducts from the windshield defroster outlet duct.

Windshield Defroster Nozzle Grille Replacement

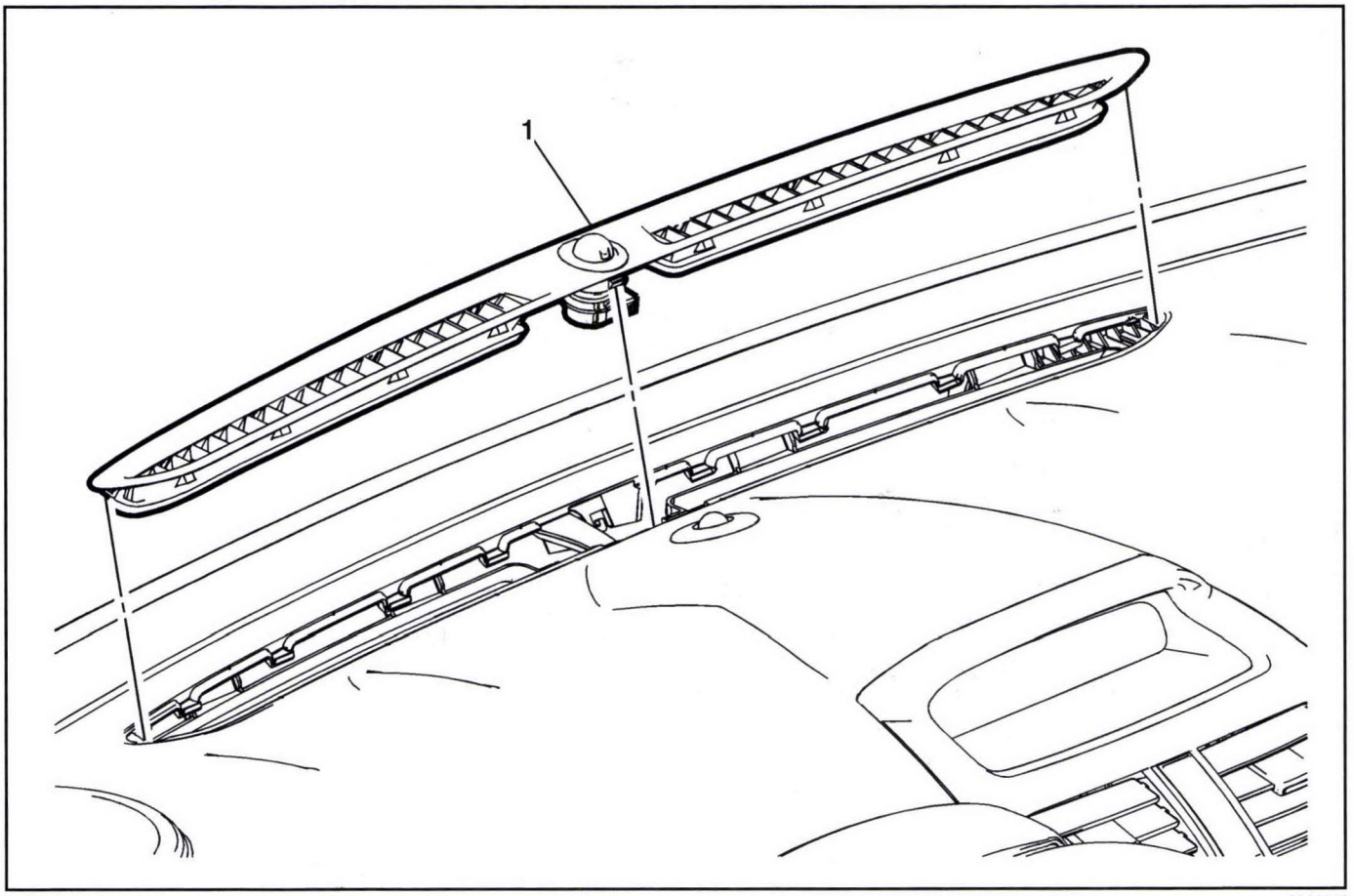

2939859

Windshield Defroster Nozzle Grille Replacement

Callout	Component Name
1	Windshield Defroster Nozzle Grille **Procedures** 1. Use a flat bladed plastic trim tool in order to release the tabs securing the windshield defroster nozzle grille to the instrument panel assembly. 2. Disconnect the electrical connection. 3. Transfer components as necessary.

Side Window Defogger Outlet Duct Replacement - Left Side

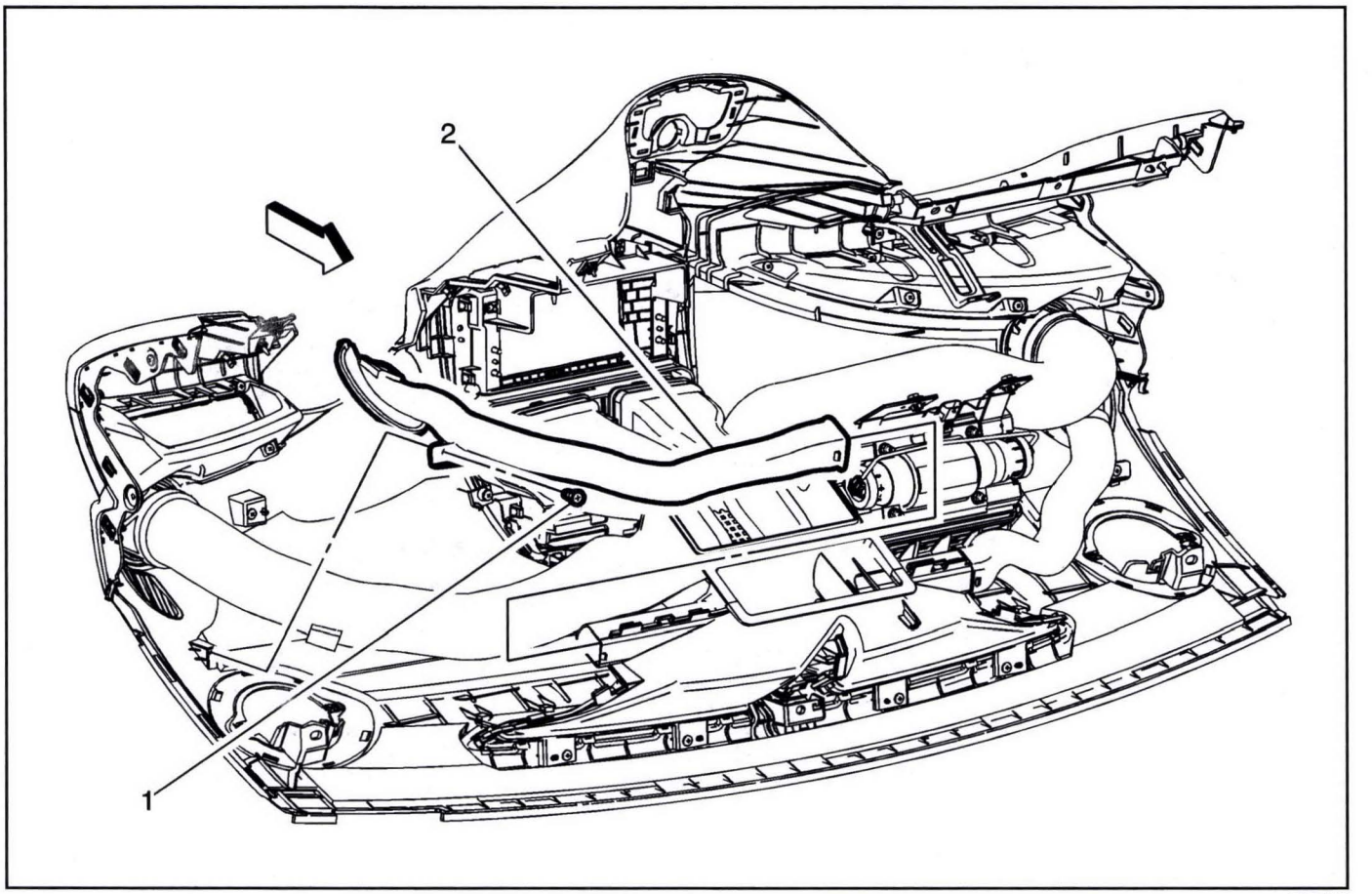

3217053

Side Window Defogger Outlet Duct Replacement - Left Side

Callout	Component Name
Preliminary Procedure Remove the instrument panel trim pad. Refer to *Instrument Panel Trim Pad Replacement on page 2-31*.	
1	Side Window Defogger Outlet Duct Fastener **Caution:** Refer to *Fastener Caution on page 0-8*.
2	Side Window Defogger Outlet Duct — Left Side **Procedure** Un-snap the left side window defogger outlet duct from the windshield defroster outlet duct.

Side Window Defogger Outlet Duct Replacement - Right Side

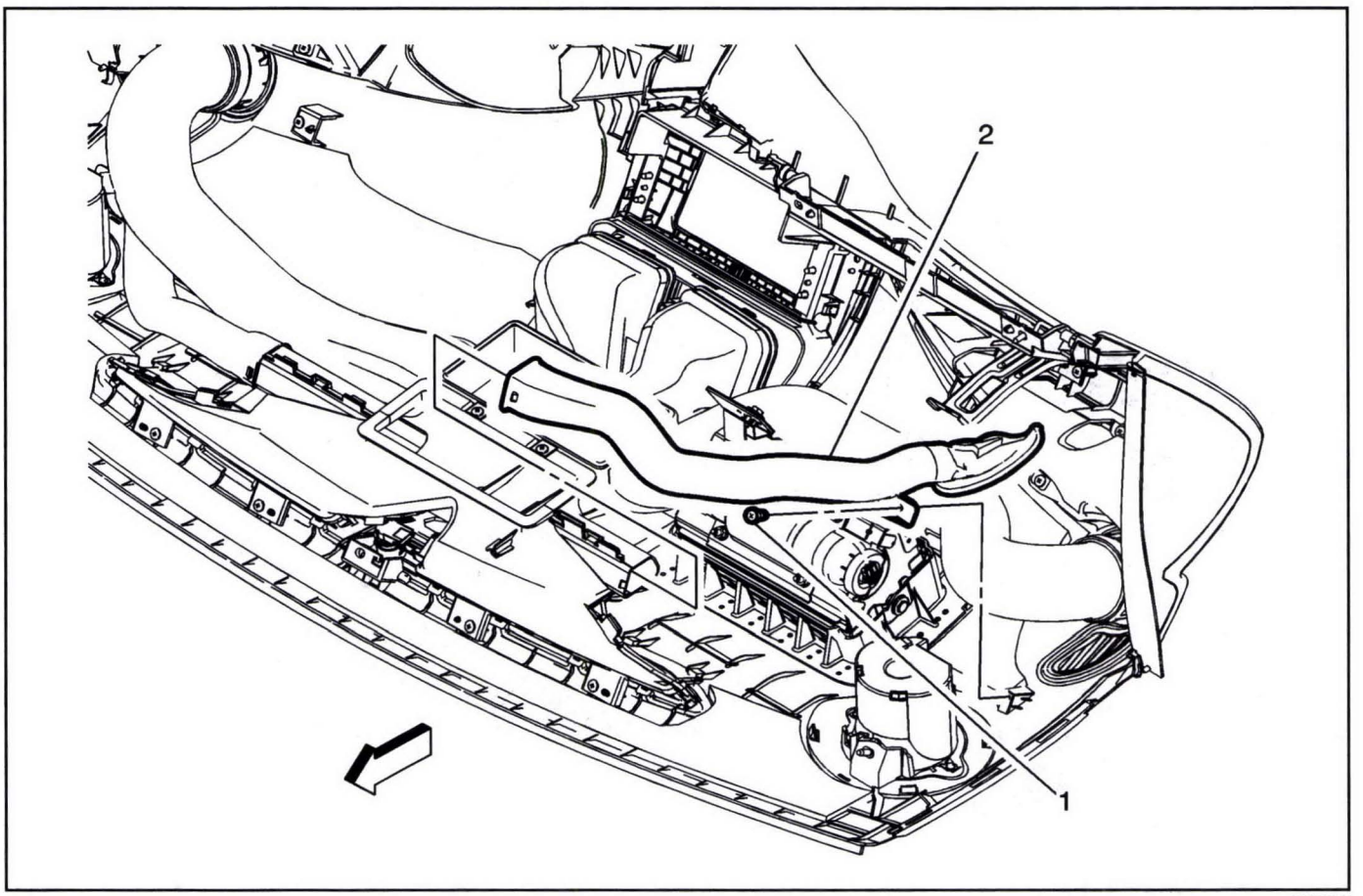

3217054

Side Window Defogger Outlet Duct Replacement - Right Side

Callout	Component Name
Preliminary Procedure Remove the instrument panel trim pad. Refer to *Instrument Panel Trim Pad Replacement on page 2-31*.	
1	Side Window Defogger Outlet Duct Fastener **Caution:** Refer to *Fastener Caution on page 0-8*.
2	Side Window Defogger Outlet Duct — Right Side **Procedure** Un-snap the right side window defogger outlet duct from the windshield defroster outlet duct.

Floor Air Outlet Duct Replacement - Left Side

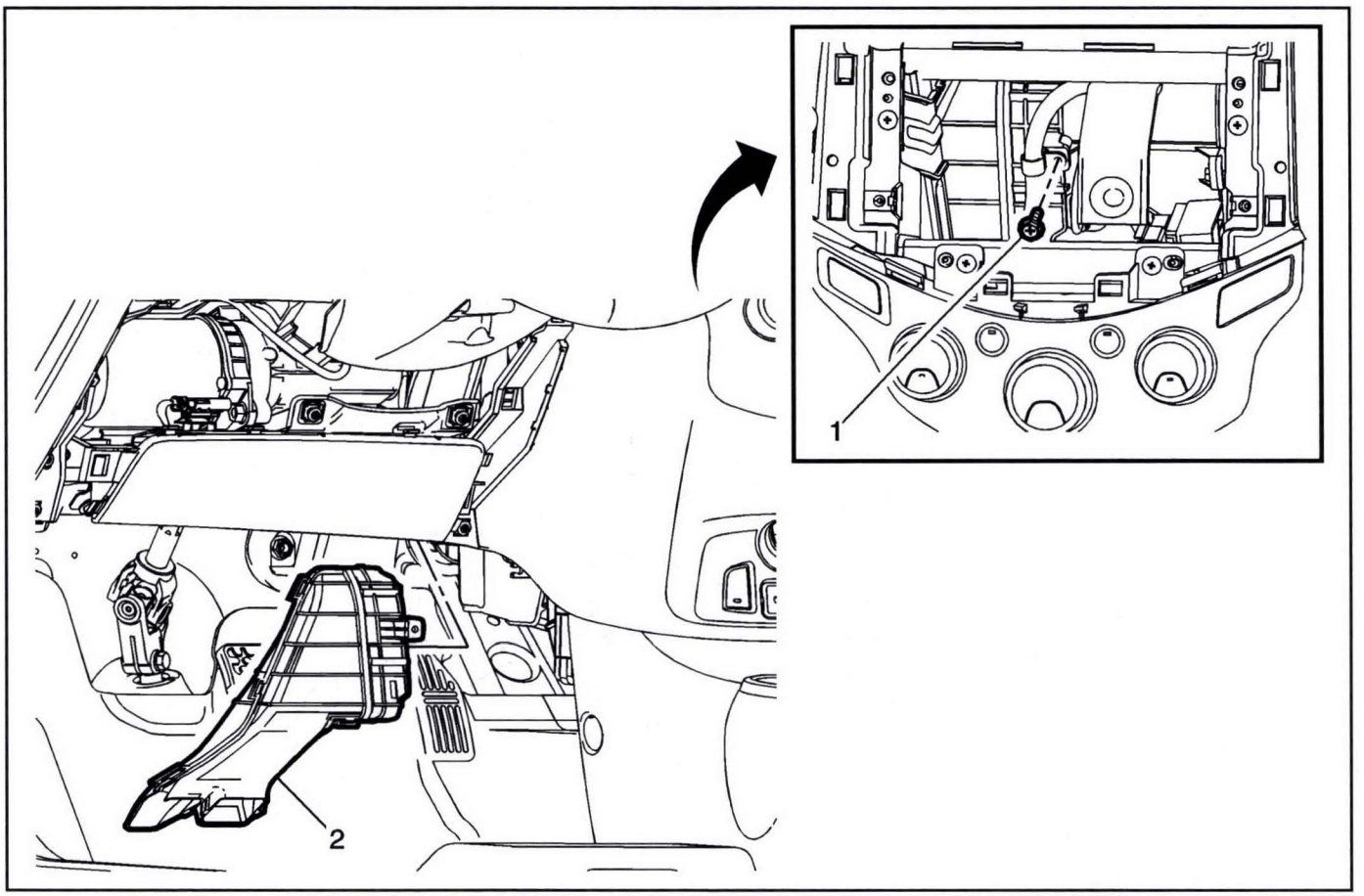

3137024

Floor Air Outlet Duct Replacement - Left Side

Callout	Component Name
Preliminary Procedure 1. Remove the driver side instrument panel knee bolster. Refer to *Instrument Panel Knee Bolster Replacement on page 2-22*. 2. Remove the radio assembly. Refer to *Radio Replacement on page 8-57*.	
1	Left Floor Air Outlet Duct Bolt **Caution:** Refer to *Fastener Caution on page 0-8*.
2	Floor Air Outlet Duct – Left Side **Procedure** Maneuver the left side floor air outlet duct out from behind the instrument panel assembly.

Floor Air Outlet Duct Replacement - Right Side

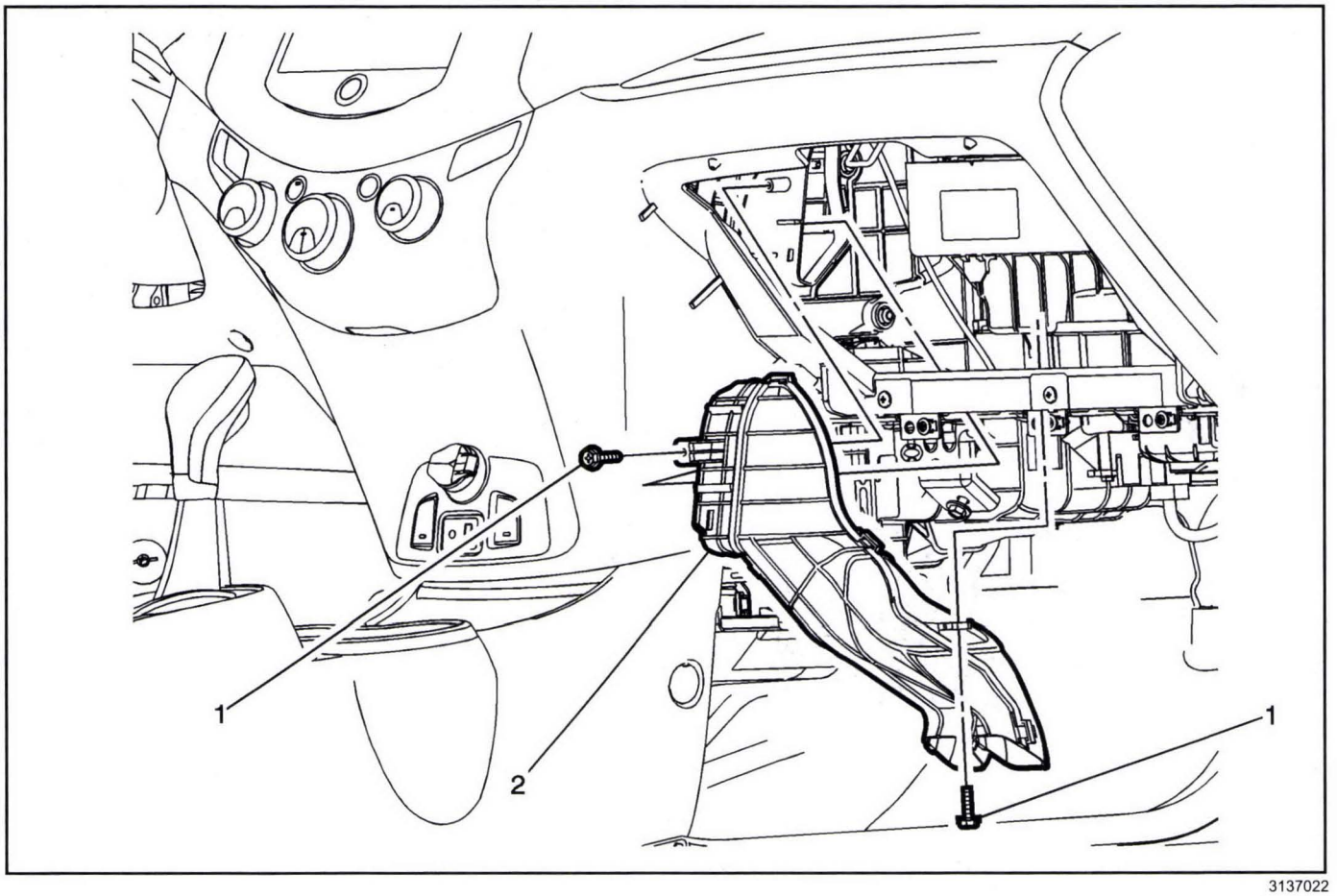

3137022

Floor Air Outlet Duct Replacement - Right Side

Callout	Component Name
Preliminary Procedures 1. Remove the instrument panel compartment. Refer to *Instrument Panel Compartment Replacement on page 2-29*. 2. Remove the passenger side inflatable restraint instrument panel lower air bag module, if equipped. Refer to *Instrument Panel Lower Airbag Replacement - Passenger Side on page 12-161*.	
1	Right Floor Air Outlet Duct Bolt (Qty: 2) **Caution:** Refer to *Fastener Caution on page 0-8*.
2	Floor Air Outlet Duct – Right Side

Heater Core Replacement

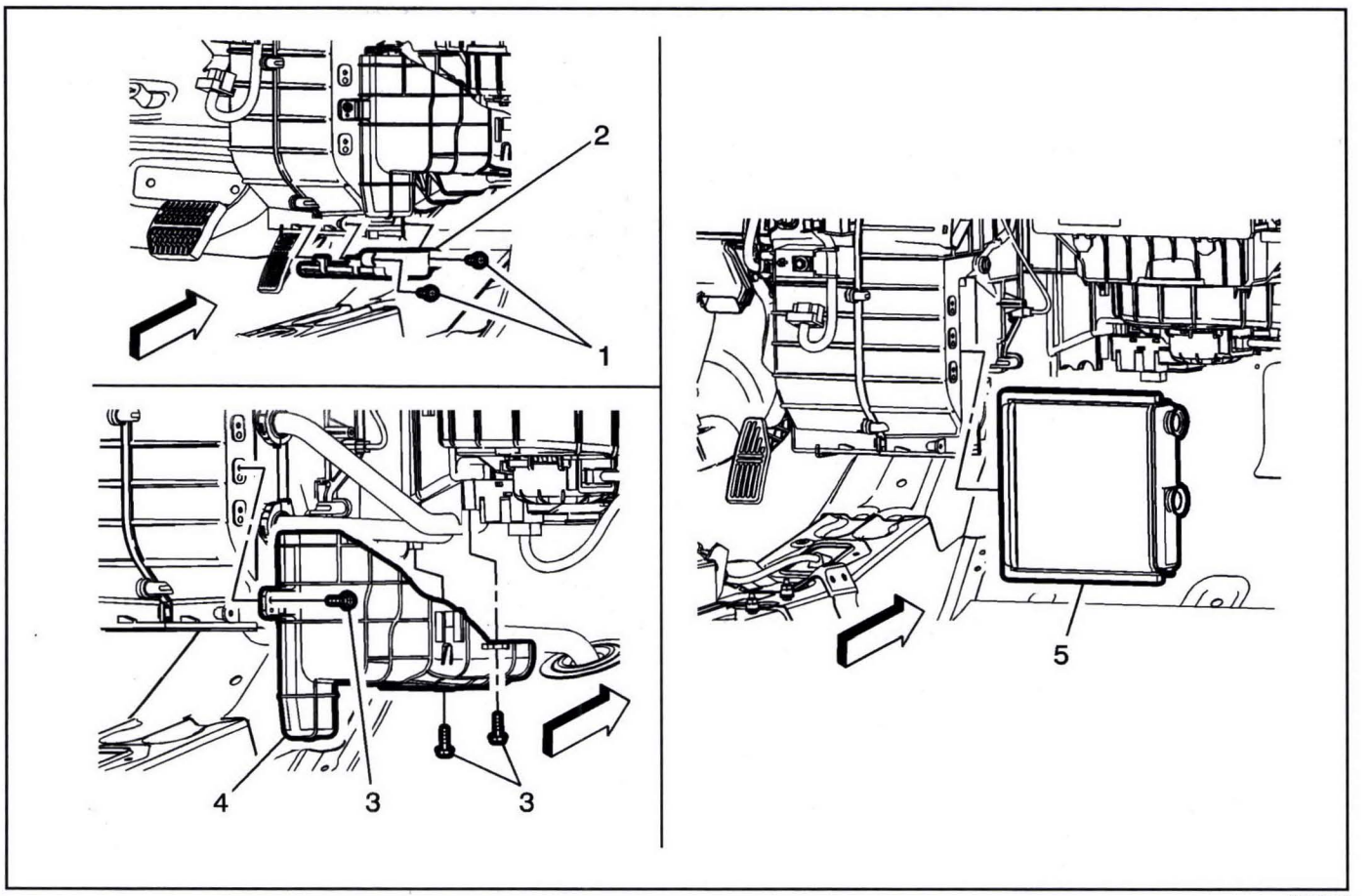

3216649

Heater Core Replacement

Callout	Component Name
Preliminary Procedures 1. Drain the heater coolant heater system. Refer to *Heater Coolant Heater Draining and Filling on page 10-21*. 2. Remove the instrument panel tie bar assembly. Refer to *Instrument Panel Tie Bar Replacement on page 2-40*. 3. Remove the right front floor air outlet duct. Refer to *Floor Air Outlet Duct Replacement - Right Side on page 10-72*.	
1	Heater Core Cover Bolt (Qty: 2) **Caution:** Refer to *Fastener Caution on page 0-8*.
2	Heater Core Cover
3	Heater Core Pipe Side Cover Bolt (Qty: 3)
4	Heater Core Pipe Side Cover
5	Heater Core Assembly **Procedures** 1. Remove the heater core inlet and outlet pipes from the heater core assembly. Refer to *Heater Inlet And Outlet Pipe Replacement on page 10-53*. 2. Position the heater core inlet and outlet pipes out of the way. 3. Maneuver the heater core out of the distributor case.

Heater Coolant Heater Replacement

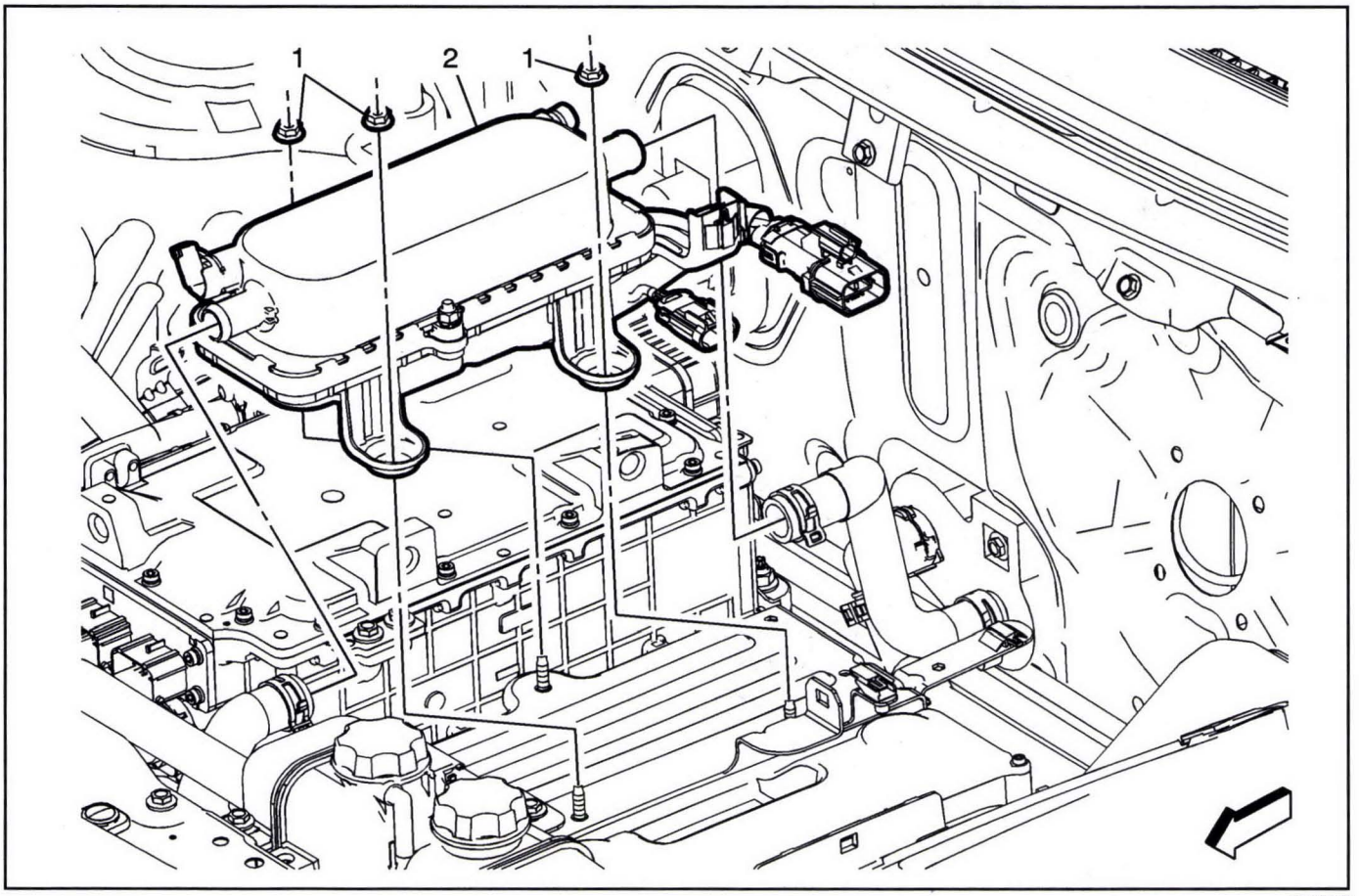

3239857

Heater Coolant Heater Replacement

Callout	Component Name
Danger: Before conducting any repair to this high voltage cooling system, it is necessary to determine/verify whether no high-voltage system faults exist. If high-voltage faults exist, follow published DTC diagnostics/repair procedures prior to performing any cooling system repairs. Failure to correct High Voltage Faults before working on the high voltage cooling system could result in personal injury or death.	
Preliminary Procedure 1. Turn vehicle power OFF and remove all keyless entry transmitters from the vehicle and secure in a place outside the vehicle. 2. Remove the electrical connectors from the high voltage battery disconnect control module. Refer to *High Voltage Battery Disconnect Control Module Module Replacement (with quick charge) on page 9-175* or *High Voltage Battery Disconnect Control Module Module Replacement (without quick charge) on page 9-179*. 3. Drain the cabin heater coolant heater system. Refer to *Heater Coolant Heater Draining and Filling on page 10-21*. 4. Remove the auxiliary heater inlet hose from the heater coolant heater. Refer to *Auxiliary Heater Inlet Hose Replacement on page 10-51*. 5. Remove the auxiliary heater outlet hose from the heater coolant heater. Refer to *Auxiliary Heater Outlet Hose Replacement on page 10-52*. 6. Disconnect the electrical connectors from the heater coolant heater. 7. Disconnect the electrical connector from the engine coolant temperature sensor - heater coolant heater.	
1	Heater Coolant Heater Nut (Qty: 3) **Caution:** Refer to *Fastener Caution on page 0-8*. **Tighten** 9 N•m (80 lb in)

Heater Coolant Heater Replacement (cont'd)

Callout	Component Name
2	Heater Coolant Heater **Procedure** 1. After installation, fill the radiator surge tank heater reservoir to the fill level. Refer to *Heater Coolant Heater Draining and Filling on page 10-21*. 2. Inspect cooling system for leaks.

Heater Coolant Heater Bracket Replacement

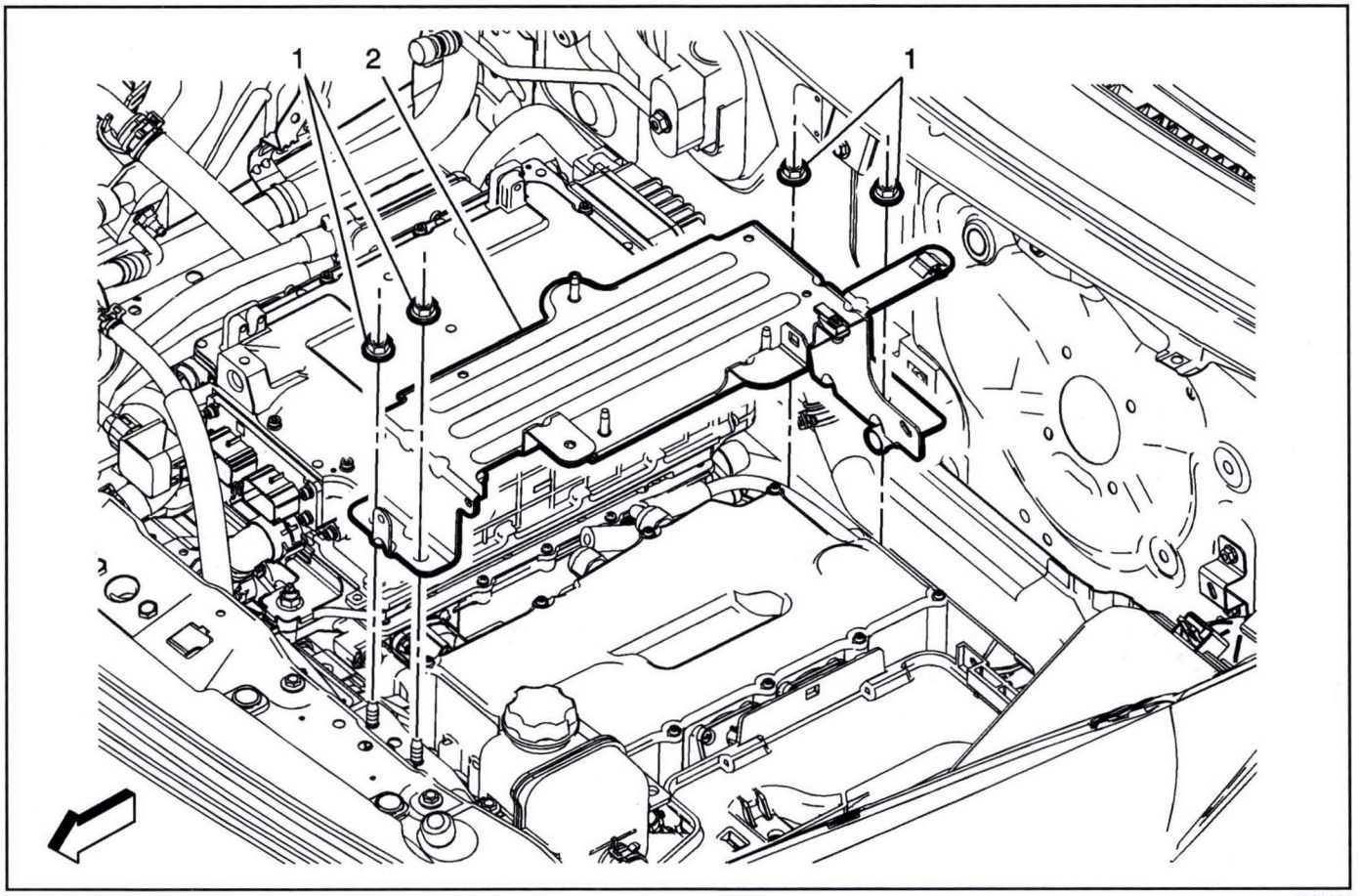

3239860

Heater Coolant Heater Bracket Replacement

Callout	Component Name
	Danger: Before conducting any repair to this high voltage cooling system, it is necessary to determine/verify whether no high-voltage system faults exist. If high-voltage faults exist, follow published DTC diagnostics/repair procedures prior to performing any cooling system repairs. Failure to correct High Voltage Faults before working on the high voltage cooling system could result in personal injury or death.
	Preliminary Procedure 1. Turn vehicle power OFF and remove all keyless entry transmitters from the vehicle and secure in a place outside the vehicle. 2. Remove the heater coolant heater. Refer to *Front Compartment Air Deflector Replacement on page 3-125*. 3. Remove the engine control module bracket. Refer to *Engine Control Module Bracket Replacement on page 9-172*. 4. Remove the battery positive cable retaining clip from the heater coolant heater bracket. 5. Disconnect the engine wiring harness and remove the retaining clip from the heater coolant heater bracket. 6. Remove the drive motor battery coolant inlet hose retaining clip from the heater coolant heater bracket.

Heater Coolant Heater Bracket Replacement (cont'd)

Callout	Component Name
1	Heater Coolant Heater Bracket Nut (Qty: 4) **Caution:** Refer to *Fastener Caution on page 0-8*. **Tighten** 9 N•m (80 lb in)
2	Heater Coolant Heater Bracket

Engine Coolant Temperature Sensor Replacement - Heater Coolant Heater

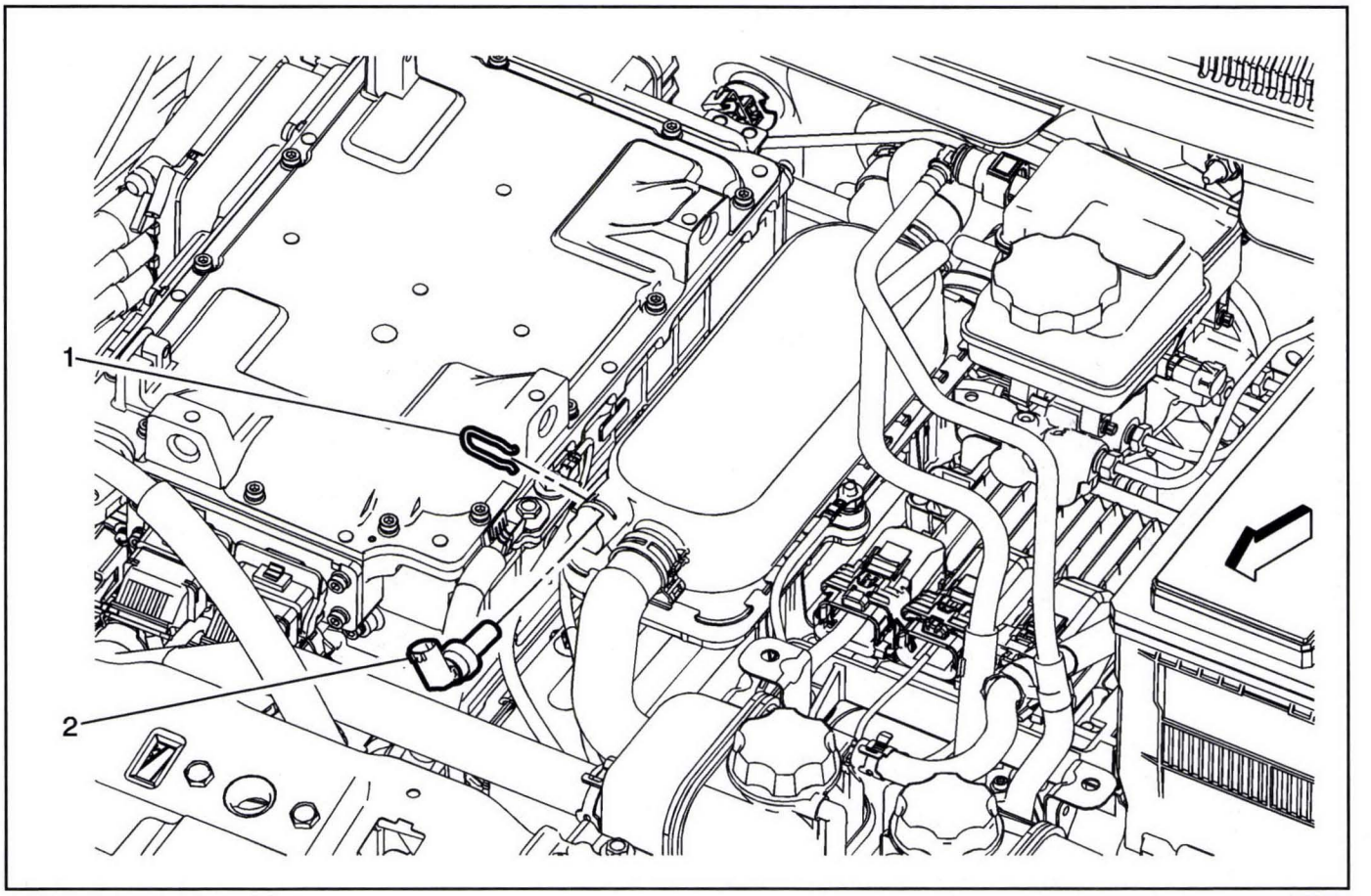

3239852

Engine Coolant Temperature Sensor Replacement - Heater Coolant Heater

Callout	Component Name
	Danger: Before conducting any repair to this high voltage cooling system, it is necessary to determine/verify whether no high-voltage system faults exist. If high-voltage faults exist, follow published DTC diagnostics/repair procedures prior to performing any cooling system repairs. Failure to correct High Voltage Faults before working on the high voltage cooling system could result in personal injury or death. **Preliminary Procedure** 1. Turn vehicle power OFF and remove all keyless entry transmitters from the vehicle and secure in a place outside the vehicle. 2. Remove the high voltage disconnect circuit connector cover. Refer to *High Voltage Disconnect Circuit Connector Cover Replacement on page 9-174*. 3. Drain the cabin heater cooling system. Refer to *Heater Coolant Heater Draining and Filling on page 10-21*.
1	Engine Coolant Temperature Sensor Retainer

Engine Coolant Temperature Sensor Replacement - Heater Coolant Heater (cont'd)

Callout	Component Name
2	Engine Coolant Temperature Sensor **Procedure** 1. Disconnect the electrical connector from the engine coolant temperature sensor. 2. After installation, fill the radiator surge tank to the fill level. Refer to *Heater Coolant Heater Draining and Filling on page 10-21*. 3. Inspect cooling system for leaks.

Description and Operation

Heating and Air Conditioning System Description and Operation

Heating

The heating system uses the engine and a high voltage heater to provide heat to the passenger compartment. The high voltage heater is used when the engine is not running and passenger compartment heat is requested. The high voltage heater provides different levels of heat depending on the amount of heat needed and outside temperature.

The HVAC Control Module turns on the coolant pump and monitors the temperature sensors in the passenger compartment, outside air, engine radiator, high voltage heater and the engine to determine the position of the coolant flow control valve and if the high voltage heater is needed. Passenger compartment heat is provided by air flowing through the heater core. The heater core is heated by coolant from either the engine or the high voltage heater.

The engine cooling system circulates a 50/50 mixture of Dex-cool and deionized water.

Air Conditioning

The A/C system uses the refrigerant R-1234yf which is a gas at very low temperatures and can transfer heat from the passenger compartment and high voltage battery to the outside air. The A/C system is mechanically protected with the use of a high pressure relief valve on the A/C compressor. If the refrigerant pressure sensor were to fail or if the A/C system becomes restricted and the refrigerant pressure continued to rise, the high pressure relief will open and release refrigerant from the system.

The high voltage electric A/C compressor is a self contained high voltage inverter, electric motor, and direct coupled compressor. The electric A/C compressor has the ability to run and provide cooling performance while the vehicle engine is not running. This feature enables the electric A/C compressor to run at a speed independent of the engine. The electronic climate control module and the Vehicle Integration Control Module (VICM) will command the electric A/C compressor to a speed necessary to maintain a desired cooling level rather than cycle the electric A/C compressor on and off.

The electric A/C compressor builds pressure and adds heat to the refrigerant gas. The refrigerant gas flows from the electric A/C compressor to the condenser where heat is transferred to the outside air when the refrigerant condenses from a gas to a liquid. The liquid refrigerant then flows to a thermal expansion valve (TXV) on the battery chiller. The TXV lowers the pressure of the liquid refrigerant which makes the refrigerant expand from a liquid to a vapor. The low pressure refrigerant vapor flows into the battery chiller and begins to boil and change into a gas as the refrigerant absorbs heat from the battery coolant also flowing inside the battery chiller. The battery coolant and refrigerant are separated by several plates inside the battery chiller. The liquid refrigerant also flows to a second TXV on the evaporator. The low pressure refrigerant vapor flows from the TXV into the evaporator and begins to boil and change into a gas as the refrigerant absorbs heat from the passenger compartment air that is flowing through the outside of the evaporator. The moister in the passenger compartment air condenses on the outside of the evaporator and flows down to the bottom of the HVAC module where it drains outside the passenger compartment through a drain hose. The low pressure refrigerant gas then flows from the battery chiller and the evaporator back to the electric A/C compressor where the cycle is repeated.

Special Tools and Equipment

Illustration	Tool Number/ Description
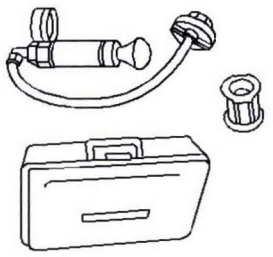 1405	EN 24460-A J 24460-A Cooling System Pressure Tester
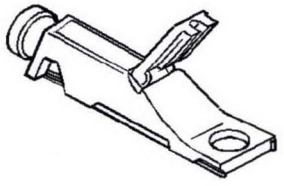 12869	GE 26568 J 26568 Coolant and Battery Tester

Illustration	Tool Number/ Description
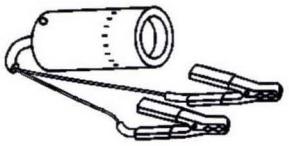 677808	GE 42220 J 42220 Universal 12V Leak Detection Lamp
748416	GE 43872 J 43872 Fluorescent Dye Cleaner
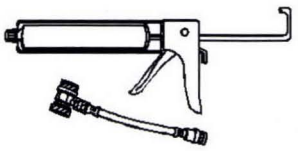 817931	GE 45037-A J 45037-A A/C PAG/POE Oil Injector
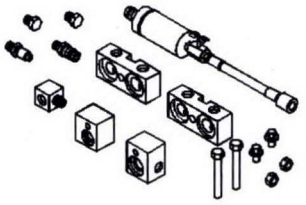 767049	GE 45268 J 45268 Flush Adapter Kit
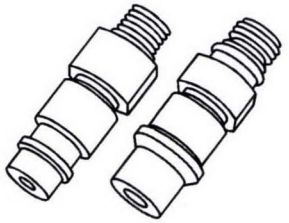 3581409	GE-45268-130 (Includes GE-45268-128 and GE-45268-129) R1234yf Flush Adapters

Illustration	Tool Number/ Description
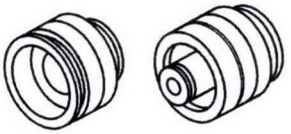 1385126	GE 46143-2 J 46143-2 Cooling System Adapter
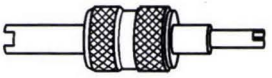 900408	GE 46246 J 46246 Valve Core Removal Tool
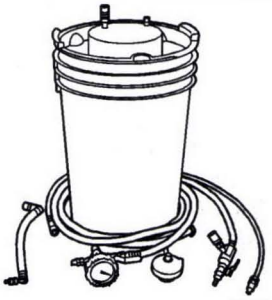 1617830	GE 47716 Vac-N-Fill Coolant Refill Tool
2772114	GE 50078 Electronic Leak Detector
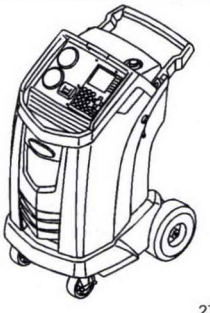 2772007	GE 50300 R-1234yf A/C Refrigerant Recovery/Recharge Cart

Illustration	Tool Number/ Description
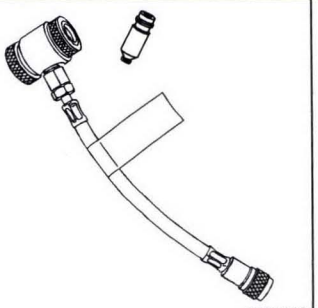 3581413	GE-50745 R-1234yf A/C POE Oil Injection Hose

Illustration	Tool Number/ Description
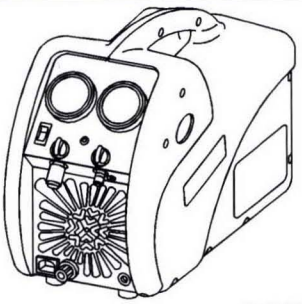 2772019	GE 50957 Machine R-1234yf Contaminated Refrigerant

HVAC - Automatic

Schematic and Routing Diagrams

HVAC Schematics (Power, Ground, Data Communication and Blower Controls)

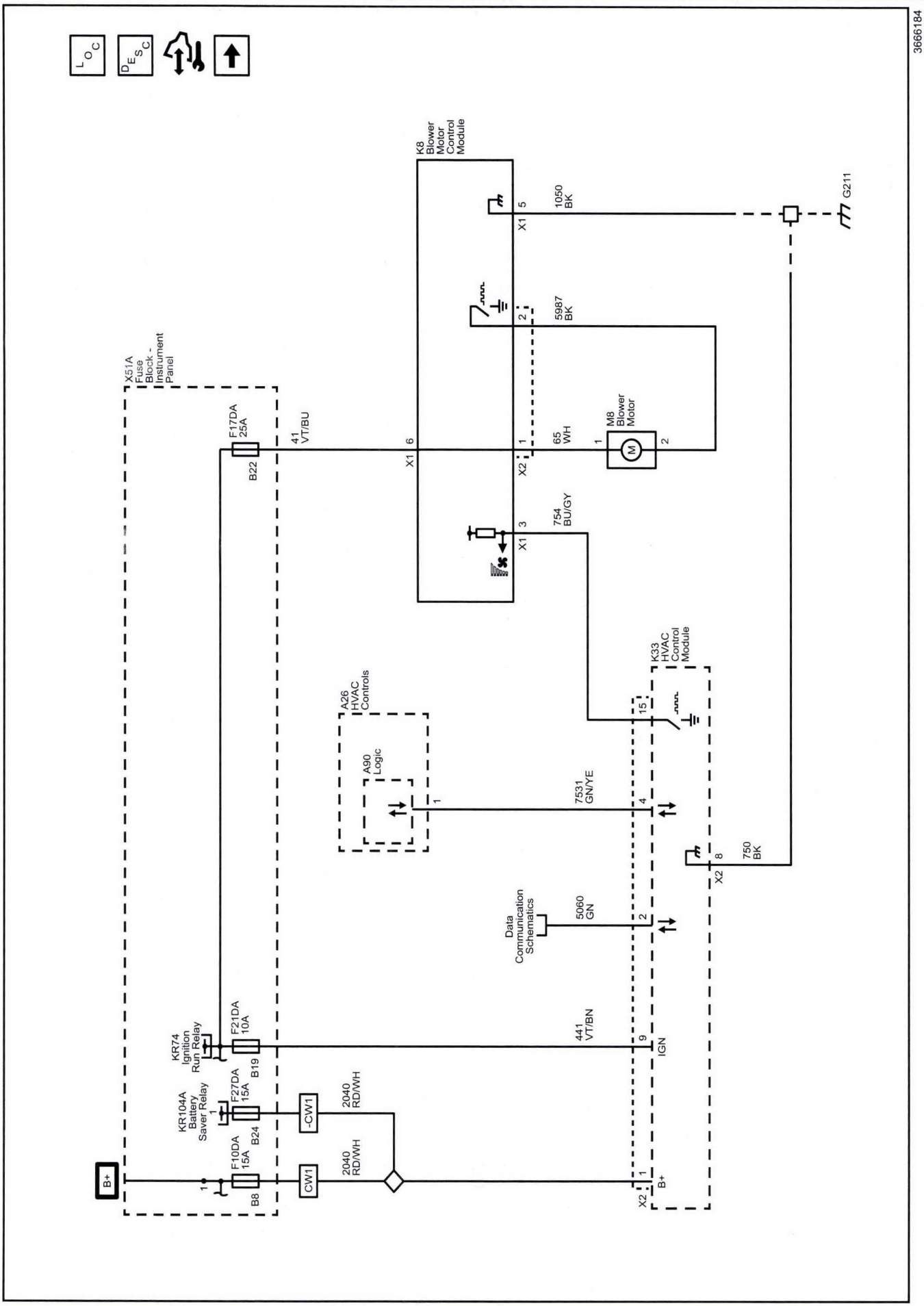

HVAC Schematics (Actuators)

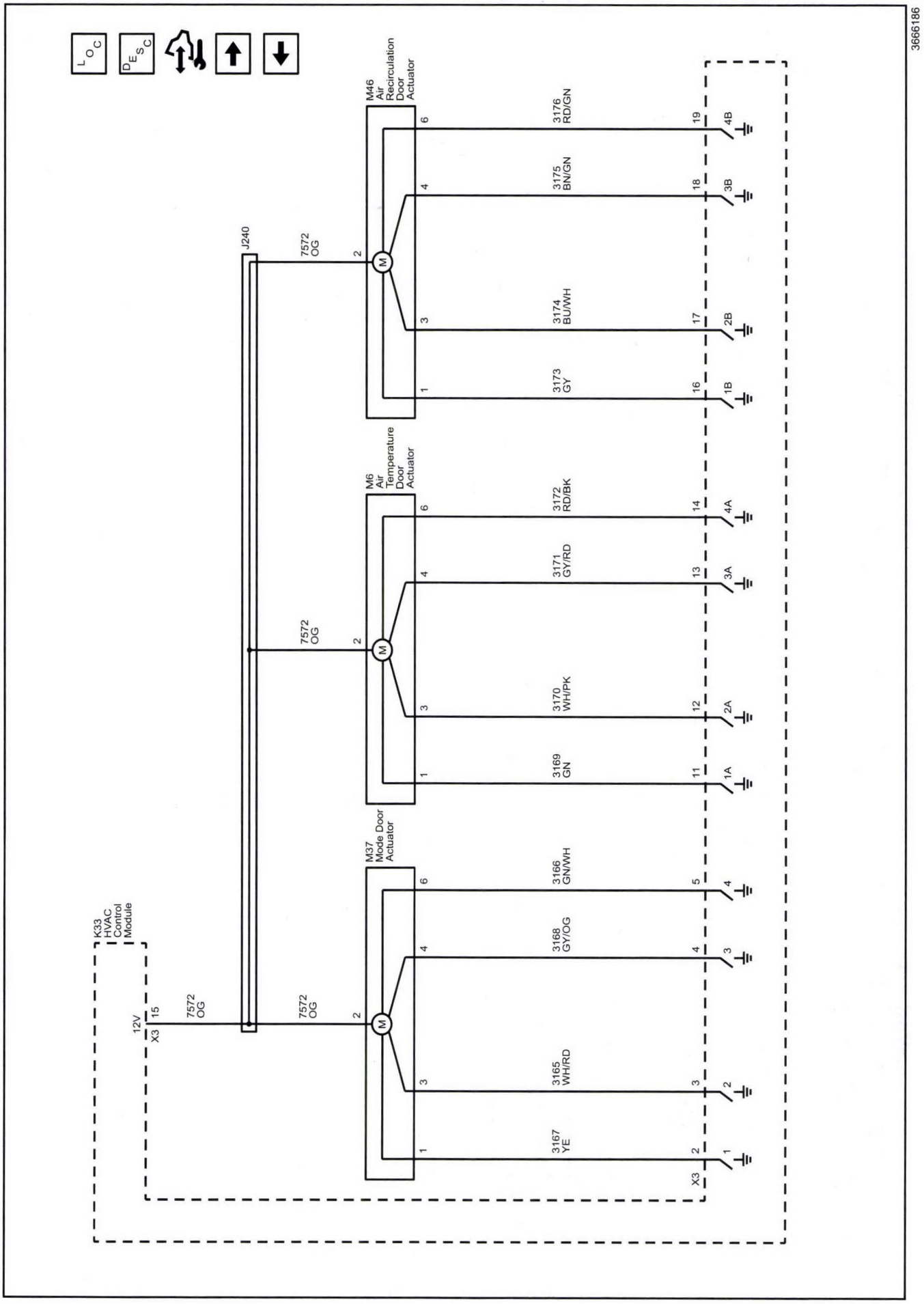

HVAC Schematics (Sensors)

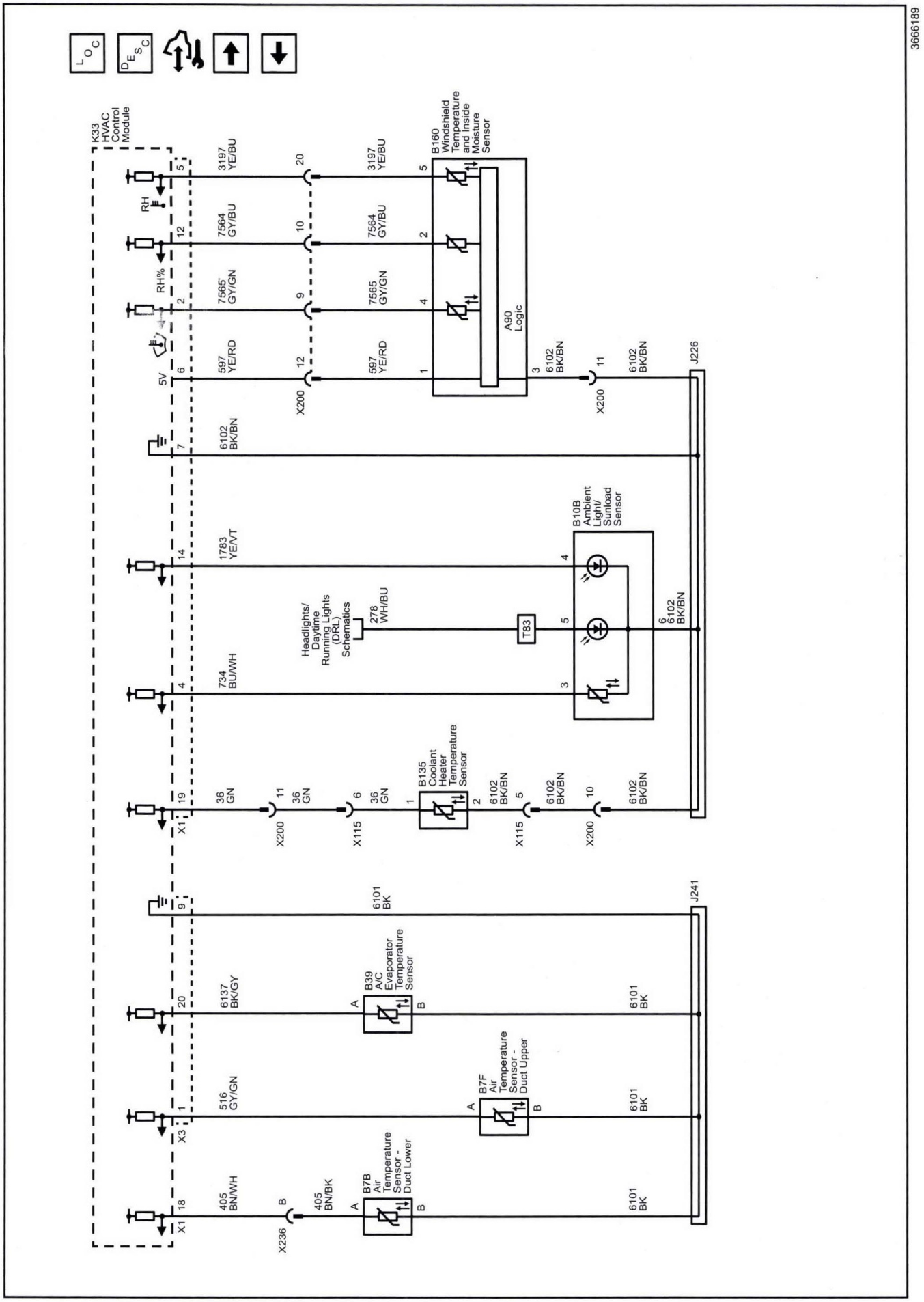

HVAC Schematics (Cabin Heater)

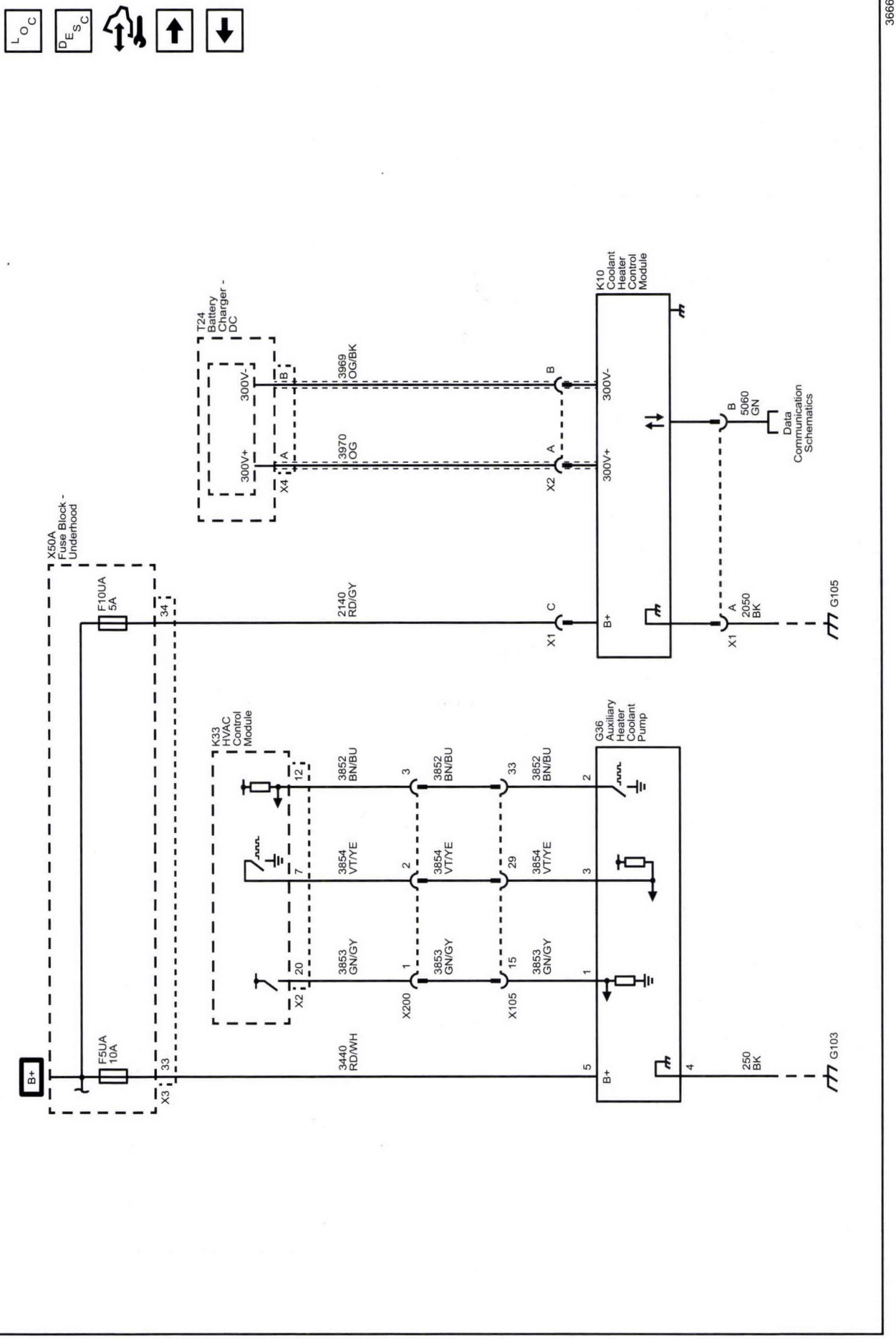

HVAC Schematics (Compressor Controls (Except CBT))

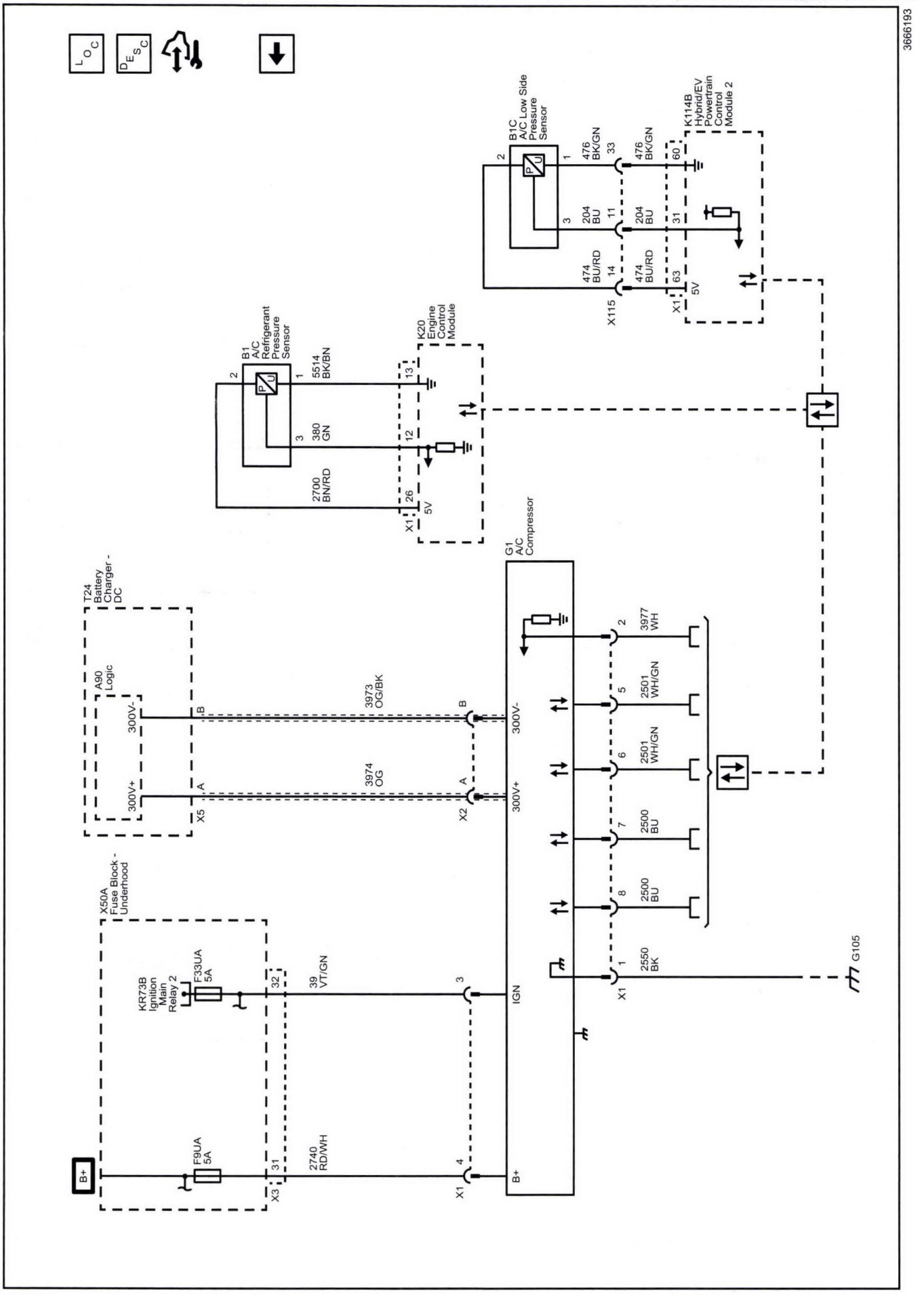

HVAC Schematics (Compressor Controls (CBT))

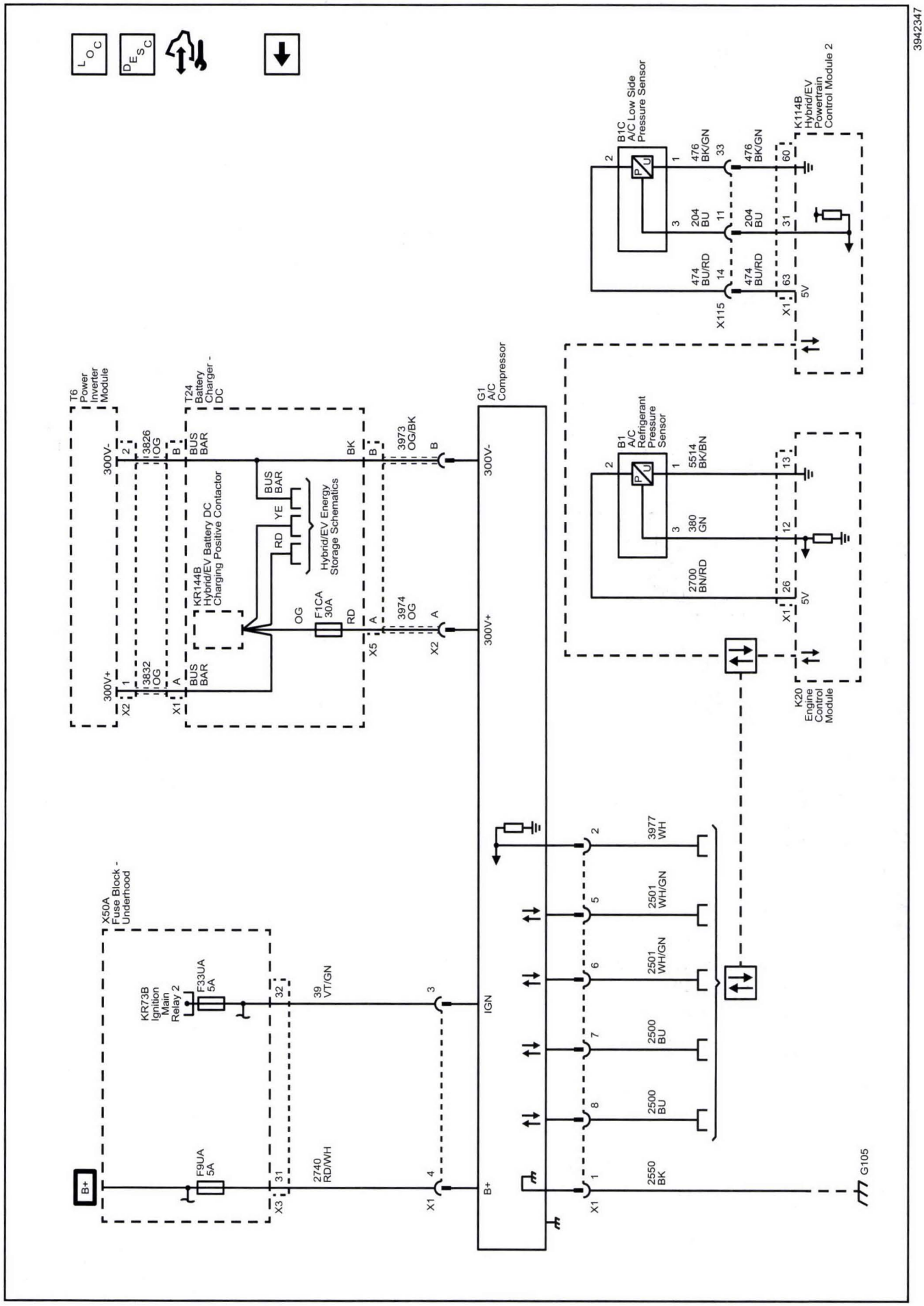

Diagnostic Information and Procedures

HVAC Component Replacement Reference

Component	Repair Instruction
A26 HVAC Controls	*Auxiliary Heater and Air Conditioning Control Replacement on page 10-135*
B1 A/C Refrigerant Pressure Sensor	*Air Conditioning Refrigerant Pressure Sensor Replacement - High Pressure on page 10-42*
B10B Ambient Light/Sunload Sensor	*Sun Load Temperature Sensor Replacement on page 10-144*
B135 Coolant Heater Temperature Sensor	*Engine Coolant Temperature Sensor Replacement - Heater Coolant Heater on page 10-76*
B160 Windshield Temperature and Inside Moisture Sensor	*Inside Air Moisture and Windshield Temperature Sensor Replacement on page 10-143*
B1C A/C Low Side Pressure Sensor	*Air Conditioning Refrigerant Pressure Sensor Replacement - Low Pressure on page 10-41*
B39 A/C Evaporator Temperature Sensor	*Evaporator Air Temperature Sensor Replacement on page 10-140*
B7B Air Temperature Sensor — Duct Lower	*Inside Air Temperature Sensor Replacement - Left Side Lower on page 10-141*
B7F Air Temperature Sensor-Duct Upper	*Inside Air Temperature Sensor Replacement - Right Side Upper on page 10-142*
G1 A/C Compressor	*Air Conditioning Compressor Replacement on page 10-26*
G36 Auxiliary Heater Coolant Pump	*Heater Coolant Pump Replacement on page 10-56*
K10 Coolant Heater Control Module	*Heater Coolant Heater Replacement on page 10-74*
K33 HVAC Control Module	*Heater and Air Conditioning Remote Control Replacement on page 10-134*
K8 Blower Motor Control Module	*Blower Motor Control Replacement on page 10-60*
M37 Mode Door Actuator	*Mode Control Cam Actuator Replacement on page 10-138*
M46 Air Recirculation Door Actuator	*Air Inlet Valve Actuator Replacement on page 10-136*
M6 Air Temperature Door Actuator	*Temperature Valve Actuator Replacement on page 10-139*
M8 Blower Motor	*Blower Motor Replacement on page 10-61*

DTC B0163

Diagnostic Instructions

- Perform the *Diagnostic System Check - Vehicle on page 6-91* prior to using this diagnostic procedure.
- Review *Strategy Based Diagnosis on page 6-83* for an overview of the diagnostic approach.
- *Diagnostic Procedure Instructions on page 6-84* provides an overview of each diagnostic category.

DTC Descriptors

DTC B0163: Passenger Compartment Temperature Sensor Circuit

For symptom byte information, refer to *Symptom Byte List on page 6-117*.

Diagnostic Fault Information

Circuit	Short to Ground	Open/High Resistance	Short to Voltage	Signal Performance
Signal	B0163 02	B0163 05	B0163 05	1
Low Reference	—	B0163 05, B0183 05	—	—
1. HVAC Malfunction				

Circuit/System Description

The ambient light/sunload sensor integrates the sunload sensor and passenger compartment temperature sensor.

The solar sensor is connected to ground and to a 5 V voltage supply from the HVAC control module. As the sunload increases, the sensor signal voltage also increases. The signal varies between 1.4–4.5 V and is provided to the HVAC control module.

The passenger compartment temperature sensor is a negative temperature coefficient thermistor. A signal and low reference circuit enables the sensor to operate. As the air temperature increases, the sensor resistance decreases. The sensor signal varies between 0–5 V.

Bright or high intensity light causes the vehicles interior temperature to increase. The HVAC system compensates for the increased temperature by diverting additional cool air into the vehicle.

Conditions for Running the DTC

- Vehicle in Service Mode.
- The HVAC control module is ON.

Conditions for Setting the DTC

B0163 02

The HVAC control module detects the sensor signal out of range. The signal voltage is less than 0.1 V for more than 50 ms.

B0163 05

The HVAC control module detects the sensor signal out of range. The signal voltage is greater than 4.9 V for more than 50 ms.

Action Taken When the DTC Sets

The system operates using a default value.

Conditions for Clearing the DTC

The condition for setting the DTC is no longer present.

Reference Information

Schematic Reference

HVAC Schematics on page 10-81

Connector End View Reference

Component Connector End Views on page 11-455

Description and Operation

Automatic HVAC Description and Operation on page 10-144

Electrical Information Reference

- *Circuit Testing on page 11-871*
- *Connector Repairs on page 11-895*
- *Testing for Intermittent Conditions and Poor Connections on page 11-877*
- *Wiring Repairs on page 11-883*

Scan Tool Reference

Control Module References on page 6-3 for scan tool information

Circuit/System Testing

1. Vehicle OFF and all vehicle systems OFF, disconnect the harness connector at the B10B Ambient Light/Sunload Sensor. It may take up to 10 min for all vehicle systems to power down.

   Note: The scan tool must be disconnected from the vehicle before performing the next test.

2. Test for less than 10 Ω between the low reference circuit terminal 6 and ground.

⇒ **If 10 Ω or greater**

2.1. Vehicle OFF, disconnect the harness connector at the K33 HVAC Control Module.

2.2. Test for less than 2 Ω in the low reference circuit end to end.

⇒ If 2 Ω or greater, repair the open/high resistance in the circuit.

⇒ If less than 2 Ω, replace the K33 HVAC Control Module.

⇓ **If less than 10 Ω**

3. Vehicle in Service Mode.
4. Verify the scan tool Passenger Compartment Air Temperature (Unfiltered) parameter is less than −37°C (−35°F).

⇒ **If −37°C (−35°F) or greater**

4.1. Vehicle OFF, disconnect the harness connector at the K33 HVAC Control Module.

4.2. Test for infinite resistance between the signal circuit terminal 3 and ground.

⇒ If less than infinite resistance, repair the short to ground on the circuit.

⇒ If infinite resistance, replace the K33 HVAC Control Module.

⇓ **If less than −37°C (−35°F)**

5. Install a 3 A fused jumper wire between the signal circuit terminal 3 and the low reference circuit terminal 6.
6. Verify the scan tool parameter Passenger Compartment Air Temperature (Unfiltered) parameter is greater than 113°C (235°F).

⇒ **If 113°C (235°F) or less**

6.1. Vehicle OFF, remove the jumper wire and disconnect the harness connector at the K33 HVAC Control Module, vehicle in Service Mode.

6.2. Test for less than 1 V between the signal circuit and ground.

⇒ If 1 V or greater, repair the short to voltage on the circuit.

⇓ If less than 1 V

6.3. Vehicle OFF.

6.4. Test for less than 2 Ω in the signal circuit end to end.

⇒ If 2 Ω or greater, repair the open/high resistance in the circuit.

⇒ If less than 2 Ω, replace the K33 HVAC Control Module.

⇓ **If greater than 113°C (235°F)**

7. Test or replace the B10B Ambient Light/Sunload Sensor.

Repair Instructions

Perform the *Diagnostic Repair Verification on page 6-123* after completing the repair.

- *HVAC Component Replacement Reference on page 10-87*
- *Control Module References on page 6-3* for HVAC control module replacement, programming and setup

DTC B0173, B0178, or B3933

Diagnostic Instructions

- Perform the *Diagnostic System Check - Vehicle on page 6-91* prior to using this diagnostic procedure.
- Review *Strategy Based Diagnosis on page 6-83* for an overview of the diagnostic approach.
- *Diagnostic Procedure Instructions on page 6-84* provides an overview of each diagnostic category.

DTC Descriptors

DTC B0173 02: Upper Left Duct Air Temperature Sensor Circuit Short to Ground
DTC B0173 05: Upper Left Duct Air Temperature Sensor Circuit High Voltage/Open
DTC B0178 02: Lower Left Duct Air Temperature Sensor Circuit Short to Ground
DTC B0178 05: Lower Left Duct Air Temperature Sensor Circuit High Voltage/Open
DTC B3933 02: Air Conditioning Evaporator Temperature Sensor Circuit Short to Ground
DTC B3933 05: Air Conditioning Evaporator Temperature Sensor Circuit High Voltage/Open

Diagnostic Fault Information

Circuit	Short to Ground	Open/High Resistance	Short to Voltage	Signal Performance
Upper Left Duct Air Temperature Sensor Signal	B0173 02	B0173 05	B0173 05	—
Lower Left Duct Air Temperature Sensor Signal	B0178 02	B0178 05	B0178 05	—
Air Conditioning Evaporator Temperature Sensor Signal	B3933 02	B3933 05	B3933 05	—
Low Reference	—	B0173 05, B0178 05, B3933 05	—	—

Circuit/System Description

The air temperature sensors are a 2-wire negative temperature coefficient thermistor. The vehicle uses the following air temperature sensors:

- Air temperature sensor - left upper
- Air temperature sensor - left lower
- A/C evaporator temperature sensor

This sensor operates using signal and low reference circuits. As the air temperature surrounding the sensor increases, the sensor resistance decreases. The sensor is capable of reading temperatures ranging from −40 to +116°C (−40 to +240°F), with a signal voltage between 0–5 V. If the HVAC control module detects a malfunctioning sensor the software uses a default air temperature value. The default action ensures that the HVAC system can adjust the inside air temperature near the desired temperature until the condition is corrected.

Conditions for Running the DTC

- Vehicle in Service Mode.
- The HVAC control module is ON.

Conditions for Setting the DTC

The HVAC control module detects the sensor signal out of range. The signal voltage is less than 0.1 V or greater than 4.9 V for more than 50 ms.

Action Taken When the DTC Sets

The system operates using a default value.

Conditions for Clearing the DTC

The sensor signal is within specified range between 0.1–4.9 V.

Reference Information

Schematic Reference

HVAC Schematics on page 10-81

Connector End View Reference

Component Connector End Views on page 11-455

Description and Operation

Automatic HVAC Description and Operation on page 10-144

Electrical Information Reference

- *Circuit Testing on page 11-871*
- *Connector Repairs on page 11-895*
- *Testing for Intermittent Conditions and Poor Connections on page 11-877*
- *Wiring Repairs on page 11-883*

Scan Tool Reference

Control Module References on page 6-3 for scan tool information

Circuit/System Verification

1. Vehicle in Service Mode.
2. Verify DTC B3933 is not set.

⇒ **If DTC B3933 is set**

Refer to Circuit/System Testing — Without Scan Tool Support.

⇓ **If DTC B3933 is not set**

3. Verify the appropriate temperature sensor has a parameter displayed in HVAC scan tool information.

⇒ **If there is no scan tool parameter**

Refer to Circuit/System Testing — Without Scan Tool Support.

⇓ **If there is a scan tool parameter**

4. Refer to Circuit/System Testing — With Scan Tool Support.

Circuit/System Testing

With Scan Tool Support

1. Vehicle OFF and all vehicle systems OFF, disconnect the harness connector at the appropriate temperature sensor. It may take up to 10 min for all vehicle systems to power down.

   Note: The scan tool must be disconnected from the vehicle before performing the next test.

2. Test for less than 10 Ω between the low reference circuit terminal B and ground.

⇒ **If 10 Ω or greater**

2.1. Vehicle OFF, disconnect the harness connector at the K33 HVAC Control Module.

2.2. Test for less than 2 Ω in the low reference circuit end to end.

⇒ If 2 Ω or greater, repair the open/high resistance in the circuit.

⇒ If less than 2 Ω, replace the K33 HVAC Control Module.

⇓ **If less than 10 Ω**

3. Vehicle in Service Mode.
4. Verify the appropriate scan tool temperature sensor parameter is less than -37°C (-35°F)

⇒ **If greater than -37°C (-35°F)**

4.1. Vehicle OFF, disconnect the harness connector at the K33 HVAC Control Module.

4.2. Test for infinite resistance between the signal circuit terminal A and ground.

⇒ If less than infinite resistance, repair the short to ground on the circuit.

⇒ If infinite resistance, replace the K33 HVAC Control Module.

⇓ **If -37°C (-35°F) or less**

5. Install a 3 A fused jumper wire between the signal circuit terminal A and the low reference circuit terminal B.
6. Verify the scan tool temperature sensor parameter is greater than 113°C (235°F).

⇒ **If less than 113°C (235°F)**

6.1. Vehicle OFF, remove the jumper wire and disconnect the harness connector at the K33 HVAC Control Module, vehicle in Service Mode.

6.2. Test for less than 1 V between the signal circuit and ground.

⇒ If 1 V or greater, repair the short to voltage on the circuit.

⇓ If less than 1 V

6.3. Vehicle OFF.

6.4. Test for less than 2 Ω in the signal circuit end to end.

⇒ If 2 Ω or greater, repair the open/high resistance in the circuit.

⇒ If less than 2 Ω, replace the K33 HVAC Control Module.

⇓ **If 113°C (235°F) or greater**

7. Test or replace the temperature sensor.

Without Scan Tool Support

1. Vehicle OFF and all vehicle systems OFF, disconnect the harness connector at the appropriate temperature sensor. It may take up to 10 min for all vehicle systems to power down.

   Note: The scan tool must be disconnected from the vehicle before performing the next test.

2. Test for less than 10 Ω between the low reference circuit terminal B and ground.

⇒ **If 10 Ω or greater**

2.1. Vehicle OFF, disconnect the harness connector at the K33 HVAC Control Module.

2.2. Test for less than 2 Ω in the low reference circuit end to end.

⇒ If 2 Ω or greater, repair the open/high resistance in the circuit.

⇒ If less than 2 Ω, replace the K33 HVAC Control Module.

⇓ **If less than 10 Ω**

3. Test for 4.8–5.2 V between the signal circuit terminal A and ground.

⇒ **If less than 4.8 V**

3.1. Vehicle OFF, disconnect the harness connector at the K33 HVAC Control Module.

3.2. Test for infinite resistance between the signal circuit and ground.

⇒ If less than infinite resistance, repair the short to ground on the circuit.

⇓ If infinite resistance

3.3. Test for less than 2 Ω in the signal circuit end to end.

⇒ If 2 Ω or greater, repair the open/high resistance in the circuit.

⇒ If less than 2 Ω, replace the K33 HVAC Control Module.

⇒ **If greater than 5.2 V**

3.1. Vehicle OFF, disconnect the harness connector at the K33 HVAC Control Module, vehicle in Service Mode.

3.2. Test for less than 1 V between the signal circuit and ground.

⇒ If 1 V or greater, repair the short to voltage on the circuit.

⇒ If less than 1 V, replace the K33 HVAC Control Module.

⇓ **If between 4.8–5.2 V**

4. Test or replace the temperature sensor.
5. Operate the vehicle within the Conditions for Running the DTC. You may also operate the vehicle within the conditions that you observed from the Freeze Frame/Failure Records data.
6. Verify the DTC does not set.

⇒ **If the DTC sets**

Replace the K33 HVAC Control Module.

⇓ **If the DTC does not set**

7. All OK.

Repair Instructions

Perform the *Diagnostic Repair Verification on page 6-123* after completing the repair.

- *HVAC Component Replacement Reference on page 10-87*
- *Control Module References on page 6-3* for HVAC control module replacement, programming and setup

DTC B018A, B048C, B048F, or B1395

Diagnostic Instructions

- Perform the *Diagnostic System Check - Vehicle on page 6-91* prior to using this diagnostic procedure.
- Review *Strategy Based Diagnosis on page 6-83* for an overview of the diagnostic approach.
- *Diagnostic Procedure Instructions on page 6-84* provides an overview of each diagnostic category.

DTC Descriptors

DTC B018A 02: Windshield Temperature Sensor Circuit Short to Ground
DTC B018A 05: Windshield Temperature Sensor Circuit High Voltage/Open
DTC B048C 02: Humidity Sensor Humidity Circuit Short to Ground
DTC B048C 05: Humidity Sensor Humidity Circuit High Voltage/Open
DTC B048F 02: Humidity Sensor Temperature Circuit Short to Ground
DTC B048F 05: Humidity Sensor Temperature Circuit High Voltage/Open
DTC B1395 03: Control Module Voltage Reference Output Circuit Low Voltage
DTC B1395 07: Control Module Voltage Reference Output Circuit High Voltage

Diagnostic Fault Information

Circuit	Short to Ground	Open/High Resistance	Short to Voltage	Signal Performance
5 V Reference	B1395 03	B1395 03	B1395 07	—
Signal Terminal 2	B048C 02	B048C 05	B048C 05	—
Signal Terminal 4	B018A 02	B018A 05	B018A 05	—
Signal Terminal 5	B048F 02	B048F 05	B048F 05	—
Low Reference	—	B018A 05, B048C 05, B048F 05, B1395 03	—	—

Circuit/System Description

The windshield temperature and inside moisture sensor includes the relative humidity sensor, windshield temperature sensor and humidity sensing element temperature sensor.

This sensor assembly provides information about:

- Relative humidity level at windshield inside
- Temperature of the windshield inside
- Temperature of the humidity sensor element

The relative humidity sensor measures the relative humidity of the compartment side of the windshield. It also detects the temperature of the windshield surface on the compartment side. Both values are used as control inputs for the HVAC control module application to calculate the fog risk on windshield compartment side and ability to reduce fuel consumption by decreasing A/C compressor power to a minimum without causing any fog. The sensor will also enable partial recirculation mode in order to improve heat-up performance of the passenger compartment under cold ambient temperature conditions without the risk of mist build-up on the windshield. The humidity sensor element temperature sensor supplies the temperature of the humidity sensor element. It is only needed if the thermal contact between the humidity sensing element and the inside windshield surface is not sufficient.

Conditions for Running the DTC

- Vehicle Service Mode.
- The HVAC control module is ON.

Conditions for Setting the DTC

B018A 02, B048C 02, B048F 02 or B1395 03

The HVAC control module detects the sensor signal out of range. The signal voltage is less than 0.1 V for more than 50 ms.

B018A 05, B048C 05, B048F 05 or B1395 07

The HVAC control module detects the sensor signal out of range. The signal voltage is greater than 4.9 V for more than 50 ms.

Action Taken When the DTC Sets

- The system will use the last valid values as default.
- If no value is read at the time of fault, the HVAC control module uses 60% for humidity.

Conditions for Clearing the DTC

The condition for setting the DTC is no longer present.

Reference Information

Schematic Reference

HVAC Schematics on page 10-81

Connector End View Reference

Component Connector End Views on page 11-455

Description and Operation

Automatic HVAC Description and Operation on page 10-144

Electrical Information Reference

- *Circuit Testing on page 11-871*
- *Connector Repairs on page 11-895*
- *Testing for Intermittent Conditions and Poor Connections on page 11-877*
- *Wiring Repairs on page 11-883*

Scan Tool Reference

Control Module References on page 6-3 for scan tool information

Circuit/System Testing

1. Vehicle OFF and all vehicle systems OFF, disconnect the harness connector at the B160 Windshield Temperature and Inside Moisture Sensor. It may take up to 10 min for all vehicle systems to power down.

   Note: The scan tool must be disconnected from the vehicle before performing the next test.

2. Test for less than 10 Ω between the low reference circuit terminal 3 and ground.

⇒ **If 10 Ω or greater**

2.1. Vehicle OFF, disconnect the harness connector at the K33 HVAC Control Module.

2.2. Test for less than 2 Ω in the low reference circuit end to end.

⇒ If 2 Ω or greater, repair the open/high resistance in the circuit.

⇒ If less than 2 Ω, replace the K33 HVAC Control Module.

⇓ **If less than 10 Ω**

3. Vehicle in Service Mode.
4. Test for 4.8–5.2 V between the 5 V reference circuit terminal 1 and ground.

⇒ **If less than 4.8 V**

4.1. Vehicle OFF, disconnect the harness connector at the K33 HVAC Control Module.

4.2. Test for infinite resistance between the 5 V reference circuit and ground.

⇒ If less than infinite resistance, repair the short to ground on the circuit.

⇓ If infinite resistance

4.3. Test for less than 2 Ω in the 5 V reference circuit end to end.

⇒ If 2 Ω or greater, repair the open/high resistance in the circuit.

⇒ If less than 2 Ω, replace the K33 HVAC Control Module.

⇒ **If greater than 5.2 V**

4.1. Vehicle OFF, disconnect the harness connector at the K33 HVAC Control Module, vehicle in Service Mode.

4.2. Test for less than 1 V between the 5 V reference circuit and ground.

⇒ If 1 V or greater, repair the short to voltage on the circuit.

⇒ If less than 1 V, replace the K33 HVAC Control Module.

⇓ **If between 4.8–5.2 V**

5. Verify the scan tool parameters listed below are less than −37°C (−35°F).
   - Windshield Temperature
   - Passenger Compartment Humidity Sensor Temperature

⇒ **If −37°C (−35°F) or greater**

5.1. Vehicle OFF, disconnect the harness connector at the K33 HVAC Control Module.

5.2. Test for infinite resistance between ground and the signal circuit terminals listed below:
   - Windshield temperature sensor signal terminal 4
   - Passenger compartment humidity sensor temperature signal terminal 5

⇒ If less than infinite resistance, repair the short to ground on the circuit.

⇒ If infinite resistance, replace the K33 HVAC Control Module.

⇓ **If less than −37°C (−35°F)**

6. Install a 3 A fused jumper wire between the low reference circuit terminal 3 and each signal circuit terminal listed below:
   - Windshield temperature sensor signal terminal 4
   - Passenger compartment humidity sensor temperature signal terminal 5

7. Verify the appropriate scan tool parameter listed below is greater than 114°C (238°F).
   - Windshield Temperature
   - Passenger Compartment Humidity Sensor Temperature

⇒ **If 114°C (238°F) or less**

7.1. Vehicle OFF, remove the jumper wire and disconnect the harness connector at the K33 HVAC Control Module, vehicle in Service Mode.

7.2. Test for less than 1 V between the signal circuit terminals listed below and ground.
   - Windshield temperature sensor signal terminal 4
   - Passenger compartment humidity sensor temperature signal terminal 5

⇒ If 1 V or greater, repair the short to voltage on the circuit.

⇓ If less than 1 V

7.3. Test for less than 2 Ω in the signal circuit end to end.

⇒ If 2 Ω or greater, repair the open/high resistance in the circuit.

⇒ If less than 2 Ω, replace the K33 HVAC Control Module.

⇓ **If greater than 114°C (238°F)**

8. Remove the jumper wire.
9. Verify the scan tool Passenger Compartment Humidity parameter is greater than 95%.

⇒ **If 95% or less**

9.1. Vehicle OFF, disconnect the harness connector at the K33 HVAC Control Module, vehicle in Service Mode.

9.2. Test for infinite resistance between the signal circuit terminal 2 and ground.

⇒ If less than infinite resistance, repair the short to ground on the circuit.

⇒ If infinite resistance, replace the K33 HVAC Control Module.

⇓ **If greater than 95%**

10. Install a 3 A fused jumper wire between the passenger compartment humidity sensor signal circuit terminal 2 and the low reference circuit terminal 3.
11. Verify the scan tool Passenger Compartment Humidity Sensor parameter is less than 5%.

⇒ **If 5% or greater**

11.1. Vehicle OFF, remove the jumper wire and disconnect the harness connector at the K33 HVAC Control Module, vehicle in Service Mode.

11.2. Test for less than 1 V between the signal circuit terminal 2 and ground.

⇒ If 1 V or greater, repair the short to voltage on the circuit.

⇓ If less than 1 V

11.3. Test for less than 2 Ω in the signal circuit end to end.

⇒ If 2 Ω or greater, repair the open/high resistance in the circuit.

⇒ If less than 2 Ω, replace the K33 HVAC Control Module.

⇓ **If less than 5%**

12. Test or replace the B160 Windshield Temperature and Inside Moisture Sensor.

Repair Instructions

Perform the *Diagnostic Repair Verification on page 6-123* after completing the repair.

- *HVAC Component Replacement Reference on page 10-87*
- *Control Module References on page 6-3* for HVAC control module replacement, programming and setup

DTC B0183

Diagnostic Instructions

- Perform the *Diagnostic System Check - Vehicle on page 6-91* prior to using this diagnostic procedure.
- Review *Strategy Based Diagnosis on page 6-83* for an overview of the diagnostic approach.
- *Diagnostic Procedure Instructions on page 6-84* provides an overview of each diagnostic category.

DTC Descriptors

DTC B0183: Solar Load Sensor Circuit

For symptom byte information, refer to *Symptom Byte List on page 6-117*.

Diagnostic Fault Information

Circuit	Short to Ground	Open/High Resistance	Short to Voltage	Signal Performance
Signal	B0183 02	B0183 05	B0183 05	1
Low Reference	—	B0163 05, B0183 05	—	—
1. HVAC Malfunction				

Circuit/System Description

The ambient light/sunload sensor integrates the sunload sensor and passenger compartment temperature sensor.

The solar sensor is connected to ground and to a 5 V voltage supply from the HVAC control module. As the sunload increases, the sensor signal voltage also increases. The signal varies between 1.4–4.5 V and is provided to the HVAC control module.

The passenger compartment temperature sensor is a negative temperature coefficient thermistor. A signal and low reference circuit enables the sensor to operate. As the air temperature increases, the sensor resistance decreases. The sensor signal varies between 0–5 V.

Bright or high intensity light causes the vehicles interior temperature to increase. The HVAC system compensates for the increased temperature by diverting additional cool air into the vehicle.

Conditions for Running the DTC

- Vehicle in Service Mode.
- The HVAC control module is ON.

Conditions for Setting the DTC

B0183 02

The HVAC control module detects the sensor signal out of range. The signal voltage is less than 0.1 V for more than 50 ms.

B0183 05

The HVAC control module detects the sensor signal out of range. The signal voltage is greater than 4.9 V for more than 50 ms.

Action Taken When the DTC Sets

The system operates using a default value.

Conditions for Clearing the DTC

The condition for setting the DTC is no longer present.

Reference Information

Schematic Reference

HVAC Schematics on page 10-81

Connector End View Reference

Component Connector End Views on page 11-455

Description and Operation

Automatic HVAC Description and Operation on page 10-144

Electrical Information Reference

- *Circuit Testing on page 11-871*
- *Connector Repairs on page 11-895*
- *Testing for Intermittent Conditions and Poor Connections on page 11-877*
- *Wiring Repairs on page 11-883*

Scan Tool Reference

Control Module References on page 6-3 for scan tool information

Circuit/System Testing

1. Vehicle OFF and all vehicle systems OFF, disconnect the harness connector at the B10B Ambient Light/Sunload Sensor. It may take up to 10 min for all vehicle systems to power down.

   Note: The scan tool must be disconnected from the vehicle before performing the next test.

2. Test for less than 10 Ω between the low reference circuit terminal 6 and ground.

⇒ **If 10 Ω or greater**

2.1. Vehicle OFF, disconnect the harness connectors at the K33 HVAC Control Module.

2.2. Test for less than 2 Ω in the low reference circuit end to end.

⇒ If 2 Ω or greater, repair the open/high resistance in the circuit.

⇒ If less than 2 Ω, replace the K33 HVAC Control Module.

⇓ **If less than 10 Ω**

3. Vehicle in Service Mode.
4. Test for 4.8–5.2 V between the signal circuit terminal 4 and ground.

⇒ **If less than 4.8 V**

4.1. Vehicle OFF, disconnect the harness connectors at the K33 HVAC Control Module.

4.2. Test for infinite resistance between the signal circuit and ground.

⇒ If less than infinite resistance, repair the short to ground on the circuit.

⇓ If infinite resistance

4.3. Test for less than 2 Ω in the signal circuit end to end.

⇒ If 2 Ω or greater, repair the open/high resistance in the circuit.

⇒ If less than 2 Ω, replace the K33 HVAC Control Module.

⇒ **If greater than 5.2 V**

4.1. Vehicle OFF, disconnect the harness connectors at the K33 HVAC Control Module, vehicle in Service Mode.

4.2. Test for less than 1 V between the signal circuit and ground.

⇒ If 1 V or greater, repair the short to voltage on the circuit.

⇒ If less than 1 V, replace the K33 HVAC Control Module.

⇓ **If between 4.8–5.2 V**

5. Test or replace the B10B Ambient Light/Sunload Sensor.
6. Verify DTC B0183 does not set or the symptom does not occur while operating the vehicle within the Conditions for Running the DTC.

⇒ **If the DTC or symptom is not corrected.**

Replace the K33 HVAC Control Module.

⇓ **If the DTC or symptom is corrected.**

7. All OK.

Repair Instructions

Perform the *Diagnostic Repair Verification on page 6-123* after completing the repair.

- *HVAC Component Replacement Reference on page 10-87*
- *Control Module References on page 6-3* for HVAC control module replacement, programming and setup

DTC B0193

Diagnostic Instructions

- Perform the *Diagnostic System Check - Vehicle on page 6-91* prior to using this diagnostic procedure.
- Review *Strategy Based Diagnosis on page 6-83* for an overview of the diagnostic approach.
- *Diagnostic Procedure Instructions on page 6-84* provides an overview of each diagnostic category.

DTC Descriptors

DTC B0193 01: Front Blower Motor Speed Circuit Short to Battery

DTC B0193 06: Front Blower Motor Speed Circuit Low Voltage/Open

Diagnostic Fault Information

Circuit	Short to Ground	Open/High Resistance	Short to Voltage	Signal Performance
B+	B0193 06	B0193 06	—	—
Control	B0193 06	B0193 06	B0193 01	—
Ground	—	B0193 06	—	—

Circuit/System Description

The blower motor control module is an interface between the HVAC control module and the blower motor. The blower motor control module has 4 circuits: a B+ input, a signal input from the HVAC control module, a B+ output to the blower motor, and a low side pulse width modulation (PWM) output. The HVAC control module provides a low side (PWM) signal to the blower motor control module in order to request the blower motor speed. The blower motor control module grounds the blower motor using a low side PWM signal in order to vary the blower motor speed.

Conditions for Running the DTC

- Vehicle in Service Mode.
- The HVAC control module is ON.

Conditions for Setting the DTC

B0193 01

The voltage at the HVAC control module output to the blower motor control module is always high.

B0193 06

The voltage at the HVAC control module output to the blower motor control module is always low or fluctuating.

Action Taken When the DTC Sets

The blower motor is inoperative.

Conditions for Clearing the DTC

The condition for setting the DTC is no longer present.

Diagnostic Aids

Inspect the motor shaft for rust or other foreign material which may prohibit proper motor operation.

If the motor operates properly please reinstall it and check for Preliminary Information or Technical Service Bulletins.

Reference Information

Schematic Reference

HVAC Schematics on page 10-81

Connector End View Reference

Component Connector End Views on page 11-455

Description and Operation

Automatic HVAC Description and Operation on page 10-144

Electrical Information Reference

- *Circuit Testing on page 11-871*
- *Connector Repairs on page 11-895*
- *Testing for Intermittent Conditions and Poor Connections on page 11-877*
- *Wiring Repairs on page 11-883*

Scan Tool Reference

Control Module References on page 6-3 for scan tool information

Circuit/System Testing

1. Vehicle OFF and all vehicle systems OFF, disconnect the X1 harness connector at the K8 Blower Motor Control Module. It may take up to 2 min for all vehicle systems to power down.
2. Test for less than 10 Ω between the ground circuit terminal 5 and ground.

⇒ **If 10 Ω or greater**

2.1. Test for less than 2 Ω in the ground circuit end to end.

⇒ If 2 Ω or greater, repair the open/high resistance in the circuit.

⇒ If less than 2 Ω, repair the open/high resistance in the ground connection.

⇓ **If less than 10 Ω**

3. Vehicle in Service Mode.
4. Verify a test lamp illuminates between the B+ circuit terminal 6 and ground.

⇒ **If the test lamp does not illuminate and the circuit fuse is good**

4.1. Vehicle OFF, remove the test lamp.

4.2. Test for less than 2 Ω in the B+ circuit end to end.

⇒ If 2 Ω or greater, repair the open/high resistance in the circuit.

⇒ If less than 2 Ω, verify the fuse is not open and there is voltage at the fuse.

⇒ **If the test lamp does not illuminate and the circuit fuse is open**

4.1. Vehicle OFF, remove the test lamp.

4.2. Test for infinite resistance between the B+ circuit terminal 6 and ground.

⇒ If less than infinite resistance, repair the short to ground on the circuit.

⇓ If infinite resistance

4.3. Disconnect the X2 harness connector at the K8 Blower Motor Control Module and disconnect the harness connector at the M8 Blower Motor.

4.4. Test for infinite resistance between the M8 Blower Motor B+ circuit terminal 1 and ground.

⇒ If less than infinite resistance, repair the short to ground on the circuit.

⇒ If infinite resistance, test or replace the M8 Blower Motor.

⇓ **If the test lamp illuminates**

5. Vehicle OFF, remove the test lamp and disconnect the X2 harness connector at the K33 HVAC Control Module, vehicle in Service Mode.
6. Test for less than 1 V between the K8 Blower Motor Control Module control circuit terminal 3 and ground.

⇒ **If 1 V or greater**

Repair the short to voltage on the circuit.

⇓ **If less than 1 V**

7. Vehicle OFF.
8. Test for infinite resistance between the control circuit and ground.

⇒ **If less than infinite resistance**

Repair the short to ground on the circuit.

⇓ **If infinite resistance**

9. Test for less than 2 Ω in the control circuit end to end.

⇒ **If 2 Ω or greater**

Repair the open/high resistance in the circuit.

⇓ **If less than 2 Ω**

10. Connect the harness connectors at the K8 Blower Motor Control Module and the K33 HVAC Control Module, and disconnect the harness connector at the M8 Blower Motor, vehicle in Service Mode and blower ON.
11. Verify a test lamp illuminates between the B+ circuit terminal 1 and ground.

⇒ **If the test lamp does not illuminate**

11.1. Vehicle OFF, disconnect the X2 harness connector at the K8 Blower Motor Control Module.

11.2. Test for less than 2 Ω in the B+ circuit end to end.

⇒ If 2 Ω or greater, repair the open/high resistance in the circuit.

⇒ If less than 2 Ω replace the K8 Blower Motor Control Module.

⇓ **If the test lamp illuminates**

12. Connect a test lamp between the control circuit terminal 2 and the B+ circuit terminal 1.
13. Verify the test lamp becomes progressively brighter as the blower speed is increased and progressively dimmer as the blower speed is decreased.

⇒ **If the test lamp does not illuminate**

13.1. Vehicle OFF, disconnect the X2 harness connector at the K8 Blower Motor Control Module, vehicle in Service Mode.

13.2. Test for less than 1 V between the M8 Blower Motor control circuit terminal 1 and ground.

⇒ If 1 V or greater, repair the short to voltage on the circuit.

⇓ If less than 1 V

13.3. Test for less than 2 Ω in the control circuit end to end.

⇒ If 2 Ω or greater, repair the open/high resistance in the circuit.

⇓ If less than 2 Ω

13.4. Replace the K8 Blower Motor Control Module.

13.5. Verify the symptom or DTC was corrected.

⇒ If the symptom or DTC was not corrected, replace the K33 HVAC Control Module.

⇓ If the symptom or DTC was corrected

13.6. All OK.

⇒ **If the test lamp illuminates, but does not change in brightness**

13.1. Vehicle OFF, disconnect the X2 harness connector at the K8 Blower Motor Control Module.

13.2. Test for infinite resistance between the control circuit and ground.

⇒ If less than infinite resistance, repair the short to ground on the circuit.

⇒ If infinite resistance, replace the K8 Blower Motor Control Module.

⇓ **If the test lamp changes in brightness as the blower speed is changed**

14. Test or replace the M8 Blower Motor.

Repair Instructions

Perform the *Diagnostic Repair Verification on page 6-123* after completing the repair.

- *HVAC Component Replacement Reference on page 10-87*
- *Control Module References on page 6-3* for HVAC control module replacement, programming and setup

DTC B0223, B0233, B023A, or B0408

Diagnostic Instructions

- Perform the *Diagnostic System Check - Vehicle on page 6-91* prior to using this diagnostic procedure.
- Review *Strategy Based Diagnosis on page 6-83* for an overview of the diagnostic approach.
- *Diagnostic Procedure Instructions on page 6-84* provides an overview of each diagnostic category.

DTC Descriptor

DTC B0223 01: Recirculate Position Command 1 Circuit Short to Battery
DTC B0223 06: Recirculate Position Command 1 Circuit Low Voltage/Open
DTC B0233 01: Air Flow Control Circuit Short to Battery
DTC B0233 06: Air Flow Control Circuit Low Voltage/Open
DTC B023A 02: HVAC Actuators Supply Voltage Short to Ground
DTC B0408 01: Main Temperature Control Circuit Short to Battery
DTC B0408 06: Main Temperature Control Circuit Low Voltage/Open

Diagnostic Fault Information

Circuit	Short to Ground	Open/High Resistance	Short to Voltage	Signal Performance
Stepper Motors 12 V Control	B023A 02, B0223 06, B0233 06, B0408 06,	B0223 06, B0233 06, B0408 06,	—	—
Recirculation Actuator Control 1	B0223 06	B0223 06	B0223 01	1
Recirculation Actuator Control 2	B0223 06	B0223 06	B0223 01	1
Recirculation Actuator Control 3	B0223 06	B0223 06	B0223 01	1
Recirculation Actuator Control 4	B0223 06	B0223 06	B0223 01	1
Air Temperature Actuator Control 1	B0408 06	B0408 06	B0408 01	1
Air Temperature Actuator Control 2	B0408 06	B0408 06	B0408 01	1
Air Temperature Actuator Control 3	B0408 06	B0408 06	B0408 01	1
Air Temperature Actuator Control 4	B0408 06	B0408 06	B0408 01	1
Mode Actuator Control 1	B0233 06	B0233 06	B0233 01	1
Mode Actuator Control 2	B0233 06	B0233 06	B0233 01	1
Mode Actuator Control 3	B0233 06	B0233 06	B0233 01	1
Mode Actuator Control 4	B0233 06	B0233 06	B0233 01	1
1. HVAC Malfunction				

Circuit/System Description

Stepper motors are used for temperature regulation, air distribution control, and recirculation door control.

With the switches, buttons, and dials on the HVAC controls, air temperature door position, mode door position, and recirculation door position can be selected. The selected values are passed to the HVAC control module via serial data. The HVAC control module supplies a switched 12 V control voltage to the stepper motors and energizes the 4 stepper motor coils with a pulsed ground signal. The stepper motors move the appropriate doors to the requested positions.

Conditions for Running the DTC

- Vehicle in Service Mode.
- The HVAC control module is ON.

Conditions for Setting the DTC

B023A 02

The stepper motors supply output is shorted to ground.

B0223 01, B0233 01, B023A 01, or B0408 01

At least one control circuits of the appropriate stepper motor is shorted to voltage when motor starts moving. Faults are not detected when motor is already running or target position is already reached.

B0223 06, B0233 06, B0233 06, or B0408 06

At least one control circuits of the appropriate stepper motor is shorted to ground or open when motor starts moving. Faults are not detected when motor is already running or target position is already reached.

Action Taken When the DTC Sets

B023A 02

- The affected output will be switched off for hardware protection.
- All stepper motors are deactivated.

B0223, B0233, B023A, or 0408

- The affected output will be switched off for hardware protection.
- The affected stepper motor is deactivated.

Conditions for Clearing the DTC

The condition for setting the DTC is no longer present.

Reference Information

Schematic Reference

HVAC Schematics on page 10-81

Connector End View Reference

Component Connector End Views on page 11-455

Description and Operation

Automatic HVAC Description and Operation on page 10-144

Electrical Information Reference

- *Circuit Testing on page 11-871*
- *Connector Repairs on page 11-895*
- *Testing for Intermittent Conditions and Poor Connections on page 11-877*
- *Wiring Repairs on page 11-883*

Scan Tool Reference

Control Module References on page 6-3 for scan tool information

Circuit/System Verification

1. Perform the*Actuator Recalibration on page 10-133* procedure.
2. Verify the concern or DTC has been corrected.

⇒ **If the concern or DTC has not been corrected**

2.1. Verify DTC B023A is not set.

⇒ If DTC B023A is set, refer to DTC B023A.

⇒ If DTC B023A is not set, refer to DTC B0223, B022A, B0233, or B0408.

⇓ **If the concern or DTC has been corrected**

3. All OK.

Circuit/System Testing

DTC B023A

1. Vehicle OFF and all vehicle systems OFF, disconnect the harness connector at the components listed below. It may take up to 2 min for all vehicle systems to power down.
   - M37 Mode Door Actuator
   - M46 Air Recirculation Door Actuator
   - M6 Air Temperature Door Actuator
2. Disconnect the X3 harness connector at the K33 HVAC Control Module.
3. Test for infinite resistance between the K33 HVAC Control Module 12 V control circuit terminal 15 and ground.

⇒ **If less than infinite resistance**

Repair the short to ground on the circuit.

⇓ **If infinite resistance**

4. Vehicle in Service Mode.
5. Test for less than 1 V between the K33 HVAC Control Module 12 V control circuit terminal 15 and ground.

⇒ **If 1 V or greater**

Repair the short to voltage on the circuit.

⇓ **If less than 1 V**

6. Connect the X3 harness connector at the K33 HVAC Control Module, vehicle in Service Mode.
7. Clear all DTCs.
8. Verify DTC B023A is not set.

⇒ **If the DTC is set.**

Replace the K33 HVAC Control Module.

⇓ **If the DTC is not set.**

9. Verify DTC B023A does not set after connecting each of the components listed below one at a time and operating them through their full range.
   - M37 Mode Door actuator
   - M46 Air Recirculation Door Actuator
   - M6 Air Temperature Door Actuator

⇒ **If the DTC sets after connecting one of the components**

Replace the component that was connected immediately before the DTC set.

⇓ **If the DTC does not set**

10. All OK.

DTC B0223, B022A, B0233, or B0408

1. Vehicle OFF, disconnect the harness connector at the appropriate door actuator, vehicle in Service Mode.
2. Verify a test lamp flashes when connected between the 12 V control circuit terminal 2 and ground.

⇒ **If the test lamp does not flash**

2.1. Vehicle OFF, remove the test lamp and disconnect the harness connector at the K33 HVAC Control Module.

2.2. Test for less than 2 Ω in the 12 V control circuit end to end.

⇒ If 2 Ω or greater, repair the open/high resistance in the circuit.

⇒ If less than 2 Ω, replace the K33 HVAC Control Module.

⇒ **If the test lamp flashes**

3. Connect a test lamp between each control circuit listed below and B+.
   - Control Circuit - terminal 1
   - Control Circuit - terminal 3
   - Control Circuit - terminal 4
   - Control Circuit - terminal 6
4. Command the appropriate door actuator in both directions.
5. Verify the test lamp turns ON and then OFF during at least one of the directional commands.

⇒ **If the test lamp is always ON**

5.1. Vehicle OFF, remove the test lamp and disconnect the harness connector at the K33 HVAC Control Module.

5.2. Test for infinite resistance between the control circuit and ground.

⇒ If less than infinite resistance, repair the short to ground on the circuit.

⇒ If infinite resistance, replace the K33 HVAC Control Module.

⇒ **If the test lamp is always OFF**

5.1. Vehicle OFF, remove the test lamp and disconnect the harness connector at the K33 HVAC Control Module, vehicle in Service Mode.

5.2. Test for less than 1 V between the control circuit and ground.

⇒ If 1 V or greater, repair the short to voltage on the circuit.

⇓ If less than 1 V

5.3. Vehicle OFF

5.4. Test for less than 2 Ω in the control circuit end to end.

⇒ If 2 Ω or greater, repair the open/high resistance is the circuit.

⇒ If less than 2 Ω, replace the K33 HVAC Control Module.

⇓ **If the test lamp turns ON and then OFF**

6. Replace the door actuator.

Repair Instructions

Perform the *Diagnostic Repair Verification on page 6-123* after completing the repair.

- *HVAC Component Replacement Reference on page 10-87*
- *Control Module References on page 6-3* for HVAC control module replacement, programming and setup

DTC B0468, B046B, or B046C

Diagnostic Instructions

- Perform the *Diagnostic System Check - Vehicle on page 6-91* prior to using this diagnostic procedure.
- Review *Strategy Based Diagnosis on page 6-83* for an overview of the diagnostic approach.
- *Diagnostic Procedure Instructions on page 6-84* provides an overview of each diagnostic category.

DTC Descriptors

DTC B0468 01: Auxiliary Heater Coolant Pump Circuit Short to Battery
DTC B0468 06: Auxiliary Heater Coolant Pump Circuit Low Voltage/Open
DTC B046B 00: Auxiliary Heater Coolant Pump Feedback Circuit
DTC B046C 02: Auxiliary Heater Coolant Pump Enable Circuit Short to Ground
DTC B046C 05: Auxiliary Heater Coolant Pump Enable Circuit High Voltage/Open

Diagnostic Fault Information

Circuit	Short to Ground	Open/High Resistance	Short to Voltage	Signal Performance
B+	B046B 00	B046B 00	—	—
Control Terminal 1	B046C 02	B0468 06, B046B 00, B046C 05	B046C 05	—
Control Terminal 3	B0468 06	B0468 06	B0468 01	—
Signal	B046B 00	B046B 00	B046B 00	—
Ground	—	B046B 00	—	—

Circuit/System Description

The auxiliary heater coolant pump is controlled with a pulse-width modulated control sent from the HVAC control module to the auxiliary heater coolant pump. The higher the duty cycle on the control the higher the pump speed. An enable signal from the HVAC control module to the auxiliary heater coolant pump provides overall control of the pump. When voltage is present, the pump can operate. The auxiliary heater coolant pump provides a hard-wired pulse-width modulated feedback signal to the HVAC control module. During normal operation, this feedback signal provides pump speed information.

Conditions for Running the DTC

B0468 01

- The 12 V battery system voltage is greater than 9 V.
- Vehicle ON.
- The HVAC system is turned ON.

B0468 06

- The 12 V battery system voltage is greater than 9 V.
- Vehicle ON.
- The HVAC system is turned ON.

B046B 00

- The 12 V battery system voltage is greater than 9 V.
- Vehicle ON.
- The HVAC system is turned ON.

B046C 02

- The 12 V battery system voltage is greater than 9 V.
- Vehicle ON.
- The HVAC system is turned ON.

B046C 05

- The 12 V battery system voltage is greater than 9 V.
- Vehicle ON.
- The HVAC system is turned ON.

Conditions for Setting the DTC

B0468 01

Requested PWM is not zero and the feedback from the Auxiliary Heater is always High.

B0468 06

Feedback from the auxiliary heater voltage is always low or floating.

B046B 00

PWM duty cycle/ frequency out of range

B046C 02

PWM duty cycle/ frequency out of range

B046C 05

PWM duty cycle/ frequency out of range

Action Taken When the DTC Sets

The auxiliary heater coolant pump is disabled.

Conditions for Clearing the DTC

B0468 01

Feedback of auxiliary heater output corresponds with requested PWM signal.

B0468 06

Feedback of auxiliary heater output corresponds with requested PWM signal.

B046B 00

PWM duty cycle / frequency is within defined range

B046C 02

Requested status of the output is ON and feedback shows normal operation

B046C 05

Requested status of the output is OFF and feedback shows normal operation

Diagnostic Aids

A DTC B0468 may cause a DTC B046B or DTC B046C to set.

Reference Information

Schematic Reference

HVAC Schematics on page 10-81

Connector End View Reference

Component Connector End Views on page 11-455

Description and Operation

Automatic HVAC Description and Operation on page 10-144

Electrical Information Reference

- *Circuit Testing on page 11-871*
- *Connector Repairs on page 11-895*
- *Testing for Intermittent Conditions and Poor Connections on page 11-877*
- *Wiring Repairs on page 11-883*

Scan Tool Reference

Control Module References on page 6-3 for scan tool information

Circuit/System Testing

1. Vehicle OFF and all vehicle systems OFF, disconnect the harness connector at the G36 Auxiliary Heater Coolant Pump. It may take up to 10 minutes for all vehicle systems to power down.

   Note: The scan tool must be disconnected from the vehicle before performing the next test.

2. Test for less than 10 Ω between the ground circuit terminal 4 and ground.

⇒ **If 10 Ω or greater**

2.1. Vehicle OFF.

2.2. Test for less than 2 Ω in the ground circuit end to end.

⇒ If 2 Ω or greater, repair the open/high resistance in the circuit.

⇒ If less than 2 Ω, repair the open/high resistance in the ground connection.

⇓ **If less than 10 Ω**

3. Vehicle in Service Mode.
4. Verify a test lamp illuminates between the B+ circuit terminal 5 and ground.

⇒ **If the test lamp does not illuminate and the circuit fuse is good**

4.1. Vehicle OFF, remove the test lamp.

4.2. Test for less than 2 Ω in the B+ circuit end to end.

⇒ If 2 Ω or greater, repair the open/high resistance in the circuit.

⇒ If less than 2 Ω, verify the fuse is not open and there is voltage at the fuse.

⇒ **If the test lamp does not illuminate and the circuit fuse is open**

4.1. Vehicle OFF, remove the test lamp.

4.2. Test for infinite resistance between the B+ circuit and ground.

⇒ If less than infinite resistance, repair the short to ground on the circuit.

⇒ If infinite resistance, replace the G36 Auxiliary Heater Coolant Pump.

⇓ **If the test lamp illuminates**

5. Connect a test lamp between the control circuit terminal 1 and the ground circuit terminal 4, Vehicle in Service Mode and the HVAC system OFF.

6. Verify the test lamp turns ON and OFF when commanding the K33 HVAC Control Module Auxiliary Coolant Pump Speed Command On and Off with a scan tool.

⇒ **If the test lamp is always OFF**

6.1. Vehicle OFF, remove the test lamp and disconnect the X2 harness connector at the K33 HVAC Control Module.

6.2. Test for infinite resistance between the control circuit and ground.

⇒ If less than infinite resistance, repair the short to ground on the circuit.

⇓ If infinite resistance

6.3. Test for less than 2 Ω in the control circuit end to end.

⇒ If 2 Ω or greater, repair the open/high resistance in the circuit.

⇒ If less than 2 Ω, replace the K33 HVAC Control Module.

⇒ **If the test lamp is always ON**

6.1. Vehicle OFF, remove the test lamp and disconnect the X2 harness connector at the K33 HVAC Control Module, vehicle in Service Mode.

6.2. Test for less than 1 V between the control circuit and ground.

⇒ If 1 V or greater, repair the short to voltage on the circuit.

⇒ If less than 1 V, replace the K33 HVAC Control Module.

⇓ **If the test lamp turns ON and OFF**

7. Remove the test lamp.
8. Install a 3 A fused jumper wire at the ground circuit terminal 4, Vehicle in Service Mode.
9. Verify the scan tool K33 HVAC Control Module Auxiliary Coolant Pump Speed Feedback Frequency parameter changes while rapidly tapping the fused jumper wire to the signal circuit terminal 2.

⇒ **If the parameter does not change**

9.1. Vehicle in Service Mode, remove the jumper wire and disconnect the harness connector at the K33 HVAC Control Module.

9.2. Test for less than 1 V between the signal circuit and ground.

⇒ If 1 V or greater, repair the short to voltage on the circuit.

⇓ If less than 1 V

9.3. Vehicle OFF.

9.4. Test for infinite resistance between the signal circuit terminal 2 and ground.

⇒ If less than infinite resistance, repair the short to ground on the circuit.

⇓ If infinite resistance

9.5. Test for less than 2 Ω in the signal circuit end to end.

⇒ If 2 Ω or greater, repair the open/high resistance in the circuit.

⇒ If less than 2 Ω, replace the K33 HVAC Control Module.

⇓ **If the parameter changes**

10. Remove the jumper wire and connect a DMM between the control circuit terminal 3 and ground, vehicle in Service Mode.
11. Verify the resistance reading changes when commanding the K33 HVAC Control Module Auxiliary Coolant Pump Speed Command On and Off with a scan tool.

⇒ **If the resistance reading does not change**

11.1. Vehicle in Service Mode, disconnect the harness connector at the K33 HVAC Control Module.

11.2. Test for less than 1 V between the control circuit and ground.

⇒ If 1 V or greater, repair the short to voltage on the circuit.

⇓ If less than 1 V

11.3. Vehicle OFF.

11.4. Test for infinite resistance between the control circuit and ground.

⇒ If less than infinite resistance, repair the short to ground on the circuit.

⇓ If infinite resistance

11.5. Test for less than 2 Ω in the control circuit end to end.

⇒ If 2 Ω or greater, repair the open/high resistance in the circuit.

⇒ If less than 2 Ω, replace the K33 HVAC Control Module

⇓ **If the resistance reading changes**

12. Replace the G36 Auxiliary Heater Coolant Pump.

Repair Instructions

Perform the *Diagnostic Repair Verification on page 6-123* after completing the repair.

- *HVAC Component Replacement Reference on page 10-87*
- *Control Module References on page 6-3* for HVAC control module replacement, programming and setup

DTC B046A

Diagnostic Instructions

- Perform the *Diagnostic System Check - Vehicle on page 6-91* prior to using this diagnostic procedure.
- Review *Strategy Based Diagnosis on page 6-83* for an overview of the diagnostic approach.
- *Diagnostic Procedure Instructions on page 6-84* provides an overview of each diagnostic category.

DTC Descriptors

DTC B046A 02: Auxiliary Heater Coolant Pump Temperature Circuit Short to Ground
DTC B046A 05: Auxiliary Heater Coolant Pump Temperature Circuit Short to Battery or Open

Diagnostic Fault Information

Circuit	Short to Ground	Open/High Resistance	Short to Voltage	Signal Performance
Signal circuit	B046A 02	B046A 05	B046A 05	—
Low Reference	—	B018A 05, B048C 05, B048F 05	—	—

Circuit Description

The HVAC control module supplies the coolant heater temperature sensor with a low reference circuit and 5 V signal circuit. The HVAC control module determines the voltage drop across the sensor, which is proportional to temperature. As the temperature increases, the sensor resistance decreases and the voltage signal decreases. As the temperature decreases, the sensor resistance increases and the voltage signal increases.

Conditions for Running the DTC

Vehicle ON or vehicle in Service Mode.

Conditions for Setting the DTC

The HVAC control module detects the coolant heater temperature sensor signal circuit is less than -38° C (-36°F) or greater than 113°C (235°F).

Action Taken When the DTC Sets

A default value is used when the DTC is set.

Conditions for Clearing the DTC

- The DTC will become history if the conditions for setting the DTC are no longer present.
- The history DTC will clear after 100 fault-free vehicle ON cycles.

Reference Information

Schematic Reference

HVAC Schematics on page 10-81

Connector End View Reference

Component Connector End Views on page 11-455

Description and Operation

Automatic HVAC Description and Operation on page 10-144

Electrical Information Reference

- *Circuit Testing on page 11-871*
- *Connector Repairs on page 11-895*
- *Testing for Intermittent Conditions and Poor Connections on page 11-877*
- *Wiring Repairs on page 11-883*

Scan Tool Reference

Control Module References on page 6-3 for scan tool information

Circuit/System Testing

1. Vehicle OFF and all vehicle systems OFF, disconnect the harness connector at the B135 Coolant Heater Temperature Sensor. It may take up to 10 min for all vehicle systems to power down.

   Note: The scan tool must be disconnected from the vehicle before performing the next test.

2. Test for less than 10 Ω between the low reference circuit terminal 2 and ground.

⇒ **If 10 Ω or greater**

2.1. Vehicle OFF, disconnect the X1 harness connector at the K33 HVAC Control Module.

2.2. Test for less than 2 Ω in the low reference circuit end to end.

⇒ If 2 Ω or greater, repair the open/high resistance in the circuit.

⇒ If less than 2 Ω, replace the K33 HVAC Control Module.

⇓ **If less than 10 Ω**

3. Vehicle in Service Mode.

4. Verify the scan tool Heater Core Coolant Temperature Sensor parameter is less than −37° C (−35°F).

⇒ **If −37°C (−35°F) or greater**

4.1. Vehicle OFF, disconnect the X1 harness connector at the K33 HVAC Control Module.

4.2. Test for infinite resistance between the signal circuit terminal 1 and ground.

⇒ If less than infinite resistance, repair the short to ground on the circuit.

⇒ If infinite resistance, replace the K33 HVAC Control Module.

⇓ **If less than −37°C (−35°F)**

5. Install a 3 A fused jumper wire between the signal circuit terminal 1 and the low reference circuit terminal 2.
6. Verify the scan tool Heater Core Coolant Temperature Sensor parameter is greater than 113°C (235°F).

⇒ **If 113°C (235°F) or less**

6.1. Vehicle OFF, remove the jumper wire and disconnect the X1 harness connector at the K33 HVAC Control Module, vehicle in Service Mode.

6.2. Test for less than 1 V between the signal circuit and ground.

⇒ If 1 V or greater, repair the short to voltage on the circuit.

⇓ If less than 1 V

6.3. Vehicle OFF.

6.4. Test for less than 2 Ω in the signal circuit end to end.

⇒ If 2 Ω or greater, repair the open/high resistance in the circuit.

⇒ If less than 2 Ω, replace the K33 HVAC Control Module.

⇓ **If greater than 113°C (235°F)**

7. Test or replace the B135 Coolant Heater Temperature Sensor.

Repair Instructions

Perform the *Diagnostic Repair Verification on page 6-123* after completing the repair.

- *HVAC Component Replacement Reference on page 10-87*
- *Control Module References on page 6-3* for HVAC control module replacement, programming and setup

DTC P0071-P0073

Diagnostic Instructions

- Perform the *Diagnostic System Check - Vehicle on page 6-91* prior to using this diagnostic procedure.
- Review *Strategy Based Diagnosis on page 6-83* for an overview of the diagnostic approach.
- *Diagnostic Procedure Instructions on page 6-84* provides an overview of each diagnostic category.

DTC Descriptors

DTC P0071: Ambient Air Temperature Sensor Performance
DTC P0072: Ambient Air Temperature Sensor Circuit Low Voltage
DTC P0073: Ambient Air Temperature Sensor Circuit High Voltage

Diagnostic Fault Information

Circuit	Short to Ground	Open/High Resistance	Short to Voltage	Signal Performance
Signal	P0072	P0072	P0073	P0071
Low Reference	—	P0073	—	P0071

Circuit/System Description

The Hybrid/EV Powertrain Control Module 2 supplies the ambient air temperature sensor with a low reference circuit and 5 V signal circuit. The Hybrid/EV Powertrain Control Module 2 determines the voltage drop across the sensor, which is proportional to temperature. As the air temperature increases, the sensor resistance decreases. As the air temperature decreases, the sensor resistance increases.

Conditions for Running the DTC

P0071

- The 12 V battery voltage is greater than or equal to 10.2 V.
- The ignition is in either run-crank active or charging active mode.
- No fault on the air conditioning compressor module.
- EV electronics coolant pump off soak time is greater than 1 hour.
- Air conditioning compressor module off soak time is greater than 4 hours.
- Propulsion system off time is greater than 4 hours.
- The air conditioning compressor module CPU temperature is greater than −10°C (14°F).
- None of the following DTCs are set; P0111, P0112, P0113, P0114, P0115, P0116, P0117, P0118, P0119, P0CED, P0072, P0073, or U0100.

P0072 – P0073

- Vehicle ON.
- The 12 V battery voltage is greater than or equal to 10.2 V.

Conditions for Setting the DTC

P0071

During the first 11 s of run time after the soak conditions have all been met, the difference between the outside air temperature and the high side refrigerant pressure converted to temperature is greater than 20°C (68°F).

P0072

The outside air temperature circuit reference voltage is less than 0.1 V.

P0073

The outside air temperature circuit reference voltage is greater than 4.9 V.

Action Taken When the DTC Sets

- DTC P0071–P0073 are type B DTCs.
- The DIC will display SERVICE A/C SYSTEM.
- The system operates using a default value.

Conditions for Clearing the DTC

- The DTC will become history if the Hybrid/EV powertrain control module 2 no longer detects the condition that set the DTC.
- The history DTC will clear after 40 fault-free ignition cycles.

Reference Information

Schematic Reference

HVAC Schematics on page 10-81

Connector End View Reference

Component Connector End Views on page 11-455

Description and Operation

Automatic HVAC Description and Operation on page 10-144

Electrical Information Reference

- *Circuit Testing on page 11-871*
- *Connector Repairs on page 11-895*
- *Testing for Intermittent Conditions and Poor Connections on page 11-877*
- *Wiring Repairs on page 11-883*

Scan Tool Reference

Control Module References on page 6-3 for scan tool information

Special Tools

GE-50300 ACR Air Conditioning Service Center

Circuit/System Verification

1. Vehicle in Service Mode.
2. Verify DTC P0072 or P0073 is not set.

⇒ **If DTC P0072 or P0073 is set**

Refer to Circuit/System Testing.

⇓ **If DTC P0072 or P0073 is not set**

3. Install the *GE-50300* ACR Air Conditioning Service Center.
4. Verify the high side pressure reading on the Air Conditioning Service Center is within 10% of the scan tool Hybrid/EV Powertrain Control Module 2 A/C High Side Pressure Sensor parameter.

⇒ **If the reading is not within 10%**

Refer to *DTC P0532 or P0533 on page 10-112*.

⇓ **If the reading is within 10%**

5. Verify the scan tool Ambient Air Temperature parameter is accurate within 10% as measured with a thermometer.

⇒ **If the scan tool Ambient Air Temperature parameter is not accurate within 10%**

Refer to Circuit/System Testing.

⇓ **If the scan tool Ambient Air Temperature parameter is accurate within 10%**

6. Refer to *Air Conditioning (A/C) System Performance Test on page 10-5*.

Circuit/System Testing

Note: You must perform the Circuit/System Verification before proceeding with Circuit/System Testing.

1. Vehicle OFF and all vehicle systems OFF, disconnect the harness connector at the B9 Ambient Air Temperature Sensor. It may take up to 10 min for all vehicle systems to power down.

   Note: The scan tool must be disconnected from the vehicle before performing the next test.

2. Test for less than 10 Ω between the low reference circuit terminal B and ground.

⇒ **If 10 Ω or greater**

2.1. Vehicle OFF, disconnect the X1 harness connector at the K114B Hybrid/EV Powertrain Control Module 2.

2.2. Test for less than 2 Ω in the low reference circuit end to end.

⇒ If 2 Ω or greater, repair the open/high resistance in the circuit.

⇒ If less than 2 Ω, replace the K114B Hybrid/EV Powertrain Control Module 2.

⇓ **If less than 10 Ω**

3. Vehicle in Service Mode.
4. Verify the scan tool Ambient Air Temperature parameter is less than−37°C (−35°F).

⇒ **If −37°C (−35°F) or greater**

4.1. Vehicle OFF, disconnect the X1 harness connector at the K114B Hybrid/EV Powertrain Control Module 2.

4.2. Test for infinite resistance between the signal circuit terminal A and ground.

⇒ If less than infinite resistance, repair the short to ground on the circuit.

⇒ If infinite resistance, replace the K114B Hybrid/EV Powertrain Control Module 2.

⇓ **If less than −37°C (−35°F)**

5. Install a 3 A fused jumper wire between the signal circuit terminal A and the low reference circuit terminal B.
6. Verify the scan tool Ambient Air Temperature parameter is greater than 113°C (235°F).

⇒ **If 113°C (235°F) or less**

6.1. Vehicle OFF, remove the jumper wire and disconnect the X1 harness connector at the K114B Hybrid/EV Powertrain Control Module 2, vehicle in Service Mode.

6.2. Test for less than 1 V between the signal circuit and ground.

⇒ If 1 V or greater, repair the short to voltage on the circuit.

⇓ If less than 1 V

6.3. Vehicle OFF.

6.4. Test for less than 2 Ω in the signal circuit end to end.

⇒ If 2 Ω or greater, repair the open/high resistance in the circuit.

⇒ If less than 2 Ω, replace the K114B Hybrid/EV Powertrain Control Module 2.

⇓ **If greater than 113°C (235°F)**

7. Test or replace the B9 Ambient Air Temperature Sensor.

Repair Instructions

Perform the *Diagnostic Repair Verification on page 6-123* after completing the repair.

- *HVAC Component Replacement Reference on page 10-87*
- *Control Module References on page 6-3* for K114B Hybrid/EV Powertrain Control Module 2 replacement, programming and setup

DTC P0532 or P0533

Diagnostic Instructions

- Perform the *Diagnostic System Check - Vehicle on page 6-91* prior to using this diagnostic procedure.
- Review *Strategy Based Diagnosis on page 6-83* for an overview of the diagnostic approach.
- *Diagnostic Procedure Instructions on page 6-84* provides an overview of the diagnostic category.

DTC Descriptors

DTC P0532: Air Conditioning (A/C) Refrigerant Pressure Sensor Circuit Low Voltage

DTC P0533: Air Conditioning (A/C) Refrigerant Pressure Sensor Circuit High Voltage

Diagnostic Fault Information

Circuit	Short to Ground	Open/High Resistance	Short to Voltage	Signal Performance
5 V Reference	P0532, P0641	P0532	P0533	—
Signal	P0532	P0532	P0533	—
Low Reference	—	P0533	—	—

Circuit/System Description

The engine control module (ECM) monitors the high side refrigerant pressure through the A/C refrigerant pressure sensor. The ECM supplies a 5 V reference and a low reference to the sensor. Changes in the A/C refrigerant pressure cause the sensor signal to the ECM to vary. When the pressure is high, the signal voltage is high. When the pressure is low, the signal voltage is low. The ECM may use this information to turn the cooling fans on as well as to monitor clutch engagement. The HVAC module will receive the A/C refrigerant pressure information from the ECM via serial data.

Conditions for Running the DTC

- Engine is running.
- Any of the conditions for setting the DTC are met for 15 s.
- Battery voltage is between 11–18 V.

Conditions for Setting the DTC

P0532

The ECM detects that the A/C pressure is less than 1 psi (0.25 V).

P0533

The ECM detects that the A/C pressure is more than 428 psi (4.92 V).

Action Taken When the DTC Sets

- The A/C compressor is disabled.
- The ECM will illuminate the malfunction indicator lamp (MIL).

Conditions for Clearing the DTC

The condition for setting the DTC is no longer present.

Diagnostic Aids

A malfunction within the refrigerant system causing high pressure can cause this DTC to set.

Reference Information

Schematic Reference

HVAC Schematics on page 10-81

Connector End View Reference

Component Connector End Views on page 11-455

Description and Operation

Automatic HVAC Description and Operation on page 10-144

Electrical Information Reference

- *Circuit Testing on page 11-871*
- *Connector Repairs on page 11-895*
- *Testing for Intermittent Conditions and Poor Connections on page 11-877*
- *Wiring Repairs on page 11-883*

DTC Type Reference

Powertrain Diagnostic Trouble Code (DTC) Type Definitions on page 6-92

Scan Tool Reference

Control Module References on page 6-3 for scan tool information

Circuit/System Verification

1. Vehicle in Service Mode.
2. Verify the scan tool engine control module A/C High Side Pressure Sensor parameter is between 6.8 kPa (1 psi) and 2950 kPa (428 psi).

⇒ **If not between 6.8 kPa (1 psi) and 2950 kPa (428 psi)**

Refer to Circuit/System Testing.

⇓ **If between 6.8 kPa (1 psi) and 2950 kPa (428 psi)**

3. All OK.

Circuit/System Testing

1. Vehicle OFF and all vehicle systems OFF, disconnect the harness connector at the B1 A/C Refrigerant Pressure Sensor. It may take up to 2 min for all vehicle systems to power down.
2. Test for less than 10 Ω between the low reference circuit terminal 1 and ground.

⇒ **If 10 Ω or greater**

2.1. Vehicle OFF, disconnect the X1 harness connector at the K20 Engine Control Module.

2.2. Test for less than 2 Ω in the low reference circuit end to end.

⇒ If 2 Ω or greater, repair the open/high resistance in the circuit.

⇒ If less than 2 Ω, replace the K20 Engine Control Module.

⇓ **If less than 10 Ω**

3. Vehicle in Service Mode.
4. Test for 4.8–5.2 V between the 5 V reference circuit terminal 2 and ground.

⇒ **If less than 4.8 V**

4.1. Vehicle OFF, disconnect the harness connector at the K20 Engine Control Module.

4.2. Test for infinite resistance between the 5 V reference circuit and ground.

⇒ If less than infinite resistance, repair the short to ground on the circuit.

⇓ If infinite resistance

4.3. Test for less than 2 Ω in the 5 V reference circuit end to end.

⇒ If 2 Ω or greater, repair the open/high resistance in the circuit.

⇒ If less than 2 Ω, replace the K20 Engine Control Module.

⇒ **If greater than 5.2 V**

4.1. Vehicle OFF, disconnect the harness connector at the K20 Engine Control Module, vehicle in Service Mode.

4.2. Test for less than 1 V between the 5 V reference circuit and ground.

⇒ If 1 V or greater, repair the short to voltage on the circuit.

⇒ If less than 1 V, replace the K20 Engine Control Module.

⇓ **If between 4.8–5.2 V**

5. Verify the scan tool ECM A/C High Side Pressure Sensor parameter is less than .25 V.

⇒ **If .25 V or greater**

5.1. Vehicle OFF, disconnect the harness connector at the K20 Engine Control Module, vehicle in Service Mode.

5.2. Test for less than 1 V between the signal circuit terminal 3 and ground.

⇒ If 1 V or greater, repair the short to voltage on the circuit.

⇒ If less than 1 V, replace the K20 Engine Control Module.

⇓ **If less than .25 V**

6. Install a 3 A fused jumper wire between the signal circuit terminal 3 and the 5 V reference circuit terminal 2.
7. Verify the scan tool ECM A/C High Side Pressure Sensor parameter is greater than 4.8 V.

⇒ **If 4.8 V or less**

7.1. Vehicle OFF, remove the jumper wire and disconnect the harness connector at the K20 Engine Control Module.

7.2. Test for infinite resistance between the signal circuit terminal 3 and ground.

⇒ If less than infinite resistance, repair the short to ground on the circuit.

⇓ If infinite resistance

7.3. Test for less than 2 Ω in the signal circuit end to end.

⇒ If 2 Ω or greater, repair the open/high resistance in the circuit.

⇒ If less than 2 Ω, replace the K20 Engine Control Module.

⇓ **If greater than 4.8 V**

8. Test or replace the B1 A/C Refrigerant Pressure Sensor.

Repair Instructions

Perform the *Diagnostic Repair Verification on page 6-123* after completing the repair.

- *HVAC Component Replacement Reference on page 10-87*
- *Control Module References on page 6-3* for engine control module replacement, programming and setup

DTC P0534

Diagnostic Instructions

- Perform the *Diagnostic System Check - Vehicle on page 6-91* prior to using this diagnostic procedure.
- Review *Strategy Based Diagnosis on page 6-83* for an overview of the diagnostic approach.
- *Diagnostic Procedure Instructions on page 6-84* provides an overview of each diagnostic category.

DTC Descriptor

DTC P0534: Air Conditioning (A/C) Refrigerant Charge Low

Circuit/System Description

The AC compressor function is to provide refrigerant flow in the AC refrigerant loop to help cool down and dehumidify the cabin and help maintain the battery temperature. Rather than a more-typical pulley, the A/C compressor uses a 3-phase alternating current, high voltage electric motor to operate. It has an on-board inverter that takes High Voltage direct current from the vehicle's High Voltage Battery and inverts it to alternating current for the motor. The AC compressor shall be activated when any of the three following events occur:

- The customer selects ECO or Comfort.
- The HVAC system is fan only but the customer selects defrost mode
- The High Voltage Battery Thermal System requests the AC compressor on to help maintain the battery temperature

The Hybrid Powertrain control module 2 (HPCM2) uses values from the A/C refrigerant pressure transducers, ambient air temperature sensor, cabin climate control request, battery cell temperature sensors, battery coolant temperature sensors and battery coolant pumps to determine the speed at which the compressor will operate. This message is sent from the HPCM2 to the A/C compressor control module via serial data message.

Conditions for Running the DTC

DTC P0534 Case 1

- The 12V battery system voltage is equal to or greater than 10.25 V.
- The air conditioning compressor control module has 300 V.
- The A/C compressor motor is running for at least 30 s.
- Must be in battery active cooling mode for at least 1 min
- The following DTCs must not be set: P1F56, P0CE5, P1F58, P0CE2, P0CE3, P0CE6, P0CE7, P1CE7, P1CE8, P0C47, P0C4A, P1F18, P0C44, P0C45, P0C43, P0CD6, P0CD7, P0CD8, P0071, P0072, P0073.

DTC P0534 Case 2

- The 12V battery system voltage is equal to or greater than 10.25 V.
- The AC compressor is off for more than 240 s.
- Outside air temperature is greater than 15°C (59°F).
- The following DTCs must not be set: P2516, P2517, P2518, P0606, P0071, P0072, P0073.

DTC P0534 Case 3

- The 12V battery system voltage is equal to or greater than 10.25 V.
- The AC compressor is on for more than 240 s.
- Outside air temperature is greater than 5°C (41°F).
- The following DTCs must not be set: P2516, P2517, P2518, P0606, P0071, P0072, P0073.

Conditions for Setting the DTC

DTC P0534 Case 1

The difference between the hybrid/EV battery pack coolant outlet temperature and hybrid/EV battery pack coolant inlet temperature within the evaluation period of up to 300 seconds is less than a calibrated amount of 3°C to 5°C degrees. The required temperature difference requirement is based on outside air temperature and whether the cabin blower is on or off.

DTC P0534 Case 2

Low side pressure is less than 150 kPa (21.75 PSI) for outside air temperature greater than 20°C (68°F).

DTC P0534 Case 3

Low side pressure is less than 100 kPa (21.75 PSI) for outside air temperature greater than 5°C (41°F).

Action Taken When the DTC Sets

Active cooling mode for the battery may be disabled.

Conditions for Clearing the DTC

P0534 is a type B DTC.

Reference Information

Schematic Reference

HVAC Schematics on page 10-81

Connector End View Reference

Component Connector End Views on page 11-455

Description and Operation

Automatic HVAC Description and Operation on page 10-144

Electrical Information Reference

- *Circuit Testing on page 11-871*
- *Connector Repairs on page 11-895*
- *Testing for Intermittent Conditions and Poor Connections on page 11-877*
- *Wiring Repairs on page 11-883*

DTC Type Reference

Powertrain Diagnostic Trouble Code (DTC) Type Definitions on page 6-92

Scan Tool Reference

Control Module References on page 6-3 for scan tool information

Special Tools

J43600 ACR Air Conditioning Service Center

Diagnostic Aids

P1EC3 is the hybrid/EV battery pack heater circuit fault DTC. It diagnoses three different circuit faults (short-ground, short-battery, open circuit); one of these, short to ground, could cause the hybrid/EV battery pack heater to activate and could cause P0534 to set. Diagnose P1EC3 before diagnosing P0534.

The Circuit/System Testing procedure below diagnoses the vehicle for DTC P0534 in the following manner:

- Verify the A/C pressure sensors are working correctly and the refrigerant charge is correct.
- Verify the hybrid/EV battery pack coolant outlet temperature and hybrid/EV battery pack coolant inlet temperature sensors are working correctly and accurately.
- Verify the A/C system is operating correctly.
- Verify there are no restrictions in the battery cooling system.
- Verify the hybrid/EV battery pack coolant control valve is operating correctly.
- Verify the drive motor battery coolant cooler is working correctly.
- Verify the battery energy control module is working correctly.

A malfunction in any of the systems/components listed above may cause DTC P0534 to set.

Circuit/System Verification

1. Verify that DTC P1EC3, P0C47, P0C4A, P1E8C, P1E8D, or P1F18 is not set.

⇒ **If any of the DTC's are set**

Refer to *Diagnostic Trouble Code (DTC) List - Vehicle on page 6-92*.

⇓ **If the DTC's are not set**

2. Verify that DTC P0534 is not set.

⇒ **If the DTC is set**

Refer to Circuit/System Testing.

⇓ **If the DTC is not set**

3. All OK.

Circuit/System Testing

Note: The following conditions listed below must be met before performing this procedure.

- Vehicle must have had a cool down period of at least 2 hours in a cool area to allow A/C pressures and temperatures to equalize.
- Ensure the high voltage battery is charged to at least 50%.

1. Install the J43600 ACR Air Conditioning Service Center, vehicle in Service Mode.
2. Verify the low side pressure reading on the Air Conditioning Service Center is within 3% of the scan tool A/C Low Side Pressure Sensor parameter.

⇒ **If the reading is not within 3%**

Refer to*DTC P151C or P2516-P2518 on page 10-123*.

⇓ **If the reading is within 3%**

3. Verify the high side pressure reading on the Air Conditioning Service Center is within 3% of the scan tool A/C High Side Pressure Sensor parameter.

⇒ **If the reading is not within 3%**

Refer to*DTC P0532 or P0533 on page 10-112*.

⇓ **If the reading is within 3%**

4. Verify the scan tool Hybrid/EV Battery Pack Coolant Temperature Sensor 1 parameter is within 3% of ambient temperature.

⇒ **If the reading is not within 3%**

Refer to*DTC P0C43-P0C45 on page 9-212*.

⇓ **If the reading is within 3%**

5. Verify the scan tool Hybrid/EV Battery Pack Coolant Temperature Sensor 2 parameter is within 3% of ambient temperature.

⇒ **If the reading is not within 3%**

Refer to*DTC P0CD6-P0CD8 on page 9-219*.

⇓ **If the reading is within 3%**

6. Verify the A/C System is operating correctly, refer to*Air Conditioning (A/C) System Performance Test on page 10-5*.
7. Perform the *Hybrid/EV Battery Pack Coolant Control Valve Learn on page 9-343* procedure.
8. Verify DTC P0CE5, P0CE6, P0CE7, or P1F58 is not set.

⇒ **If DTC P0CE5, P0CE6, P0CE7, or P1F58 is set**

Refer to*DTC P0CE5-P0CE7 and P1F58 on page 9-225*.

⇓ **If DTC P0CE5, P0CE6, P0CE7, or P1F58 is not set**

9. Vehicle ON, A/C ON.
10. Perform the Hybrid/EV Battery Pack Active Cooling command function with a scan tool.

11. Verify the scan tool Coolant Control Valve parameter is 100%

⇒ **If the parameter is not 100%**

Refer to *DTC P0CE5-P0CE7 and P1F58 on page 9-225*

⇓ **If the parameter is 100%**

12. Verify the scan tool Hybrid/EV Battery Pack Coolant Pump Speed parameter is greater than 90%

⇒ **If the parameter is not 100%**

Refer to *Hybrid/EV Battery Pack Coolant Pump Malfunction on page 9-246*

⇓ **If the parameter is 100%**

Note: Hybrid/EV Battery Pack Coolant Temperature Sensor parameters and ambient air temperature must be above 18°C (64°F) before performing the next procedure.

13. Verify both the scan tool Hybrid/EV Battery Pack Coolant Temperature Sensor parameters drop at least 6°C (11°F) after 20 min.

⇒ **If the parameters do not drop at least 6°C (11°F)**

13.1. Pinch off or restrict the coolant valve to radiator hose and the coolant valve bypass hose.

13.2. Verify both the scan tool Hybrid/EV Battery Pack Coolant Temperature Sensor parameters drop at least 6°C (11°F) after 20 min.

⇒ If the parameters do not drop at least 6°C (11°F), replace the Drive Motor Battery Coolant Cooler.

⇒ If the parameters drop at least 6°C (11°F), replace the Q65 Hybrid/EV Battery Pack Coolant Control Valve.

⇓ **If the parameters drop at least 6°C (11°F)**

14. Clear all codes in the K114B Hybrid Powertrain Control Module 2 using a scan tool.

15. Verify DTC P0534 does not set while operating the HVAC system under the Conditions for Running the DTC.

⇒ **If the DTC is set**

Replace the K114B Hybrid Powertrain Control Module 2.

⇓ **If the DTC is not set**

16. All OK.

Repair Instructions

Perform the *Diagnostic Repair Verification on page 6-123* after completing the repair.

- *HVAC Component Replacement Reference on page 10-87*
- *Control Module References on page 6-3* for K114B Hybrid Powertrain Control Module 2 replacement, programming and setup

DTC P0D69-P0D7F

Diagnostic Instructions

- Perform the *Diagnostic System Check - Vehicle on page 6-91* prior to using this diagnostic procedure.
- Review *Strategy Based Diagnosis on page 6-83* for an overview of the diagnostic approach.
- *Diagnostic Procedure Instructions on page 6-84* provides an overview of each diagnostic category.

DTC Descriptors

DTC P0D69: A/C Compressor Motor Voltage Sensor Performance
DTC P0D6A: A/C Compressor Motor Voltage Sensor Circuit High Voltage
DTC P0D6B: A/C Compressor Motor Voltage Sensor Circuit Low Voltage
DTC P0D6F: A/C Compressor Motor High Current
DTC P0D71: Electric A/C Compressor Control Module Temperature Sensor Performance
DTC P0D72: Electric A/C Compressor Control Module Temperature Sensor Circuit High Voltage
DTC P0D73: Electric A/C Compressor Control Module Temperature Sensor Circuit Low Voltage
DTC P0D74: Electric A/C Compressor Control Module Internal Temperature Sensor Circuit Intermittent/Erratic
DTC P0D76: Electric A/C Compressor Control Module Output Driver Temperature Sensor Performance
DTC P0D77: Electric A/C Compressor Control Module Output Driver Temperature Sensor Circuit High Voltage
DTC P0D78: Electric A/C Compressor Control Module Output Driver Temperature Sensor Circuit Low Voltage
DTC P0D79: Electric A/C Compressor Control Module Output Driver Temperature Sensor Circuit Intermittent/Erratic
DTC P0D7A: A/C Compressor Motor Phase U Low Current
DTC P0D7B: A/C Compressor Motor Phase U High Current
DTC P0D7C: A/C Compressor Motor Phase V Low Current
DTC P0D7D: A/C Compressor Motor Phase V High Current
DTC P0D7E: A/C Compressor Motor Phase W Low Current
DTC P0D7F: A/C Compressor Motor Phase W High Current

Circuit/System Description

The AC compressor function is to provide refrigerant flow in the AC refrigerant loop to help cool down the cabin, help dehumidify the air in a defrost mode and help maintain the battery temperature. Rather than a more-typical pulley, the A/C compressor uses a 3-phase alternating current, high voltage electric motor to operate. It has an on-board inverter that takes High Voltage direct current from the vehicle's High Voltage Battery and inverts it to alternating current for the motor. The AC compressor shall be activated when any of the three following events occur:

- The customer pushes the AC button
- The HVAC control, in AUTO mode, requests the electric AC compressor on to help in cooling the cabin or removing moisture in the defrost mode
- The High Voltage Battery Thermal System requests the AC compressor on to help maintain the battery temperature

The Hybrid Powertrain control module 2 uses values from the A/C refrigerant pressure transducers, A/C refrigerant thermistor, duct temperature sensors, ambient air temperature sensor , passenger compartment temperature sensor, evaporator temperature sensor, battery cell temperature sensors, battery coolant temperature sensors and battery coolant pumps to determine the speed at which the compressor will operate. This speed request message is sent from the Hybrid/EV Powertrain Control Module 2 to the A/C compressor control module via serial data message.

Conditions for Running the DTC

Certain performance DTCs in this group, P0D69, P0D71, P076, are intended to run after a long ambient soak period, such as being parked overnight, when a hot engine condition has cooled, etc.

DTC P0D69

- 12 V battery system voltage is above 10.25 V.
- A/C compressor control module is awake.
- Main HV battery contactors must be closed.
- DTCs P0D6A; P0D6B, P0ABC, P0ABD, P0ABB, P0AF8, P1A07, U1111, U185A, P0AE4, P0AD9, P0AA1, P0ADD, P1EBC, P0AE2 must not be set.

DTC P0D6A

- 12 V battery system voltage is above 10.25 V.
- A/C compressor control module is awake.
- Difference between the A/C compressor control module high voltage levels and the high voltage Battery Pack Side Voltage is less than 15 V.
- There are no battery pack voltage DTC's set.
- Battery Pack Voltage Sensors are valid.

DTC P0D6B

- 12 V battery system voltage is above 10.25 V.
- A/C compressor control module is awake.
- Difference between the A/C compressor control module high voltage levels and the high voltage Battery Pack Side Voltage exceeds 15 V.
- Battery Pack Voltage Sensors are valid.
- There are no battery pack voltage DTC's set.
- Main HV Contactors are Closed
- No main HV contactor faults are active

DTC P0D6F

- 12 V battery system voltage is above 10.25 V.
- A/C compressor control module is awake.
- Compressor Speed Request is greater than 0 RPM

DTC P0D71

- 12 V battery system voltage is above 10.25 V.
- Vehicle is in Run Mode or Charging Mode
- Compressor has been off for > 6 hours
- Outside air temperature is greater than -7°C
- Engine coolant temperature is within 15° of outside air temperature
- DTCs P0D77, P0D78, P0606 P0073; P0072; P0071, P0113, P0112, P0111, P0114, P0119; P0118; P0117; P0116, P0D72; P0D73 must not be set

DTC P0D72

- 12 V battery system voltage is above 10.25 V.
- A/C compressor control module is awake.
- Outside Air temperature is greater than -7°C (19°F)
- Following DTCs are not set: CPU temp sensor, output driver temp sensor, outside air temperature sensor, engine coolant temperature sensor.

DTC P0D73

- 12 V battery system voltage is above 10.25 V.
- A/C compressor control module is awake.

DTC P0D76

- 12 V battery system voltage is above 10.25 V.
- A/C compressor control module is awake.
- Outside Air temperature is greater than -7°C (19°F)
- Engine coolant temperature is within 15° of outside air temperature
- Compressor has been off for greater than 6 hours
- Following DTCs are not set: P0D77; P0D78, P0606, P0073; P0072; P0071, P0073; P0072; P0071, P0113, P0112, P0111, P0114, P0119; P0118; P0117; P0116

DTC P0D77

- 12 V battery system voltage is above 10.25 V.
- A/C compressor control module is awake.
- Outside Air temperature is greater than -7°C (19°F)
- Compressor Speed Request is greater than 0 RPM

DTC P0D78

- 12 V battery system voltage is above 10.25 V.
- A/C compressor control module is awake.

DTC P0D7A

- 12 V battery system voltage is above 10.25 V.
- A/C compressor control module is awake.
- Compressor Speed Request is 0 RPM

DTC P0D7B

- 12 V battery system voltage is above 10.25 V.
- A/C compressor control module is awake.
- Compressor Speed Request is 0 RPM

DTC P0D7C

- 12 V battery system voltage is above 10.25 V.
- A/C compressor control module is awake.
- Compressor Speed Request is 0 RPM

DTC P0D7D

- 12 V battery system voltage is above 10.25 V.
- A/C compressor control module is awake.
- Compressor Speed Request is 0 RPM

DTC P0D7E

- 12 V battery system voltage is above 10.25 V.
- A/C compressor control module is awake.
- Compressor Speed Request is 0 RPM

DTC P0D7F

- 12 V battery system voltage is above 10.25 V.
- A/C compressor control module is awake.
- Compressor Speed Request is 0 RPM

Conditions for Setting the DTC

DTC P0D69

A/C compressor control module high voltage input voltage is not within 10 V of high voltage battery voltage

DTC P0D6A

A/C compressor control module input voltage is greater than 450 V for 6 seconds

DTC P0D6B

A/C compressor control module input voltage is less than 190 V for 6 seconds

DTC P0D6F

A/C compressor control module DC current draw is greater than 27 A for more than 6 seconds.

DTC P0D71

Compressor temperature sensor is not within 10 of intake air temperature sensor and compressor temperature sensor is not within 10° of compressor output driver temperature sensor.

DTC P0D72

less than -40°C (-40°F) for 6 seconds.

DTC P0D73

greater than 135°C (276.6°F) for 6 seconds.

DTC P0D76

Compressor output driver temperature sensor is not within 7° of intake air temperature sensor and compressor output d river temperature sensor is not within 11° of outside air temperature.

DTC P0D77

Air conditioning compressor module output driver temperature sensor is less than -40°C (-40°F)

DTC P0D78

Air conditioning compressor module output driver temperature sensor is greater than 135°C (276.6°F)

DTC P0D7A

Air conditioning compressor motor current U-phase Input greater than or equal to 68 A

DTC P0D7B

Air conditioning compressor motor current U-phase Input less than or equal to -68 A

DTC P0D7C

Air conditioning compressor motor current V-phase Input greater than or equal to 68 A

DTC P0D7D

Air conditioning compressor motor current V-phase Input less than or equal to -68 A

DTC P0D7E

Air conditioning compressor motor current W-phase Input greater than or equal to 68 A

DTC P0D7F

Air conditioning compressor motor current W-phase Input less than or equal to -68 A

Action Taken When the DTC Sets

The A/C compressor control module is disabled.

Conditions for Clearing the DTC

These are all type B DTC's

Reference Information

Schematic Reference

HVAC Schematics on page 10-81

Connector End View Reference

Component Connector End Views on page 11-455

Description and Operation

Automatic HVAC Description and Operation on page 10-144

Electrical Information Reference

- *Circuit Testing on page 11-871*
- *Connector Repairs on page 11-895*
- *Testing for Intermittent Conditions and Poor Connections on page 11-877*
- *Wiring Repairs on page 11-883*

DTC Type Reference

Powertrain Diagnostic Trouble Code (DTC) Type Definitions on page 6-92

Scan Tool Reference

Control Module References on page 6-3 for scan tool information

Special Tools

- *EL-48900* HEV Safety Kit
- *EL-50772* Insulation Multimeter

For equivalent regional tools, refer to *Special Tools on page 9-549*.

Circuit/System Verification

Danger: Always perform the High Voltage Disabling procedure prior to servicing any High Voltage component or connection. Personal Protection Equipment (PPE) and proper procedures must be followed.

The High Voltage Disabling procedure includes the following steps:

- ***Identify how to disable high voltage.***
- ***Identify how to test for the presence of high voltage.***
- ***Identify condition under which high voltage is always present and personal protection equipment (PPE) and proper procedures must be followed.***

Before working on any high voltage system, be sure to wear the following Personal Protection Equipment:

- ***Safety glasses with appropriate side shields when within 15 meters (50 feet) of the vehicle, either indoors or outdoors.***
- ***Certified and up-to-date Class "0" Insulation gloves rated at 1000V with leather protectors.***
  - ***Visually and functionally inspect the gloves before use.***
  - ***Wear the Insulation gloves with leather protectors at all times when working with the high voltage battery assembly, whether the system is energized or not.***

Failure to follow the procedures may result in serious injury or death.

1. Vehicle in Service Mode.
2. Verify that DTC P0D69-P0D7F is not set.

⇒ **If any of the DTC's are set**

2.1. Program the G1 A/C Compressor and the K114B Hybrid/EV Powertrain Control Module 2 with the latest software calibration.

2.2. Verify the DTC's do not set.

⇒ If any of the DTC's set, refer to Circuit/System Testing.

⇓ If none of the DTC's are set

2.3. All OK.

⇓ **If none of the DTC's are set**

3. All OK.

Circuit/System Testing

Danger: Always perform the High Voltage Disabling procedure prior to servicing any High Voltage component or connection. Personal Protection Equipment (PPE) and proper procedures must be followed.

The High Voltage Disabling procedure includes the following steps:

- ***Identify how to disable high voltage.***
- ***Identify how to test for the presence of high voltage.***
- ***Identify condition under which high voltage is always present and personal protection equipment (PPE) and proper procedures must be followed.***

Before working on any high voltage system, be sure to wear the following Personal Protection Equipment:

- ***Safety glasses with appropriate side shields when within 15 meters (50 feet) of the vehicle, either indoors or outdoors.***
- ***Certified and up-to-date Class "0" Insulation gloves rated at 1000V with leather protectors.***
  - ***Visually and functionally inspect the gloves before use.***
  - ***Wear the Insulation gloves with leather protectors at all times when working with the high voltage battery assembly, whether the system is energized or not.***

Failure to follow the procedures may result in serious injury or death.

1. Vehicle OFF, disable the high voltage at the T24 Battery Charger — DC. Refer to *High Voltage Disabling on page 9-363*.
2. Disconnect the X2 harness connector at the G1 A/C Compressor and disconnect the X5 harness connector at the T24 Battery Charger — DC.

   Note: The following tests must be performed using an Insulation Multimeter. Select the Isolation test setting, then select the 500 V range.

3. Test for greater than 400k Ω with the *EL-50772* Insulation Multimeter set on the Isolation test setting between the terminals listed below and ground:
   - G1 A/C Compressor high voltage DC (-360 V) circuit terminal B X2.
   - G1 A/C Compressor high voltage DC (+360 V) circuit terminal A X2.

⇒ **If less than 400k Ω**

Replace the cable assembly.

⇓ **If 400k Ω or greater**

4. Test for greater than 400k Ω with the *EL-50772* Insulation Multimeter set on the Isolation test setting between the G1 A/C Compressor high voltage DC (+360 V) terminal A X2 and the G1 A/C Compressor high voltage DC (-360 V) circuit terminal B X2.

⇒ **If less than 400k Ω**

Replace the cable assembly.

⇓ **If 400k Ω or greater**

5. Verify the high voltage DC-360 V circuit fuse is not open.

⇒ **If the high voltage DC-360 V circuit fuse is open**

Replace the G1 A/C Compressor.

⇓ **If the high voltage DC-360 V circuit fuse is not open**

6. Test for less than 10 Ω between the following terminals listed below:
   - G1 A/C Compressor high voltage DC (+360 V) circuit terminal A X2 and the T24 Battery Charger — DC high voltage DC (+360 V) circuit terminal A X5.
   - G1 A/C Compressor high voltage DC (–360 V) circuit terminal B X2 and the T24 Battery Charger — DC high voltage DC (–360 V) circuit terminal B X5.

⇒ **If 10 Ω or greater**

Replace the cable assembly.

⇓ **If less than 10 Ω**

7. Replace the G1 A/C Compressor.
8. Verify that the DTC does not set while operating the vehicle system under the Conditions for Running the DTC.

⇒ **If the DTC is set**

Replace the T24 Battery Charger — DC.

⇓ **If the DTC does not set**

9. All OK.

Repair Instructions

Perform the *Diagnostic Repair Verification on page 6-123* after completing the repair.

- *HVAC Component Replacement Reference on page 10-87*
- *Control Module References on page 6-3* for control module replacement, programming and setup

DTC P0AF8

Diagnostic Instructions

- Perform the *Diagnostic System Check - Vehicle on page 6-91* prior to using this diagnostic procedure.
- Review *Strategy Based Diagnosis on page 6-83* for an overview of the diagnostic approach.
- *Diagnostic Procedure Instructions on page 6-84* provides an overview of each diagnostic category.

DTC Descriptor

DTC P0AF8 03: Hybrid System Voltage

Circuit/System Description

The coolant heater control module will determine when a fault condition is present. Diagnostics and system status are communicated from the coolant heater control module to hybrid powertrain control module 2 through serial data.

Conditions for Running the DTC

Propulsion system is active.

Conditions for Setting the DTC

The coolant heater control module has detected less than 100 V on the high voltage bus for more than 5 seconds.

Action Taken When the DTC Sets

- DTC P0AF8 is a type A DTC.
- No cabin heat after 15 seconds.

Conditions for Clearing the DTC

DTC P0AF8 is a type A DTC.

Diagnostic Aids

Do not replace the coolant heater control module based only on DTC P0AF8 being set in history. P0AF8 may be set by disconnecting the high voltage cables to the coolant heater control module and the vehicle is turned ON.

Reference Information

Schematic Reference

HVAC Schematics on page 10-81

Connector End View Reference

Component Connector End Views on page 11-455

Description and Operation

Automatic HVAC Description and Operation on page 10-144

Electrical Information Reference

- *Circuit Testing on page 11-871*
- *Connector Repairs on page 11-895*
- *Testing for Intermittent Conditions and Poor Connections on page 11-877*
- *Wiring Repairs on page 11-883*

DTC Type Reference

Powertrain Diagnostic Trouble Code (DTC) Type Definitions on page 6-92

Scan Tool Reference

Control Module References on page 6-3 for scan tool information

Special Tools

EL-48900 HEV Safety Kit

For equivalent regional tools, refer to *Special Tools on page 9-344*.

Circuit/System Verification

Note: If DTC P0AF8 is history do not replace the coolant heater control module.

1. Verify that DTC P0AF8 is not current and no other DTCs are set.

⇒ **If other DTCs are set**

Refer to *Diagnostic Trouble Code (DTC) List - Vehicle on page 6-92*.

⇒ **If DTC P0AF8 is current and no other DTCs are set**

Refer to Circuit/System Testing.

⇓ **If DTC P0AF8 is not current and no other DTCs are set**

2. All OK.

Circuit/System Testing

Danger: Always perform the High Voltage Disabling procedure prior to servicing any High Voltage component or connection. Personal Protection Equipment (PPE) and proper procedures must be followed.

The High Voltage Disabling procedure includes the following steps:

- ***Identify how to disable high voltage.***
- ***Identify how to test for the presence of high voltage.***
- ***Identify condition under which high voltage is always present and personal protection equipment (PPE) and proper procedures must be followed.***

Before working on any high voltage system, be sure to wear the following Personal Protection Equipment:

- ***Safety glasses with appropriate side shields when within 15 meters (50 feet) of the vehicle, either indoors or outdoors.***
- ***Certified and up-to-date Class "0" Insulation gloves rated at 1000V with leather protectors.***
  - ***Visually and functionally inspect the gloves before use.***
  - ***Wear the Insulation gloves with leather protectors at all times when working with the high voltage battery assembly, whether the system is energized or not.***

Failure to follow the procedures may result in serious injury or death.

1. Vehicle OFF, disable the high voltage at the K10 Coolant Heater Control Module. Refer to *High Voltage Disabling on page 9-363*.
2. Disconnect the X4 harness connector at the T24 Battery Charger — DC and disconnect the X2 harness connector at the K10 Coolant Heater Control Module.
3. Test for infinite resistance between the terminals listed below and ground:
   - K10 Coolant Heater Control Module high voltage DC (-360 V) circuit terminal B X2.
   - K10 Coolant Heater Control Module high voltage DC (+360 V) circuit terminal A X2.

⇒ **If less than infinite resistance**

Replace the cable assembly.

⇓ **If infinite resistance**

4. Test for infinite resistance between the K10 Coolant Heater Control Module high voltage DC (+360 V) terminal A X2 and the K10 Coolant Heater Control Module high voltage DC (-360 V) circuit terminal B X2.

⇒ **If less than infinite resistance**

Replace the cable assembly.

⇓ **If less than infinite resistance**

5. Verify the high voltage DC-360 V circuit fuse is not open.

⇒ **If the high voltage DC-360 V circuit fuse is open**

Replace the K10 Coolant Heater Control Module.

⇓ **If the high voltage DC-360 V circuit fuse is not open**

6. Test for less than 10 Ω between the following terminals listed below:
   - K10 Coolant Heater Control Module high voltage DC (+360 V) circuit terminal A X2 and the T24 Battery Charger — DC high voltage DC (+360 V) circuit terminal A X4.
   - K10 Coolant Heater Control Module high voltage DC (–360 V) circuit terminal B X2 and the T24 Battery Charger — DC high voltage DC (–360 V) circuit terminal B X4.

⇒ **If 10 Ω or greater**

Replace the cable assembly.

⇓ **If less than 10 Ω**

7. Replace the T24 Battery Charger — DC.
8. Verify that DTC P0AF8 does not set while operating the vehicle system under the Conditions for Running the DTC.

⇒ **If DTC P0AF8 is set**

Replace the K10 Coolant Heater Control Module.

⇓ **If DTC P0AF8 does not set**

9. All OK.

Repair Instructions

Perform the *Diagnostic Repair Verification on page 6-123* after completing the repair.

- *300-Volt Battery Positive and Negative Cable Replacement (Drive Motor Generator Power Inverter Module to Drive Motor Battery) on page 9-454* or *300-Volt Battery Positive and Negative Cable Replacement (Drive Motor Generator Power Inverter Module to High Voltage Battery Disconnect Module) on page 9-457*
- *Control Module References on page 6-3* for coolant heater control module replacement, programming and setup

DTC P151C or P2516-P2518

Diagnostic Instructions

- Perform the *Diagnostic System Check - Vehicle on page 6-91* prior to using this diagnostic procedure.
- Review *Strategy Based Diagnosis on page 6-83* for an overview of the diagnostic approach.
- *Diagnostic Procedure Instructions on page 6-84* provides an overview of each diagnostic category.

DTC Descriptors

DTC P151C: Air Conditioning (A/C) Refrigerant Low Side Pressure Sensor Not Plausible
DTC P2516: Air Conditioning (A/C) Refrigerant Low Side Pressure Sensor Performance
DTC P2517: Air Conditioning (A/C) Refrigerant Low Side Pressure Sensor Circuit Low Voltage
DTC P2518: Air Conditioning (A/C) Refrigerant Low Side Pressure Sensor Circuit High Voltage

Diagnostic Fault Information

Circuit	Short to Ground	Open/High Resistance	Short to Voltage	Signal Performance
5 V Reference	P0CE5 00, P0CE6 00, P0606 00, P2517 00, P26A6 00, P2681 00	P2516 00 P2517 00	P0CE7 00, P0606 00, P2518 00, P26A7 00	—
A/C Low Pressure Sensor Signal	P2516 00 P2517 00	P2517 00	P0CE5 00, P0CE7 00, P0606 00, P2518 00, P26A5 00, P26A9 00	P2516 00
Low Reference	—	P2517 00	—	—

Circuit/System Description

The Hybrid/EV Powertrain Control Module 2 monitors the low side refrigerant pressure through the A/C pressure sensor. The Hybrid/EV Powertrain Control Module 2 supplies a 5 V reference and a low reference to the sensor. Changes in the A/C refrigerant pressure cause the sensor signal to the Hybrid/EV Powertrain Control Module 2 to vary. When the pressure is high, the signal voltage is high. When the pressure is low, the signal voltage is low.

Conditions for Running the DTC

P151C

- Vehicle ON.
- 12 V battery system voltage above 10.25 V.
- Hybrid/EV powertrain control module 2 is awake and communicating.
- None of these DTCs may be active: P2517, P2518, P0073; P0072; P0071, P0119; P0118; P0117; P0116, P0531, P0532; P0533, P0606.
- Outside Air Temperature raw and corrected values must have had a chance to settle out. Once this occurs these variables are assigned a status of valid. May need to have some time driving in EV mode.
- Engine coolant temperature must be within 15 degrees of outside air temperature.
- Outside air temperature between 0°C (32°F) and 25°C (77°F).
- A/C compressor must have been off for an hour since the last time the A/C compressor was on.
- High side refrigerant pressure reading must be between 0 kPa and 675 kPa.

P2516

- Vehicle ON.
- 12 V battery system voltage above 10.25 V.
- Hybrid/EV powertrain control module 2 is awake and communicating.
- None of these DTCs may be active: P2517, P2518, P0073; P0072; P0071, P0119; P0118; P0117; P0116, P0606.
- Engine coolant temperature must be within 15 degrees of outside air temperature.
- A/C compressor must have been off for an hour since the last time the A/C compressor was on.
- A/C compressor must be turned on for one minute. (This may require the service technician to select an HVAC mode that causes the A/C compressor to run).

P2517 or P2518

- Vehicle ON.
- 12 V battery system voltage above 10.25 V.
- Hybrid/EV powertrain control module 2 is awake and communicating.

Conditions for Setting the DTC

DTC P151C

- The A/C low side refrigerant pressure reading and the A/C high side refrigerant pressure reading differ by more than 200 kPa (29 psi) after a soak period.
- Loss of HVAC control module communication

DTC P2516

The difference between the A/C low side pressure sensor before compressor on and after compressor on changes less than 50 kPa (7 psi) over a 15 second period.

DTC P2517

The Hybrid/EV powertrain control module 2 detects a short to ground or open at the A/C low side pressure sensor signal circuit.

DTC P2518

The Hybrid/EV powertrain control module 2 detects a short to voltage at the A/C low side pressure sensor signal circuit.

Action Taken When the DTC Sets

These are type B DTCs.

Conditions for Clearing the DTC

These are type B DTCs.

Reference Information

Schematic Reference

HVAC Schematics on page 10-81

Connector End View Reference

Component Connector End Views on page 11-455

Description and Operation

Automatic HVAC Description and Operation on page 10-144

Electrical Information Reference

- *Circuit Testing on page 11-871*
- *Connector Repairs on page 11-895*
- *Testing for Intermittent Conditions and Poor Connections on page 11-877*
- *Wiring Repairs on page 11-883*

DTC Type Reference

Powertrain Diagnostic Trouble Code (DTC) Type Definitions on page 6-92

Scan Tool Reference

Control Module References on page 6-3 for scan tool information

Special Tools

GE-50300 ACR Air Conditioning Service Center

Circuit/System Verification

1. Vehicle in Service Mode.
2. Verify that DTCs U0140 and U184B are not set.

⇒ **If DTCs U0140 or U184B are set**

Refer to *DTC U0100-U02FF on page 11-81* or *DTC U184B on page 11-137*.

⇓ **If DTCs U0140 or U184B are not set**

3. Verify that DTCs P151C or P2516-P2518 are set.

⇒ **If DTCs P151C or P2516-P2518 are not set**

All OK.

⇓ **If DTCs P151C or P2516-P2518 are set**

4. Install the *GE-50300* ACR Air Conditioning Service Center.
5. Verify the low side pressure reading on the Air Conditioning Service Center is within 10% of the scan tool Hybrid/EV Powertrain Control Module 2 A/C Low Side Pressure Sensor parameter.

⇒ **If the reading is not within 10%**

Refer to Circuit/System Testing.

⇓ **If the reading is within 10%**

6. Refer to *HVAC System Malfunction on page 10-130*.

Circuit/System Testing

1. Vehicle OFF and all vehicle systems OFF, disconnect the harness connector at the B1C A/C Low Side Pressure Sensor. It may take up to 10 min for all vehicle systems to power down.
2. Test for less than 10 Ω between the low reference circuit terminal 1 and ground.

⇒ **If 10 Ω or greater**

2.1. Vehicle OFF, disconnect the X1 harness connector at the K114B Hybrid/EV Powertrain Control Module 2.

2.2. Test for less than 2 Ω in the low reference circuit end to end.

⇒ If 2 Ω or greater, repair the open/high resistance in the circuit.

⇒ If less than 2 Ω, replace the K114B Hybrid/EV Powertrain Control Module 2.

⇓ **If less than 10 Ω**

3. Vehicle in Service Mode.

4. Test for 4.8–5.2 V between the 5 V reference circuit terminal 2 and ground.

⇒ **If less than 4.8 V**

4.1. Vehicle OFF, disconnect the X1 harness connector at the K114B Hybrid/EV Powertrain Control Module 2.

4.2. Test for infinite resistance between the 5 V reference circuit and ground.

⇒ If less than infinite resistance, repair the short to ground on the circuit.

⇓ If infinite resistance

4.3. Test for less than 2 Ω in the 5 V reference circuit end to end.

⇒ If 2 Ω or greater, repair the open/high resistance in the circuit.

⇒ If less than 2 Ω, replace the K114B Hybrid/EV Powertrain Control Module 2.

⇒ **If greater than 5.2 V**

4.1. Vehicle OFF, disconnect the X1 harness connector at the K114B Hybrid/EV Powertrain Control Module 2, vehicle in Service Mode.

4.2. Test for less than 1 V between the 5 V reference circuit and ground.

⇒ If 1 V or greater, repair the short to voltage on the circuit.

⇒ If less than 1 V, replace the K114B Hybrid/EV Powertrain Control Module 2.

⇓ **If between 4.8–5.2 V**

5. Verify the scan tool Hybrid/EV Powertrain Control Module 2 A/C Low Side Pressure Sensor parameter is less than 0.1 V.

⇒ **If 0.1 V or greater**

5.1. Vehicle OFF, disconnect the X1 harness connector at the K114B Hybrid/EV Powertrain Control Module 2, vehicle in Service Mode.

5.2. Test for less than 1 V between the signal circuit terminal 3 and ground.

⇒ If 1 V or greater, repair the short to voltage on the circuit.

⇒ If less than 1 V, replace the K114B Hybrid/EV Powertrain Control Module 2.

⇓ **If less than 0.1 V**

6. Install a 3 A fused jumper wire between the signal circuit terminal 3 and the 5 V reference circuit terminal 2.

7. Verify the scan tool A/C Low Side Pressure Sensor parameter is greater than 4.8 V.

⇒ **If 4.8 V or less**

7.1. Vehicle OFF, remove the jumper wire and disconnect the X1 harness connector at the K114B Hybrid/EV Powertrain Control Module 2.

7.2. Test for infinite resistance between the signal circuit terminal 3 and ground.

⇒ If less than infinite resistance, repair the short to ground on the circuit.

⇓ If infinite resistance

7.3. Test for less than 2 Ω in the signal circuit end to end.

⇒ If 2 Ω or greater, repair the open/high resistance in the circuit.

⇒ If less than 2 Ω, replace the K114B Hybrid/EV Powertrain Control Module 2.

⇓ **If greater than 4.8 V**

8. Test or replace the B1C A/C Low Side Pressure Sensor.

Repair Instructions

Perform the *Diagnostic Repair Verification on page 6-123* after completing the repair.

- *HVAC Component Replacement Reference on page 10-87*
- *Control Module References on page 6-3* for Hybrid/EV powertrain control module 2 replacement, programming and setup

DTC P1ECA or P1EC9

Diagnostic Instructions

- Perform the *Diagnostic System Check - Vehicle on page 6-91* prior to using this diagnostic procedure.
- Review *Strategy Based Diagnosis on page 6-83* for an overview of the diagnostic approach.
- *Diagnostic Procedure Instructions on page 6-84* provides an overview of each diagnostic category.

DTC Descriptors

DTC P1ECA: A/C Compressor Motor Instantaneous High Voltage
DTC P1EC9: A/C Compressor Motor Instantaneous High Current

Circuit/System Description

The A/C compressor function is to provide refrigerant flow in the A/C refrigerant loop to help cool down the cabin, help dehumidify the air in a defrost mode and help maintain the battery temperature. Rather than a more-typical pulley, the A/C compressor uses a 3-phase alternating current, high voltage electric motor to operate. It has an on-board inverter that takes High Voltage direct current from the vehicle's High Voltage Battery and inverts it to alternating current for the motor. The A/C compressor shall be activated when any of the three following events occur:

- The customer pushes the AC button
- The HVAC control, in AUTO mode, requests the electric A/C compressor on to help in cooling the cabin or removing moisture in the defrost mode
- The High Voltage Battery Thermal System requests the A/C compressor on to help maintain the battery temperature

The Hybrid/EV powertrain control module 2 uses values from the A/C refrigerant pressure transducers, A/C refrigerant thermistor, duct temperature sensors, ambient air temperature sensor , passenger compartment temperature sensor, evaporator temperature sensor, battery cell temperature sensors, battery coolant temperature sensors and battery coolant pumps to determine the speed at which the compressor will operate. This speed request message is sent from the Hybrid/EV powertrain control module 2 to the A/C compressor control module via GM LAN message.

Conditions for Running the DTC

DTC P1ECA

- System voltage is above 10.25 V.
- Vehicle is in Run Mode or Charging Mode.

DTC P1EC9

- System voltage is above 10.25 V.
- Vehicle is in Run Mode or Charging Mode.
- Compressor Speed Request is greater than 0 RPM.

Conditions for Setting the DTC

DTC P1ECA

Sets when the high voltage to the module is greater than 480 V for 3 s

DTC P1EC9

Sets when DC Link is above threshold of 60 A for 3 s

Action Taken When the DTC Sets

The A/C compressor control module is disabled but will retry once the compressor speed request goes to 0 RPM and a new speed request greater than 0 RPM is sent .

Conditions for Clearing the DTC

The DTC can be cleared with the scan tool.

Reference Information

Schematic Reference

HVAC Schematics on page 10-81

Connector End View Reference

Component Connector End Views on page 11-455

Description and Operation

Automatic HVAC Description and Operation on page 10-144

Electrical Information Reference

- *Circuit Testing on page 11-871*
- *Connector Repairs on page 11-895*
- *Testing for Intermittent Conditions and Poor Connections on page 11-877*
- *Wiring Repairs on page 11-883*

DTC Type Reference

Powertrain Diagnostic Trouble Code (DTC) Type Definitions on page 6-92

Scan Tool Reference

Control Module References on page 6-3 for scan tool information

Circuit/System Verification

1. Verify DTC P1ECA or P1EC9 is not set.

⇒ **If either DTC is set**

1.1. Program the G1 A/C Compressor and the K114B Hybrid/EV Powertrain Control Module 2 with the latest software calibration.

1.2. Verify DTC P1ECA or P1EC9 is not set.

⇒ If either DTC is set, replace the G1 A/C Compressor.

⇓ If the DTCs are not set

1.3. All OK.

⇓ **If the DTCs are not set**

2. All OK.

Repair Instructions

Perform the *Diagnostic Repair Verification on page 6-123* after completing the repair.

- *HVAC Component Replacement Reference on page 10-87*
- *Control Module References on page 6-3* for Hybrid/EV powertrain control module 2 replacement, programming and setup

DTC P1F0A-P1F0D

Diagnostic Instructions

- Perform the *Diagnostic System Check - Vehicle on page 6-91* prior to using this diagnostic procedure.
- Review *Strategy Based Diagnosis on page 6-83* for an overview of the diagnostic approach.
- *Diagnostic Procedure Instructions on page 6-84* provides an overview of each diagnostic category.

DTC Descriptors

DTC P1F0A: A/C Compressor Motor Speed Performance

DTC P1F0B: A/C Compressor Motor Start-Up Current Performance

DTC P1F0C: Electric A/C Compressor Control Module A/C Compressor Motor Current Feedback Circuit Low Voltage

DTC P10FD: Electric A/C Compressor Control Module A/C Compressor Motor Current Feedback Circuit High Voltage

Circuit/System Description

The A/C compressor function is to provide refrigerant flow in the A/C refrigerant loop to help cool down the cabin, help dehumidify the air in a defrost mode and help maintain the battery temperature. Rather than a more-typical pulley, the A/C compressor uses a 3-phase alternating current, high voltage electric motor to operate. It has an on-board inverter that takes High Voltage direct current from the vehicle's High voltage battery and inverts it to alternating current for the motor. The A/C compressor shall be activated when any of the three following events occur:

- The customer pushes the AC button
- The HVAC control, in AUTO mode, requests the electric A/C compressor on to help in cooling the cabin or removing moisture in the defrost mode
- The High Voltage Battery Thermal System requests the A/C compressor on to help maintain the battery temperature

The Hybrid/EV powertrain control module 2 uses values from the A/C refrigerant pressure transducers, A/C refrigerant thermistor, duct temperature sensors, ambient air temperature sensor , passenger compartment temperature sensor, evaporator temperature sensor, battery cell temperature sensors, battery coolant temperature sensors and battery coolant pumps to determine the speed at which the compressor will operate. This message is sent from the Hybrid/EV powertrain control module 2 to the A/C compressor control module via serial data message.

A/C Compressor has a motor start up procedure that can take a variable length of time to run to bring the motor up to requested speed. Length of time is dependent on external conditions such as underhood temperature and high side pressure. In hotter conditions, the motor start up time will be longer. The A/C compressor control module monitors an internal parameter known as the DC link current which is based off DC input current. It is not possible to measure this parameter externally.

Conditions for Running the DTC

DTC P1F0A

- 12 V battery system voltage is above 10.25 V.
- Vehicle is in Run Mode or Charging Mode
- Compressor is in start up mode

DTC P1F0B

- 12 V battery system voltage is above 10.25 V.
- Vehicle is in Run Mode or Charging Mode
- Compressor is in start up mode

DTC P1F0C

- 12 V battery system voltage is above 10.25 V.
- Vehicle is in Run Mode or Charging Mode
- Compressor is in start up mode

DTC P1F0D

- 12 V battery system voltage is above 10.25 V.
- Vehicle is in Run Mode or Charging Mode
- Compressor is in start up mode

Conditions for Setting the DTC

DTC P1F0A

- A/C compressor control module temperature is greater than 85°C (185°F) and compressor motor speed does not reach to 1800 RPM within 20 s after the start of spinning
- A/C compressor control module temperature is less than or equal to 85°C and A/C compressor motor speed does not reach to 1800 RPM.

DTC P1F0B

Any A/C compressor control module phase current (U/V/W) greater than or equal to -1 A during initial motor startup process

DTC P1F0C

A/C compressor control module DC link Current is less than 2.5 A for 6 s

DTC P1F0D

A/C compressor control module DC link Current is greater than 36.7 A for 6 s

Action Taken When the DTC Sets

The A/C compressor control module is disabled but will retry once the compressor speed request goes to 0 RPM and a new speed request greater than 0 RPM is sent.

Conditions for Clearing the DTC

These are type B DTC's

Reference Information

Schematic Reference

HVAC Schematics on page 10-81

Connector End View Reference

Component Connector End Views on page 11-455

Description and Operation

Automatic HVAC Description and Operation on page 10-144

Electrical Information Reference

- *Circuit Testing on page 11-871*
- *Connector Repairs on page 11-895*
- *Testing for Intermittent Conditions and Poor Connections on page 11-877*
- *Wiring Repairs on page 11-883*

DTC Type Reference

Powertrain Diagnostic Trouble Code (DTC) Type Definitions on page 6-92

Scan Tool Reference

Control Module References on page 6-3 for scan tool information

Circuit/System Verification

1. Vehicle in Service Mode.
2. Verify that DTCs P0F0A-P1F0D are not set.

⇒ **If any of the DTCs are set**

2.1. Program the G1 A/C Compressor and the K114B Hybrid/EV Powertrain Control Module 2 with the latest software calibration.

2.2. Verify the DTCs do not set

⇒ If any of the DTCs set, replace the affected control module.

⇓ If none of the DTCs are set

2.3. All OK.

⇓ **If none of the DTCs are set**

3. All OK.

Repair Instructions

Perform the *Diagnostic Repair Verification on page 6-123* after completing the repair.

- *HVAC Component Replacement Reference on page 10-87*
- *Control Module References on page 6-3* for Hybrid/EV powertrain control module 2 replacement, programming and setup

Symptoms - HVAC Systems - Automatic

Note: The following steps must be completed before using the symptom tables:

1. Perform the *Diagnostic System Check - Vehicle on page 6-91* before using the HVAC System Malfunction procedure in order to verify that all of the following are true:
   - There are no DTCs set.
   - The control modules can communicate via the serial data link.
2. Review the system operation in order to familiarize yourself with the system functions. Refer to *Automatic HVAC Description and Operation on page 10-144*.

Visual/Physical Inspection

Note: Shutting one or more outlets may adversely affect the Automatic HVAC system by producing erroneous duct air temperature sensor readings in the duct connecting to the closed outlet. Where possible, always operate the Automatic HVAC system with all outlets open.

- Inspect for aftermarket devices which may affect the operation of the HVAC System. Refer to *Checking Aftermarket Accessories on page 11-871*.
- Inspect the easily accessible or visible system components for obvious damage or conditions which may cause the symptom.
- Verify the A/C compressor turns freely and is not seized.
- Verify that the customer is using the correct key to enable personalization and is not inadvertently activating auxiliary HVAC controls.
- The A/C compressor will not operate in cold outside air temperatures.
- The following conditions may cause window fogging:
  - Wet carpet or mats
  - High humidity
  - Interior water leak
  - Blocked A/C evaporator drain tube
  - Maximum passenger capacity
  - Blocked body pressure relief valves
- Inspect the air distribution system for causes of reduced air flow:
  - Obstructed or dirty passenger compartment air filter, if equipped
  - Blocked or damaged air inlet or outlet vents

Intermittent

Faulty electrical connections or wiring may be the cause of intermittent conditions. Refer to *Testing for Intermittent Conditions and Poor Connections on page 11-877*.

Symptom List

Refer to *HVAC System Malfunction on page 10-130* in order to diagnose the symptom.

HVAC System Malfunction

Diagnostic Instructions

- Perform the *Diagnostic System Check - Vehicle on page 6-91* prior to using this diagnostic procedure.
- Review *Strategy Based Diagnosis on page 6-83* for an overview of the diagnostic approach.
- *Diagnostic Procedure Instructions on page 6-84* provides an overview of each diagnostic category.

Diagnostic Aids

Check the following mechanical fault sources:

- Air distribution box
- Air distribution hoses/air distribution ducts

Reference Information

Schematic Reference

HVAC Schematics on page 10-81

Connector End View Reference

Component Connector End Views on page 11-455

Description and Operation

Automatic HVAC Description and Operation on page 10-144

Electrical Information Reference

- *Circuit Testing on page 11-871*
- *Connector Repairs on page 11-895*
- *Testing for Intermittent Conditions and Poor Connections on page 11-877*
- *Wiring Repairs on page 11-883*

Scan Tool Reference

Control Module References on page 6-3 for scan tool information

Special Tools

GE-50300 ACR Air Conditioning Service Center

Circuit/System Verification

Note: Check for bulletins before proceeding.

1. Vehicle in Service Mode.
2. Verify every applicable scan tool Switch parameter changes when pressing the appropriate switch on the A26 HVAC Controls.

⇒ **If any parameter does not change**

Replace the A26 HVAC Controls.

⇓ **If all parameters change**

3. Verify the blower motor operates properly with the blower motor switch in each speed position.

⇒ **If the blower motor does not operate properly in each speed position**

Refer to *DTC B0193 on page 10-98*.

⇓ **If the blower motor operates properly in each speed position**

4. Verify the HVAC doors listed below move when pressing the appropriate switch.
   - Temperature
   - Mode
   - Recirculation

⇒ **If any HVAC door does not move**

Refer to *DTC B0223, B0233, B023A, or B0408 on page 10-101*.

⇓ **If all HVAC doors move**

5. Install the GE-50300 ACR Air Conditioning Service Center.
6. Verify the high side pressure reading on the Air Conditioning Service Center is within 10% of the scan tool A/C High Side Pressure Sensor parameter.

⇒ **If the reading is not within 10%**

Refer to *DTC P0532 or P0533 on page 10-112*.

⇓ **If the reading is within 10%**

7. Verify the A/C High Side Pressure Sensor parameter is between 269−2929 kPa (39 −425 PSI).

⇒ **If the reading is not between 269−2929 kPa (39 −425 PSI)**

Refer to *Air Conditioning (A/C) System Performance Test on page 10-5*

⇓ **If the reading is between 269−2929 kPa (39 −425 PSI)**

8. Verify the low side pressure reading on the Air Conditioning Service Center is within 10% of the scan tool A/C Low Side Pressure Sensor parameter.

⇒ **If the reading is not within 10%**

Refer to *DTC P151C or P2516-P2518 on page 10-123*.

⇓ **If the reading is within 10%**

9. Verify the A/C Low Side Pressure Sensor parameter is between 269−2929 kPa (39 −425 PSI).

⇒ **If the reading is not between 269−2929 kPa (39 −425 PSI)**

Refer to *Air Conditioning (A/C) System Performance Test on page 10-5*

⇓ **If the reading is between 269−2929 kPa (39 −425 PSI)**

10. Verify the scan tool parameters listed below are within 10% of ambient temperature.
    - Lower Duct Air Temperature Sensor
    - Upper Duct Air Temperature Sensor
    - A/C Evaporator Temperature Sensor

⇒ **If not within 10% of ambient temperature**

Refer to *DTC B0173, B0178, or B3933 on page 10-90*.

⇓ **If within 10% of ambient temperature**

11. Verify the scan tool Coolant Heater Temperature Sensor parameter is within 10% of ambient temperature.

⇒ **If not within 10% of ambient temperature**

Refer to *DTC B046A on page 10-107*.

⇓ **If within 10% of ambient temperature**

12. Verify the scan tool parameters listed below are within 10% of actual conditions.
    - Passenger Compartment Humidity
    - Passenger Compartment Humidity Sensor Temperature
    - Passenger Compartment Windshield Temperature

⇒ **If not within 10% of actual conditions**

Refer to *DTC B018A, B048C, B048F, or B1395 on page 10-93*.

⇓ **If within 10% of actual conditions**

13. Vehicle ON, A/C system ON.
14. Verify cool air flows from the ducts with the temperature control in the coldest position.

⇒ **If the air is not cool**

Refer to *Air Conditioning Compressor Malfunction on page 10-131*.

⇓ **If the air is cool**

15. Verify the G36 Auxiliary Heater Coolant Pump turns On and Off when commanded with a scan tool.

⇒ **If the G36 Auxiliary Heater Coolant Pump does not turn On and Off**

Refer to *DTC B0468, B046B, or B046C on page 10-104*.

⇓ **If the G36 Auxiliary Heater Coolant Pump does turn On and Off**

16. Verify warm air flows from the ducts with the temperature control in the warmest position.

⇒ **If the air is not warm**

Refer to *Heating Performance Diagnostic on page 10-8*.

⇓ **If the air is warm**

17. Vehicle in Service Mode.
18. Verify the scan tool Sunload parameter changes while covering the B10B Ambient Light/Sunload Sensor with a shop towel or other suitable item.

⇒ **If the Sunload parameter does not change**

Refer to *DTC B0183 on page 10-96*.

⇓ **If the Sunload parameter changes**

19. Verify the actual inside air temperature, using a thermometer, is less than 3°C (5°F) difference from the scan tool Inside Passenger Compartment Air Temp. Sensor parameter.

⇒ **If greater than a 3°C (5°F) difference**

Refer to *DTC B0163 on page 10-88*.

⇓ **If less than a 3°C (5°F) difference**

20. All OK.

Repair Instructions

Perform the *Diagnostic Repair Verification on page 6-123* after completing the repair.

- *HVAC Component Replacement Reference on page 10-87*
- *Control Module References on page 6-3* for HVAC control module replacement, programming and setup

Air Conditioning Compressor Malfunction

Diagnostic Instructions

- Perform the *Diagnostic System Check - Vehicle on page 6-91* prior to using this diagnostic procedure.
- Review *Strategy Based Diagnosis on page 6-83* for an overview of the diagnostic approach.
- *Diagnostic Procedure Instructions on page 6-84* provides an overview of each diagnostic category.

Circuit/System Description

A/C Compressor

The AC compressor function is to provide refrigerant flow in the AC refrigerant loop to help cool down the cabin, help dehumidify the air in a defrost mode and help maintain the battery temperature. Rather than a more-typical pulley, the A/C compressor uses a 3-phase alternating current, high voltage electric motor to operate. It has an on-board inverter that takes high voltage direct current from the vehicle's high voltage battery and inverts it to alternating current for the motor. The AC compressor shall be activated when any of the three following events occur:

- The customer pushes the AC button or
- The HVAC control, in ECO climate or Comfort Climate Settings, requests the electric AC compressor on to help in cooling the cabin or removing moisture in conditions where the windows may fog or
- The hybrid/EV powertrain control module 2 requests the AC compressor on to help maintain the battery temperature

The hybrid/EV powertrain control module 2 uses values from the A/C refrigerant pressure sensor, A/C refrigerant thermistor, duct temperature sensors, ambient air temperature sensor , passenger compartment temperature sensor, evaporator temperature sensor, battery cell temperature sensors, battery coolant temperature sensors and battery coolant pumps to determine the speed at which the

compressor will operate. This message is sent from the hybrid/EV powertrain control module 2 to the A/C compressor control module via serial data message.

Diagnostic Aids

The following conditions must be met in order to turn on the A/C compressor:

- Battery voltage is between 9–18 V.
- A/C high side pressure is between 269–2 929 kPa (39–425 PSI).
- Throttle position is less than 100%.
- Evaporator temperature is greater than 3°C (38°F).
- ECM does not detect excessive torque load.
- The ambient temperature is above 1°C (34°F).
- Blower motor ON.

Reference Information

Schematic Reference

HVAC Schematics on page 10-81

Connector End View Reference

Component Connector End Views on page 11-455

Description and Operation

Automatic HVAC Description and Operation on page 10-144

Electrical Information Reference

- *Circuit Testing on page 11-871*
- *Connector Repairs on page 11-895*
- *Testing for Intermittent Conditions and Poor Connections on page 11-877*
- *Wiring Repairs on page 11-883*

Scan Tool Reference

Control Module References on page 6-3 for scan tool information

Circuit/System Verification

Note: Refer to *HVAC System Malfunction on page 10-130* before performing this procedure.

1. Vehicle ON, press and release the A/C Switch.
2. Verify the HVAC control module scan tool A/C Switch parameter changes between Active and Inactive.

⇒ **If the parameter does not change**

Replace the A26 HVAC Controls.

⇓ **If the parameter changes**

3. Set A/C system to coolest setting with blower ON.
4. Press and release the A/C switch several times.
5. Verify the K114B Hybrid/EV Powertrain Control Module 2 scan tool A/C Request Signal parameter changes between Active and Inactive.

⇒ **If the parameter does not change**

Replace the K33 HVAC Control Module.

⇓ **If the parameter changes**

Note: The scan tool A/C compressor command will automatically time out after 30 s.

6. Verify the A/C compressor turns ON when commanding the A/C compressor On and Off with a scan tool.

⇒ **If the A/C compressor does not turn ON**

Replace the G1 A/C Compressor

⇓ **If the A/C compressor turns ON**

7. Refer to *Air Conditioning (A/C) System Performance Test on page 10-5*.

Repair Instructions

Perform the *Diagnostic Repair Verification on page 6-123* after completing the repair.

- *HVAC Component Replacement Reference on page 10-87*
- *Control Module References on page 6-3* for HVAC control module replacement, programming and setup

Afterblow Enabling

The afterblow mode can be enabled using the scan tool. The afterblow mode allows the blower motor to operate after the engine has been turned off. This operation of the blower motor dries the evaporator core, which reduces the amount of microbial growth which can create undesirable odors.

Use the following procedure in order to enable the afterblow mode:

1. Connect the Scan Tool.
2. Turn ON the ignition, with the engine OFF.
3. Build the vehicle with the scan tool.
4. Select Module Diagnosis.
5. Select Remote Heater and Air Conditioning Control Module.
6. Select Configuration/Reset Functions.
7. Select HVAC Afterblow Configuration.

When afterblow has been enabled by the scan tool the blower motor will operate at 68% blower speed, following the sequence below up to 5 times. This could last up to an hour:

1. The blower motor will be OFF for 7–11 minutes.
2. The blower motor will RUN for 25–30 seconds.

The following conditions must be met for the HVAC module to operate the afterblow:

- The engine must be turned off for at least 30 min.
- The outside air temperature must be at least 21°C (70°F).
- The A/C compressor must have operated for more than 2 minutes before shut down during the latest key cycle.
- The system voltage must be at least 12 V.

Actuator Recalibration

HVAC Control Module Replacement

When replacing or disconnecting the HVAC control module, it will be necessary to perform a recalibration process. When installing or reconnecting the HVAC control module, be sure to perform the following:

Preferred Method (with Scan Tool)

Note: Do not adjust any controls on the HVAC control module while the HVAC control module is self-calibrating. If interrupted, improper HVAC performance will result.

1. Ignition OFF.
2. Disconnect the scan tool.
3. Install/connect the HVAC control module.
4. Connect all previously disconnected components.
5. Start the vehicle.
6. With the scan tool, initiate the HVAC Actuators Learn feature of the HVAC control module Special Functions menu.
7. Operate system and verify that no DTCs have set as current DTCs.
8. If DTC B101E 4B is set after attempting the actuator recalibration procedure, perform the following:
   8.1. Verify which actuator does not have a scan tool learn status parameter status of complete.
   8.2. Verify the unlearned actuator is physically rotating — A common cause of DTC B101E 4B is an actuator that is electrically OK but fails to physically rotate (e.g. stripped gears).
   8.3. If the unlearned actuator is not physically rotating, replace the actuator, otherwise replace the HVAC control module.

Alternate Method (without Scan Tool)

Note: Do not adjust any controls on the HVAC control module while the HVAC control module is self-calibrating. If interrupted, improper HVAC performance will result.

1. Clear all DTCs.
2. Ignition OFF.
3. Install/connect the HVAC control module.
4. Connect all previously disconnected components.
5. Remove the HVAC control module fuse for a minimum of 10 s.
6. Install the HVAC control module fuse.
7. Start the vehicle.
8. Wait 40 s for the HVAC control module to self-calibrate.

Actuator Replacement

When replacing an HVAC actuator it will be necessary to allow the HVAC control module to perform a recalibration process. When installing an HVAC actuator be sure to perform one of the following:

Preferred Method (with Scan Tool)

Note: Do not adjust any controls on the HVAC control module while the HVAC control module is self-calibrating. If interrupted, improper HVAC performance will result.

1. Clear all DTCs.
2. Ignition OFF.
3. Install the HVAC actuator.
4. Connect all previously disconnected components.
5. Start the vehicle.
6. With the scan tool, initiate the HVAC Actuators Relearn feature of the HVAC control module Special Functions menu.
7. Operate system and verify that no DTCs have set as current DTCs.
8. If DTC B101E 4B is set after attempting the actuator recalibration procedure, perform the following:
   8.1. Verify which actuator does not have a scan tool learn status parameter status of complete.
   8.2. Verify the unlearned actuator is physically rotating — A common cause of DTC B101E 4B is an actuator that is electrically OK but fails to physically rotate (e.g. stripped gears).
   8.3. If the unlearned actuator is not physically rotating, replace the actuator, otherwise replace the HVAC control module.

Alternate Method (without Scan Tool)

Note: Do not adjust any controls on the HVAC control module while the HVAC control module is self-calibrating. If interrupted, improper HVAC performance will result.

1. Clear all DTCs.
2. Ignition OFF.
3. Install the HVAC actuator.
4. Connect all previously disconnected components.
5. Remove the HVAC control module fuse for a minimum of 10 s.
6. Install the HVAC control module fuse.
7. Start the vehicle.
8. Wait 40 s for the HVAC control module to self-calibrate.

Repair Instructions

Heater and Air Conditioning Remote Control Replacement

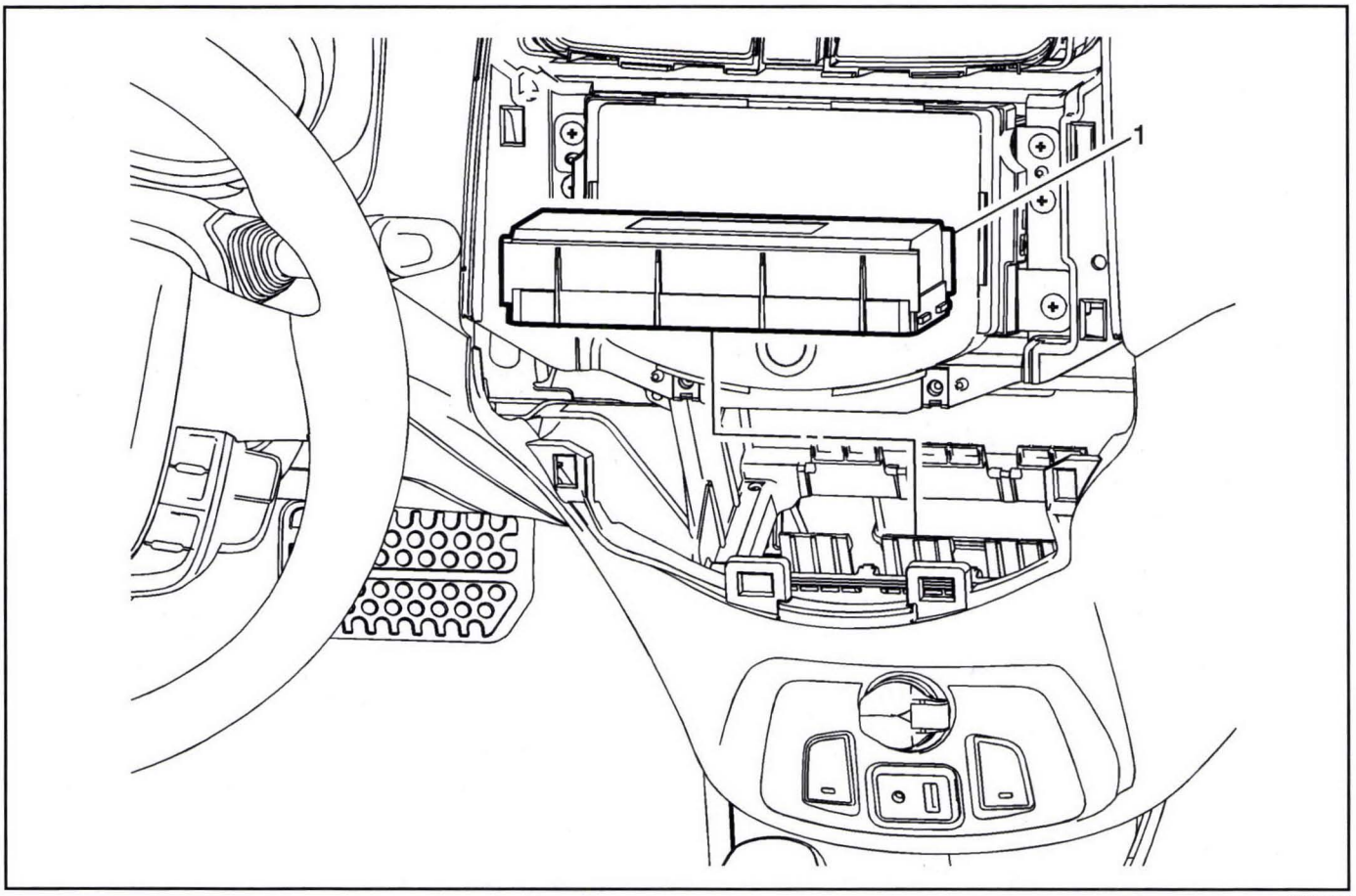

3136484

Heater and Air Conditioning Remote Control Replacement

Callout	Component Name
Preliminary Procedure Remove the heater and air conditioning auxiliary control assembly. Refer to *Auxiliary Heater and Air Conditioning Control Replacement on page 10-135*.	
1	Heater and Air Conditioning Remote Control **Procedure** 1. Un-clip the heater and air conditioning remote control from the heater and air conditioning control bracket. 2. Disconnect the heater and air conditioning remote control electrical connectors. 3. Perform the heater and air conditioning remote control programming procedure. Refer to *Control Module References on page 6-3*.

Auxiliary Heater and Air Conditioning Control Replacement

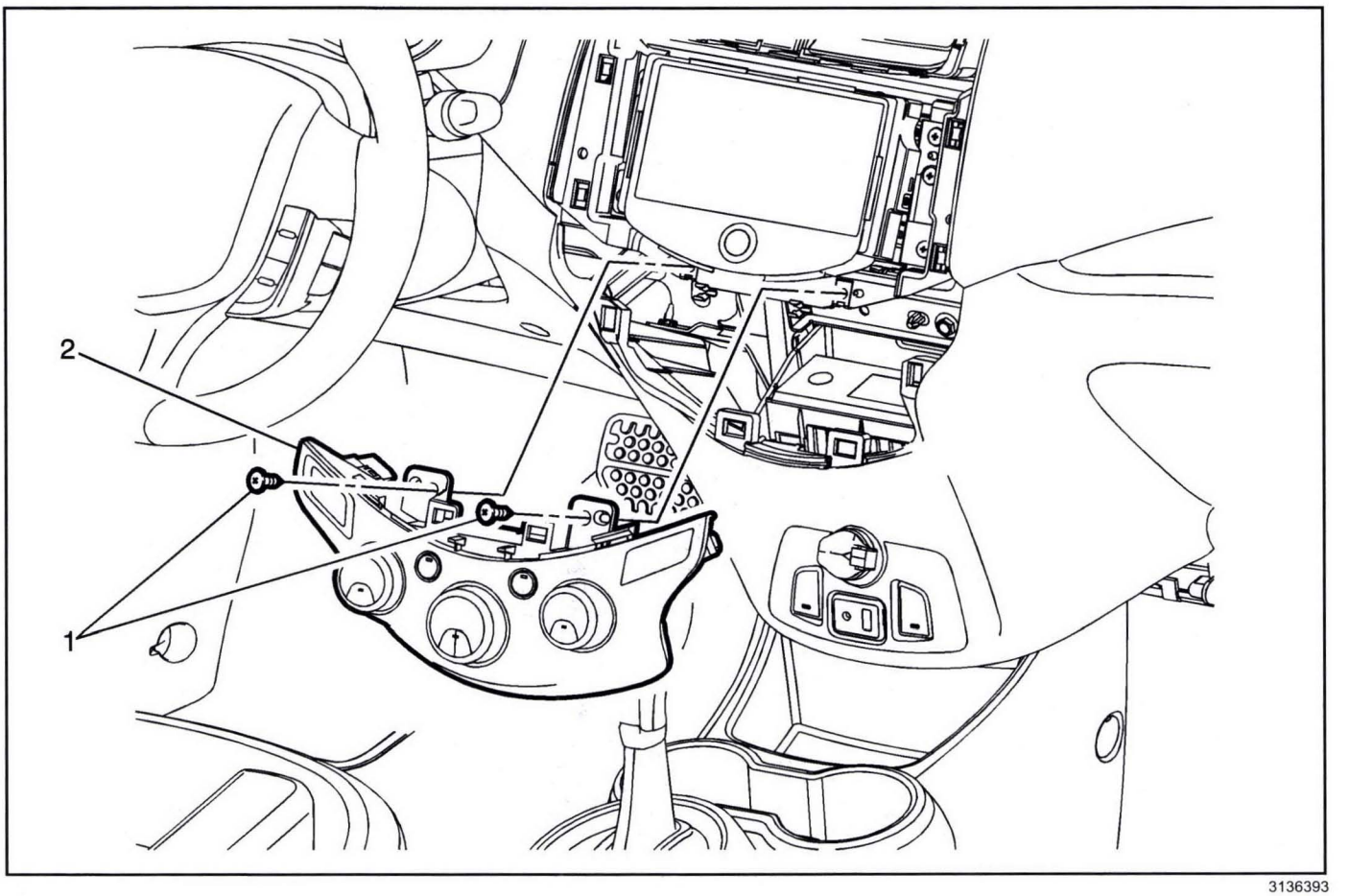

3136393

Auxiliary Heater and Air Conditioning Control Replacement

Callout	Component Name
Preliminary Procedure Remove the instrument panel center trim plate applique. Refer to *Instrument Panel Center Trim Plate Applique Replacement on page 2-25*.	
1	Heater and Air Conditioning Auxiliary Control Fastener (Qty: 2) **Caution:** Refer to *Fastener Caution on page 0-8*.
2	Heater and Air Conditioning Auxiliary Control **Procedure** 1. Disconnect electrical connections. 2. Transfer the components as necessary.

Air Inlet Valve Actuator Replacement

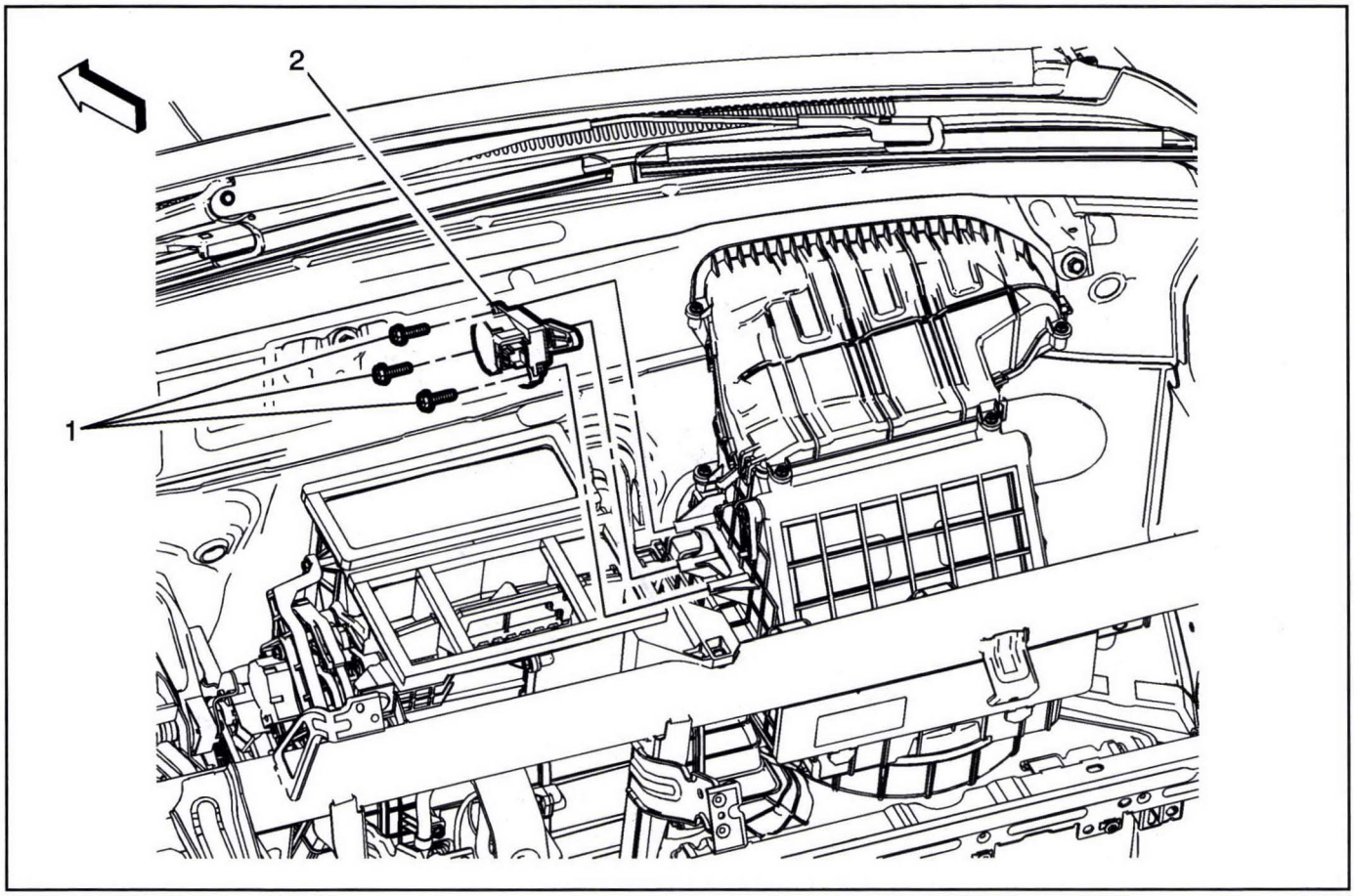

3212580

Air Inlet Valve Actuator Replacement

Callout	Component Name
Preliminary Procedure Remove the Instrument Panel Trim Pad. Refer to *Instrument Panel Trim Pad Replacement on page 2-31*.	
1	Air Inlet Valve Actuator Bolt (Qty: 3) **Caution:** Refer to *Fastener Caution on page 0-8*.
2	Air Inlet Valve Actuator **Procedures** 1. Disconnect the air inlet valve actuator electrical connector. 2. Perform the actuator calibration procedure. Refer to *Actuator Recalibration on page 10-133*.

Mode Valve Link Replacement

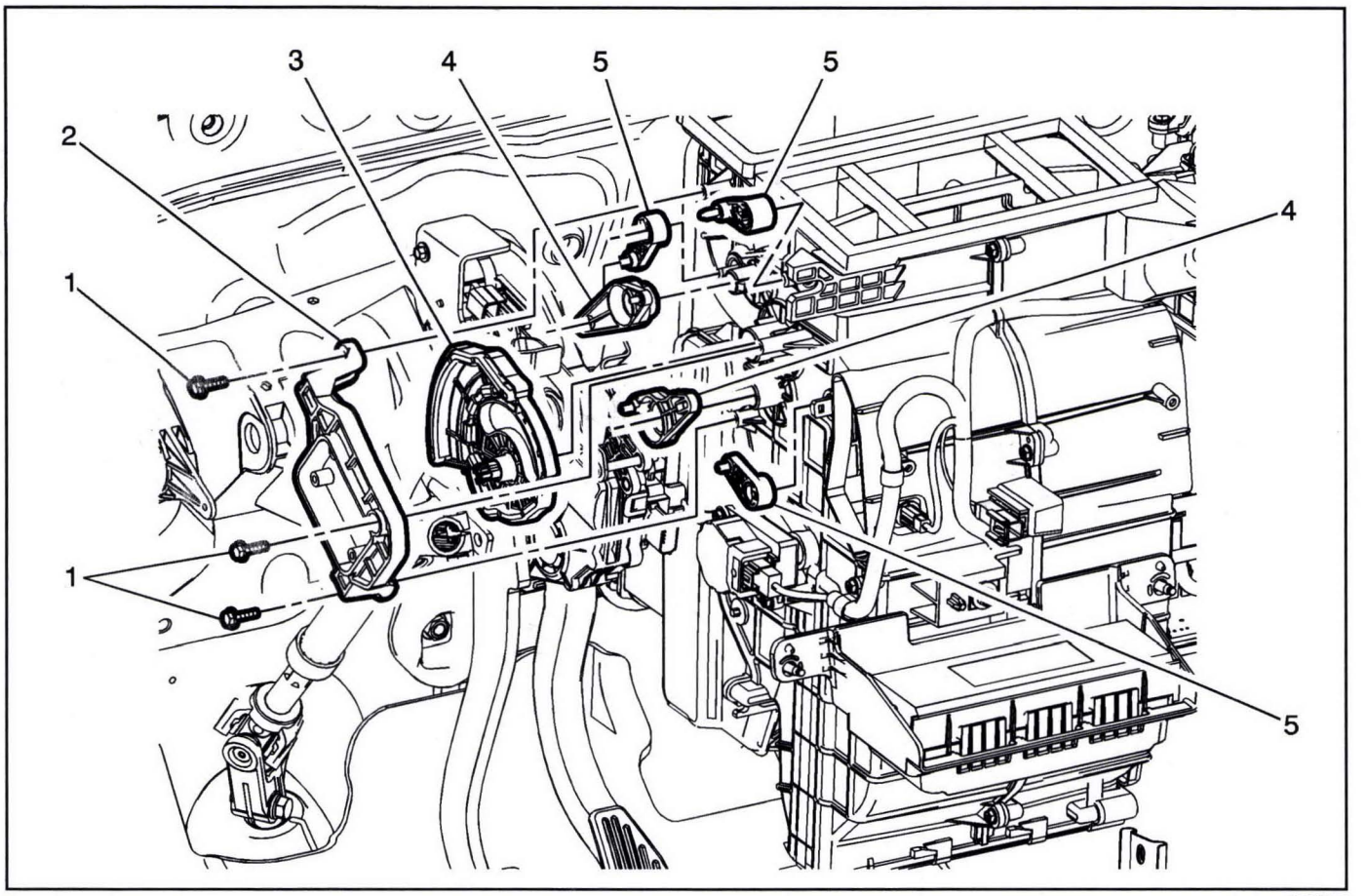

3220063

Mode Valve Link Replacement

Callout	Component Name
Preliminary Procedures 1. Remove the instrument panel tie bar. Refer to *Instrument Panel Tie Bar Replacement on page 2-40*. 2. Remove the mode valve actuator. Refer to *Mode Control Cam Actuator Replacement on page 10-138*.	
1	Mode Valve Actuator Bracket Bolt (Qty: 3) **Caution:** Refer to *Fastener Caution on page 0-8*.
2	Mode Valve Actuator Bracket **Procedure** Inspect the mode valve actuator bracket, and replace as necessary.
3	Mode Valve Cam **Procedure** Inspect the mode valve cam, and replace as necessary.
4	Mode Valve Cam link (Qty: 2) **Procedure** Inspect the mode valve cam links, and replace as necessary.
5	Mode Valve Cam Lever (Qty: 3) **Procedure** Inspect the mode valve cam levers, and replace as necessary.

Mode Control Cam Actuator Replacement

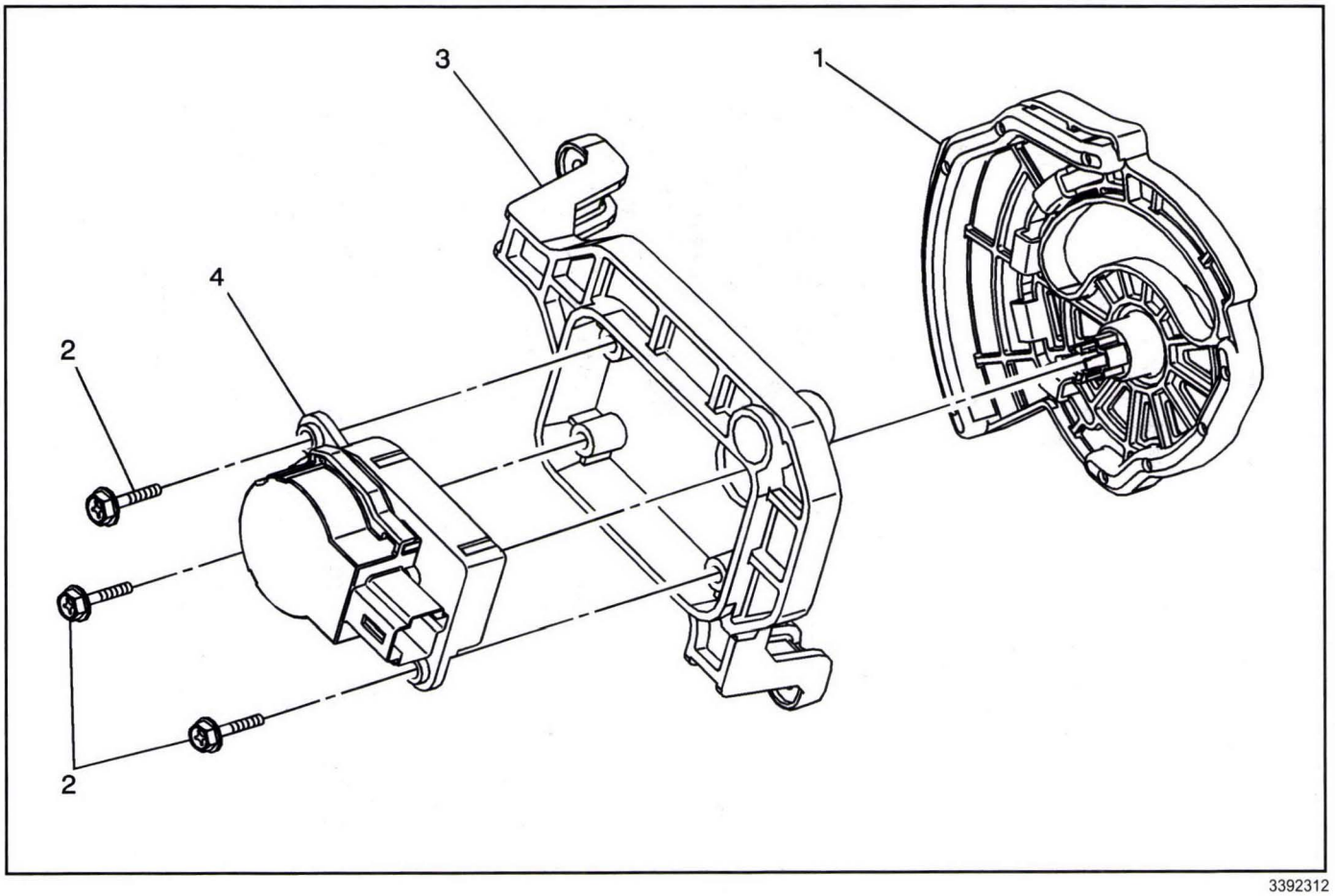

3392312

Mode Control Cam Actuator Replacement

Callout	Component Name
Preliminary Procedure Remove the mode valve link. Refer to *Mode Valve Link Replacement on page 10-137*.	
1	Mode Valve Link Cam
2	Mode Control Cam Actuator Bolt (Qty: 3) **Caution:** Refer to *Fastener Caution on page 0-8*.
3	Mode Valve Link Bracket
4	Mode Control Cam Actuator **Procedures** 1. Disconnect the mode control cam actuator electrical connector. 2. Perform the actuator calibration procedure. Refer to *Actuator Recalibration on page 10-133*.

Temperature Valve Actuator Replacement

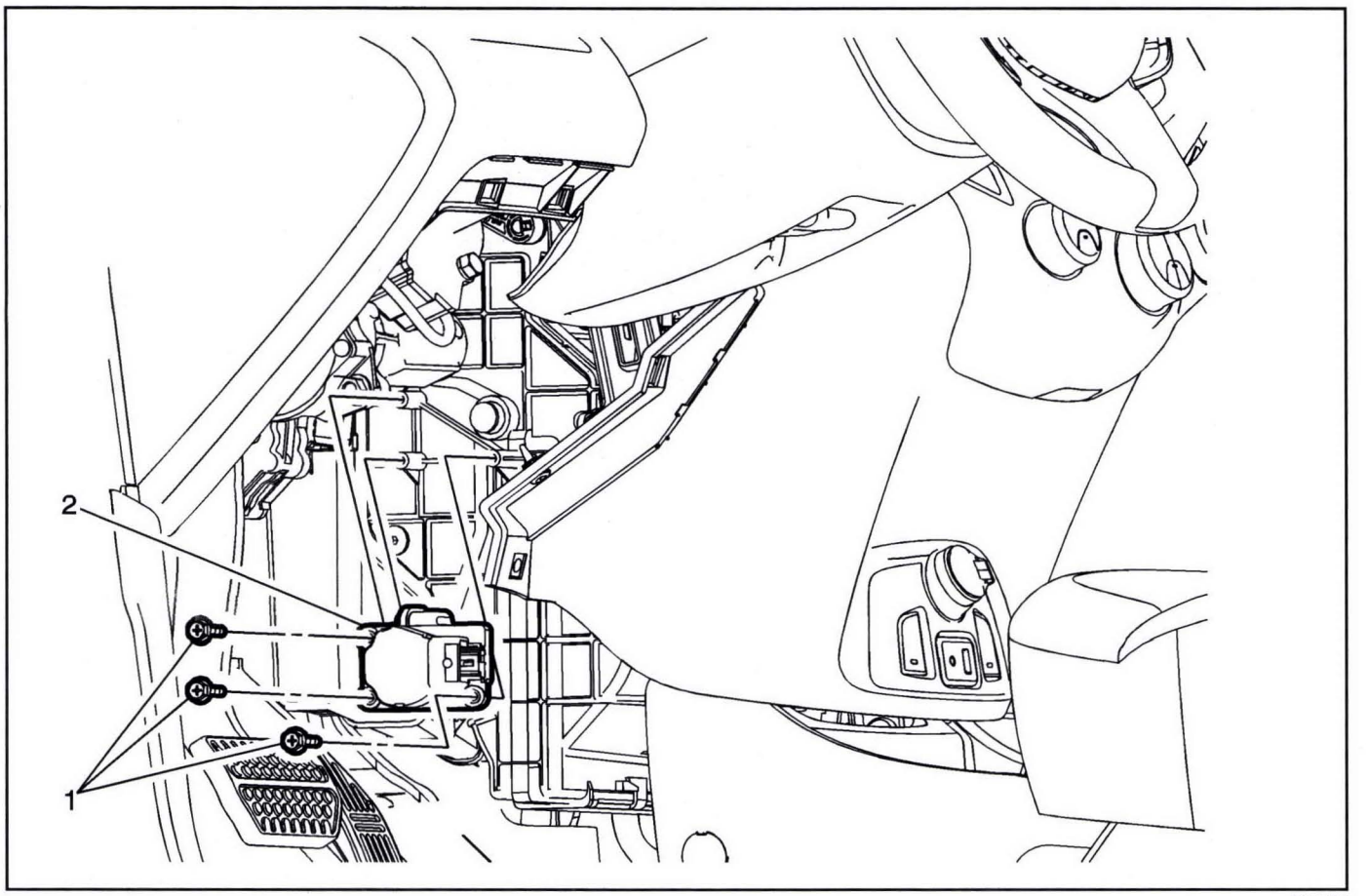

3211803

Temperature Valve Actuator Replacement

Callout	Component Name
Preliminary Procedure 1. Remove the driver side floor air outlet duct. Refer to *Floor Air Outlet Duct Replacement - Left Side on page 10-71*. 2. Remove driver side instrument panel lower airbag assembly. Refer to *Instrument Panel Lower Airbag Replacement - Driver Side on page 12-160*.	
1	Temperature Valve Actuator Bolt (Qty: 3) **Caution:** Refer to *Fastener Caution on page 0-8*.
2	Temperature Valve Actuator **Procedures** 1. Disconnect the temperature valve actuator electrical connector. 2. Perform the actuator calibration procedure. Refer to *Actuator Recalibration on page 10-133*.

Evaporator Air Temperature Sensor Replacement

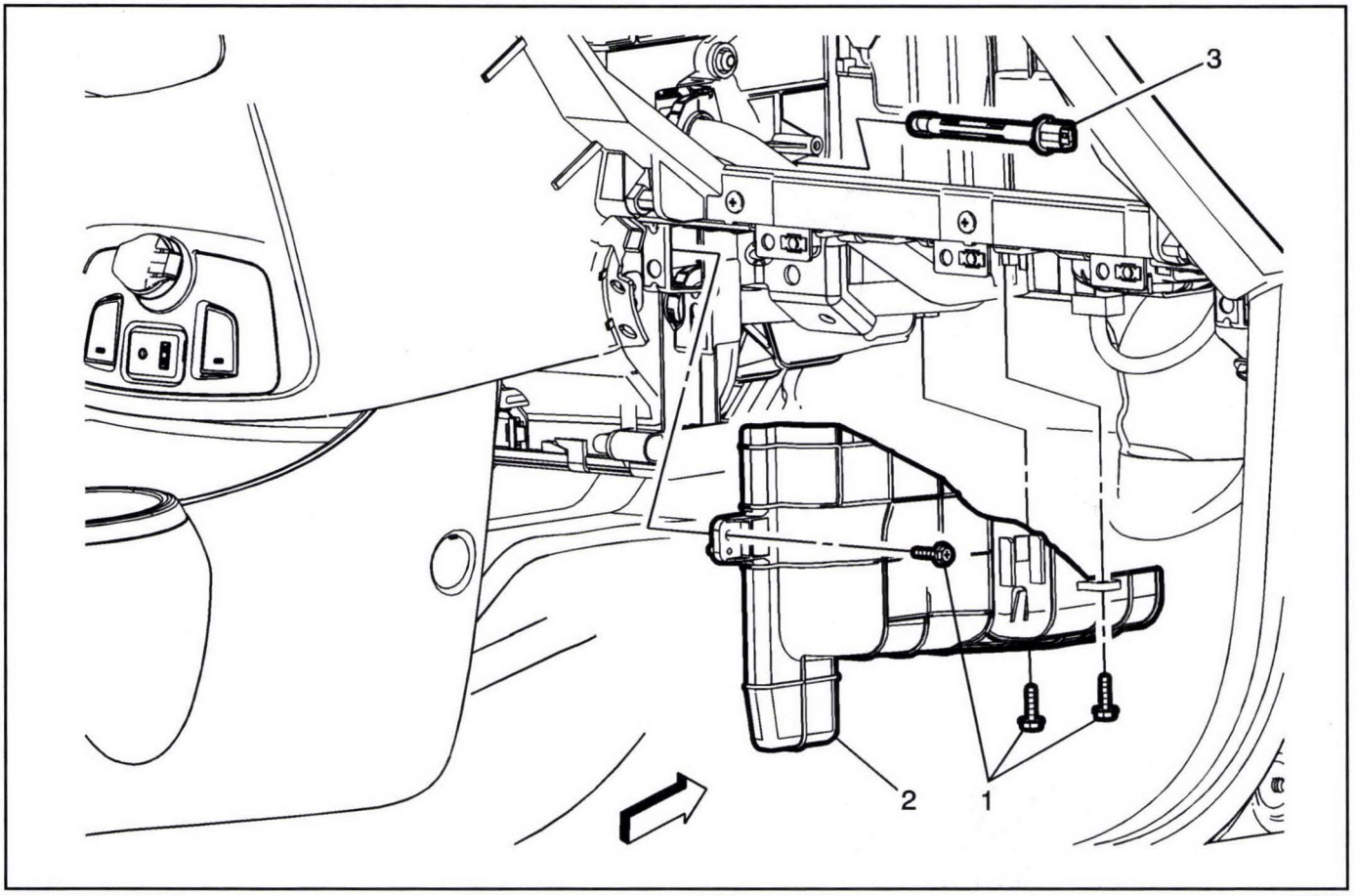

3217601

Evaporator Air Temperature Sensor Replacement

Callout	Component Name
Preliminary Procedure Remove the right front floor air outlet duct. Refer to *Floor Air Outlet Duct Replacement - Right Side on page 10-72*.	
1	Heater Core Pipe Side Cover Bolt (Qty: 3)
2	Heater Core Pipe Side Cover
3	Air Conditioning Evaporator Air Temperature Sensor **Procedures** 1. Disconnect the air conditioning evaporator air temperature sensor connector. 2. To remove the air conditioning evaporative temperature sensor, turn the air conditioning evaporative temperature sensor counter clock wise a quarter of a turn.

Inside Air Temperature Sensor Replacement - Left Side Lower

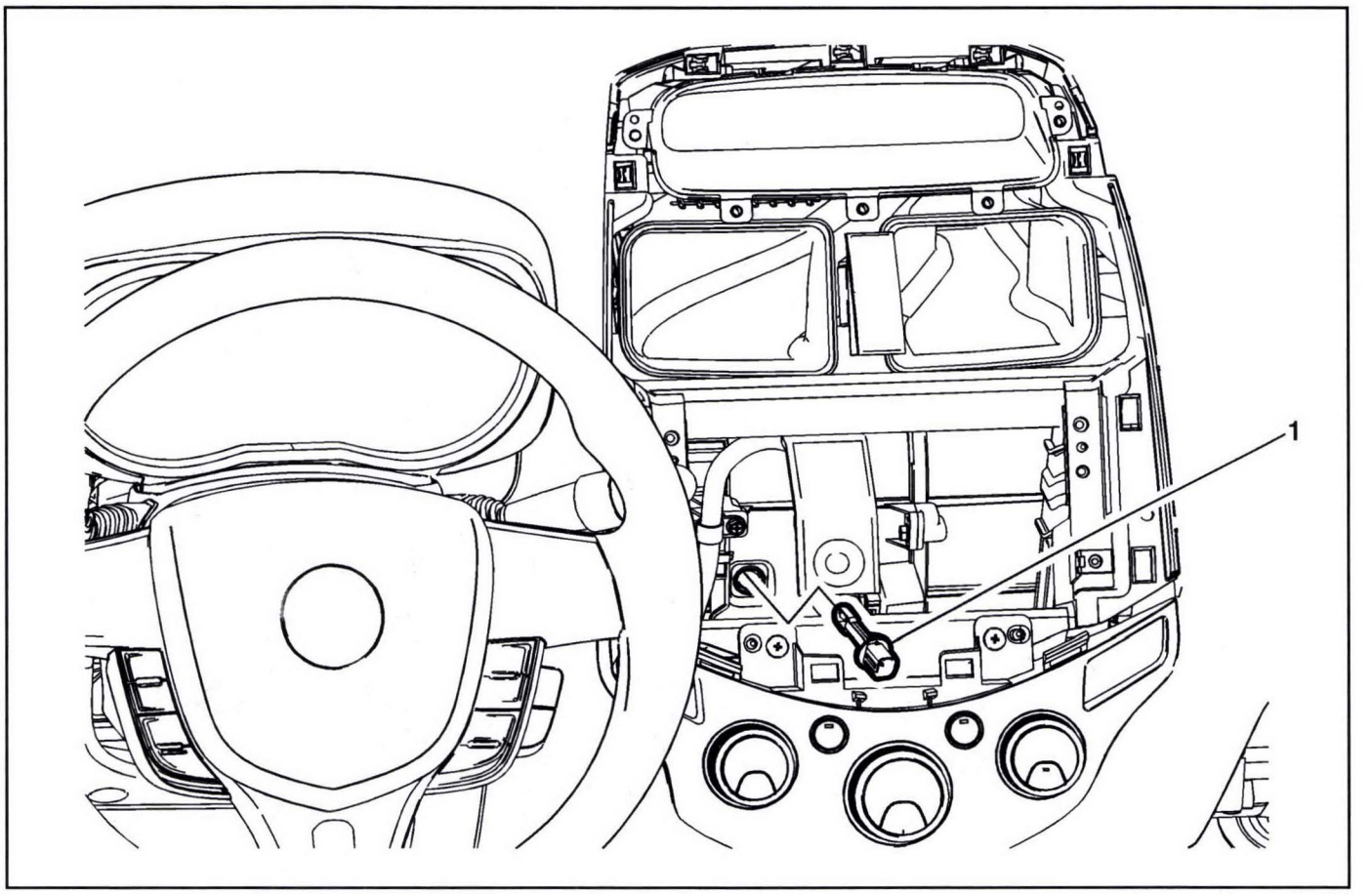

3218215

Inside Air Temperature Sensor Replacement - Left Side Lower

Callout	Component Name
Preliminary Procedure Remove the radio assembly. Refer to *Radio Replacement on page 8-57*.	
1	Inside Air Temperature Sensor - Lower Duct **Procedures** 1. Disconnect the lower duct inside air temperature sensor electrical connector. 2. To remove the right lower duct inside air temperature sensor, turn the right lower duct inside air temperature sensor counter clock wise a quarter of a turn.

Inside Air Temperature Sensor Replacement - Right Side Upper

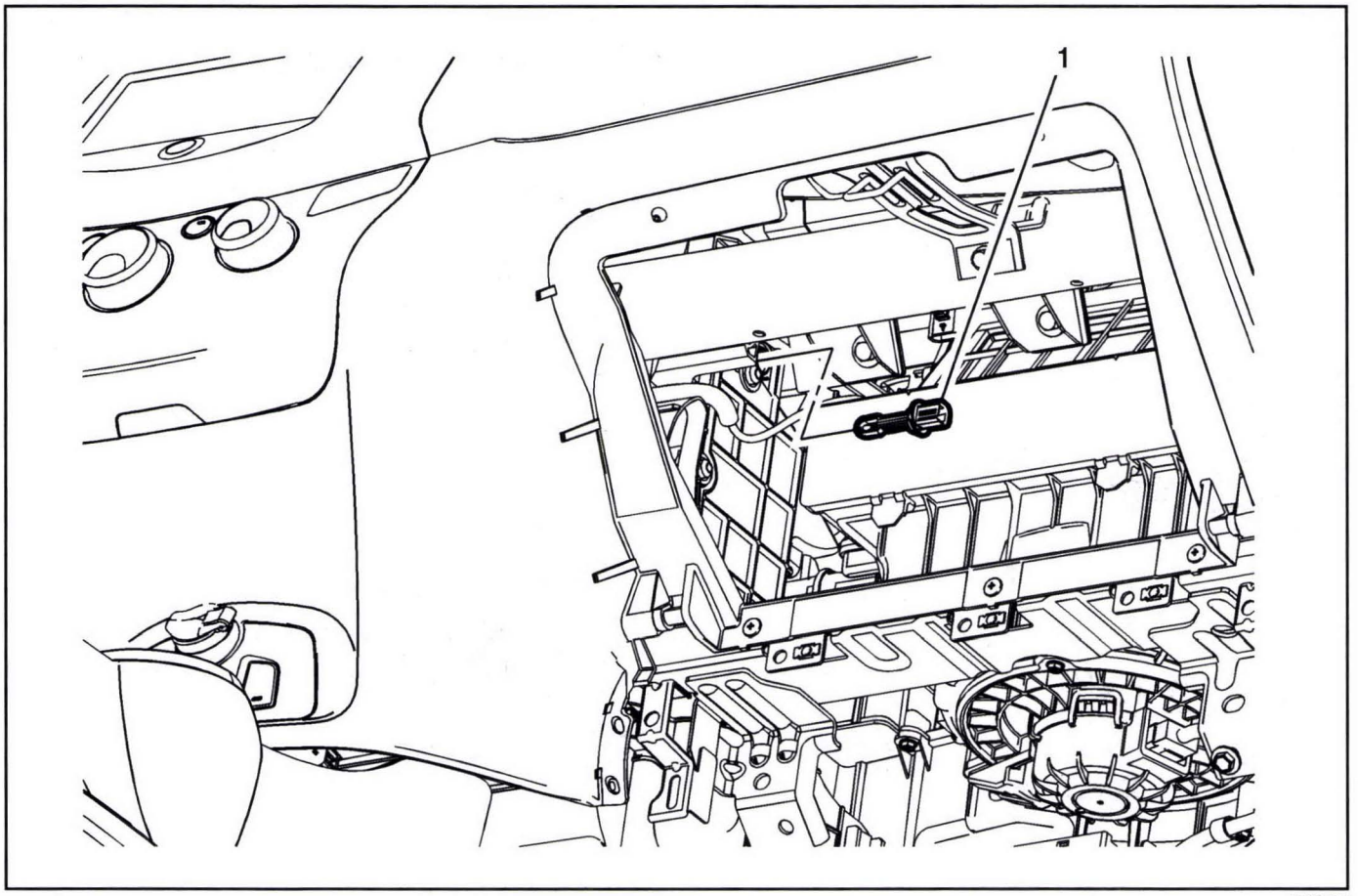

3218174

Inside Air Temperature Sensor Replacement - Right Side Upper

Callout	Component Name
Preliminary Procedure Remove the right front floor air outlet duct. Refer to *Floor Air Outlet Duct Replacement - Right Side on page 10-72*.	
1	Inside Air Temperature Sensor - Right Upper Duct **Procedures** 1. Disconnect the right upper duct inside air temperature sensor electrical connector. 2. To remove the right upper duct inside air temperature sensor, turn the right upper duct inside air temperature sensor counter clock wise a quarter of a turn.

Inside Air Moisture and Windshield Temperature Sensor Replacement

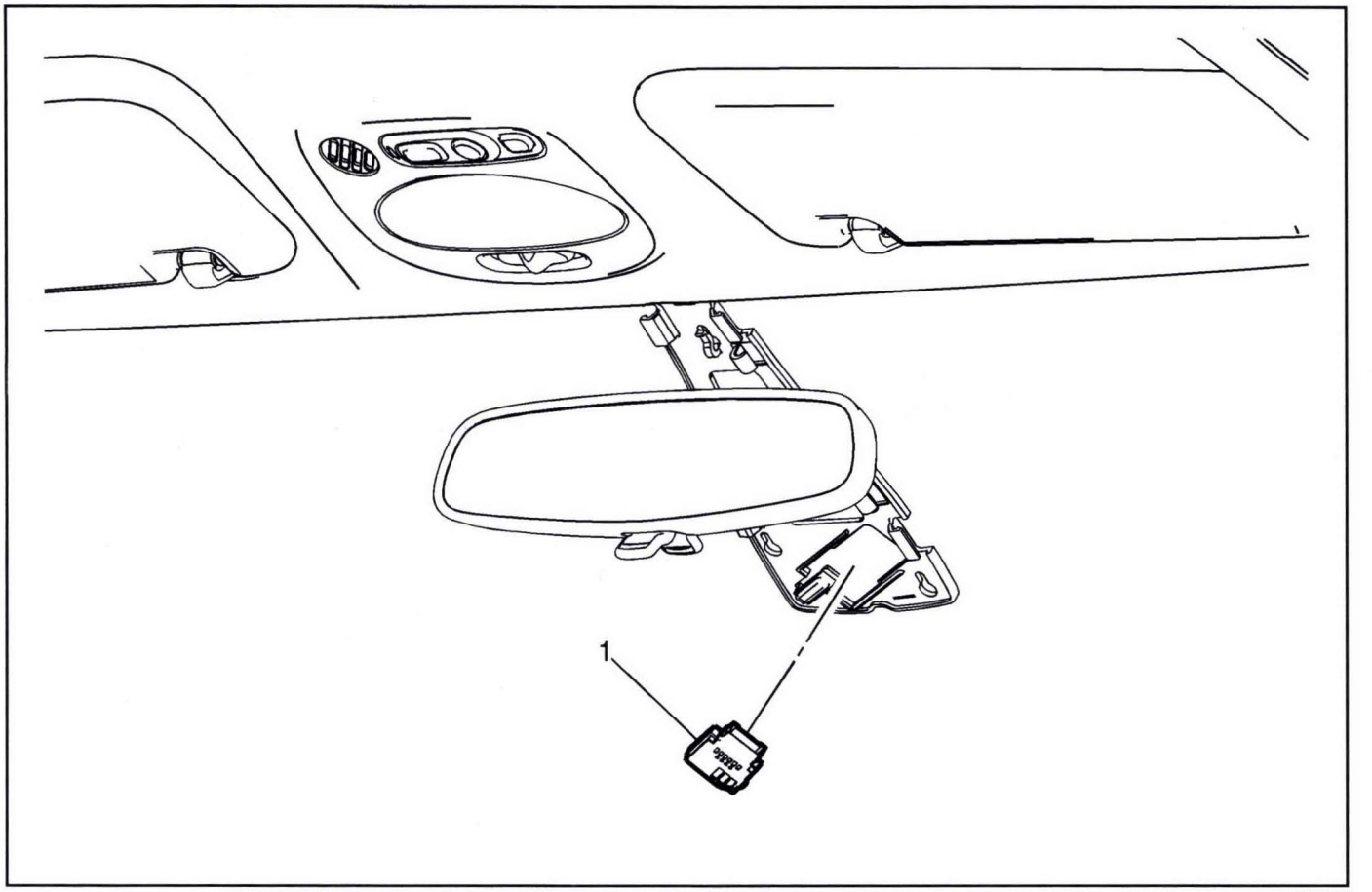

3218524

Inside Air Moisture and Windshield Temperature Sensor Replacement

Callout	Component Name
Preliminary Procedure Remove the inside rear view mirror wiring harness cover. Refer to *Inside Rearview Mirror Wiring Harness Cover Replacement on page 4-216*.	
1	Inside Air Moisture and Windshield Temperature Sensor **Procedures** 1. Unlatch the inside air moisture and windshield temperature sensor, from the inside rear view mirror cover bracket. 2. Disconnect the inside air moisture and windshield temperature sensor electrical connector.

Sun Load Temperature Sensor Replacement

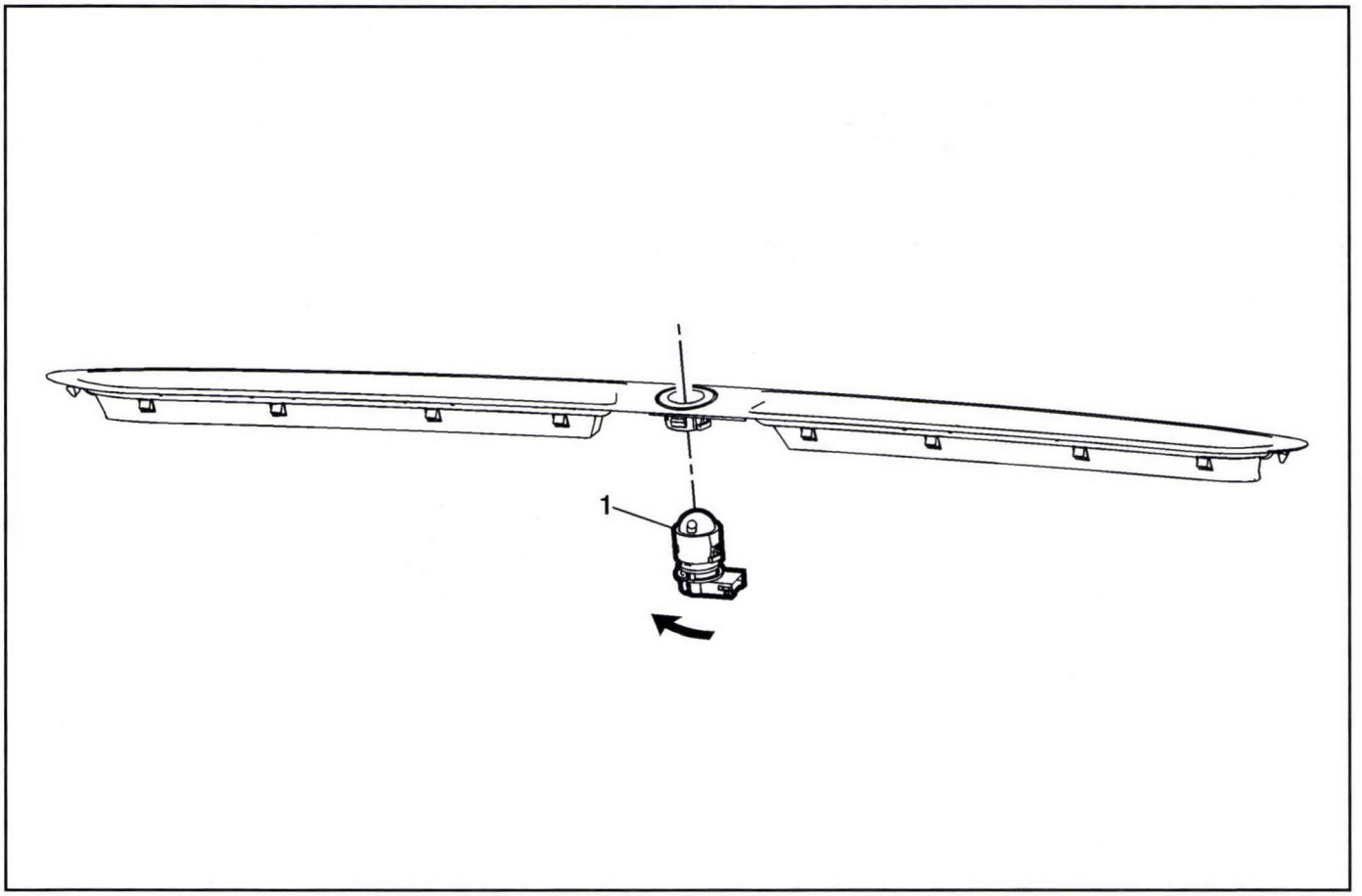

3211576

Sun Load Temperature Sensor Replacement

Callout	Component Name
Preliminary Procedure Remove the windshield defroster nozzle grille. Refer to *Windshield Defroster Nozzle Grille Replacement on page 10-68*.	
1	Sun Load Temperature Sensor **Procedures** 1. Disconnect the sun load temperature sensor electrical connector. 2. Turn the sun load temperature sensor quarter of a turn counter clockwise to remove.

Description and Operation

Automatic HVAC Description and Operation

HVAC Control Components

HVAC Control

The HVAC control contains all switches, which are required to control the functions of HVAC and serve as interface between the operator and the HVAC control module. The selected values are passed to the HVAC control module via serial data.

HVAC Remote Control Module

The HVAC control module is a serial data device that interfaces between the operator and the HVAC system to maintain and control desired air temperature and air distribution settings. The battery positive voltage circuit provides power that the HVAC control module uses for keep alive memory. If the battery positive voltage circuit loses power, all HVAC DTCs and settings will be erased from keep alive memory. The body control module (BCM), which is the vehicle power mode master, provides a device ON-Signal. The HVAC control module provides blower, air delivery mode and air temperature settings.

The HVAC control module supports the following features:

Feature	Availability
Purge	Yes

Feature	Availability
Personalization	Yes
Actuator Calibration	Yes

HVAC Coolant Pump

The HVAC control module will control a cabin coolant heater pump based on a valid flow rate. If the HVAC Heating system requests a coolant flow rate, the HVAC coolant pump will be commanded "on" and to the desired speed.

HVAC Cabin Coolant Sensor

The HVAC control module will monitor a coolant temperature sensor input. This will be used to determine the heat source requirements for the coolant heater control module. This input will also be used along with engine temperature and other vehicle inputs.

Mode Actuator

The mode actuator is a 5-pin stepper motor. The HVAC control module supplies a 12 V reference voltage to the stepper motor and energizes the 4 stepper motor coils with a pulsed ground signal. The stepper motor puts the mode flap into the calculated position in order to reach the selected position. The null point of the stepper motor will be calibrated, if the stepper motor is new. When the stepper motor is calibrated, the HVAC control module can drive the applicable coil to reach exactly the desired position of the flap.

Air Temperature Actuator

The air temperature actuator is a 5-pin stepper motor. The HVAC control module supplies a 12 V reference voltage to the stepper motor and energizes the 4 stepper motor coils with a pulsed ground signal. The stepper motor puts the mixed air flap into the calculated position, in order to reach the selected temperature. The null point of the stepper motor will be calibrated, if the stepper motor is new. When the stepper motor is calibrated, the HVAC control module can drive the applicable coil to reach exactly the desired position of the flap.

Recirculation Actuator

The recirculation actuator is a 5-pin stepper motor. The HVAC control module supplies a 12 V reference voltage to the stepper motor and energizes the 4 stepper motor coils with a pulsed ground signal. The stepper motor puts the recirculation flap into the calculated position in order to reach the desired position. The null point of the stepper motor will be calibrated, if the stepper motor is new. When the stepper motor is calibrated, the HVAC control module can drive the applicable coil to reach exactly the desired position of the flap.

Blower Motor Control Module

The blower motor control module controls the speed of the blower motor by increasing or decreasing the voltage drop on the ground side of the blower motor. The HVAC control module provides a low side pulse width modulation (PWM) signal to the blower motor control module via the blower motor speed control circuit. As the requested blower speed increases, the HVAC control module increases the amount of time that the speed signal is modulated to ground. As the requested blower speed decreases, the HVAC control module decreases the amount of time that the signal is modulated to ground.

Duct Temperature Sensors

The air temperature sensors are 2-wire negative temperature co-efficient thermistors. The sensors operate within a temperature range of -40 to +85°C (-40 to +185°F). The sensors are installed in the air distribution ducts and measure the temperature of the air that streams from the ducts. The HVAC control module uses these values to calculate the mixed air flap position.

Evaporator Temperature Sensor

The evaporator temperature sensor is a 2-wire negative temperature co-efficient thermistor. The sensor operates within a temperature range of -40 to +85°C (-40 to +185°F). The sensor is installed at the evaporator and measures its temperature. If the temperature drops close to 3°C (38°F), the A/C compressor will be commanded off by the HVAC control module in order to prevent icing of the evaporator.

A/C Refrigerant Temperature Sensor

The A/C refrigerant temperature sensor is a 2-wire negative temperature co-efficient thermistor. The sensor operates within a temperature range of -40 to +85°C (-40 to +185°F). The sensor is installed in the low side refrigerant line and measures its temperature. If the temperature drops close to 3°C (38°F), the A/C compressor will be commanded off by the Hybrid/EV powertrain control module 2 in order to prevent icing of the evaporator.

Windshield Temperature and Inside Moisture Sensor

The windshield temperature and inside moisture sensor includes the relative humidity sensor, windshield temperature sensor and humidity sensing element temperature sensor.

This sensor assembly provides information about:

- Relative humidity level at windshield (compartment side)
- Temperature of the windshield inside (compartment side)
- Temperature of the humidity sensor element

The relative humidity sensor measures the relative humidity of the compartment side of the windshield. It also detects the temperature of the windshield surface on the passenger compartment side. Both values are used as control inputs for the HVAC control module application to calculate the fog risk on windshield compartment side and ability to reduce fuel consumption by decreasing A/C compressor power to a minimum without causing any fog. The sensor will also enable partial recirculation mode in order to improve heat-up performance of the passenger compartment under cold ambient temperature conditions without the risk of mist build-up on the windshield. The humidity sensor element temperature sensor supplies the temperature of the humidity sensor element.

Ambient Light/Sunload Sensor

The ambient light/sunload sensor includes the sunload sensor and passenger compartment temperature sensor.

This sensor assembly provides information about:

- Sun heat intensity
- Passenger compartment temperature

The solar sensor is connected to ground and to a 5 V stabilized voltage supply through the HVAC control module. As the sunload increases, the sensor signal voltage also increases and vice versa. The signal varies between 1.4–4.5 V and is provided to the HVAC control module.

The passenger compartment temperature sensor is a negative temperature co-efficient thermistor. A signal and low reference circuit enables the sensor to operate. As the air temperature increases, the sensor resistance decreases. The sensor signal varies between 0–5 V.

Bright or high intensity light causes the vehicles interior temperature to increase. The HVAC system compensates for the increased temperature by diverting additional cool air into the vehicle.

A/C Compressor

The AC compressor function is to provide refrigerant flow in the AC refrigerant loop to help cool down the cabin, help dehumidify the air in a defrost mode and help maintain the battery temperature. Rather than a more-typical pulley, the A/C compressor uses a 3-phase alternating current, high voltage electric motor to operate. It has an on-board inverter that takes high voltage direct current from the vehicle's high voltage battery and inverts it to alternating current for the motor. The AC compressor shall be activated when any of the three following events occur:

- The customer pushes the AC button or
- The HVAC control, in ECO climate or Comfort Climate Settings, requests the electric AC compressor on to help in cooling the cabin or removing moisture in conditions where the windows may fog or
- The hybrid/EV powertrain control module 2 requests the AC compressor on to help maintain the battery temperature

The hybrid/EV powertrain control module 2 uses values from the A/C refrigerant pressure sensor, A/C refrigerant thermistor, duct temperature sensors, ambient air temperature sensor , passenger compartment temperature sensor, evaporator temperature sensor, battery cell temperature sensors, battery coolant temperature sensors and battery coolant pumps to determine the speed at which the compressor will operate. This message is sent from the hybrid/EV powertrain control module 2 to the A/C compressor control module via serial data message.

Air Speed

The blower control switch is part of the HVAC faceplate control. The selected value of the blower switch position is sent to the HVAC control module via serial data.

The blower motor control module is an interface between HVAC control module and blower motor. The blower motor control module regulates supply voltage and ground circuits to blower motor. The HVAC control module provides a PWM signal to the blower motor control module in order to command the desired blower motor speed. The blower motor control module supplies battery voltage to the blower motor and uses the blower motor ground as a low side control to adjust the blower motor speed. The voltage amounts between 2–13 V and changes linear to the height of the PWM signal.

Afterblow

Afterblow is a feature that dries the evaporator core by operating the blower motor after the engine is turned OFF. This reduces the amount of microbial growth that can create undesirable odors. The vehicle does not come equipped with the afterblow feature turned ON. If the afterblow feature is required due to an odor concern, it must be enabled using the scan tool Afterblow configuration function.

After the HVAC control module has been programmed for afterblow, the following conditions must be met for afterblow to operate:

- The engine has been turned OFF for at least 30 minutes.
- The ambient air temperature is at least 21°C (70°F).
- The A/C compressor operated for more than 2 minutes before shut down.
- The system voltage is at least 12 volts.

Once the above conditions have been met, the following sequence of events will occur:

1. The blower motor will RUN for 20 seconds.
2. The blower motor will be OFF for 10 minutes.
3. The blower motor will RUN for and additional 20 seconds.

Air Delivery

The HVAC control module controls the distribution of air within the passenger compartment by the use of the mode actuator. The modes that may be selected are:

- Defrost
- Defog
- Panel
- Floor
- BiLevel

In auto mode, the air delivery mode is controlled automatically based on cooling/warming needs of the compartment. The desired air distribution mode can be selected with the air distribution buttons at the HVAC faceplate control. The HVAC control delivers the values to the HVAC control module via serial data. The HVAC control module controls the mode actuator so that it drives the flap to the calculated position. Depending on the position of the flap, air is distributed through various ducts leading to the outlets in the dash. Turning the mode flap to the defrost position, the HVAC control module will move the recirculation actuator to outside air, reducing window fogging. When defrost is selected, the blower motor will be activated. The HVAC control module enables a high volume of air delivered to the front defrost vents. A/C is available in all modes.

The rear window defogger does not affect the HVAC system.

Heating and A/C Operation

The purpose of the heating and A/C system is to provide heated and cooled air to the interior of the vehicle. The A/C system will also remove humidity from the interior and reduce windshield fogging. Regardless of the temperature setting, the following can affect the rate that the HVAC system can achieve the desired temperature:

- Ambient air temperature
- Difference between inside and desired temperature
- Blower motor speed setting
- Mode setting
- Air conditioning control module operation
- Hybrid/EV powertrain control module 2 operation
- Coolant heater control module

Pressing the climate mode buttons (Comfort Mode or ECO Mode) enables the HVAC control module to determine whether to request A/C compressor and coolant heater activation. Based on the thermal conditions of the vehicle the HVAC control module sends a serial data message to the hybrid/EV powertrain control module 2 for the A/C request. The hybrid/EV powertrain control module 2 will request the A/C compressor control Module to engage A/C. The HVAC control module sends the heating request to the coolant heater control module to produce heat.

Climate Mode button (Fan Only) will disable all heating and cooling of the vehicle unless overridden by dehumidification requirements.

Recirculation Operation

The recirculation button is part of the HVAC faceplate control. The selected recirculation button position is sent to the HVAC control module via serial data. The HVAC control module controls the air intake through the recirculation actuator. The recirculation switch closes and opens the recirculation flap in order to circulate the air within the vehicle, or route outside air into the vehicle.

Inside air recirculation is prevented if the defrost mode is not active. When the defrost mode is active, the recirculation actuator opens the recirculation flap and outside air is circulated to the windshield to reduce fogging.

In automatic recirculation mode the values of the windshield temperature and inside moisture sensor are used as control inputs for the HVAC control module application to calculate the fog risk on the passenger compartment side of the windshield. The A/C compressor and the defrost mode are activated to prevent or remove fog on the passenger compartment side of the windshield.

Automatic Operation

The user can select to operate the Blower, Recirculation and Air Delivery operations in auto per auto operation mode.

To put the HVAC system in full automatic mode, the following is required:

1. The auto button must be pressed.
2. The system indicates that all 3 functions are being operated automatically by lighting the auto button LED.

When the auto button is pressed, the system responds by putting the blower, air delivery and recirculation into auto mode. If any of these functions are adjusted then the auto button indication shall go off and the function will leave auto operation and follow the user requested setting: auto, blower, air delivery and recirculation. In this setting the blower request is adjusted to quickly heat the cabin initially. After comfort is reached, the blower is mimized to reduce noise and temperature drifts.

Under cold ambient temperatures, the automatic HVAC system provides heat in the most efficient manner. The operator can select an extreme temperature setting but the system will not warm the vehicle any faster. Under warm ambient temperatures, the automatic HVAC system also provides air conditioning in the most efficient manner. Selecting an extreme cool temperature will not cool the vehicle any faster.

In automatic mode the values of the windshield temperature and inside moisture sensor are used as control inputs for the HVAC control module application to calculate the fog risk on the passenger compartment side of the windshield and ability to reduce fuel consumption by decreasing A/C compressor power to a minimum without causing any fog. The A/C compressor and the defrost mode may be activated to prevent or remove fog on the passenger compartment side of the windshield. The sensor will also enable partial recirculation mode in order to improve heat-up performance of the passenger compartment under cold ambient temperature conditions without the risk of mist build-up on the windshield.

Coolant Heater Control Module

The coolant heater control module is an essential element of the hybrid heating system. The hybrid/EV powertrain control module 2 controls the passenger compartment heater coolant control valve , and the HVAC commands the coolant heater control module activation. Heated coolant either from the engine or the coolant heater control module will meet HVAC temperature demands. The coolant heater control module will be commanded "off" if the coolant temperature exceeds the desired temperature.

Coolant heat generated by the engine is also an element of the heating system. Once the engine coolant is warm enough to supply the required heat, the passenger compartment heater coolant control valve will move to the 'link' position, which allows sharing of coolant between the engine, the coolant heater control module and passenger compartment heater core. The coolant heater control module power level will be reduced and/or cycled on/off as the engine turns on/off during charge-sustaining mode, maintaining cabin comfort. When the engine is utilized for charge sustaining mode the thermostat will control the normal engine operating coolant temperature. The thermostat

also creates a restriction for the cooling system that promotes a positive coolant flow and helps prevent cavitation.

Heater coolant enters the heater core through the inlet heater hose, in a pressurized state. The heater core is located inside the HVAC module. The ambient air drawn through the HVAC module, absorbs the heat of the coolant flowing through the heater core. Heated air is distributed to the passenger compartment, through the HVAC module, for passenger comfort. Opening or closing the air temperature flap controls the amount of heat delivered to the passenger compartment. The coolant exits the heater core through the return heater hose and recirculates back to the system as controlled by the coolant passenger compartment heater coolant control valve.

A/C Compressor Cycle

Refrigerant is the key element in an air conditioning system. The refrigerant R-1234yf is utilized in this vehicle. R-1234yf is a very low temperature gas that can transfer the undesirable heat and moisture from the passenger compartment to the outside air.

The compressor builds pressure on the vapor refrigerant. Compressing the refrigerant also adds heat to the refrigerant. The refrigerant is discharged from the compressor, through the discharge hose, and forced to flow to the condenser and then through the balance of the A/C system.

Compressed refrigerant enters the condenser in a high temperature, high pressure vapor state. As the refrigerant flows through the condenser, the heat of the refrigerant is transferred to the ambient air passing through the condenser. Cooling the refrigerant causes the refrigerant to condense and change from a vapor to a liquid state.

The condenser is located in front of the radiator for maximum heat transfer. The condenser is made of aluminum tubing and aluminum cooling fins, which allows rapid heat transfer for the refrigerant. The semi-cooled liquid refrigerant exits the condenser and flows to the Receiver/Dehydrator(R/D).

The R/D contains desiccant that absorbs moisture that may be in the refrigerant system. The R/D also acts as a storage vessel to ensure that a steady flow of liquid reaches the Thermal Expansion Valve (TXV). The refrigerant exits the R/D and flows through the liquid line to the TXV.

The TXV is located at the front of dash and attaches to the evaporator inlet and outlet pipes. The TXV is the dividing point for the high and the low pressure sides of the A/C system. As the refrigerant passes through the TXV, the pressure on the refrigerant is lowered. The TXV also meters the amount of liquid refrigerant that can flow into the evaporator.

Refrigerant exiting the TXV flows into the evaporator core in a low pressure, liquid state. The HVAC control module blows air through the evaporator core. Warm and moist air will cause the liquid refrigerant to boil inside of the evaporator core. The boiling refrigerant absorbs heat from the ambient air and draws moisture onto the evaporator. The refrigerant exits the evaporator through the suction line and back to the A/C compressor, in a vapor state, and completing the A/C cycle of heat removal. At the A/C compressor, the refrigerant is compressed again and the cycle of heat removal is repeated.

The conditioned air is distributed through the HVAC control module for passenger comfort. The heat and moisture removed from the passenger compartment will also change form, or condense, and is discharged from the HVAC control module as water through a drain to outside(underside) of the vehicle.

The A/C system is mechanically protected with the use of a high pressure relief valve. If the A/C refrigerant pressure sensor fails or if the refrigerant system becomes restricted and refrigerant pressure continued to rise, the high pressure relief will pop open and release refrigerant from the system.

3

300-Volt Battery Positive and Negative Cable
Replacement 9-454, 9-457

A

A/C Diagnostics Chart 10-8
ABS
Description and Operation 5-91
Accessory DC Power Control Module
Description and Operation 9-192
Programming and Setup 6-5
Replacement 9-189
Scan Tool Information 6-20
Accessory Power
Receptacle Retainer Replacement 11-248
Accessory Power Receptacle
Replacement 11-249
Acronyms and Units 1-4
Active Grille
Air Shutter Description and Operation 3-67
Air Shutter Malfunction 3-49, 3-51
Adhesives, Fluids, Lubricants,
and Sealers 2-18, 4-202, 5-96, 5-133, 10-4, 15-48, 16-5
AFL/EPC Connectors 11-898
Afterblow Enable Procedure 10-132
Air Conditioning
O-Ring Seal Replacement 10-30
Refrigerant Pressure Sensor Replacement -
High Pressure 10-42
Refrigerant Pressure Sensor Replacement -
Low Pressure 10-41
System Performance Test 10-5
Air Conditioning Compressor
Control Module Programming and Setup 6-5
Malfunction 10-131
Oil Diagnosis 10-11
Air Conditioning Compressor and Condenser Hose
Replacement 10-32
Air Conditioning Evaporator
Core Replacement 10-47
Hose Assembly Replacement 10-34
Module Drain Hose Replacement 10-49
Thermal Expansion Valve - Tube
Replacement 10-37
Thermal Expansion Valve Replacement 10-40
Air Distributor
Case Replacement 10-62
Air Hose Test 1-85
Air Inlet
Assembly Replacement 10-58
Air Inlet Grille Panel
Replacement 4-327
Air Inlet Housing
Replacement 10-59
Air Inlet Valve
Actuator Replacement 10-136
Air Outlet
Duct Replacement - Floor, Left 10-71
Duct Replacement - Floor, RH 10-72
Air Pressure Test 1-30
Air Temperature
Actuator Replacement 10-139
Air/Wind Noise Diagnosis 1-30
Airbag
Indicator Malfunction 12-147, 12-149
Sensing and Diagnostic Module
Replacement 12-155
Steering Wheel Module Coil Centering 12-158
Airbag Side Impact Sensor
Replacement - Center Pillar 12-166
Aluminum Wheel
Porosity Repair 15-50
Refinishing 15-51
Ambient Air Temperature
Gauge Sensor Replacement 8-92
Ambient Air Temperature Sensor
Resistance 8-76
Anti-Corrosion Treatment and Repair 3-141
Application Malfunction 8-28
Approximate Fluid Capacities
Automatic Transmission 16-5
Heating, Ventilation, and Air Conditioning 10-3
Hybrid/EV System Heating and Cooling 9-200
Hydraulic Brakes 5-133
Maintenance and Lubrication 1-32
Armrest Replacement
Front Seat 13-8
Arrows and Symbols 1-3
Assist Handle
Replacement 2-59
Audible Warnings Description and
Operation 8-98
Automated Bleed Procedure 5-72
Automatic HVAC Description and
Operation 10-144
Automatic Transmission
Fluid Leaks 16-30
Range Selector Lever Replacement 16-35
Automatic Transmission Auxiliary Fluid Pump
Control Module Scan Tool Information 6-21
Auxiliary Audio Input Malfunction 8-30
Auxiliary Battery
Wiring Harness
Replacement 9-530–9-532, 9-535
Auxiliary Heater
Inlet Hose Replacement 10-51
Auxiliary Heater Outlet Hose
Replacement 10-52
Auxiliary Radiator
Replacement 9-275

B

Backup Lamps
Malfunction 4-142
Basecoat/Clearcoat Paint Systems 3-141

Battery
Charge Indicator Replacement 8-97
Charging 9-16
Cover Seal Replacement 9-450
Current Sensor Replacement 9-20
Description and Operation 9-34
Electrical Drain/Parasitic Load Test 9-17
Inspection/Test 9-15
Replacement 9-28
Battery Cable
Replacement 9-515–9-517, 9-521
Battery Charger
Programming and Setup 6-5
Battery Energy Control Module
Programming and Setup 6-6
Replacement 9-451
Scan Tool Information 6-45
Battery Heater
Fuse Replacement 9-303
Replacement 9-306
Battery Negative Cable
Disconnect/Connect Procedure 9-20
Replacement 9-22
Battery Positive Cable
Replacement 9-24
Battery Tray
Replacement 9-30, 9-522
Blower Motor
Replacement 10-61
Blower Motor Control
Replacement 10-60
Bluetooth
Malfunction 8-33
Body Control Module
Bracket Replacement 11-235
Programming and Setup 6-6
Replacement 11-234
Scan Tool Information 6-22
Body Control System
Description and Operation 11-237
Body Hinge Pillar
Lower Reinforcement Replacement 3-87
Body Leans or Sways in Corners 15-30
Body Lock Pillar
Inner Panel Replacement 3-98
Outer Panel Reinforcement Replacement 3-97
Outer Panel Sectioning 3-95
Body Panel Paint Protector Replacement 2-4
Body Pressure Relief Valve
Replacement 2-71
Body Side Outer Panel
Reinforcement Replacement 3-102
Body Side Upper
Front Applique Replacement 2-5
Body Waterleak Repair 1-85
Bosch Connectors 11-901, 11-903
Brake
Hydraulic and Assist System Diagnosis 5-153
Brake and Accelerator Pedal Assembly
Replacement 5-173
Brake Caliper
Bracket Replacement - Front 5-116
Bracket Replacement - Rear 5-119
Inspection 5-101
Overhaul - Front 5-110
Overhaul - Rear 5-113
Replacement - Front 5-108
Replacement - Rear 5-109
Brake Control Brake Pedal Position Sensor
Calibration 5-76
Brake Fluid
Loss 5-148
Brake Hose
Replacement - Front 5-192
Brake Pad
Inspection 5-100
Replacement - Front 5-103
Replacement - Rear 5-105
Brake Pedal
Excessive Effort 5-144
Excessive Travel 5-143
Position Sensor Calibration 4-170
Position Sensor Replacement 4-170, 4-171
Pulsation 5-138
Pushrod Inspection 5-165
Travel Measurement and Inspection 5-162
Brake Pipe and Hose Inspection 5-164
Brake Pipe Replacement - Front Left Side 5-188
Brake Pipe Replacement - Front
Right Side 5-186
Brake Pressure Modulator Solenoid Valve
Calibration 5-76
Brake Pressure Modulator Valve
Bracket Replacement 5-83
Front Brake Pipe Replacement 5-181
Pipe Replacement 5-179
Replacement 5-76
Brake Pressure Modulator Valve Hose
Replacement 5-176
Brake Pressure Modulator Valve Rear Brake Pipe
Replacement 5-183
Brake Rotor
Assembled Lateral Runout Correction 5-126
Assembled Lateral Runout Correction -
Correction Plates 5-128
Assembled Lateral Runout Correction -
Indexing 5-126
Assembled Lateral Runout Correction -
On-Vehicle Lathe 5-129
Assembled Lateral Runout Measurement 5-98
Drum Balance Inspection 1-57
Refinishing 5-130
Replacement 5-122
Replacement - Rear 5-124
Surface and Wear Inspection 5-98
Thickness Measurement 5-97
Thickness Variation Measurement 5-97

Brake System
External Leak Inspection 5-162
Internal Leak Test 5-163
Noise 5-139
Slow Release 5-147
Vehicle Road Test 5-161
Brake System, Hydraulic, Assist, and Control
Description and Operation 5-215
Brake Warning Indicator Malfunction 5-137
Brake Warning System
Description and Operation 5-218
Brakes
Brake Pad and Rotor Burnishing 5-108
Drag 5-145
Braking Action Uneven
Front to Rear 5-142
Pulls to One Side 5-140
Bushing and Mating Shaft Inspection 16-31
Bushing, Bearing, and Washer Locations 16-15

C

Cabin Heater
Coolant Heater System Leak Testing 10-16
Coolant Heater System Loss of Coolant 10-14
Coolant Heater System Pressure Cap
Testing 10-15
Camber Adjustment
Front 15-64
Camber Description 15-64
Camera Image Display Module Replacement
- Rear 12-52
Cargo Center Courtesy Lamp
Bulb Replacement 4-190
Case Porosity Repair 16-31
Caster Adjustment
Front 15-64
Caster Description 15-65
Cell Battery
Cooling Manifold Inlet Hose
Replacement 9-336, 9-338
Cooling Manifold Outlet Hose
Replacement 9-339, 9-342
High Voltage Sensor Replacement 9-461
Replacement 9-462, 9-467, 9-473, 9-479, 9-485, 9-490
Center Courtesy Lamp
Replacement 4-174, 4-175
Center Courtesy Lamp Bulb
Replacement 4-177
Center Courtesy Lamp Lens
Replacement 4-176
Center Pillar
Applique Replacement 2-6
Lower Trim Panel Replacement 2-63
Upper Trim Panel Replacement 2-62
Charge Port
Housing Replacement 9-648
Charge Port Door
Replacement 9-647
Charge Port Door Description and
Operation 4-282
Charger Door
Ajar Indicator Malfunction 4-236, 4-238
Charging System
Description and Operation 9-34
Test 9-19
Checking Aftermarket Accessories 11-871
Chime
Malfunction 8-85
Circuit Protection
Circuit Breakers 11-883
Fuses 11-882
Fusible Links 11-883
Circuit Testing 11-871
Clear Secured High Voltage DTCs 9-539
Clearcoat Repair without Repainting 3-142
Clearcoat Thickness 3-143
Coaxial Cable Repairs 11-884
Communication Center Call Switch
Replacement 8-54
Communication Interface Module
Battery Replacement 8-56
Replacement 8-55
Component Connector End Views 11-455
Component Location
Automatic Transmission 16-14
Component Rotational Speed Calculation 1-41
Component Specifications
Disc Brakes 5-96
Compressor
Hose Assembly Replacement 10-31
Mounting Bracket Replacement 10-27
Replacement 10-26
Condenser
Replacement 10-43
Connector Position Assurance Locks 11-898
Connector Repairs 11-895
Content Theft Deterrent
Malfunction 12-187
Control Arm
Replacement - Lower 15-9
Control Module References 6-3
Control Module U Code List 11-18
Coolant Temperature Sensor
Replacement 9-271–9-273
Coolant/Water in Transmission 16-30
Cooling Fan
Malfunction 9-250
Cooling Fan and Shroud
Replacement 9-283
Cooling Fan Malfunction - DTC
P148A-P148C 9-233
Courtesy Lamps
Malfunction 4-143
Cruise Control
Description and Operation 9-48
Indicator Malfunction 9-44

Cruise Control (cont'd)
Malfunction - DTC B3794, P0564, P0565, P0567, P0568, P056C, P0580, P0581, P155A-P155C, or P162C 9-45
Switch Replacement 9-47
Customer Concern Verification Sheets 1-10

D

Data Link Communications
Description and Operation 11-237
Data Link References 11-232
DC Charging Disabled Reset 9-656
DC Power Conversion Test 9-169
Definition of Danger, Warning, Caution, and Note 0-3
Definitions and Abbreviations 16-92
Defrosting
Insufficient 10-10
Delphi Connectors 11-905–11-908, 11-910, 11-913, 11-915
Diagnostic Procedure Instructions 6-84
Diagnostic Repair Verification 6-123
Diagnostic Starting Point
Vehicle DTC Information 6-90
Diagnostic System Check
Instructions 6-87
Vehicle DTC Information 6-91
Diagnostic Trouble Code (DTC) List
Vehicle DTC Information 6-92
Digital Radio
Poor or No Reception 8-14, 8-34
Dimensions
Body 3-68
Disassembled Views
Automatic Transmission 16-8
Disc Brake
System Description and Operation 5-131
System Diagnosis 5-148
Dome Lamps
Malfunction 4-145
Door Ajar Indicator
Description and Operation 4-282
Malfunction 4-240
Door Component Views 11-395
Door Handle
Replacement - Front Inside 4-260
Replacement - Front Outside 4-262
Replacement - Rear Inside 4-266
Rod Adjustment - Front Outside 4-272
Rod Replacement - Front Outside 4-273
Door Lock and Ignition Lock
Folding and Non-Folding Key Cutting 1-22
Door Lock Switch
Replacement 4-281
Door Open Indicator Switch
Replacement 4-256
Door Will Not Open/Close, Door Binding, or Locks, Handles, or Cylinders Do Not Function 4-252
Drain Cock
Radiator Drain Cock Replacement 9-286
Drive Motor
Replacement 16-45, 16-54
Drive Motor Battery
Charger Receptacle Replacement 9-652, 9-654
Charger Replacement 9-649
Coolant Cooler Bracket Replacement 9-311
Coolant Cooler Inlet Hose Replacement 9-335
Coolant Cooler Outlet Hose Replacement 9-316, 9-317
Coolant Cooler Replacement 9-308
Coolant Flow Control Valve Replacement 9-318
Coolant Inlet Hose Replacement 9-321–9-323
Coolant Inlet Pipe Replacement 9-324, 9-325, 9-327
Coolant Level Sensor Replacement 9-274
Coolant Outlet Hose Replacement 9-328
Coolant Pump Replacement 9-315
Coolant Radiator Replacement 9-312
Cooling System Draining and Filling 9-257
Current Sensor Replacement 9-497
Interface Control Module Replacement 9-512
Positive and Negative Cable Replacement 9-504, 9-507
Positive High Voltage Contactor Relay Replacement 9-499
Radiator Inlet Hose Replacement 9-329, 9-331, 9-332
Radiator Outlet Hose Replacement 9-334
Replacement and Shipping Preparation 9-524
System Description 9-545
Drive Motor Battery Cover
Replacement 9-449
Drive Motor Battery High Voltage Manual Disconnect Lever
Replacement 9-445
Drive Motor Generator Battery High Voltage Manual Disconnect Connector
Replacement 9-447
Drive Motor Generator Control Module
Coolant Pump Replacement 9-291
Cooling Outlet Hose Replacement 9-292–9-294, 9-296
Radiator Inlet Hose Replacement 9-297
Drive Motor Generator Power Inverter Module
3 Phase Cable Inspection 16-25
Assembly Replacement 9-184
Cooling Outlet Hose Replacement 9-268
Cooling System Draining and Filling 9-264
Description and Operation 9-193
Programming and Setup 6-8
Drive Motor Housing
Installation 16-88
Removal 16-63
Drive Motor Power Inverter Module
3 Phase Cable Replacement 9-182
Drive or Reverse Gear 16-32

Driver Information Center
Description and Operation 8-100
Switch Malfunction - DTC B3567 8-86
Driver Information Display
Switch Replacement 8-93
Driver or Passenger Seat
Cushion Frame Replacement 13-11
Cushion Pad Replacement 13-13
Head Restraint Guide Replacement 13-10
Head Restraint Replacement 13-9
Inner Adjuster Front Finish Cover
Replacement 13-4
Outer Adjuster Front Finish Cover
Replacement 13-5
Recliner Handle Replacement 13-16
Replacement 13-3
Driver or Passenger Seat Adjuster
Handle Knob Replacement 13-7
Driver or Passenger Seat Back
Cover and Pad Replacement 13-14
Cushion Frame Replacement 13-15
Cushion Heater Replacement 13-32
Driver or Passenger Seat Retractor Side Belt
Replacement
Driver or Passenger Seat Retractor Side
Belt Replacement 12-171
Drivetrain and Front Suspension Frame
Front Support Replacement 3-78
Replacement 3-131
Stabilizer Bracket Replacement 3-131
Drivetrain Front and Electronic System Power Supply
Module Frame
Replacement 3-121
DTC B0012 or B0013 12-105
DTC B0014, B0021, B0031, or B0038 12-109
DTC B0015, B001A, B001B, or B0022 12-113
DTC B0016, B0018, B0023 or B0025 12-117
DTC B0017 or B0024 12-120
DTC B0019 or B0020 12-123
DTC B0052 12-127
DTC B0071 12-128
DTC B0074 12-130
DTC B0081 12-132
DTC B0082 12-85
DTC B0083-B0088 12-135
DTC B0091 12-139
DTC B0098 12-142
DTC B010E 12-39
DTC B0158 8-81
DTC B0163 10-88
DTC B0173, B0178, or B3933 10-90
DTC B0183 10-96
DTC B018A, B048C, B048F, or B1395 10-93
DTC B0193 10-98
DTC B0223, B0233, B023A, or B0408 10-101
DTC B0283 4-8
DTC B0468, B046B, or B046C 10-104
DTC B046A 10-107
DTC B0550 8-83
DTC B096F 4-78
DTC B097B 11-818
DTC B1000 11-27
DTC B1001 ..... 11-28, 12-144
DTC B1015 12-41
DTC B1019 12-145
DTC B101D 11-29
DTC B101E 11-30
DTC B1025, B1035, B1045, or B1055 8-8
DTC B124F 8-84
DTC B125A 8-10, 8-47
DTC B125B 8-12
DTC B125C 8-14, 8-34
DTC B1271 8-16
DTC B1325, B1330, B1517, C0800, C0899,
C0900, C12E1, C12E2, P0562, P0563, P1A0C,
P1A0D, or P1EFC 9-9
DTC B1370 11-821
DTC B1370-B1379, B1380-B1389,
or B1440-B1443 11-823
DTC B1395 4-80
DTC B1405 8-104
DTC B1445 11-827
DTC B1446 or B1447 8-17
DTC B144A 11-829
DTC B144B 11-831
DTC B1451 11-834
DTC B147E or B147F 11-836
DTC B1480 4-83
DTC B1516 9-11
DTC B151A 9-13
DTC B1527 9-14
DTC B1529 8-106
DTC B2455 8-19
DTC B2462 ..... 8-21, 8-39
DTC B2470 8-24
DTC B2476 or B2482 8-26
DTC B2540 4-85
DTC B2545 4-87
DTC B2570 4-89
DTC B2575 or B2699 4-91
DTC B257A 4-94
DTC B2580 4-96
DTC B2585 or B3867 4-98
DTC B2610 4-102
DTC B2615 4-105
DTC B2645 4-107
DTC B2652 4-109
DTC B2745 5-8
DTC B2750 4-57
DTC B2955 12-5
DTC B3006 ..... 3-5, 3-9
DTC B302A 12-7
DTC B3031 12-9
DTC B3055 12-10
DTC B305C 12-12
DTC B3060 12-13
DTC B3101 12-57
DTC B3105 12-59

DTC B3106 12-60
DTC B3109-B3113 12-61
DTC B310D-B310F 12-62
DTC B3122 12-63
DTC B3123 12-65
DTC B3125, B3130, or B3135 ..... 4-222, 4-226
DTC B3140 or B3150 ..... 4-229, 4-233
DTC B3588 4-111
DTC B3596 4-113
DTC B3600 4-115
DTC B3622 8-108
DTC B3650 4-117
DTC B370B 4-290, 4-312
DTC B3715 or B3875 4-294
DTC B3806 4-119
DTC B3811 ..... 4-298, 4-316
DTC B3873 ..... 4-301, 4-309
DTC B3881 or B3882 4-121
DTC B3883 4-125
DTC B3884 4-127
DTC B389A 12-14
DTC B3902 12-16
DTC B3935 12-17
DTC B3948 or B3949 4-129
DTC B3950 or B3951 4-133
DTC B3976 12-18
DTC B3984 12-19
DTC C0035-C0050, C1207-C1210, C1221-C1228, or C1232-C1235 5-10
DTC C005A 5-14
DTC C0110, C12E0, C12E8, or C12E9 5-15
DTC C012A, C128B, C128E, or C12B2-C12B4 5-17
DTC C012B or C12B6-C12B8 5-19
DTC C012D, C120A, C128A, C128D, C12BC, C12BD, or C12BE 5-21
DTC C012E or C12FE 5-23
DTC C012F, C12A7, or C12DD 5-25
DTC C0161 5-27
DTC C0176 14-5
DTC C0186, C0187, C0196, or C0287 5-29
DTC C0201 5-31
DTC C0242 or P0856 5-33
DTC C0245, C122E 5-34
DTC C0256, C12E6, or C12E7 5-36
DTC C0267 5-135
DTC C0277 or C0890 4-137
DTC C027D 5-224
DTC C028A, C028B, or C028F 5-222
DTC C028E 5-225
DTC C0293 5-227
DTC C0294, C120C, or C12F8 5-38
DTC C0297 4-140
DTC C0298 5-230
DTC C0299 or C12FF 5-42
DTC C029C, C120C, C129A-C129F, C12B1, or C12F8 5-44
DTC C0460 14-7
DTC C0475 14-8
DTC C0545 14-9
DTC C0552 or C121D 5-48
DTC C0558 5-233
DTC C0561 ..... 5-50, 5-235
DTC C0569 15-38
DTC C056D 5-236, 11-31
DTC C056D, C127A-C127C, C12E9, C12F2-C12F6, or C12FE 5-52
DTC C056E 5-54, 5-238, 11-32
DTC C0574 ..... 5-55, 5-240
DTC C0710 5-56
DTC C0750, C0755, C0760, or C0765 15-39
DTC C0775 15-41
DTC C0847, C0848, C1240 or C1241 11-840
DTC C0857 or C1242 11-842
DTC C0870 or C12E4 5-58
DTC C0880, C12E5, or C120F 5-59
DTC C0898 5-61
DTC C1120 or C1121 5-63
DTC C1122 or C1123 5-65
DTC C1124 or C1125 5-67
DTC C1280 or C1281 5-242
DTC P0071-P0073 10-109
DTC P0480 9-205
DTC P0513 12-20
DTC P0532 or P0533 10-112
DTC P0534 10-114
DTC P0572 or P0573 9-40
DTC P0575 9-42
DTC P059F or P151E 3-49, 3-51
DTC P0601-P0604, P0606, or P062F 9-65, 11-33
DTC P0601-P0604, P0606, P062F, P0630, P16F3, or P262B 9-67
DTC P061A or P061B 9-69
DTC P0633 12-21
DTC P0641, P0697, or P06A3 9-70
DTC P0650, P263A, or P263B 9-72
DTC P06AF 9-74
DTC P06B1, P06B2, P06E7, or P06E8 9-76
DTC P06E4 11-35
DTC P0703 9-43
DTC P0711-P0713 16-18
DTC P0A0C or P0A0D 9-373
DTC P0A1B 9-77
DTC P0A1F, P1A01, P1A05, or P1A06 11-38
DTC P0A3F, P0A40, P0C52, P0C53, P0C5C, P0C5D, or P1B03 9-78
DTC P0A5E, P0A61, or P0A64 9-82
DTC P0A78 9-83
DTC P0A7E 9-207
DTC P0A7F 9-376
DTC P0A8D 9-85
DTC P0A9C-P0A9E, P0AC6-P0ACD, P0AE9-P0AEB, P0BC3-P0BC5, or P0C34-P0C36 9-209
DTC P0AA1, P0AA4, P0AD9, P0ADD, P0AE2, P0AE4, P0D0A, P0D11, P1EBC, P1EBE-P1EC0, or P1EC3-P1EC5 9-378

DTC P0AA6, P0DAA, P1AE6, or P1F0E 9-392
DTC P0ABB, P0ABC, or P0ABD 9-395
DTC P0AC4 9-86
DTC P0AEE, P0AEF, P0AF0, P0BD2-P0BD4, or P0BDC-P0BDE 9-87
DTC P0AF8 ..... 9-398, 10-121
DTC P0AFA or P0AFB 9-401
DTC P0B01, P0B04, or P0B07 9-89
DTC P0B0D 9-91
DTC P0B10, P0B11, or P0B13 9-405
DTC P0B3B-P0BBB, P1B16-P1B2D, P1B45-P1BFE, P1E01-P1E06, or P1E4C-P1E8B 9-408
DTC P0BE6-P0BE8, P0BEA-P0BEC, P0BEE, P0BEF, or P0BF0 9-92
DTC P0BFD 9-93
DTC P0C01 9-95
DTC P0C0B or P0C0E 9-97
DTC P0C11-P0C13 9-98
DTC P0C17 or P1B0F 9-100
DTC P0C19 9-103
DTC P0C28 9-104
DTC P0C43-P0C45 9-212
DTC P0C47, P0C4A, P1E8C, or P1E8D 9-215
DTC P0C4E 9-105
DTC P0C76 9-107
DTC P0C77 or P0C78 9-412
DTC P0CCC, P0CCE, or P0CCF 4-236, 4-238
DTC P0CD6-P0CD8 9-219
DTC P0CE2, P0CE3, P1EC7, P1EC8, or P1F56 9-222
DTC P0CE5-P0CE7 and P1F58 9-225
DTC P0CEF-P0CF1 9-231
DTC P0CF4-P0CF6 9-558
DTC P0CF9 or P0D01 9-561
DTC P0D1F 9-563
DTC P0D21-P0D23 9-564
DTC P0D2B or P0D2C 9-567
DTC P0D39-P0D3B, P0D49, P0D4E, P0D4F, P0D53, P0D54, P1ECB-P1ECD, P1ED0-P1ED2, P1ED6-P1ED9, P1EDB, P1EDC, P1EDE-P1EE1, P1EE3, P1EE5, P1EE7-P1EED, P1EFE-P1F02, or P1F14-P1F16 9-570
DTC P0D3E or P0D3F 9-572
DTC P0D40, P1EDA, P1EDD, or P1F03 9-575
DTC P0D43-P0D45 9-576
DTC P0D57-P0D59 9-578
DTC P0D5B, P0D5C, P1ECE, or P1EFD 9-581
DTC P0D5E 9-583
DTC P0D69-P0D7F 10-117
DTC P150D or P150E 9-108
DTC P151C or P2516-P2518 10-123
DTC P15B9 or P15BA 11-844
DTC P15F1 9-110
DTC P15FB 9-111
DTC P15FC 9-112
DTC P162B 12-22
DTC P1631 12-23
DTC P1649 12-24
DTC P16B7 11-39
DTC P16B8-P16BA 11-41
DTC P16C1-P16C5 11-42
DTC P16C6 11-43
DTC P16F2 9-113
DTC P16F3 9-115
DTC P16F4 9-116
DTC P16F6 9-118
DTC P179A 9-119
DTC P181C-P181F, P183A-P183E, P184A, or P184B 9-120
DTC P1824, P182A-P182F, P1838, or P1839 16-21
DTC P183F 9-123
DTC P1A07, P1E93, P1E99, P1E9F, P1EA5, P1FC3-P1FC8, P3035, or P3040 9-416
DTC P1A4F, P1A50, P1A51, P1ADC, or P1EB6 9-124
DTC P1A56 9-125
DTC P1A5E or P1A5F 11-846
DTC P1A60 11-848
DTC P1ADE or P1ADF 9-126
DTC P1AE8 or P1AE9 9-127
DTC P1AEC or P1AEE 9-128
DTC P1AF0 9-130
DTC P1AF4 or P1AF5 9-131
DTC P1B0B or P1B0C 9-132
DTC P1B0D 9-133
DTC P1B0F 9-134
DTC P1B12 5-69
DTC P1B15 9-137
DTC P1B41 9-138
DTC P1BFF, P1E23-P1E25, or P1EB8 9-139
DTC P1E00 9-140
DTC P1E0A 9-141
DTC P1E19 or P1E1A 9-142
DTC P1E1B-P1E1F 9-143
DTC P1E20-P1E22 9-145
DTC P1E27 or P1E28 9-146
DTC P1E29 9-147
DTC P1E2A-P1E2F 9-148
DTC P1E34-P1E36 9-149
DTC P1E37 9-150
DTC P1E38 9-151
DTC P1E39 9-152
DTC P1E3A 9-154
DTC P1E4A 9-155
DTC P1E8E-P1E91 or P1F06 11-45
DTC P1E92, P1E98, P1E9E, P1EA4, P1FC9, P1FCA-P1FCE, P3036, or P3041 9-418
DTC P1E94-P1E97 or P1F07 11-46
DTC P1E9A-P1E9D or P1F08 11-47
DTC P1EA0-P1EA3 or P1F09 11-48
DTC P1EAB-P1EB0 9-420
DTC P1EB1 11-49
DTC P1EB2-P1EB5, P1FA6-P1FAB, P3030, or P303B 11-50
DTC P1EB9 11-52

DTC P1EC1 or P1EC2 11-55
DTC P1ECA or P1EC9 10-126
DTC P1EE6 9-589
DTC P1EEF or P0D4A 9-592
DTC P1EF0 or P1EF1 9-594
DTC P1EF3-P1EF5 9-596
DTC P1EF6 or P1EF7 11-850
DTC P1EF8 11-57
DTC P1EFA or P1EFB 9-597
DTC P1F0A-P1F0D 10-128
DTC P1F17 9-427
DTC P1F59, P1F5A, or P1F5B 9-156
DTC P1F5D or P1F5E 9-159
DTC P1FAC, P1FB1, P1FB7, P1FBD, or P1FCF 11-59
DTC P1FAD, P1FB3, P1FB9, P1FBF, or P1FD1 11-60
DTC P1FAE, P1FB4, P1FBA, P1FC0, or P1FD2 11-61
DTC P1FAF, P1FB5, P1FBB, P1FC1, or P1FD3 11-62
DTC P1FB0, P1FB6, P1FBC, P1FC2, or P1FD4 11-63
DTC P1FB2, P1FB8, P1FBE, P1FD0, or P1FF3 11-64
DTC P1FD5-P1FF2 9-424
DTC P1FF4 9-429
DTC P1FFB-P1FFE 9-238
DTC P1FFF 9-240, 9-599
DTC P2122, P2123, P2127, P2128, or P2138 9-161
DTC P215B 16-24
DTC P2534 or P2535 11-852
DTC P2537 ..... 9-165, 11-854
DTC P257D-P257F 3-7
DTC P270A 16-100
DTC P2797 9-167
DTC P3002, P3003, P301F, or P3020 9-600
DTC P3005, P3006, P3021, or P3022 9-604
DTC P3008, P3009, or P3023 9-608
DTC P300B 9-611
DTC P300C, P300D, or P300F 9-614
DTC P3010, P3013, or P3014 9-616
DTC P3015, P3018, or P301B-P301E 9-618
DTC P301E 9-622
DTC P302A-P302D 9-625
DTC P302F 9-627
DTC P3031-P3034 or P3037 11-65
DTC P303C-P303F or P3042 11-66
DTC U0020 11-67
DTC U0073 or U2100 11-68
DTC U0074 11-69
DTC U0077 11-74
DTC U0078 11-80
DTC U007A 11-75
DTC U0100-U02FF 11-81
DTC U0300-U0336 11-86
DTC U0400-U05FF 11-87
DTC U1500-U15FF 11-88
DTC U179A 11-91
DTC U1803 11-94
DTC U1806 11-97
DTC U1807 11-98
DTC U180A 11-99
DTC U180B 11-100
DTC U180C 11-101
DTC U180D 11-102
DTC U1814 11-103
DTC U1817 11-105
DTC U1818 11-108
DTC U182D 11-111
DTC U182E 11-114
DTC U1833 11-117
DTC U1838 11-120
DTC U1839 11-123
DTC U183C 11-126
DTC U183E 11-129
DTC U1845 or U1846 11-132
DTC U184A 11-134
DTC U184B 11-137
DTC U184C 11-140
DTC U184D 11-143
DTC U184E 11-146
DTC U1858 11-149
DTC U185A 11-152
DTC U185B 11-157
DTC U185C 11-161
DTC U1860 11-164
DTC U1861 11-167
DTC U186A 11-170
DTC U186B 11-173
DTC U1876 11-176
DTC U1885 11-179
DTC U18A4 11-183
DTC U18B9-U18BF 11-186
DTC U2099 11-187
DTC U2401 11-189
DTC U2602 11-192
DTC U2603-U2606 or U2617-U2622 11-196
DTC U2608 11-198
DTC U2609 11-201
DTC U2611 11-204
DTC U2612 11-206
DTC U2613 11-209
DTC U2615 11-212
DTC U2623 or U2624 11-215
Dual Phase Steel 3-115
Dust Leaks 1-84

E

EL-48571 High Voltage Battery Pin Out Box Reference 9-368
Electric Differential Drive Motor Power Inverter Module Cooling Hose Replacement 9-270
Electrical Center Identification Views 11-430
Electrical Schematic Symbols 11-298
Electromagnetic Compatibility Description 9-196

Electronic Brake and Traction Control Module Bracket
Replacement 5-74
Electronic Brake Control Module
Programming and Setup 6-9
Replacement 5-75
Scan Tool Information 6-36
Electronic Component Description 16-93
Electronic Park Brake
Control Module Programming and Setup 6-9
Control Module Scan Tool Information 6-39
Electronic Park Lock Description and Operation 11-958
Electronic Parking Brake
Control Module Description 5-268
Control Module Replacement 5-247
Electronic Power Steering Motor Control Module
Replacement 14-17
Electronic Vibration Analyzer (EVA)
Description and Operation 1-73
Emblem/Nameplate Replacement 2-3
Engine Control Module
Bracket Replacement 9-172
Replacement 9-171
Engine Control Module (ECM)
Description and Operation 9-194
Engine Coolant
Temperature Sensor Replacement - Heater Coolant Heater 10-76
Temperature Sensor Replacement - Radiator Side 9-285
Environmental Fallout (Acid Rain) 3-142
Evaporator
Temperature Sensor Replacement 10-140
Exterior Lighting Systems
Description and Operation 4-198

F

Fastener Tightening Specifications 9-53, 9-199, 9-347
12V Starting and Charging 9-7
ABS 5-5
Automatic Transmission 16-4
Bolted Exterior Body Panels and Closures 3-3
Bumpers and Fascias 3-47
Disc Brakes 5-96
Displays and Gauges 8-76
Entertainment System 8-3
Exterior Trim 2-3
Fixed and Moveable Windows 4-5
Frame and Underbody 3-118
Front Suspension 15-3
Horns 4-55
HVAC Systems 10-3
Hydraulic Brakes 5-133
Immobilizer 12-3
Instrument Panel and Console Trim 2-22
Interior Trim 2-50
Lighting Systems 4-66
Fastener Tightening Specifications (cont'd)
Mirrors 4-202
Park Brake 5-220
Power Steering System 14-3
Rear Suspension 15-19
Remote Functions 12-54
Seat Belts 12-81
SIR 12-100
Steering Wheel and Column 14-24
Tire Pressure Monitoring 15-37
Tires and Wheels 15-48
Transmission Cooling 16-105
Vehicle Access 4-218
Wheel Alignment 15-63
Wheel Drive Shafts 7-3
Wiper and Washer System 4-286
Wiring Systems and Power Management 11-251
Fasteners 1-16
FCI Connectors 11-916, 11-917
FEP Connectors 11-918
Fixed Antenna
Replacement 8-60
Flat Wire Repairs 11-887
Floor Carpet Drying 2-18
Floor Panel
Carpet Replacement 2-19
Floor Panel Number 6 Cross Bar
Replacement 3-109
Fluid and Lubricant Recommendations 1-32
Fluid Leak Diagnosis 16-30
Fluid Pump
Assemble 16-77
Cleaning and Inspection 16-76
Disassemble 16-74
Fluid Temperature Sensor
Replacement 16-41
Flushing 10-19
Folded-Over Wire Repair 11-887
Front and Rear Row Seat Roof Rail Airbag
Replacement 12-163
Front and Rear Side Door Outside Handle Rod Clip
Replacement 4-263
Front Brake
Shield Replacement 5-125
Front Bumper
Lower Shutter Actuator Replacement 3-60
Lower Shutter Replacement 3-59
Front Bumper Fascia
Emblem/Nameplate Replacement 2-11
Energy Absorber Replacement 3-54
Opening Cover Replacement 3-61
Replacement 3-57
Side Bracket Replacement 3-58
Front Bumper Fascia Air Deflector
Replacement 3-62
Front Bumper Impact Bar Fog Lamp Access Hole Cover
Replacement 2-10

Front Bumper Lower Impact Bar
Replacement 3-56
Front Compartment
Air Deflector Replacement 3-125
Front Sight Shield Replacement 3-39
Side Rail Bracket Replacement 3-80
Upper Side Rail Replacement 3-83
Front Differential Carrier
Installation 16-85
Removal 16-66
Front End Inflatable Restraint
Discriminating Sensor Replacement 12-154
Front Fender
Insulator Replacement 3-31
Replacement - Left Side 3-17
Replacement - Right Side 3-18
Front Floor Console
Center Compartment Liner Replacement 2-47
Compartment Liner Replacement 2-46
Cup Holder Liner Replacement 2-44
Front Compartment Replacement 2-43
Front Cover Replacement 2-49
Rear Cup Holder Liner Replacement 2-45
Replacement 2-48
Front Heated Seat
Malfunction 13-29
Front Hinge Pillar
Body Sectioning 3-85
Front Lower Control Arm
Bushing Replacement - Rear 15-11
Front Lower Grille
Replacement 2-14
Front of Vehicle/Engine Compartment
Component Views 11-374
Front Seat
Outboard Seat Back Airbag
Replacement 12-164
Front Seat Adjuster
Replacement 13-6
Front Seat Belt
Anchor Plate Tensioner Replacement 12-170
Buckle Replacement 12-94
Guide Adjuster Replacement 12-96
Front Seat Cushion
Cover and Pad Replacement 13-12
Heater Replacement 13-33
Front Seat Heater
Switch Replacement 13-31
Front Seat Heater Switch Bezel
Replacement 2-42
Front Side Door
Adjustment 3-12
Check Link Replacement 3-34
Hinge Replacement 3-25
Inside Handle Rod Replacement 4-261
Replacement 3-13
Stationary Window Replacement 4-39
Trim Panel Applique Replacement 2-54
Trim Replacement 2-53
Front Side Door (cont'd)
Upper Trim Panel Replacement 2-52
Weatherstrip Replacement - Body Side 3-42
Weatherstrip Replacement - Door Side 3-41
Wiring Harness Replacement 3-21
Front Side Door Armrest Switch Mount Plate
Replacement 2-51
Front Side Door Lock
Cylinder Replacement 4-257
Replacement 4-268
Striker Adjustment 4-278
Striker Replacement 4-278
Front Side Door Lock Cylinder
Rod Replacement 4-271
Front Side Door Locking Rod
Replacement 4-270
Front Side Door Sill Garnish Molding
Replacement 2-57
Front Side Door Window
Inner Sealing Strip Replacement 4-46
Outer Sealing Strip Replacement 4-45
Regulator Replacement 4-43
Switch Replacement - Left Side 4-41
Switch Replacement - Right Side 4-40
Weatherstrip Replacement 4-49
Window Replacement 4-31
Front Side Door Window Channel
Replacement 4-37
Front Side Door Window Frame
Front Applique Replacement 2-7
Rear Applique Replacement 2-8
Front Suspension
Description and Operation 15-17
Front Turn Signal Lamp Bulb
Replacement 4-187, 4-188
Front Upper Grille
Replacement 2-13
Front Wheel Drive Shaft
Inner Joint and Boot Replacement 7-10
Oil Seal Installation - Left Side 16-79
Oil Seal Installation - Right Side 16-80
Oil Seal Removal - Left Side 16-72
Oil Seal Removal - Right Side 16-71
Outer Joint and Boot Replacement 7-13
Replacement - Left Side 7-4
Replacement - Right Side 7-7
Seal Replacement - Left Side 16-44
Seal Replacement - Right Side 16-45
Front Wheelhouse
Liner Replacement - Left Side 3-139
Liner Replacement - Right Side 3-138
Front Wheelhouse Panel
Replacement 3-82
Fuel Economy Indicator Switch
Replacement 8-98
Full-Cut Method Description 4-51

G

General Electrical Diagnosis 11-871
General Plastic Repair 3-144
Generator Control Module
Coolant Hose Replacement 9-298
GM Oil Life System Resetting 1-33
GMLAN and Media Oriented Systems
Transport (MOST) Wiring Repairs 11-952
Graphics/Decals/Emblems 2-3
Ground Repair 11-954
Ground Views 11-411

H

Handling of Refrigerant Lines and Fittings 10-4
Harness Routing Views 11-252
Hazard Lamps
Malfunction 4-148
Hazard Warning Switch Replacement 4-173
Headlamp Bracket
Replacement 4-181, 4-182
Headlamps
Aiming 4-183, 4-184
Bulb Replacement 4-179, 4-180
Malfunction 4-150
Replacement 4-178
Headliner
Harness Replacement 2-21
Headlining Trim Panel
Replacement 2-20
Heated Mirrors
Malfunction 4-204
Heated Oxygen Sensor
Wiring Repairs 11-890
Heated Seats
Description and Operation 13-34
Heater
Core Replacement 10-73
Heater and Air Conditioning
System Description and Operation 10-77
Heater and Air Conditioning Evaporator and Blower
Lower Case Replacement 10-47
Module Replacement 10-43
Upper Case Replacement 10-46
Heater Coolant
Heater Draining and Filling 10-21
Heater Replacement 10-74
Heater Coolant Heater Bracket
Replacement 10-75
Heater Coolant Pump
Replacement 10-56
Heater Inlet and Outlet Pipe Replacement 10-53
Heater Inlet Hose
Replacement 10-50
Heater Outlet Hose
Replacement 10-54
Heating
Performance Diagnostic 10-8
High Effort While Tilting Column 14-24
High Mount Stop Lamp
Replacement 4-189
High Strength Low Alloy Steel 3-116
High Temperature Wiring Repairs 11-889
High Voltage
Battery Disconnect Cable Replacement 9-458
Disabling 9-363
Enabling 9-367
Safety 9-362
System Inspection 9-441
High Voltage Battery Disconnect Control Module
Module
Replacement 9-175, 9-179
High Voltage Disconnect Circuit Connector Cover
Replacement 9-174
High Voltage Monitoring Systems
Description 9-196
Hill Start Assist Malfunction 5-70
Hood
Adjustment 3-29
Replacement 3-30
Hood Ajar Indicator
Description and Operation 3-46
Lamp Switch Replacement 12-31
Hood Ajar Indicator/Message
Malfunction 3-5, 3-9
Hood Hinge
Replacement 3-26
Hood Hold-Open Rod
Replacement 3-36
Hood Insulator
Replacement 3-32
Hood Primary and Secondary Latch
Replacement 3-33
Hood Primary Latch
Release Cable Handle Replacement 3-24
Release Cable Replacement 3-11
Hood Rear Weatherstrip
Replacement 3-37
Horn
Malfunction 4-59
Replacement 4-62
System Description and Operation 4-64
How to Identify Plastic Parts 3-144
How to Use Electrical Schematics 11-272
Hub/Axle Flange and Wheel Stud
Runout Inspection 1-57
Hub/Wheel Bearing Replacement 15-5
HVAC Component Replacement
Reference 10-87
HVAC Control
Assembly Replacement - Auxiliary 10-135
HVAC System Control Module
Programming and Setup 6-11
HVAC System Malfunction 10-130
Hybrid Battery
Interface Control Module Programming and
Setup 6-11
Pack Coolant Passage Leak Test 9-257

Hybrid Controls
Electronic Component Views 9-64
Hybrid Cooling System
Description and Operation 9-343
Leak Test 9-256
Loss of Coolant 9-253, 9-254
Pressure Cap Testing 9-256
Hybrid Modes of Operation Description 9-197
Hybrid Powertrain Control Module 2
Programming and Setup 6-12
Replacement 11-236
Scan Tool Information 6-61
Hybrid Powertrain Control Module Scan Tool
Information 6-54
Hybrid/EV Battery
Cell Balancing 9-541
System Verification 9-543
Hybrid/EV Battery Pack
Capacity Learn 9-541
Coolant Control Solenoid Valve Learn 9-343
Coolant Heater Malfunction 9-251
Coolant Heater Malfunction - DTC
P1EC6 9-235
Coolant Pump Malfunction 9-246
Hybrid/EV Battery Voltage Present 9-437
Hybrid/EV Electronics Coolant Pump
Malfunction 9-248
DTC P0CE9, P0CEA, P1F44, or P1F45 9-228
Hybrid/EV Electronics Cooling Diagnostic 9-241
Hybrid/EV System High Voltage Isolation
Description 9-545
Hydraulic Brake
Component Operation Visual Inspection 5-163
System Bleeding 5-211, 5-212
System Description and Operation 5-218
System Flushing 5-213

I

Ignition and Start
Switch Replacement 11-957
Ignition Can/Cannot Be Turned Off with
Transmission in Any Gear 11-856
Ignition Lock Key Transmitter Antenna
Bracket Replacement 12-75
Replacement - Floor Console 12-73
Replacement - Rear Compartment 12-74
Immobilizer
Control Module Programming and Setup 6-13
Description and Operation 12-32
Impact Bar
Replacement - Front Bumper 3-55
Increase in Effort While Turning Steering
Wheel 14-11
Indicator/Warning Message
Description and Operation 8-100
Inducing Intermittent Fault Conditions 11-879
Inflatable Restraint
Front Passenger Presence Module
Replacement 12-162
Inflatable Restraint (cont'd)
Front Side Door Side Impact Sensor
Replacement 12-168
Instrument Panel Compartment Module
Disable Switch Replacement 12-169
Passenger Presence System Scan Tool
Information 6-73
Sensing and Diagnostic Module Scan Tool
Information 6-74
Inflatable Restraint Module Handling and
Scrapping 12-173
Inflatable Restraint Sensing and Diagnostic Module
Programming and Setup 6-13
Information Center Telltale Assembly
Replacement 8-94
Inline Harness Connector End Views 11-761
Inside Air Moisture and Windshield
Temperature Sensor Replacement 10-143
Inside Air Temperature Sensor
Replacement - Left Side Lower 10-141
Replacement - Right Side Upper 10-142
Inside Rearview Mirror
Replacement 4-215
Wiring Harness Cover Replacement 4-216
Inspection/Maintenance (I/M)
System Check 6-123
Instrument Cluster
Description and Operation 8-101
Display Malfunction 8-88
Gauges Malfunction 8-87
Programming and Setup 6-14
Rear Cover Replacement 8-96
Replacement 8-95
Scan Tool Information 6-77
Instrument Panel
Airbag Replacement 12-159
Center Support Bracket Replacement 2-39
Center Trim Plate Applique Replacement 2-25
Fuse Block Access Hole Cover
Replacement 2-27
Knee Bolster Replacement 2-22
Lower Airbag Bracket Replacement 12-153
Lower Airbag Replacement -
Driver Side 12-160
Lower Airbag Replacement -
Passenger Side 12-161
Outer Trim Cover Replacement 2-28
Tie Bar Replacement 2-40
Trim Pad Radio Speaker Opening Cover
Replacement 2-38
Trim Pad Replacement 2-31
Upper Molding Retainer Replacement 2-26
Instrument Panel Center Air Outlet
Duct Replacement 10-66
Replacement 10-64
Instrument Panel Compartment
Door Latch Replacement 2-30
Door Latch Striker Replacement 2-31
Replacement 2-29

Instrument Panel Outer Air Outlet
Replacement - Left Side 10-63
Replacement - Right Side 10-65
Instrument Panel Trim Plate
Applique Replacement - Left Side 2-24
Applique Replacement - Right Side 2-23
Instrument Panel/Center Console
Component Views 11-382
Interior Backlighting
Malfunction 4-156
Interior Lighting System
Description and Operation 4-200
Intermediate Steering Shaft
Replacement 14-28
Intermediate Steering Shaft Boot Replacement
Steering 14-26
Intermediate Steering Shaft Inner Boot
Replacement 14-27

J

JST Connectors 11-919

K

K20 Engine Control Module
Programming and Setup 6-10
Scan Tool Information 6-40
Key with Integrated Transmitter
Programming 12-28
Keyless Entry
System Description and Operation 12-79
System Malfunction 12-69
Keyless Entry Control Module
Programming and Setup 6-14
Replacement 12-76
Scan Tool Information 6-78
Keyless Entry Control Module Bracket
Replacement 12-77
Kostal Connectors 11-921, 11-923

L

Lead/Pull Description 15-65
Leaf Button Malfunction 8-89
Leak Testing 10-4
Liftgate
Adjustment 3-19
Emblem/Nameplate Replacement 2-4
Hinge Replacement 3-27
Latch Replacement 4-265
Latch Striker Replacement 4-279
Liftgate Wiring Harness Replacement 3-22
Lock Cylinder Replacement 4-259
Outside Handle Emblem Replacement 2-12
Outside Handle Replacement 4-264
Replacement 3-20
Sill Garnish Molding Replacement 2-69
Strut Replacement 3-40
Trim Finish Panel Replacement 2-70
Weatherstrip Replacement 3-43
Liftgate Window
Replacement 4-32
Lifting and Jacking the Vehicle 1-27
Lock Cylinder Coding
Front Side Door 1-22, 1-24
Ignition 1-25
Rear Compartment Lid 1-26
Lock Replacement
Rear Door 4-269
Looseness in Steering Column 14-25
Loss of Isolation on the High Voltage
Main Bus 9-430
Low Tire Pressure Indicator
Malfunction 15-42
Lubrication
Description 16-95
Luggage Compartment/Rear of Vehicle
Component Views 11-401

M

Main Shaft
Installation 16-87
Removal 16-64
Maintenance Items 1-32
Maintenance Replacement Parts 1-32
Maintenance Schedule 1-33
Manual Shift Shaft
Position Switch Installation 16-82
Position Switch Removal 16-68
Seal Installation 16-83
Seal Removal 16-69
Master Cylinder
Fluid Level Sensor Replacement 5-173
Replacement 5-168
Reservoir Filling 5-165
Reservoir Replacement 5-165
Master Electrical Component List 11-343
Master Electrical Schematic Icons 11-313
Measuring Frequency 11-875
Measuring Voltage 11-875
Measuring Voltage Drop 11-875
Memory Steer 15-31
Description 15-65
Mild Steel 3-116
Mobile Telephone
Microphone Replacement 8-53
Mode Control Cam Actuator
Replacement 10-138
Mode Valve
Link Replacement 10-137
Molex Connectors 11-925, 11-927
Motor Control
Module 1 Scan Tool Information 6-78
Mounting and Hardware
Inspection - Front 5-101
Inspection - Rear 5-102
Multimedia Receptacle
Replacement 8-58

N

No Drive in All Ranges 16-33
No Global Positioning System (GPS) Reception 8-21, 8-39
No Park or Drive 16-32
No Remote Detected 12-67
No Reverse 16-33
Noise
  Click in Turns 7-3
  Clunk When Accelerating During Turns 7-4
  Clunk When Accelerating from Coast 7-3
  Exterior Windnoise 1-31
  In Steering Column 14-24
  Interior Windnoise 1-31
  No (or Noisy) OnStar Audio 8-37
  Rattle, Clunk or Shudder 14-10
  Whine or Growl 14-10
  Whine/Growl Noise That Changes with Vehicle Speed 16-32
Noise and Vibration Analysis 16-32
Noise Diagnosis
  Blower Motor 10-10
  Front Suspension 15-32
  HVAC Module 10-12
  Rear Suspension 15-33

O

Object Alarm Module
  Programming and Setup 6-15
  Scan Tool Information 6-79
Object Detection
  Description and Operation 12-52, 12-53
Odor Correction 10-17
Odor Diagnosis 10-13
Odors
  Eliminating Unwanted Odors in Vehicles 2-18
OnStar
  Button LED Inoperative 8-42
  Call Center Remote Function Requests Inoperative 8-44
  Description and Operation 8-63
  Microphone Inoperative - Caller Cannot Be Heard 8-36
  One or More Buttons Inoperative 8-45
  Steering Wheel Control Functions Malfunction 8-47
  Stolen Vehicle Slowdown Active 12-25
  Voice Recognition Inoperative 8-52
Oscilloscope Diagnostic Kit Description and Operation 1-75
Output Shaft
  Installation 16-90
  Removal 16-61
Outside Mirror
  Description and Operation 4-216
Outside Rearview Mirror
  Glass Replacement 4-213
  Housing Cover Replacement 4-210, 4-211
Outside Rearview Mirror (cont'd)
  Inner Actuator Replacement 4-213
  Remote Control Switch Replacement 4-212
  Replacement 4-209

P

P-Metric Sized Tires Description 15-60
Paint Gauges 3-143
Park Brake
  Adjustment 5-267
  Cable Automatic Adjuster Disabling 5-264
  Cable Automatic Adjuster Enabling 5-264
  Cable Replacement - Left Rear 5-256
  Cable Replacement - Rear 5-254
  Cable Replacement - Right Rear 5-258
  Description and Operation 5-269
  Hardware Inspection 5-247
  Shoe Replacement 5-249
  System Diagnosis 5-245
  Will Not Hold or Release 5-245
Park Pawl
  Installation 16-86
  Removal 16-65
Park, License, and/or Tail Lamps
  Malfunction 4-160
Parking Assist
  System Malfunction 12-42
Parking Brake
  Actuator Switch Replacement 5-265
Passenger Compartment
  Air Filter Replacement 10-57
Passenger Compartment/Roof Component Views 11-388
Passenger Presence System
  Programming and Setup 6-15
  Rezeroing Procedure 12-147
Passenger Seat Belt
  Front Passenger Presence Sensor Replacement 12-92
Pedestrian Alert System Malfunction 12-44
Pedestrian Sound Alert Module
  Replacement 12-48
Pedestrian Sound Alert Speaker
  Replacement 12-49
Plastic Identification and Refinishing Systems 3-145
Plenum Front Panel
  Replacement 3-38
Plug-In Charging
  Indicator Malfunction 9-644
  Malfunction 9-634, 9-639
  System Description and Operation 9-657
Power Door Lock
  Description and Operation 4-283
  Key Cylinder Switches Malfunction 4-242
  Malfunction 4-244
Power Mirror
  Malfunction 4-206

Power Mode
Description and Operation 11-958
Mismatch 11-857
Power Outlet
Description and Operation 11-250
Receptacle Malfunction 11-246
Power Steering
Gear Replacement 14-18
Power Steering Control Module
Programming and Setup 6-15
Scan Tool Information 6-79
Power Steering System
Description and Operation 14-22
Power Windows
Description and Operation 4-51
Malfunction 4-13, 4-18
Powertrain
Component Views 11-380
Powertrain Diagnostic Trouble Code (DTC)
Type Definitions 6-92
Pretensioner Handling and Scrapping 12-179
Probing Electrical Connectors 11-872

Q

Quarter Inner Panel
Replacement 3-108
Quarter Outer Panel
Sectioning 3-105
Quarter Window
Trim Finish Panel Replacement 2-64

R

Rack and Pinion
Boot Replacement - On Vehicle 14-15
Radiator
Air Lower Baffle and Deflector
Replacement 9-301
Air Upper Baffle and Deflector
Replacement 9-302, 9-303
Lower Bracket Replacement 9-287
Overflow Hose Replacement 9-282
Upper Bracket Replacement 9-289
Radiator Grille
Guard Replacement 9-300
Radiator Lower Insulator
Replacement 9-288
Radiator Surge Tank
Clamp Bracket Replacement 9-279, 9-280
Replacement 9-276–9-278
Support Bracket Replacement 9-281
Radiator Upper Insulator
Replacement 9-290
Radio
Poor Reception 8-10, 8-47
Programming and Setup 6-16
Replacement 8-57
Scan Tool Information 6-80
Radio Antenna
Base Replacement 8-59
Radio Control
Switch Replacement 8-63
Radio Front Speaker
Replacement 8-61
Radio/Audio System
Description and Operation 8-69
Rail Dust Damage Repair 3-143
Range Selector
Lever Cable Adjustment 16-37
Lever Cable Bracket Replacement 16-38
Lever Cable Replacement 16-36
Re-Calibrating Actuators 10-133
Rear Axle
Replacement 15-24
Rear Brake
Front Pipe Replacement 5-202, 5-205
Hose Replacement 5-209
Rear Brake Intermediate Number 1 Pipe
Replacement 5-194
Rear Brake Intermediate Number 2 Pipe
Replacement 5-196
Rear Brake Pipe
Replacement 5-199
Rear Bumper
Impact Bar Replacement 3-66
Rear Bumper Fascia
Bracket Replacement - Side 3-64
Replacement 3-63
Rear Bumper Lower Fascia
Replacement 3-65
Rear Coil Spring
Replacement 15-23
Rear Compartment
Courtesy Lamp Replacement 4-198
Floor Panel Rail Replacement 3-92
Floor Panel Replacement 3-103
Stowage Shelf Replacement 2-67
Rear Compartment Lamp
Malfunction 4-163
Rear Door
Window Belt Inner Sealing Strip
Replacement 4-47
Rear End Panel
Replacement 3-112
Rear End Spoiler
Replacement 2-17
Rear Fog Lamps
Malfunction 4-146
Rear Hatch/Gate Description and
Operation 4-285
Rear Lamp Monitor Light Conductor Harness
Replacement 4-195
Rear License Plate Lamp
Replacement 4-191
Rear Object Alarm Control Module
Replacement 12-50

Rear Parking Assist Alarm
Sensor Replacement 12-51
Rear Parking Brake
Adjuster Replacement 5-260
Anchor Backing Plate Replacement 5-265
Rear Seat
Bolster Airbag Replacement 12-165
Rear Seat Back
Cushion Cover Replacement 13-26
Rear Seat Back Bolster
Replacement 13-19
Rear Seat Back Cushion
Removal and Installation 13-24, 13-25
Rear Seat Back Cushion Latch
Replacement 13-23
Rear Seat Belt
Retractor Replacement 12-97
Rear Seat Cup Holder
Replacement 2-56
Rear Seat Cushion
Cover and Pad Replacement 13-20
Removal and Installation 13-21
Rear Seat Head Restraint
Guide Replacement 13-18
Replacement 13-17
Rear Seat Latch Knob
Replacement 13-22
Rear Side Door
Adjustment 3-15
Check Link Replacement 3-35
Inside Handle Cable Replacement 4-257
Outside Handle Replacement 4-267
Outside Handle Rod Adjustment 4-276
Outside Handle Rod Replacement 4-277
Replacement 3-16
Upper Hinge and Lower Hinge
Replacement 3-28
Upper Rear Trim Panel Replacement 2-55
Weatherstrip Replacement - Body Side 3-45
Weatherstrip Replacement - Door Side 3-44
Window Switch Bezel Replacement 2-50
Rear Side Door Lock
Striker Adjustment 4-280
Striker Replacement 4-280
Rear Side Door Locking Rod
Replacement 4-274
Rear Side Door Locking Rod Bellcrank Rod
Replacement 4-275
Rear Side Door Sill Garnish Molding
Replacement 2-58
Rear Side Door Trim
Replacement 2-68
Rear Side Door Window
Replacement 4-32
Weatherstrip Replacement 4-50
Rear Side Door Window Channel
Replacement 4-38
Rear Side Door Window Frame
Front Applique Tape Replacement 2-9
Rear Side Door Window Switch
Replacement 4-42
Rear Side Door Wiring Harness
Replacement 3-23
Rear Suspension
Description and Operation 15-27
Rear Vision Camera
System Malfunction 12-46
Rear Washer
System Malfunction 4-298, 4-316
Rear Wheelhouse
Panel Liner Replacement 3-140
Rear Window
Panel Stowage Compartment Cover
Replacement 2-66
Wiper Blade Replacement 4-331
Rear Window Defogger
Description and Operation 4-53
Malfunction 4-10
Rear Window Washer Nozzle
Replacement 4-322
Rear Window Wiper Motor
Replacement 4-333
Rear Wiper
System Malfunction 4-290, 4-312
Receiver and Dehydrator
Replacement 10-39
Rechargeable Energy Storage System
Smoke Test 9-440
Reed Tachometer Description 1-81
Refrigerant
Recovery and Recharging 10-17
Registered and Non-Registered
Trademarks 1-20
Relay Replacement 11-953
Remote Control Door Lock
Receiver Programming and Setup 6-18
Receiver Replacement 12-78
Remote Control Replacement 10-134
Remote Vehicle Speed Limiting
Description and Operation 12-34
Remote Vehicle Start Malfunction 12-71
Repairing Connector Terminals 11-949
Repairing Damaged Wire Insulation 11-883
Repairs and Inspections Required After a
Collision 12-172
Retained Accessory Power
Description and Operation 11-962
Malfunction 11-863
Ride Diagnosis 15-28
Road Test Procedure 16-29
Rocker Inner Panel
Replacement 3-94
Rocker Outer Panel
Sectioning 3-100
Rocker Panel
Molding Replacement 2-15
Roof Front Header
Panel Replacement 3-90

Roof Outer Panel
Replacement 3-88
Roof Panel
Joint Finish Molding Replacement 2-16
Roof Rear Header
Panel Replacement 3-91
RPO Code List 1-13

S

Scan Tool Does Not Communicate with
Chassis High Speed GMLAN Device 11-219
High Speed GMLAN Device 11-224
Low Speed GMLAN Device 11-229
Scan Tool Does Not Power Up 11-218
Scan Tool Snapshot Procedure 11-881
Schematics
ABS 5-6
Active Grille Air Shutter 3-48
Audible Warnings 8-80
Automatic Transmission Controls 16-7
Body Control Systems 11-14
Cellular Telephone 8-7
Cigar Lighter/Power Outlet 11-245
Cruise Control 9-39
Data Communications 11-6
Defogger 4-7
Door Lock/Indicator 4-219
Driver Information System 8-78
Exterior Lamps 4-70
Fog Lamps 4-69
Ground Distribution 11-333
Headlamps/Daytime Running Lamps 4-67
Heated/Cooled Seat 13-28
Hood Latch 3-4
Horns 4-56
HVAC Systems - Automatic 10-81
Hybrid Controls 9-54
Hybrid/EV Cooling 9-201
Hybrid/EV Energy Storage 9-348
Hydraulic Brake 5-134
Immobilizer 12-4
Instrument Cluster 8-77
Interior Lamps 4-74
Interior Lamps Dimming 4-76
Moveable Window 4-6
Object Detection 12-36
OnStar 8-6
Outside Rearview Mirror 4-203
Park Brake 5-221
Plug-In Charging 9-553
Power Distribution 11-314
Power Moding 11-327
Power Steering System 14-4
Radio/Navigation 8-4
Release Systems 4-221
Remote Function 12-55
Seat Belts 12-82
Shift Lock Control 16-99
SIR 12-101
Schematics (cont'd)
Starting and Charging 9-8
Steering Wheel Secondary/Configurable Control 8-103
Theft Deterrent 12-186
Wiper and Washer Systems 4-287
Schematics RPO Code List 11-313
Scrub Radius Description 15-65
Seal Locations 16-16
Sealers, Adhesives, and Lubricants 15-48
Sealing Strip
Replacement - Rear Door Window Belt Outer 4-48
Sealing Washer Replacement 10-29
Seat Belt
Buckle Replacement - No. 1 Rear 12-95
Does Not Retract - One 12-87
Indicator Circuit Malfunction - Driver 12-87
Indicator Circuit Malfunction - Passenger 12-89
Latch Stop Installation 12-93
Repairs and Inspections Required after a Collision 12-93
System Description and Operation 12-98
Security Indicator
Malfunction 12-188
Sensor Replacement
Tire Pressure Indicator 15-43
Service Port
Valve Core Replacement 10-38
Shift Lock Control
Description and Operation 16-103
Shift Shaft Cover
Installation 16-84
Removal 16-67
Shock Absorber
Replacement 15-22
Shock Absorbers or Struts
On-Vehicle Testing 15-34
Shudder or Vibration During Acceleration 7-4
Side Door Window Mechanical Diagnosis 4-25
Side Window Defogger Outlet
Duct Replacement - Left Side 10-69
Duct Replacement - Right Side 10-70
SIR
Disabling and Enabling 12-151
Service Precautions 12-152
SIR/SRS Wiring Repairs 11-894
Soap Suds or Bubble Test 1-31
Speaker Malfunction 8-49
Speaker Replacement
Rear 8-62
Reference 8-49
Special Tools
12V Starting and Charging 9-37
ABS 5-95
Automatic Transmission 16-96
Cellular, Entertainment, and Navigation 8-73, 8-74
Collision Repair 3-117

Special Tools (cont'd)
Disc Brakes 5-132
Fixed and Moveable Windows 4-54
Front Suspension 15-17
HVAC Systems 10-77
Hybrid/EV Battery Heating and Cooling 9-344
Hybrid/EV Controls 9-197
Hybrid/EV Energy Storage 9-549
Hydraulic Brakes 5-219
Ordering Information 1-28
Park Brake 5-269
Plug-In Charging 9-658
Power Outlets 11-250
Power Steering System 14-23
Programming and Setup 6-19
Rear Suspension 15-27
SIR 12-184
Squeaks and Rattles 1-35
Steering Wheel and Column 14-36
Tire Pressure Monitoring 15-47
Transmission Cooling 16-121
Vibration Diagnosis and Correction 1-82
Wheel Drive Shafts 7-17
Wiring Systems and Power Management 11-963
Specifications
Brake Components 5-133
Hydraulic Brake System 5-133
Tires and Wheels 15-48
Speedometer and/or Odometer Malfunction 8-90
Splash Shield
Replacement - Front Compartment 3-119–3-121
Splicing Copper Wire Using Splice Sleeves 11-890
Splicing Inline Harness Diodes 11-894
Splicing Twisted or Shielded Cable 11-893
Sport Mode Indicator Malfunction 9-168
Spring, Strut, and/or Strut Component Replacement 15-15
Squeaks and Rattles 1-34
Stabilizer Shaft
Link Replacement 15-5
Replacement 15-4
Stationary Window
Description 4-53
Waterleak Repair 1-86
Steering
Effort Hard or Too Easy in One or Both Directions 14-13
Poor Return of Steering Wheel 14-11
Wheel Surges/Jerks While Turning 14-12
Steering Angle Sensor
Centering Procedure 5-74
Steering Column
Lower Trim Cover Replacement 14-30
Replacement 14-34
Upper Trim Cover Replacement 14-29
Steering Knuckle
Replacement 15-7
Steering Linkage
Inner Tie Rod Replacement 14-21
Steering Wheel
Airbag Coil Replacement 12-158
Airbag Replacement 12-155
Horn Contact Replacement 4-63
Replacement 14-32
Spoke Lower Cover Replacement 14-33
Steering Wheel and Column
Description and Operation 14-35
Steering Wheel Controls
Description and Operation 8-112
Malfunction 8-110
Stop and Tail Lamp Bulb
Replacement 4-196, 4-197
Stop Lamps
Malfunction 4-164
Strategy Based Diagnosis 6-83
Structure Identification 3-75
Strut Assembly
Removal and Installation 15-13
Sumitomo Connectors 11-928
Sun Load Sensor Replacement 10-144
Sunshade
Replacement 2-60
Supplemental Inflatable Restraint System Description and Operation 12-182
Suspension
Bottoms 15-30
Suspension Shock/Strut Disposal 15-15
Symptom Byte List 6-117
Symptoms
ABS 5-70
Active Grille Air Shutter 3-51
Automatic Transmission 16-25
Bolted Exterior Body Panels and Closures 3-9
Cellular Communication 8-28
Cruise Control 9-43
Data Communications 11-218
Display and Gauges 8-84
Engine Electrical 9-14
Entertainment System 8-28
Fixed and Moveable Windows 4-10
Horns 4-58
HVAC Systems - Automatic 10-129
Hybrid Controls 9-167
Hydraulic Brakes 5-136
Immobilizer 12-24
Lighting 4-141
Mirrors 4-204
Object Detection 12-41
Park Brake 5-244
Power Outlets 11-246
Power Steering System 14-9
Remote Functions 12-66
Seat Belts 12-86
Seat Heating and Cooling 13-29

Symptoms (cont'd)
Secondary and Configurable Customer Controls 8-109
Shift Lock Control 16-102
SIR 12-147
Squeaks and Rattles 1-34
Steering Wheel and Column Tilt 14-24
Suspension General Diagnosis 15-28
Theft Deterrent 12-187
Tire Pressure Monitoring 15-41
Vehicle Access 4-237
Vehicle DTC Information 6-122
Vibration Diagnosis and Correction 1-50
Wheel Drive Shaft 7-3
Wipers/Washer Systems 4-304
System Components
Programming Immobilizer System 12-27

T

Tail and Turn Signal Lamp Bulb
Replacement 4-193, 4-194
Tail Lamp
Pocket Replacement 3-114
Replacement 4-192
Telematics Communication Interface Control Module
Programming and Setup 6-18
Scan Tool Information 6-81
Temperature Versus Resistance 9-198, 16-3
Terminal Position Assurance Locks 11-898
Terminal Removal 11-951
Testing for a Short to Voltage 11-877
Testing for Continuity 11-876
Testing for Electrical Intermittents 11-880
Testing for Intermittent Conditions and Poor Connections 11-877
Testing for Short to Ground 11-877
Testing Ground and Low Reference Circuits 11-876
Theft Deterrent
Control Module Replacement 12-26
Theft Systems
Description and Operation 12-189
Thread Inserts 1-19
Thrust Angles Description 15-65
Tie Rod
End Replacement - Outer - On Vehicle 14-14
Tire
Diagnosis - Irregular or Premature Wear 15-49
Diagnosis - Waddle Complaint 15-49
Inflation Description 15-61
Lead/Pull Correction - Radial 15-50
Mounting and Dismounting 15-56
Repair 15-52
Tire and Wheel
Assembly Balancing - Off-Vehicle 1-59
Assembly Balancing - On-Vehicle 1-63
Assembly Isolation Test 1-58
Assembly Runout Measurement - Off-Vehicle 1-54
Tire and Wheel (cont'd)
Assembly Runout Measurement - On-Vehicle 1-53
Assembly-to-Hub/Axle Flange Match-Mounting 1-64
Balancing 15-56
Inspection 1-52
Runout Specifications 1-36
Tire Pressure Indicator
Sensor Learn 15-44
Tire Pressure Monitor
Description and Operation 15-46
Tire-to-Wheel Match-Mounting (Vectoring) 1-63
Tires and Wheels
General Description 15-60
Removal and Installation 15-51
Toe Adjustment
Front 15-64
Toe Description 15-66
Torque Steer
Description 15-66
Diagnosis 15-30
Tracing Powder or Chalk Test 1-30
Traction Control/Stability Control Indicator
Malfunction 5-71
Training 1-10
Transmission
Component and System Description 16-93
General Description 16-92
General Specifications 16-5
Identification Information 16-92
Indicators and Messages 16-93
Internal Mode Switch Logic 16-5
Overheats 16-105
Replacement 16-45, 16-54
Transmission Case
Cleaning and Inspection 16-73
Transmission Control
Lever Malfunction 16-102
Replacement 16-34
Wiring Harness 16-70
Wiring Harness Installation 16-81
Transmission Cooler
Bypass Valve Replacement 16-113
Transmission Fluid
Drain and Fill 16-42
Level and Condition Check 16-28
Transmission Fluid Auxiliary Cooler
Replacement 16-112
Transmission Fluid Cooler
Bypass Valve Installation 16-91
Bypass Valve Removal 16-60
Flushing and Flow Test 16-106
Hose/Pipe Quick-Connect Fitting Disconnection and Connection 16-115
Inlet Pipe Replacement 16-119
Outlet Pipe Replacement 16-120
Pipe Connector Replacement - Radiator 16-114

Transmission Fluid Filter
Replacement 16-43
Transmission Fluid Pan
Replacement 16-40
Transmission Fluid Pan and Fluid Pump
Installation 16-89
Removal 16-62
Transmission Fluid Pump
Replacement 16-39
Transmission Mount
Replacement - Left Side 16-52
Replacement - Right Side 16-53
Strut Replacement - Rear 16-52
Transmission Rear Mount
Bracket Replacement 16-50
Trim Height
Inspection Procedure 15-35
Specifications 15-28
Trim Panel Replacement
Rear Quarter Lower 2-65
Troubleshooting with a Digital Multimeter 11-873
Troubleshooting with a Test Lamp 11-874
Troubleshooting With an Insulation
Multimeter 9-438
Trunk/Liftgate
Lock Malfunction 4-249
Turn Signal
Switch Replacement 14-31
Turn Signal Lamps and/or Indicators
Malfunction 4-167
Tyco/AMP Connectors 11-930, 11-932, 11-934, 11-935, 11-937, 11-943, 11-945

U

Ultra High Strength Dual Phase Steel 3-116
Ultra High Strength Steel 3-116
Unable to Contact OnStar Call Center 8-51
Underbody Front Air Deflector
Replacement 3-126
Replacement - Left Side 3-127
Replacement - Right Side 3-128
Underbody Rear Air Rear Deflector
Replacement 3-129, 3-130
Underbody Rear Side Rail
Replacement 3-111
Urethane Adhesive
Description 4-54
Using Connector Test Adapters 11-872
Using Fused Jumper Wires 11-874

V

Vehicle Certification, Tire Placard, Anti-Theft, and Service Parts ID Label 1-12
Vehicle Leads/Pulls 15-29
Vehicle ON/OFF Switch Indicator Malfunction - DTC B097C 11-865
Vehicle Stability Control System Switch
Replacement 5-90
Vehicle Will Not Change Power Mode 11-867
Vehicle Yaw Sensor Learn 5-90
Vehicle Zoning Strategy 11-312
Vehicle-to-Vehicle Diagnostic Comparison 1-51
Vehicle, Engine and Transmission ID and VIN Location, Derivative and Usage 1-11
Vibrate Software
Description and Operation 1-81
Vibration 16-32
Vibration Analysis
Hub and/or Axle Input 1-46
Road Testing 1-37, 1-39
Tire and Wheel 1-43
Vibration Diagnosis, Starting Point, and Correction 1-36
Vibration Diagnostic Aids 1-48
Vibration Duplicated, Appears to be Potential Operating Characteristic 1-50
Vibration Duplicated, Component Not Identified 1-49
Vibration Duplicated, Difficult to Isolate/ Balance Component 1-50
Vibration Intermittent or Not Duplicated 1-48
Vibration Theory and Terminology 1-65

W

Wander Description 15-66
Washer
Malfunction 4-301, 4-309
Pump Replacement - Rear 4-326
Pump Replacement - Windshield 4-325
Water Hose Test 1-84
Waterleak
Test Preparation 1-83
Wheel Alignment
Measuring 15-63
Specifications 15-63
Wheel Bearing
Diagnosis 15-34
Hub Replacement - Rear 15-19
Wheel Drive Shaft
Description and Operation 7-16
Inner Joint Inspection 7-16
Wheel Speed Sensor
Replacement - Front 5-84
Replacement - Rear 5-86
Wheel Stud
Replacement 15-12, 15-26
Wheels
Replacement Wheels Description 15-61
Wheels/Vehicle Underbody Component Views 11-406
Window Regulator
Replacement - Rear Door 4-44
Windshield
Garnish Molding Replacement 2-61
Glass Cleaning 4-334
Replacement 4-25

Windshield Defroster
Nozzle Grille Replacement 10-68
Outlet Duct Replacement 10-67
Windshield Upper Reveal Molding
Replacement 4-30
Windshield Washer
Solvent Container Filler Tube
Replacement 4-323
Solvent Container Replacement 4-324
Windshield Washer Nozzle
Hose Replacement 4-320
Replacement 4-321
Windshield Wiper
and Washer Switch Replacement 4-319
Arm Adjustment 4-335
Arm Replacement 4-328
Blade Replacement 4-330
Windshield Wiper (cont'd)
System Malfunction 4-304
System Module Replacement 4-334
Windshield Wiper Motor
Replacement 4-332
Wiper/Washer
System Description and Operation 4-336
Wipers
Arm Replacement - Rear 4-329
Blade Element Cleaning 4-334
Chatter Repair 4-335
Wiring Repairs 11-883

Y

Yazaki Connectors 11-947

BLANK

Helm, Inc.
954

GMP15SEV2